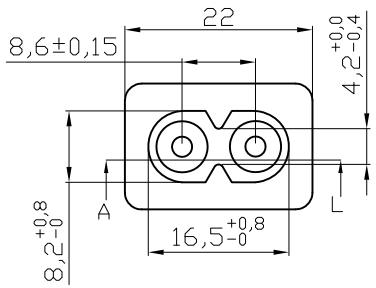

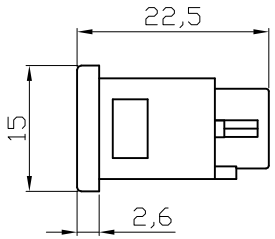

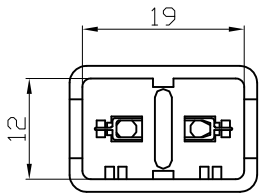

NOTES:

1.Insulator: NYLON 66
2.Soldering: PIN PHOSPHOR BRONZE 0.3x2T TIN PLATING
3.Contact : PIN PHOSPHOR BRONZE ⌀2.36 TIN PLATING
4.Electrical: 2.5A /250V~
5.Approval: UL, CSA, VDE, SEMKO, NEMKO, DEMKO, FIMKO, CCC

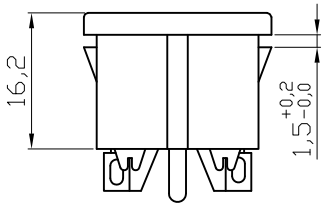

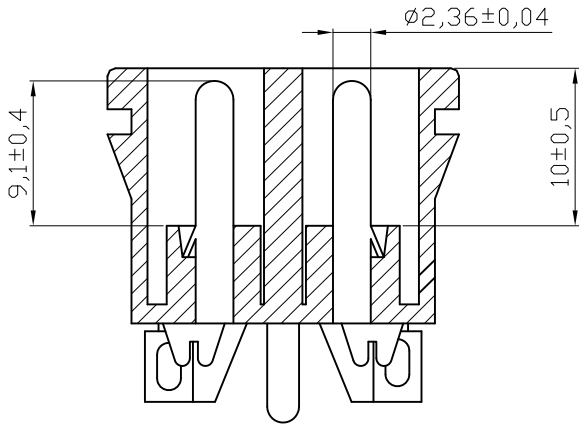

2:1 SECTION. A-L

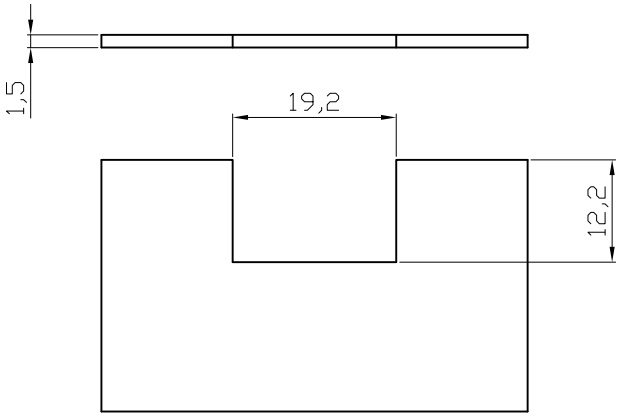

PANEL CUT-OUT

RoHS compliant

Scale	1:1
TOLERANCE	
0-10	±0.1
10-30	±0.3
30-100	±0.5
DIM	TOL
UNIT	mm

Id.	Modification	Date	Name
②	Update	08.07.2009	Dean
①	Drawn	14.12.2007	N.Schulz

	Date	Name
Drawn	14.12.2007	N.Schulz
Approved	08.07.2009	Hellwig

ASSMANN WSW components

Customer-No.

ASSMANN WSW-No. A-8F/SP

Drawing-No. ASS 0889G CO rev02

Replace

SHEET