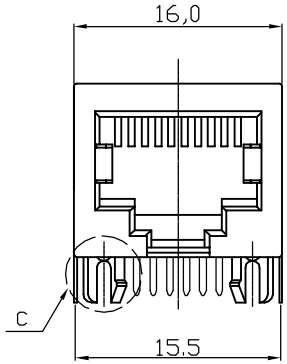

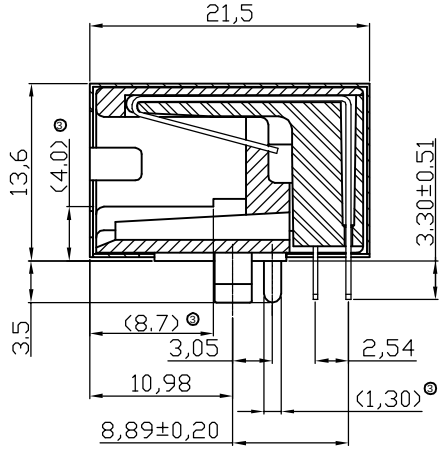

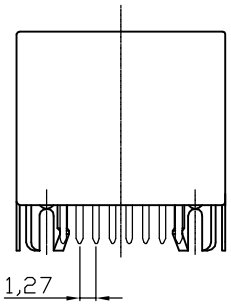

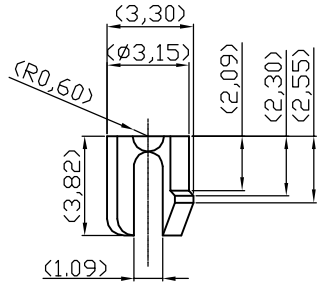

③ DETAIL "C"
SCALE 2:1

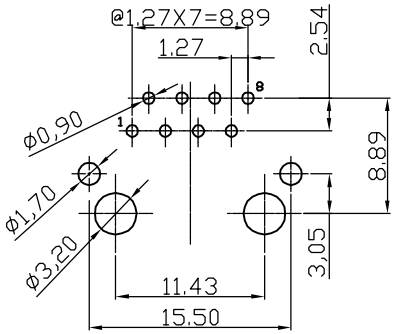

PCB Layout Component Side Shown

NOTES:

ELECTRICAL:

1. VOLTAGE RATING : 125 VAC.
2. CURRENT RATING : 1.5 AMP.
3. CONTACT RESISTANCE : 45 MILLIOHMS MAX.
4. INSULATION RESISTANCE : 1000 MEGOHMS MIN. @ 500 VDC.
5. DIELECTRIC STRENGTH : 1000 VAC 60Hz, 1MIN.

MECHANICAL:

1. HOUSING MATERIAL : HIGH TEMP. UL94V-0.
   : STANDARD COLOR BK. OR YELLOW 114C
2. CONTACT MATERIAL : PHOSPHOR BRONZE t=0.35mm.
3. PLATING : TAILS-100u''~200u''TIN OVER 30u''~80u'' NICKEL. ③
   CONTACTAREA-6U' SELECTIVE GOLD PLATING.
4. SHIELD PLATING : NICKEL PLATING OVER BRASS
5. OPERATING LIFE : 750 CYCLES MIN.
6. PCB RETENTION PRE-SOLDER : 1 LB MIN.
7. PCB RETENTION POST-SOLDER : 10 LBS MIN.

ENVIRONMENTAL:

1. STORAGE TEMPERATURE : -40°C TO +85°C.
2. OPERATION TEMPERATURE : -40°C TO +85°C.
3. WAVE SOLDING TEMPERATURE : 255°C~265°C (5~10 SECONDS)

MATES WITH MODULAR PLUG CONFORMING TO
FCC PART 68, SUBPART F.

RoHS compliant

Unit: mm

File No.: E345352

Scale	Free
TOLERANCE	
.X	±0.20
.XX	±0.15
.XXX	±0.10
DIM	TOL
Angle	±5°

Id.	Modification	Date	Name
③	Modify notes Add dimensions	02.07.2009	Dean
②	Update	05.12.2007	N.Schulz
①	Drawn	07.11.2007	N.Schulz

	Date	Name
Drawn	07.11.2007	N.Schulz
Approved	02.07.2009	Hellwig

ASSMANN WSW components

Customer-No.

ASSMANN WSW-No. A-20042-LP/FS

Drawing-No. ASS 0574 CO

rev03

Replace

SHEET