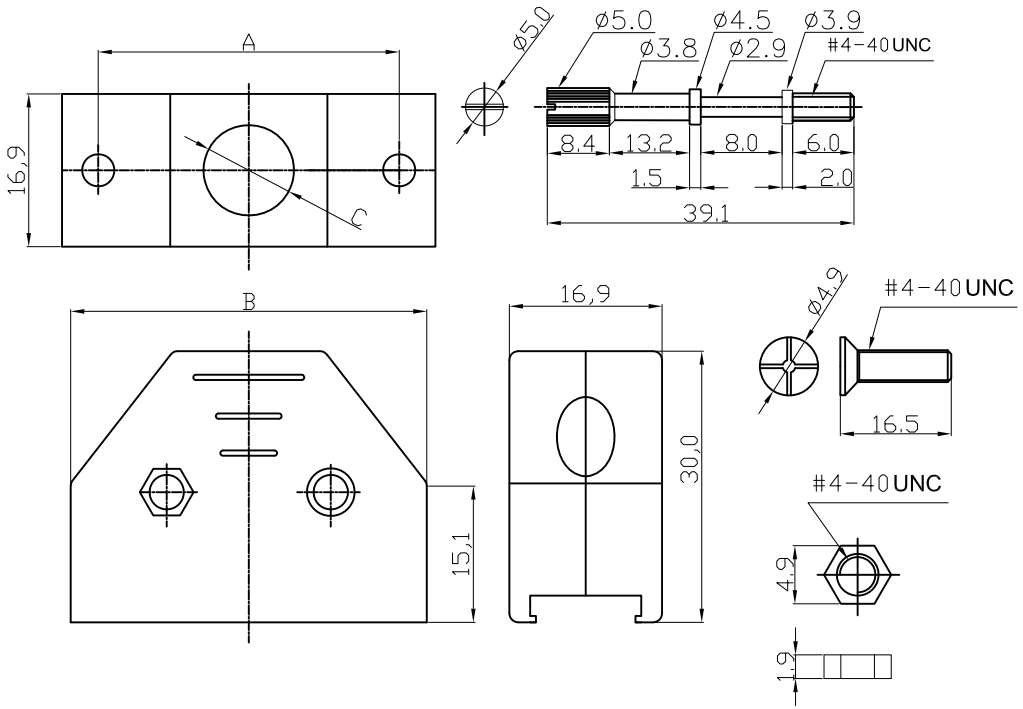

MATERIAL:
INSULATOR : ABS UL94HB
SCREW: STEEL
FINISHED : CHROMATE PLATED

Order Code

AKSUN xx x - T
1 2

1 **No. of contacts**
09.15

2 **Version**
S -Plastic,black
V -Metallized

	Dimensions		
No.of contacts	A	B	C
09	24.99	31.5	ø8.0
15	33.3	39.4	ø10.0

PACKLIST : 09 contacts
1,000 SET/CTN NW:17.0KG GW:18.0KG CUFT:1.40'
15 contacts
1,000 SET/CTN NW:18.0KG GW:19.0KG CUFT:1.51'

RoHS compliant

Scale	1:1					Date	Name	Customer-No.
TOLERANCE					Drawn	12.01.2005	Ken	
X.	±0.5				Approved	26.06.2009	Hellwig	ASSMANN WSW-No. AKSUN 09 x-T AKSUN 15 x-T
X.X	±0.3							
X.XX	±0.2							
DIM	TOL	②	Update	26.06.2009	Dean			Drawing-No. ASS 0826 CO rev02
Angle	±5°	①	Drawn	12.01.2005	Ken			
		Id.	Modification	Date	Name			Replace Sheet

ASSMANN WSW components