## Type 1

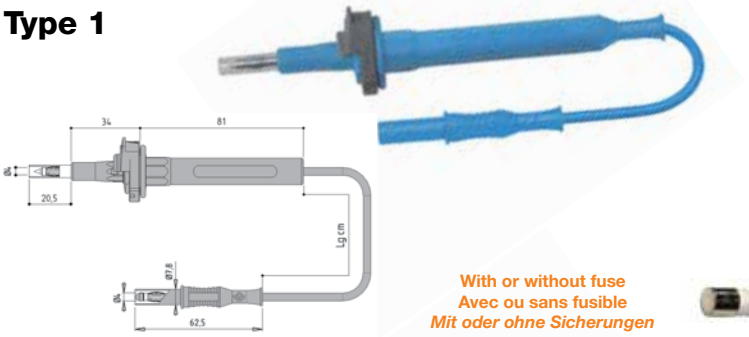


With or without fuse
Avec ou sans fusible
*Mit oder ohne Sicherungen*

## Type 2

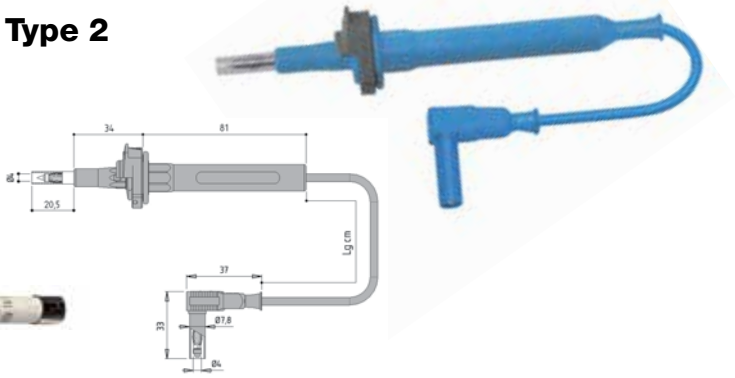


## Type 3

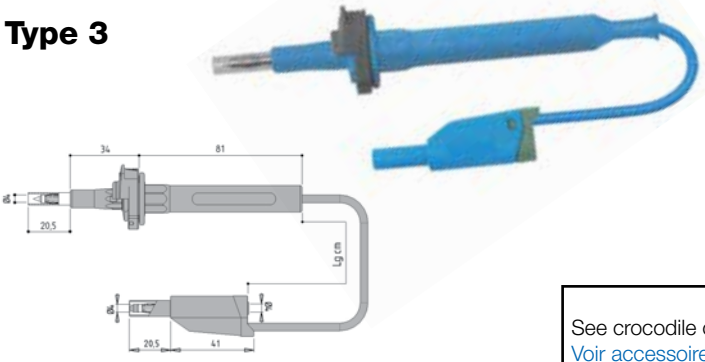


Locking Sleeve
Fourreau verrouillable
*Riegelbar Schutzrohr Entsprechend*

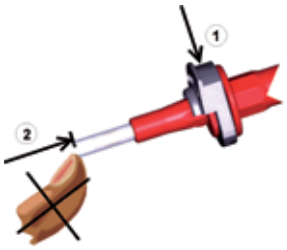


See crocodile clip accessory page 63 (P/N 4766/LM-FUSE)
Voir accessoire pince crocodile page 63 (Réf. 4766/LM-FUSE)
*Sehe Zubehör Krokodilklemmen Seite 63 (Ref.* 4766/LM-FUSE)

| Type | | Reference<br>Référence<br>*Bestell-Nr* | L<br>cm | Wire<br>Câble<br>*Litze* | Max current<br>I admissible<br>*Bemessungs-strom* | Voltage<br>Tension<br>*Bemessungs-spannung* | m Ω<br>maxi | Pack |
|---|---|---|---|---|---|---|---|---|
| 1 | NOT FUSED | 5930-IEC-120-# | 120 | PVC 0,75 mm² | 12 A | 1000 V CAT III | | 5 |
| | | 5931-IEC-120-# | | Silicone 0,75 mm² | | | | |
| | | 5932-IEC-120-# | | PVC 1,00 mm² | 20 A | | 22 | |
| | | 5939-IEC-120-# | | Silicone 1,00 mm² | | | | |
| | FUSED | 5930IEC0,5A1kV120-# | | PVC 0,75 mm² | 12 A (fuse : 500 mA) | 1000 V CAT III | 1400 | |
| | | 5930IEC0,5A660V120-# | | | | 1000 V CAT III (fuse : 660 V) | | |
| | | 5930IEC10A600V120-# | | | 12 A (fuse : 10 A) | 1000 V CAT III (fuse : 600 V) | 50 | |
| 2 | NOT FUSED | 5940-IEC-120-# | | PVC 0,75 mm² | 12 A | 1000 V CAT III | | 5 |
| | | 5941-IEC-120-# | | Silicone 0,75 mm² | | | | |
| | | 5942-IEC-120-# | | PVC 1,00 mm² | 20 A | | 22 | |
| | | 5949-IEC-120-# | | Silicone 1,00 mm² | | | | |
| | FUSED | 5940IEC0,5A1kV120-# | | PVC 0,75 mm² | 12 A (fuse : 500 mA) | 1000 V CAT III | 1400 | |
| | | 5940IEC0,5A660V120-# | | | | 1000 V CAT III (fuse : 660 V) | | |
| | | 5940IEC10A600V120-# | | | 12 A (fuse : 10 A) | 1000 V CAT III (fuse : 600 V) | 50 | |
| 3 | NOT FUSED | 5970-IEC-120-# | | PVC 0,75 mm² | 12 A | 1000 V CAT III | | 5 |
| | | 5971-IEC-120-# | | Silicone 0,75 mm² | | | | |
| | | 5972-IEC-120-# | | PVC 1,00 mm² | 20 A | | 22 | |
| | | 5979-IEC-120-# | | Silicone 1,00 mm² | | | | |
| | FUSED | 5970IEC0,5A1kV120-# | | PVC 0,75 mm² | 12 A (fuse : 500 mA) | 1000 V CAT III | 1400 | |
| | | 5970IEC0,5A660V120-# | | | | 1000 V CAT III (fuse : 660 V) | | |
| | | 5970IEC10A600V120-# | | | 12 A (fuse : 10 A) | 1000 V CAT III (fuse : 600 V) | 50 | |
| FUSE | | Fuse 10A600V/50kA<br>Fuse 0,5A660V/30kA<br>Fuse 0,5A1kV/50kA | | | | | | 10 |

| Colours<br>Couleurs<br>*Farben*<br># | R | N | Bl | Bc | V | Bn | J |
|---|---|---|---|---|---|---|---|
| | Red - Rouge - *Rot* | Black - Noir - *Schwarz* | Blue – Bleu – *Blau* | White – Blanc – *Weiss* | Green – Vert – *Grün* | Brown – Brun – *Braun* | Yellow – Jaune – *Gelb* |
| | 2 | 0 | 6 | 9 | 5 | 1 | 4 |