ROSE

A Phoenix Mecano Company



OPERATING AND DISPLAY ENCLOSURES

L'IMPULSION

Retrouvez nous sur
www.limpulsion.fr

www.rose-systemtechnik.com

ROSE Systemtechnik GmbH



In 1969 ROSE Systemtechnik GmbH was founded in Porta Westfalica, Germany. Today ROSE is one of the world's leading and innovative providers of industrial enclosure system engineering, employing over 350 people at the German headquarter.

In association with Phoenix Mecano AG, Switzerland, we develop and manufacture high-quality industrial enclosures and system solutions for areas such as mechanical and plant engineering, automation engineering, potentially explosive atmospheres, instrumentation, control and automation technology, as well as the foodstuff and beverage industry.

Our product range comprises the following:

- Standard industrial enclosures made of aluminium, stainless steel and plastics for individual installations of electrical connection technology and electronic components.
- Operating and display enclosures based on aluminium profile systems and stainless steel materials for HMI applications with industrial PCs, PLC control systems and visualization units, including suspension systems.
- Components for explosion protection with junction boxes and control stations for worldwide use in potentially explosive atmospheres, as well as the petrochemical and chemical industry in both onshore and offshore environments.

Our business success is based on a wide range of products, a high quality standard, constant innovation and an exceptional level of service. You decide the condition of delivery – the un-machined enclosure, a partial assembly or a completely assembled and tested customized system solution.

Take advantage of our worldwide sales and marketing network for your international projects.



Due to their variable profile structure, ROSE operating and display enclosures are flexible in terms of height and width.
A wide selection of different profile depths offers the required space for your installations.
ROSE suspension systems made of aluminium profile offer the same flexibility.
They are available in both standard and customised lengths.
Your benefit: we provide you with your customized solution starting at 1 item - quick, cost effective and reliable.

You decide what we can do for you!
We offer you all the options – from individual components, to completely assembled and fitted combinations of operating enclosures and suspension systems.
Individual Executions based on your CI concept are no problem for us.
We would be pleased to support you - starting with the design up to the complete system, including testing and approval.

Our operating and display enclosures and suspension systems correspond to the current state of technology. Furthermore, our operating enclosures show all necessary approvals including UL approval for use in the US. Our enclosures are listed in almost all operating equipment regulations of renowned automotive manufacturers both within Germany and wordwide.







L'IMPULSION
Retrouvez nous sur
www.limpulsion.fr

Content

		Page
	**SL 5000** The new flexible and modular control enclosure	10
	**SL 4000** Control enclosure system for automation engineering	15
	**SL 3000** Universal control enclosure system for automation technology	26
	**SL 2000** Enclosure system for control and display fittings	35
	**ComTronic** Aluminium profile compact Commander	40
	**Commander 1** Small control enclosure system made of diecast aluminium	46
	**Commander 1F** Small control enclosure system in aluminium with front frame for front panels and keypads	52
	**Commander KSSC** Stainless steel control enclosure	57
	**Commander 410** Stainless steel control enclosure	59

		Page
	**Commander 420** Stainless steel control enclosure for industrial areas	61
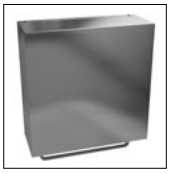	**Commander 450** Stainless steel control enclosure for industrial areas	63
	**Commander system accessories** Components for operating enclosures	65
	**Heat management** Climatic systems for Commander	77
	**GTK electronic** Suspension system with free accessible cable channel for low loads	82
	**GTS** Aluminium suspension system for low and middle loads	89
	**GTN II** Aluminium suspension system with closed or freely accessible cable duct for middle and heavy loads	99
	**GTL** Heavy load suspension system	113
	**Flat Panel Adapter** Addition to suspension systems	119

Technical modifications reserve!

L'IMPULSION
Retrouvez nous sur
www.limpulsion.fr

Content

		Page
	**GTV light** Height adjustment system	123
	**GTV 2.0** Height adjustment system	126
	**GTH 48 / GTH 60** **GTH 48 easy / GTH 60 easy** Stainless steel round tube system with system components	130 137
	**GT 48/2** Industrial round tube suspension system	144
	**GT 50/2, GT 60/2, GT 80/2** Industrial square tube suspension system	152
	**GTK 80** Industrial square suspension system with free accessible cable channel for heavy control and display equipment	160
	**Moterm I + II** Mobile stand system for control components	166
	**Inclining adapter** Inclining adapter for individual connections between enclosures and ROSE suspension systems or for wall mounting	174
	**Limanda** Polyamide handheld enclosure system for MCR, automation technology and data acquisition	178

		Page
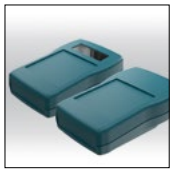	**Taguan 130** ABS hand held enclosure for data acquisition and instrumentation	182
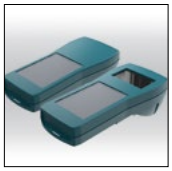	**Taguan 180/230** ABS hand held enclosure for data acquisition and instrumentation	187
	**Beluga 180/220** Polyamide hand held enclosure for MCR- and automation engineering	193
	**Beluga 380** Polyamide hand held enclosure for MCR- and automation engineering	197
	**Pilot 250** Polyamide hand held enclosure for MCR- and automation engineering	200
	**Pilot 50** Polyamide/PVC hand held enclosure for MCR- and automation engineering	203
	**Pilot 10/20/30** Hand held enclosure for MCR- and automation engineering	207
	**Pilot 110-150** Polyamide hand held enclosure for automation and control engineering	210
	**Electro-mechanical components**	214

General technical information

Enclosure selection criteria

Enclosures are generally required to protect the installed equipment from external hazards.
These hazards can be varied in nature and are of decisive significance when determining the criteria for the choice of an enclosure.
Essential for appraising whether an enclosure meets safety requirements is a precise definition of the hazards expected at an installation location. The most important conditions to consider are the following:

1. Protection against contact and penetration of foreign bodies
2. Protection against water penetration
3. Protection against internal and external radio interference
4. Chemical resistance
5. Temperature stability
6. Impact resistance
7. Corrosion resistance

Enclosure ratings
ROSE enclosures are classified in enclosure rating in accordance with the generally applicable guidelines contained in EN 60529 and IEC 144.
The enclosure rating is indicated by an abbreviation, which is always composed of the two letters IP and two digits relating to the protection level.

Protection class for contact and foreign bodies protection

First digit	Designation
0	No protection
1	Protection against large foreign bodies
2	Protection against medium-sized foreign bodies
3	Protection against small foreign bodies
4	Protection against granular foreign bodies
5	Protection against dust deposits
6	Protection against dust entry

Water protection class

Second digit	Designation
0	No protection
1	Protection against vertical falling drip water
2	Protection against obliquely falling drip water
3	Protection against water spray
4	Protection against splashing water
5	Protection against water jets
6	Protection when flooded
7	Protection when immersed
8	Protection when submerged

Note: The enclosure ratings given apply to unmodified enclosures as supplied. Wear and tear and temperature fluctuations may lead to a reduction in the enclosure rating.

Temperature stability
The definition of temperature stability for enclosures is based on the maximum continuous temperature at which the enclosure remains dimensionally stable and the enclosure rating remains guaranteed. The permissible brief peak temperatures are often considerably higher.

Corrosion resistance of aluminium enclosures
The corrosion resistance of aluminium enclosures is rated as good, even without special surface treatment. The use of special aluminium alloys with low copper content increases the corrosion resistance.
Additional treatments including
- chromating
- lacquering (powder coating) and
- the combination of chromating and lacquering

further increase corrosion resistance.

We offer the following for critical external areas:
SWB Execution (seawater-resistant):
Purifed - chromated - powder-coated
Standard colour RAL 5009, other colours on request.

For aplication areas with extreme UV radiation we recommend coating with a special Polyester powder.
SBG/SBGL Execution only for wet painting processes
SBG = Purified - alodine-primed
SBGL = Purified - alodine-primed - painted

General technical information

Chemical resistance enclosure materials

Chemicals	Aluminium	Stainless steel	Polycarbonate	Polyester	Polystyrene	Polyamide
Acetone	+	+	-	-	-	•
Formic acid	•	+	30 %	10 %	•	-
Ammonia	+	+	-	-	+	20 %
Petrol	+	+	•	+	•	+
Benzene	+	+	-	+	-	-
Brake fluid	/	/	-	+	/	60°
Butane	+	/	+	/	-	+
Butanol	/	/	/	+	/	+
Calcium chloride	+	+	+	+	+	+
Chloral benzene	+	/	-	+	-	•
Diesel öoil	/	/	•	+	•	/
Vinegar	+	+	10 %	40 %	+ max. 50 %	-
Formaldehyde	+	+	/	30 %	+ max. 40 %	+
Freon 113	/	/	+	+	/	/
Fruit juice	/	+	+	+	/	+
Glycerine	+	+	•	+	+	+
Fuel oil	+	+	•	+	•	+
Hydraulic oil	/	/	+	+	•	+
Caustic potash solution	/	+	-	-	+ max. 50 %	-
Potassium chloride	•	+	+	+	+	+
Potassium hydroxide	-	+	/	-	+	/
Linseed oil	+	+	+	+	+	+
Methane	+	+	-	-	+	•
Methylene chloride	+	+	-	-	-	-
Lactic acid	+	+	10 %	+	+ max. 80 %	10 %
Mineral oils	/	/	+	+	+	+
Motor oils	/	/	+	+	+	+
Sodium carbonate	•	+	+	+	+	+
Sodium chloride	•	•	+	+	+	10 %
Sodium hydroxide	+	+	/	-	/	/
Soda lye	/	+	-	40 %	+ max. 50 %	10 %
Nitric acid	+	+	10 %	10 %	+ max. 25 %	-
Hydrochloric acid	/	+	20 %	+	+ max. 10 %	-
Lubricating oil	+	+	+	+	/	+
Carbon toulphide	+	+	-	-	-	•
Sulphuric acid	•	+	50 %	70 %	+ max. 50 %	-
Suds	/	+	•	+	/	+
Cleansing agent	/	+	+	/	/	/
Terpentine oil	/	/	/	+	-	+
Carbon tetrachloride	+	/	/	+	-	•
Toluene	+	/	-	+	-	+
Trichlorethylene	+	/	/	-	-	-
Water (dest. water, river-, mains-, sea water)	/	+	+	+	+	+
Tartaric acid	/	/	10 %	+	+	+
Xylene	+	/	-	+	-	+
Zinc sulfate	•	/	+	+	+	/
Citric acid	+	/	10 %	+	+	10 %

The investigations, unless stated otherwise, were carried out at room temperature. Resistances can vary when two different materials come into contact with one another. We cannot therefore accept liability for this data.

Explanation of symbols

+ resistant to all concentrations
% resistant against maximum % concentration
C° resistant to maximum C°
• limited resistance
- not resistant
/ no information

General technical information

Chemical resistance enclosure seals and accessories

Chemicals	Chloroprene	EPDM	NBR	Pocane	Polyure-thane	PVC	Silicone
Acetone	+	+	-	+	-	-	•
Formic acid	+	+	-	10 %	/	< 50 %	•
Ammonia	+	+	+	10 %	/	•	+
Petrol	+	•	+	+	+	+	+
Benzene	-	-	-	+	+	-	-
Brake fluid	•	-	/	+	/	/	+
Butane	+	/	+	+	/	50 %	-
Butanol	+	/	-	+	/	•	-
Calcium chloride	/	/	/	10 %	/	+	/
Chloral benzene	-	-	-	-	-	-	-
Diesel oil	•	•	/	+	+	•	•
Vinegar	-	/	-	10 %	/	25 %	-
Formaldehyde	-	/	+	/	/	40 %	+
Freon 113	+	/	+	+	/	/	/
Fruit juice	+	+	/	+	+	+	+
Glycerine	+	+	+	+	+	+	+
Fuel oil	•	•	+	+	+	•	•
Hydraulic oil	+	/	/	+	/	/	•
Caustic potash solution	+	/	/	10 %	/	+	/
Potassium chloride	+	+	+	10 %	+	+	+
Potassium hydroxide	+	+	+	-	-	/	•
Linseed oil	+	+	+	+	+	+	•
Methane	+	/	•	+	/	/	+
Methylene chloride	-	/	-	-	-	-	-
Lactic acid	+	+	+	/	/	10 %	/
Mineral oils	•	•	+	+	+	+	+
Motor oils	•	•	+	+	+	/	+
Sodium carbonate	/	/	/	10 %	/	/	/
Sodium chloride	+	+	+	10 %	+	+	+
Sodium hydroxide	+	+	•	-	-	•	•
Soda lye	50 %	/	-	/	/	60 %	-
Nitric acid	•	+	•	10 %	-	30 %	-
Hydrochloric acid	+	+	< 65 % •	10 %	-	30 %	/
Lubricating oil	•	•	+	+	+	+	+
Carbon toulphide	-	/	-	+	/	•	-
Sulphuric acid	50 %	/	25 %	10 %	/	80 %	25 %
Suds	+	/	+	10 %	•	•	+
Cleansing agent	+	•	/	+	•	/	+
Terpentine oil	-	/	+	+	/	+	-
Carbon tetrachloride	-	-	-	+	-	•	-
Toluene	-	-	-	•	-	-	-
Trichlorethylene	-	-	-	•	-	-	-
Water (dest. water, river-, mains-, sea water)	+	+	80 C°	+	+	40 C°	+
Tartaric acid	+	+	+	/	+	10 %	+
Xylene	-	-	-	•	-	-	-
Zinc sulfate	+	+	+	/	/	40 %	+
Citric acid	+	+	+	10 %	/	10 %	+

The investigations, unless stated otherwise, were carried out at room temperature. Resistances can vary when two different materials come into contact with one another. We cannot therefore accept liability for this data.

Explanation of symbols

+ resistant to all concentrations
% resistant against maximum % concentration
C° resistant to maximum C°
• limited resistance
- not resistant
/ no information

Enclosure and EMC

General

In electronic engineering, enclosures are required to fulfil two tasks:

- to protect equipment against external mechanical hazards and radio interference
- to protect the environment against mechanical and electrical hazards or radio interference caused by equipment

Electromagnetic compatibility (EMC) is becoming an increasingly important factor in the choice of enclosures due to sustained advances in the development of electronic components and increased density of components on circuit boards - this being connected with increased emission of electromagnetic radio interference into the environment.

Statutory regulations

The Electromagnetic Compatibility guidlineAct (EMC) had been revised on 14 December 2016 and transposes the 2014/30/EU Directive on electromagnetic compatibility into German law.
The law applies to equipment that can cause electromagnetic interference or whose operation can be impaired by electromagnetic interference.
According to § 4 - Basic requirements - these equipment must be designed and manufactured in accordance with the generally recognised rules of technology in such a way that the following two conditions are met: Firstly, the electromagnetic disturbances caused by the equipment must not render the operation of other equipment impossible. Secondly, the equipment itself must be sufficiently insensitive to interference from other equipment.

Enclosure requirements

Enclosures in themselves are not covered by the EMC legislation as they are not by definition electrical or electronic devices.
Enclosures are however largely responsible for the
strength of radiation emissions and/or interference (outgoing or incoming interference) of a device.
The enclosure material is also a decisive factor in the screening effect, which is the combined reflection and absorption damping properties of an enclosure.

Plastics alone have no filtering effect in the case of radio interference. Screening characteristics can be achieved with additional expensive treatments (metal vaporisation or the application of a conductive coating).

Metal enclosures on the other hand offer a highly effective basic protection against radio interference without any further treatment. Large surface area contact of individual enclosure parts (cover, enclosure sections) is an important factor in this.

Where special safety requirements exist, EMC compatibility can be increased by
- conductive seals,
- contact-uninsulated ends and
- EMC-compliant cable connections.

SL 5000



+ Modern enclosure system for all standard control and display installations
+ Four profile sizes enable a wide range of applications and enclosure depths in combination or individually
+ Flexible size variability in height and width
+ Easy-to-assemble and user-friendly door hinge and locking system
+ Optionally as front or rear door version

Due to its modern design, the SL5000 clearly stands out from previous control housings and is convincing nevertheless due to its high flexibility and modularity. Four different profiles in combination allow a wide variety of applications and profile depths - optionally as a front or rear door version.
The contour of the profiles offer a very high rigidity, whereby different dimensions in height and width can be realized.

The front can be designed as a classic front panel or as a combination with dividers.
The high degree of protection, individual colouring and mechanical processing round off the SL5000.

Technical Data

Material	Aluminium
Surface	powder coated
Colour	RAL7035 / Individual colouring
Dimensions	Variable dimensions up to 700x700 mm (WxH). Other dimensions on request
Protection class	IP 54 acc. to EN 60529
Gasket	CR-round cord
Temperature application area	-30 °C to +80 °C
Support arm connection	Rear wall / Side A/B

+ Individual colouring possible
+ Integration of buttons
+ 4 different profiles
+ Individual processing of the sides / front and back wall
+ Long-term availability
+ High degree of protection
+ High flexibility
+ Integration into existing suspension systems

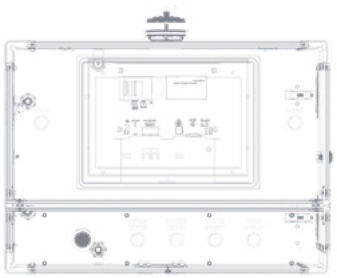

Installation depths

Single profile	Installation depth
Profile 47	39,8 mm
Profile 62	54,5 mm
Profile 95	87,5 mm
Profile 139	131,5 mm

Carrier Connection

	Flat Panel Adapter	GTS	GT 48/2	GTN II	Moterm
Profile 47	✓				
Profile 62	✓				✓*
Profile 95	✓	✓	✓		✓*
Profile 139	✓	✓	✓	✓	✓*

*Only possible with a width smaller 600 mm.

The connection to our device carrier systems / third-party systems depends on the selected profiles of the SL5000. For example, the smallest profile depths can only be connected via the rear wall, since the couplings of the device carrier systems do not offer enough space on side A/B. Individual processing for third-party systems/VESA is possible but must be checked!

Combinations

Profile combination	Installation depths	Carrier Connection	Opening profile combination
47 + 62	102,5 mm	Rear wall	front
47 + 95	135,5 mm	95	front
47 + 139	179,5 mm	139	front
62 + 47	102,5 mm	Rear wall	front
62 + 62	117,2 mm	Rear wall	front
62 + 95	150,2 mm	95	front
62 + 139	194,2 mm	139	front
95 + 47	135,5 mm	95	at the back
95 + 62	150,2 mm	95	at the back
95 + 95	183,2 mm	95	front/at the back
95 + 139	227,2 mm	139	front
139 + 47	179,5 mm	139	at the back
139 + 62	194,2 mm	139	at the back
139 + 95	227,2 mm	139	at the back

+ Front panel / Back

The front panel and the rear panel are made of aluminium with a thickness of 3 mm.

The front panel and rear panel can be screwed or hinged. This depends on the profile depth and the appliance support connection.

For hinged profile combinations, a screwed rear panel and front panel must be selected for stability reasons!

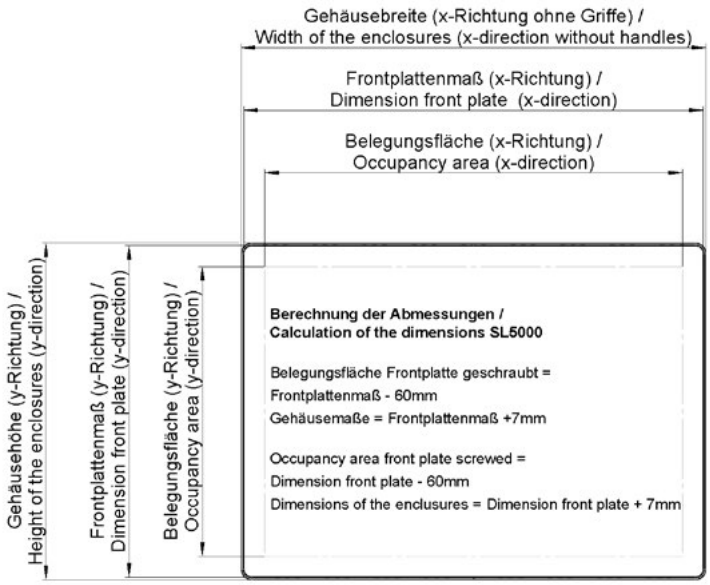

+ Highlights

Enjoy a variable control enclosure with a variety of assembly possibilities:



Optional accessories, i.e. external handles or signal light



Horizontal divider and individual colouring



Vertical divider



Hinged front panel



Hinged rear wall



Profile combinations to increase the installation depth or as a front door as well as in individual dimensions & designs possible

+ Connection Options

The SL 5000 system housings can be connected to the entire ROSE support arm portfolio in a variety of ways. In addition to the practical flat panel adapter, numerous rotatable, tiltable and height-adjustable adapters are available that can be combined with the support profiles to form a support arm that perfectly matches your application.

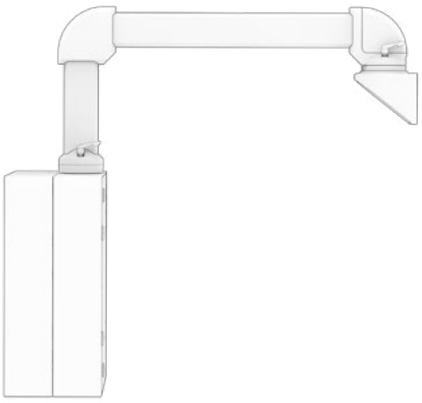

Support arm - hanging

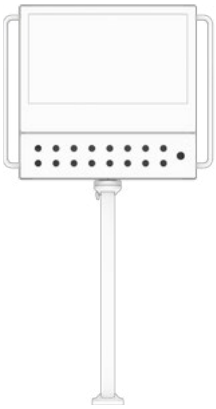

Standing pillar model

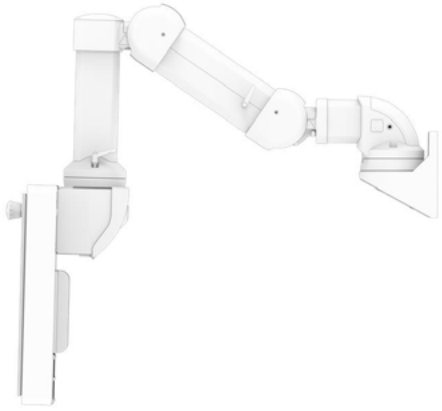

Height-adjustable support arm
(light to medium loads)
Ergonomic connection via GTV Light



Height-adjustable support arm
(heavy loads)
Ergonomic connection via GTV 2.0

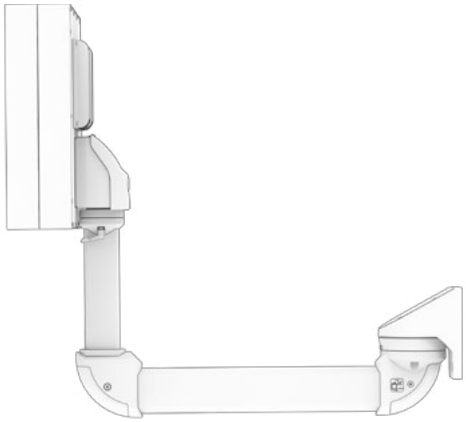

Support arm - standing

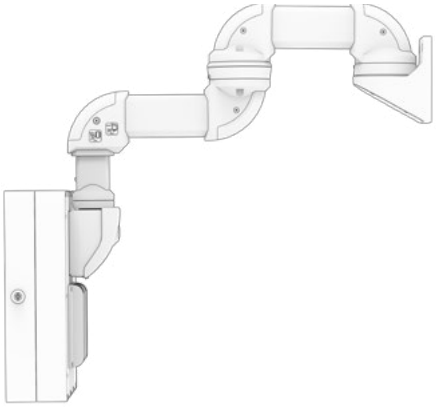

Support arm - hanging
with intermediate joint

+ Application Examples

Regardless of the requirements you previously had on a control housing - with the new SL 5000, implementation is a lot easier and the result is significantly more individual. In addition to the practical divider, which can be arranged both vertically and horizontally, there are options such as individual colour design for all housing components. In addition, your finished solution will benefit from the simple, timelessly elegant design without classic corner pieces.



- Profile combination of profile 47 & 95 with an enclosure depth of approx. 140mm
- Hinged design with front opening
- Separate aluminium front panel with vertical divider in special colour
- Screwed rear panel & front panel
- Connection of GTS support arm system to side A



- Profile 139 with a enclosure depth of approx. 140 mm
- Separate operating enclosure with aluminium front panel & button integration
- Display enclosure with aluminium front panel & integrated panel PC
- Screwed front panel & hinged rear wall
- GTN II stand system connection on side B



- S-Line Gen. 5 with SL5000 profile 47 and an enclosure depth of approx. 40 mm
- Laterally offset extension box with aluminium front panel & button integration
- Connection of flat panel adapter to rear wall



- Profile 139 with an enclosure depth of approx. 140 mm
- Continuous aluminium front panel with button integration and additional button labelling as well as built-in panel PC
- Screwed front panel & hinged rear wall
- GTN II stand system connection on side A

SL 4000



c UL us LISTED

+ Modern enclosure system for control and display systems
+ Flexible size variability in height and width with 6 enclosure profiles
+ Easy mounting of door hinge
+ Integrated handle system

Included in delivery
Complete enclosure system incl. corners, seals, fixing elements, rear panel or door, front panel fixing set.

Technical data

Material	Profile: DIN EN 573 EN AW-AlMgSi Cast corner: DIN EN AC-AlSi 12 Cu 1 (Fe)
Painting	Powder coating or natural anodized
Colour	Profile: optional RAL 7035 or natural anodized, Corner element: optional RAL 7035, light grey or RAL 9007, grey aluminium special colour on request
Ingress protection	IP 65 to EN 60529
Temperature range	-30 °C to +80 °C

SL 4000

Profile connecting Executions

fixed





hinged





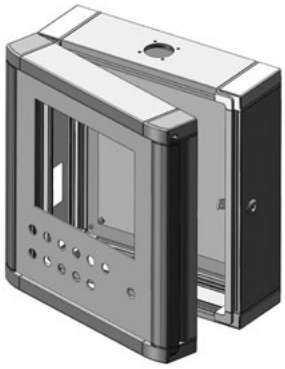

Possible combinations

Profile single	Combinations with hinge	Combinations fixed
Profile 1 (Mounting depth = 80 mm)	P 1 + 4 (Mounting depth = 220 mm) door front	P 1 + 4 (Mounting depth = 220 mm)
Profile 2 (Mounting depth = 130 mm)	P 2 + 4 (Mounting depth = 270 mm) door front	P 2 + 4 (Mounting depth = 270 mm)
Profile 3 (Mounting depth = 190 mm)	P 5 + 6 (Mounting depth = 135 mm) door front	P 5 + 6 (Mounting depth = 135 mm)
Profile 5 (Mounting depth = 55 mm)	P 1 + 6 (Mounting depth = 160 mm) door front	P 1 + 6 (Mounting depth = 160 mm)
	P 2 + 6 (Mounting depth = 210 mm) door rear	P 2 + 6 (Mounting depth = 210 mm)
	P 5 + 4 (Mounting depth = 195 mm) door front	P 5 + 4 (Mounting depth = 195 mm)
	P 3 + 6 (Mounting depth = 270 mm) door rear – on request	P 3 + 6 (Mounting depth = 270 mm)

Front plate fitting

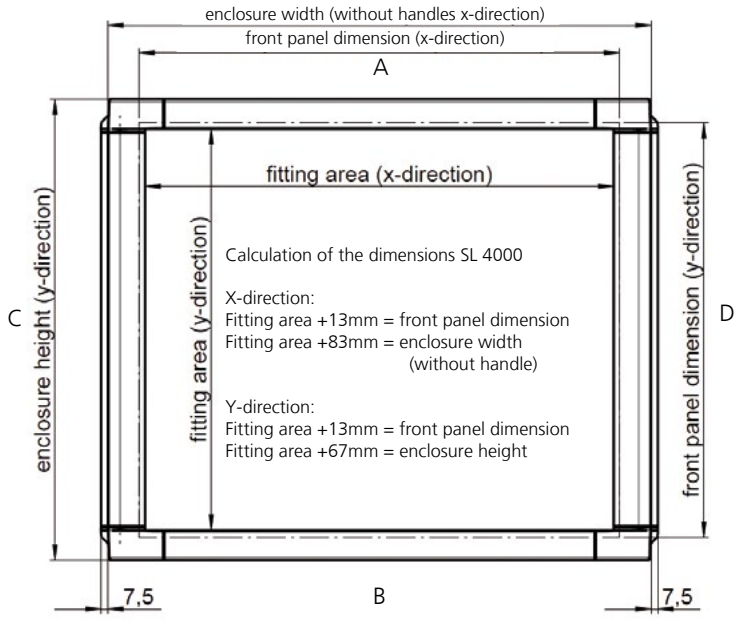

Front plate mounting

Front panel is mounted from inside. Quick and easy installation
with four clamping bars.

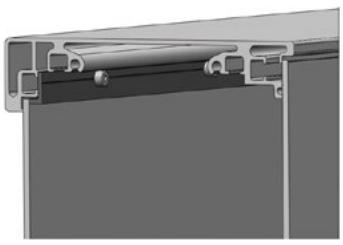

Product range

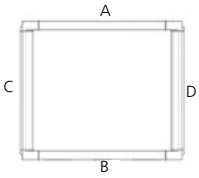

Overview profile depth

Basic profile

Profile 5 Handle profile Side C/D

External dimensions 65/70 mm
Mounting depth 55 mm



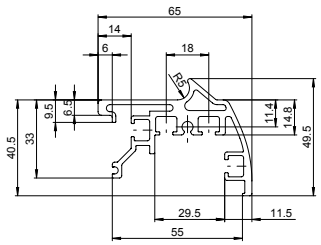

Profile 5 Body profile Side A/B

External dimensions 65/70 mm
Mounting depth 55 mm



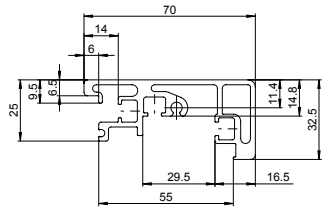

Profile 1 Handle profile 90 Side C/D

External dimensions 90/95 mm
Mounting depth 80 mm



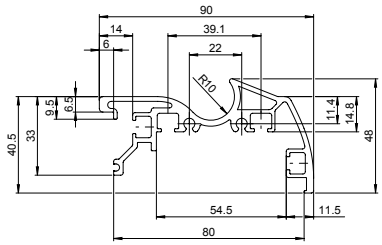

Profile 1 Body profile 90 Side A/B

External dimensions 90/95 mm
Mounting depth 80 mm



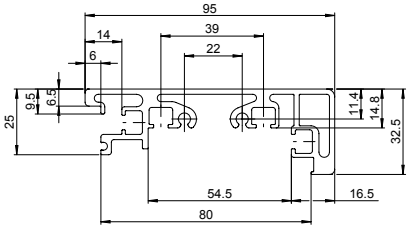

Profile 2 Handle profile 140 Side C/D

External dimensions 140/145 mm
Mounting depth 130 mm



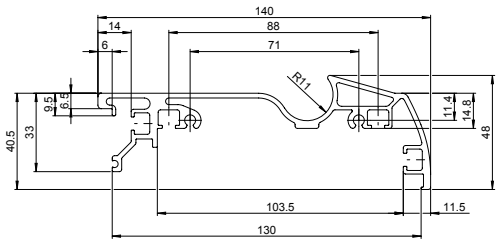

Profile 2 Body profile 140 Side A/B

External dimensions 140/145 mm
Mounting depth 130 mm



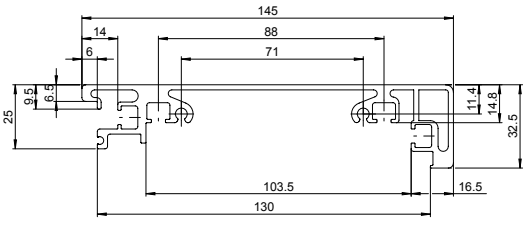

SL 4000

Basic profile

Profile 3 Handle profile 200 Side C/D

External dimensions 200/205 mm
Mounting depth 190 mm



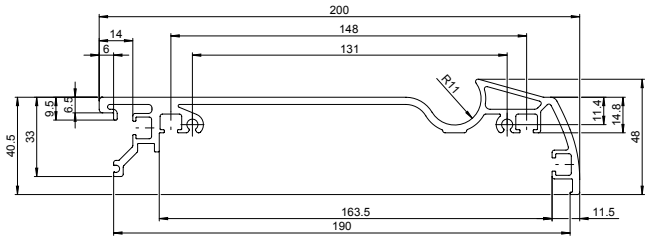

Profile 3 Body profile 200 Side A/B

External dimensions 200/205 mm
Mounting depth 190 mm



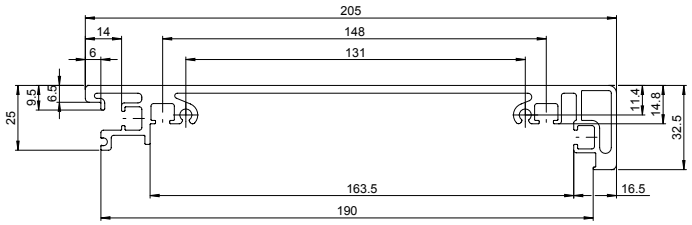

Combination profile

Profile 6 Side C/D

External dimensions 85,5 mm
Mounting depth 80 mm



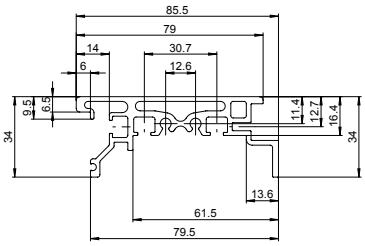

Profile 6 Side A/B

External dimensions 85,5 mm
Mounting depth 80 mm



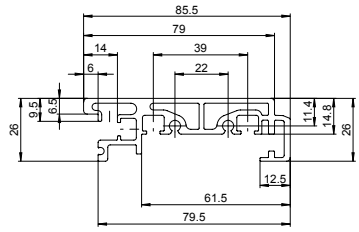

Profile 4 Side C/D

External dimensions 153 mm
Mounting depth 140 mm



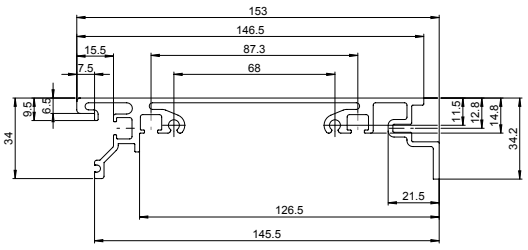

Profile 4 Side A/B

External dimensions 153 mm
Mounting depth 140 mm



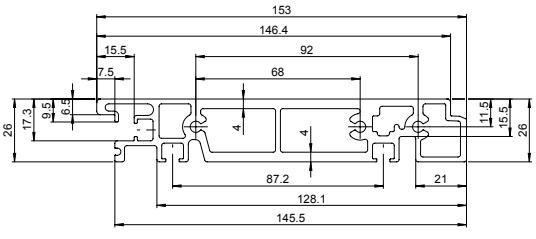

Overview profile combinations

Profile 1 and 4 Side C/D

Mounting depth 220 mm



Profile 1 and 4 Side A/B

Mounting depth 220 mm



Profile 2 and 4 Side C/D

Mounting depth 270 mm



Profile 2 and 4 Side A/B

Mounting depth 270 mm



Profile 5 and 6 Side C/D

Mounting depth 135 mm



Profile 5 and 6 Side A/B

Mounting depth 135 mm



Profile 1 and 6 Side C/D

Mounting depth 160 mm



Profile 1 and 6 Side A/B

Mounting depth 160 mm



Profile 2 and 6 Side C/D

Mounting depth 210 mm



Profile 2 and 6 Side A/B

Mounting depth 210 mm



Profile 5 and 4 Side C/D

Mounting depth 195 mm



Profile 5 and 4 Side A/B

Mounting depth 195 mm



L'IMPULSION
Retrouvez nous sur
www.limpulsion.fr

Connection to suspension system

	GTS GTKe	GT 48/2	GTN II	GT 50/2	GT 60/2	GT 80/2	GTK 80	GTL	Moterm
Operating enclosure									
Profile 1	•	•							•
Profile 2	•	•	•	•	•				•
Profile 3			•	•	•	•	•	•	•
Profile 1+4			• Profile 4	• Profile 4	• Profile 4	• Profile 4		• Profile 4	•
Profile 2+4			• Profile 4	• Profile 4	• Profile 4	• Profile 4		• Profile 4	•
Profile 5+6	• Profile 6 only GTS								•
Profile 5					only possible via rear wall				
Profile 1+6	• Profile 6 only GTS								•
Profile 2+6			• Profile 2	• Profile 2	• Profile 2				•
Profile 5+4			• Profile 4	• Profile 4	• Profile 4	• Profile 4		• Profile 4	•



SL 4000 with hinged rear wall



Hinged profile combination with fixed rear wall



Integrated handle profile



SL 4000 with additional fittings

Accessories

Fixing set



Order No.	Execution
10.03 60 04	M4, set = 8 pcs
10.03 60 01	M5, set = 8 pcs

Handle



Order number consisting of 1 piece. For a set (side C + D) 2 pieces are required.

Order No.	Handle length	Front plate width/height (mm)
20.60 40 02	250	265-314
20.60 40 03	300	315-364
20.60 40 04	350	365-414
20.60 40 05	400	415-464
20.60 40 06	450	465-514
20.60 40 07	500	515-614
20.60 40 09	600	615-664
20.60 40 10	650	665-714
20.60 40 11	700	715-764
20.60 40 12	750	765-814
20.60 40 13	800	815

Hinge set



Order No.	Execution
20.10 90 50	for profile 1 and 2
20.10 90 60	for profile 3

Wall holder



Order No.	Execution
20.10 90 30	for SL 4000 profile 2 and 3

Wall mounting set

Order No.	Execution
45.80 10 99	Locking plate GTN II with „Lütze" cable entry and 4 spacers for wall mounting

Aerator set



Order No.	Execution
45.80 10 02	Aerator consisting of 3 aerators for fixing in SL 4000

Further accessories see Commander system accessories

SL 4000

Enquiry ☐ Order ☐ **Please copy, complete and send to: hmi@rose-pw.de**

Company _____ Telephone _____

Contact _____ Telefax _____

Address _____ E-Mail _____

Project _____ Quantity _____ Lot size _____

☐ Operating enclosure

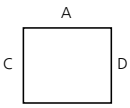

Profiles

☐ Profile 1 (Mounting depth = 80 mm)
☐ Profile 2 (Mounting depth = 130 mm)
☐ Profile 3 (Mounting depth = 190 mm)
☐ Profile 5 (Mounting depth = 55 mm)

Profile combination

☐ Profile 1 + 4 (Mounting depth = 220 mm)
☐ Profile 2 + 4 (Mounting depth = 270 mm)
☐ Profile 5 + 6 (Mounting depth = 135 mm)
☐ Profile 1 + 6 (Mounting depth = 160 mm)
☐ Profile 2 + 6 (Mounting depth = 210 mm)
☐ Profile 5 + 4 (Mounting depth = 195 mm)

Connection ☐ fixed ☐ hinged side (C or D) _____ (rear wall screwed)

Lock types ☐ Square (7 mm) ☐ Triangular (7 mm) ☐ Double ward (3 mm)
☐ Square (8 mm) ☐ Triangular (8 mm) ☐ Special lock type _____

Front plate

☐ without front plate
☐ Panel direct mounting by mounting frame / control type _____
☐ with front plate required connector surface W x H (mm) _____ x _____
required front panel dimension W x H (mm) _____ x _____

Colour

Standard
☐ Profile RAL 7035, corner pieces RAL 7035
☐ Profile natural anodized, corner pieces RAL 9007
☐ Special colour RAL (please specify RAL colour for each) ☐ Profile RAL _____ Corner RAL _____
☐ Profile anodized Corner cap RAL _____

Door / Rear wall

☐ Rear wall screwed (always with hinged profile combination)

☐ Door ☐ left hinged (side C) ☐ right hinged (side D)

Lock types
turn bolt fastener - small
☐ Square (6 mm)
☐ Triangular (6.5 mm)
☐ Slot (1.5 mm)

turn bolt fastener - large
☐ Square (8 mm)
☐ Square (7 mm)
☐ Double ward (3 mm)
☐ Triangular (7 mm)
☐ Triangular (8 mm)

☐ Special lock type _____ (note: reduction of IP rating)
☐ Further information of machining _____
☐ Modified acc. drawing no. _____ (please enclose)

Modifications

Front plate

☐ Modified acc. drawing no. _____ (please enclose)
☐ Cutting W x H (mm) _____ x _____
☐ and/or manufacturer/type of controller _____
☐ Drill holes diameter (mm) _____ number _____
Other front plate modifications / special Executions _____

Profile

☐ Modified acc. drawing no. _____ (please enclose)
☐ Cutting W x H (mm) _____ x _____
☐ Drill holes diameter (mm) _____ number _____
Other information for profile processing (items, etc.) _____

SL 4000 Enquiry ☐ Order ☐ **Please copy, complete and send to: hmi@rose-pw.de**

Connection - Suspension system

☐ Side A (top) ☐ Side B (bottom) ☐ Rear wall (on request)

☐ GTKe ☐ GT 48/2 ☐ GTS ☐ GTN II ☐ GT 50/2 ☐ GT 60/2 ☐ GT 80/2

☐ GTK 80 ☐ Moterm ☐ External system (please name drawing and manufacturer)

_____

	GTKe	GT 48/2	GTS	GTN II	GT 50/2	GT 60/2	GT 80/2	GTK 80	GTL	Moterm
Profile 1	x	x	x							x
Profile 2	x	x	x	x	x	x				x
Profile 3				x	x	x	x	x	x	x
Profile 5	only possible via rear wall									
Profile 1+4				x	x	x	x		x	x
Profile 1+6	x	x	x							x
Profile 2+4				x	x	x	x		x	x
Profile 2+6				x	x	x				x
Profile 5+4				x	x	x	x		x	x
Profile 5+6			x							x

Further notes

Accessories

Handles (additionally)

Number _____ Side(s) _____

☐ Standard (Order No.): _____

☐ Special length (mm) _____



Hinge set (only single profile)

Hinge side ☐ Side C (left) ☐ Side D (right)

Any further information of the position _____



Wall holder set (only single profile)

Position (side) ☐ Side C (left) ☐ Side D (right)

Any further information of the position _____



Document holder

Position (side) ☐ C (left) ☐ D (right)

Any further information of the position _____



Fixing set

☐ Spring nut set M4 (8 pieces) number _____

☐ Spring nut set M5 (8 pieces) number _____



Single interfaces (IP 65)

☐ USB 

☐ RJ45 

Any further information to front panel interfaces (requirements, position etc.) _____

SL 4000

Enquiry ☐ Order ☐ **Please copy, complete and send to: hmi@rose-pw.de**

Multiple interfaces

Interfaces and power supplies for optional mounting on the front plate, rear wall or side of the profile 2, 3 and 4.

Single flap (possible at front panel, rear wall or lateral on profile 2, 3 and 4)

Metal

☐ Type 1 ☐ Type 2 ☐ Type 3

Plastic with knob

☐ Type 4 ☐ Type 5 ☐ Type 6

Plastic with double ward lock

☐ Type 7 ☐ Type 8 ☐ Type 9

Double flap (possible only at front panel and rear wall)

Metal

☐ Type 11 ☐ Type 12 ☐ Type 13

Plastic with knob

☐ Type 14 ☐ Type 15 ☐ Type 16

Plastic with double ward lock

☐ Type 17 ☐ Type 18 ☐ Type 19

Protective contact sockets (screw terminals)

☐ USA (NEMA 5-15)
☐ China (C C C)
☐ Germany (VDE)
☐ Germany (VDE) orange
☐ Germany (VDE) yellow
☐ Switzerland
☐ Australia
☐ Denmark
☐ England (BS)
☐ France (UTE)
☐ Italy (CEI 23-16)
☐ India (IS 1293)
☐ Germany (VDE) with cutout for circuit breaker (only with double flap, plastic)
☐ Other _____



Data interfaces

☐ SUB-D9 (socket) number _____
☐ SUB-D9 (plug) number _____
☐ UB-D15 (socket) number _____
☐ RJ12, 6-pol. plastic number _____
☐ RJ45, 8-pol. Metal, CAT5e (socket/socket) number _____
☐ USB (socket/socket) number _____
☐ Other _____ number _____

Combination (Specification see below)



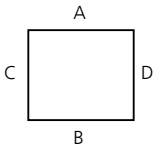

Position

☐ Front plate ☐ Rear wall (door) ☐ Side profile (profile 2 / 3)

Any further information to front panel interfaces (requirements, position etc.) _____

Further accessories _____

SL 4000 Enquiry ☐ Order ☐ **Please copy, complete and send to: hmi@rose-pw.de**

☐ Console attachment

Profile type

☐ Profie 1 (Mounting depth = 80 mm)

☐ Profile 2 (Mounting depth = 130 mm)

Front plate

☐ without front plate

☐ Panel direct mounting by frame / control type _____

☐ with front plate required connector surface W x H (mm) _____ x _____

required front panel dimension W x H (mm) _____ x _____

Colour

Standard

☐ Profile RAL 7035, corner pieces RAL 7035

☐ Profile natural anodized, corner pieces RAL 9007

☐ Special colours (please specify RAL colour for each)

☐ Profile RAL _____ corner RAL _____

☐ Profile anodized corner RAL _____

Door / Rear wall

Standard

☐ screwed

☐ other (on request) _____

Modification

Front plate

☐ Modified acc. drawing no. _____ (please enclose)

☐ Cutting W x H (mm) _____ x _____

☐ and/or manufacturer/type of controller _____

☐ Drill holes diameter (mm) _____ number _____

Other front plate modifications (Positionen usw.) _____

Profile

☐ Modified acc. drawing no. _____ (please enclose)

☐ Cutting W x H (mm) _____ x _____

☐ Drill holes diameter (mm) _____ number _____

Other profile modifications (Positionen usw.) _____

SL 3000



* UL-version only on request.

+ Universal control enclosure for automation technology
+ Variable size in height, width and depth
+ Hinged door profile at front and rear
+ Front plate insertion from front or rear

Included in delivery
Enclosure body with rear wall, fixing elements, cover profile with corners

Technical data

Material	Profile: DIN EN 573 EN AW-AlMgSi Cast corner: DIN EN 1706 EN AC-AlSi 12 Cu 1 (Fe)
Painting	Powder coating
Colour	optional RAL 7035, light grey or natural anodized special colour on request
Ingress protection	IP 65 to EN 60529
Temperature range	-30 °C to +80 °C

Product range

I. Profile for installation with front plate

Profile 1 Hinged frame profile



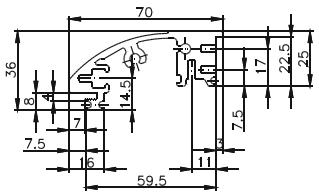

Profile 2 Intermediate frans



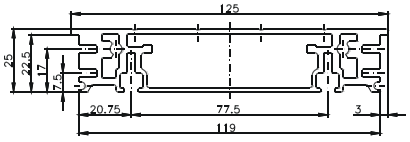

Profile 3 Body profile 170



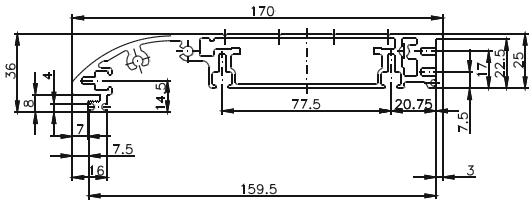

Profile 4 Body profile 220



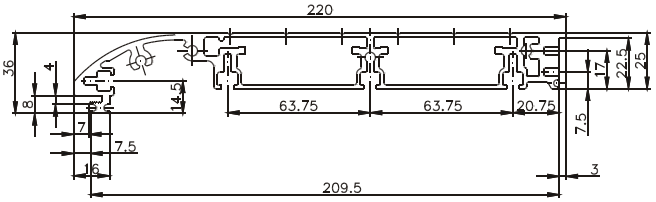

II. Profile for direct mounting of installation

Profile 3 Direct mounting



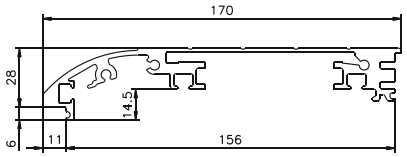

Profile 4 Direct mounting



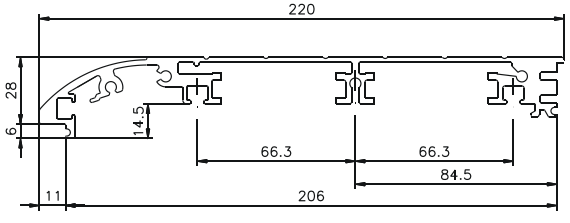

SL 3000

Example of profile combination options

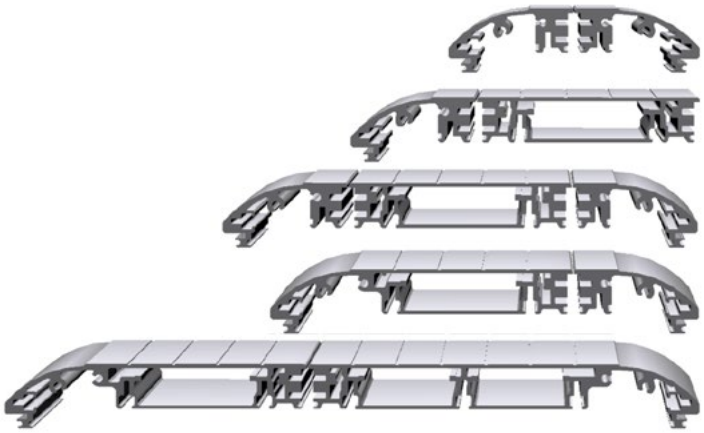

Mounting depth 125 mm

Mounting depth 184 mm

Mounting depth 250 mm

Mounting depth 225 mm

Mounting depth 375 mm

Other profile combinations on request

Profile connection options

Fixed

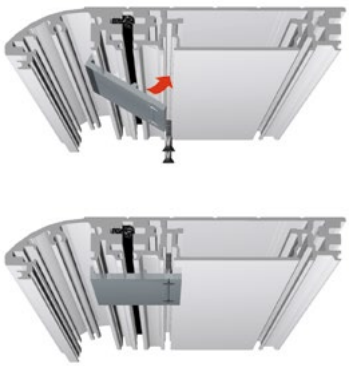

Hinged



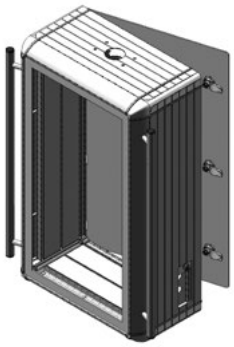



Profile info:

- All profiles can be combined with one another
- Profiles can be attached with fixed or hinged connections.
- If straight profile side (see example 2) the rear panel can also be designed as a door.
- The max. mounting depth in the case of operational enclosures is 675 mm (Profile 4 + 2 + 2 + 4)
- The max. mounting depth with console attached is 425 mm (Profile 4 + 4)
- The max. enclosure size is limited by the front plate to 1000 x 1000 mm

Connection to suspension system

Profile	GTK electronic	GTS	GT 48/2	GTN II	GT 50/2	GT 60/2	GT 80/2	GTK 80	GTL
1	•	•	•	•	•	•			
1 + 1 (fixed or hinged)	•	•	•	•	•	•			
1 + 2 (hinged)	•	•	•	•	•	•			
1 + 2 (fixed)	•	•	•	•	•	•	•	•*	
1 + 2 (hinged) + 1 (hinged)	•	•	•	•	•	•	•		
1 + 2 (hinged + 1 (fixed)	•	•	•	•	•	•	•	•*	
1 + 2 (fixed) + 1 (fixed)	•	•	•	•	•	•	•	•	
2	•	•	•	•	•	•	•		
3	•	•	•	•	•	•	•		•
3 + 1 (hinged)				•	•	•	•		•
3 + 1 (fixed)				•	•	•	•	•**	•
3 + 2 (hinged) + 1 (hinged)				•	•	•	•		•
3 + 2 (fixed) + 1 (hinged)				•	•	•	•	•	•
4				•	•	•	•	•	•

* 10 mm projection downstream of at rear
** every 5 mm projection to front and at rear

Front plate fitting

Execution I
Front plate without cover profile or rubber cover

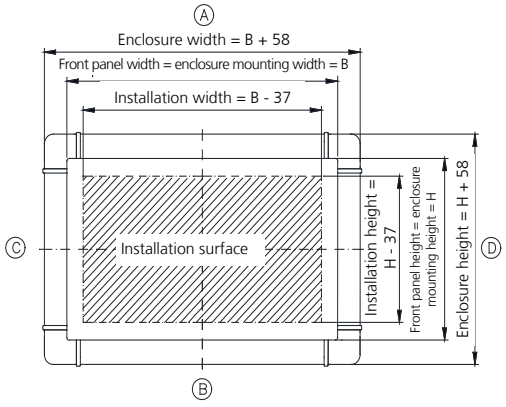

Execution II
Front plate with cover profile or rubber cover surrounding

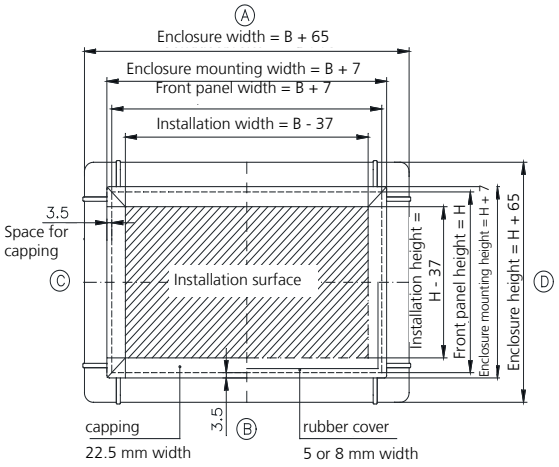

Front plate fastening
- Zinc diecast latch with slot for insertion of M4 or M5 rack connecting nuts screwed Execution
- Turn the catch round to enable the front plate to be screwed in directly from the back



- Flush closure with profile



- With M4 or M5 rack connecting nut
- Concealed capping screw heads



- Latch reversed screwed into profile

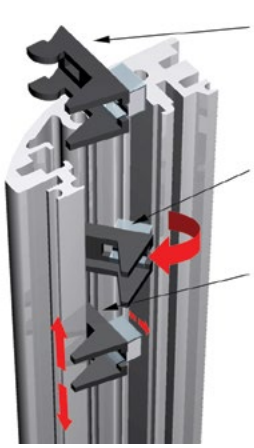

SL 3000

Accessories

Fastening set



Order No.	Execution
20.60 10 01	M4
20.60 10 02	M5
20.60 10 03	Set for front plates

FCP - Foil Control Panel



Order No.	Execution
20.60 10 50	FCP 240/3
20.60 10 51	FCP 335/6
20.60 10 52	FCP 483/8

Handle



Order number consisting of 1 piece. For a set (side C + D) 2 pieces are required.

Order No.	Handle length (mm)	Front plate width/height (mm)
20.60 40 02	250	265-314
20.60 40 03	300	315-364
20.60 40 04	350	365-414
20.60 40 05	400	415-464
20.60 40 06	450	465-514
20.60 40 07	500	515-614
20.60 40 09	600	615-664
20.60 40 10	650	665-714
20.60 40 11	700	715-764
20.60 40 12	750	765-814
20.60 40 13	800	815

Coupling flange



Order No.	Execution
20.60 10 07	GT 48/2 and GTK electronic

Mounting bracket set

Order No.
10.03 31 01

Installation rail set



Order No.	Execution
54.00 00 16	Rail length 80 mm
54.00 00 24	Rail length 160 mm
54.00 00 32	Rail length 240 mm

Accessories

Adapter plate P1/P2 onto GT 80/2

Order No.
20.60 10 08

Locking plate

For closing of unneeded coupling holes

Order No.	Execution
20.60 30 01	powdered GT 48/2 and GTK electronic
20.60 30 02	powdered GT 50/2 and GT 60/2
20.60 30 03	powdered GT 80/2
20.60 30 04	powdered GTK 80
20.60 30 05	powdered GTN II
20.60 30 11	anodized GT 48/2 and GTK electronic
20.60 30 12	anodized GT 50/2 and GT 60/2
20.60 30 13	anodized GT 80/2
20.60 30 14	anodized GTK 80
20.60 30 15	anodized GTN II

Controle attachment set



30° or 50° inclination possible depending on assembly. Standard length 300 mm, larger or smaller lengths on request.

Insert bay



Available for Profiles 2, 3 and 4 . The ingress protection is determined by the fitted equipment. It is possible to modify the interior enclosure panel walls individually. The size of the enclosure gives the maximum connector area. In the case of profile combinations it is provided on the hinge side!

Linking bar



For installation of two or more front plates within one enclosure

Further accessories see Commander system accessories

L'IMPULSION | Retrouvez nous sur www.limpulsion.fr

SL 3000

Enquiry ☐ Order ☐ **Please copy, complete and send to: hmi@rose-pw.de**

Company _____ Telephone _____

Contact _____ Telefax _____

Address _____ E-Mail _____

Project _____ Quantity _____ Lot size _____

Dimensions Operating enclosures

For console versions, please also fill out the following page - „Console attachment enclosures".

Mounting depth T (mm) _____ of combination of profiles (please always specify from front to rear):

Profile no. _____	+ Profile no. _____	+ Profile no. . _____	+ Profile no. _____
Connection:	☐ fixed	☐ fixed	☐ fixed
	☐ hinged	☐ hinged	☐ hinged
	side _____	side _____	side _____

Dimensions Please specify front panel dimensions W x H (mm) _____ x _____

and/or manufacturer/type _____

☐ Version I
Front panel without cover profile or rubber profile

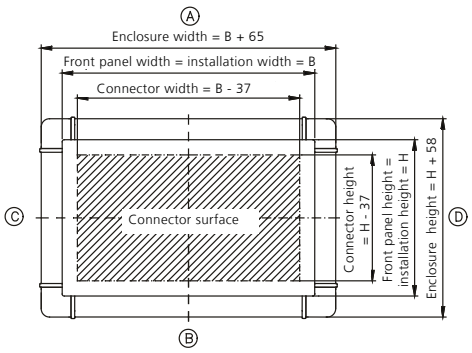

☐ Version II
Front panel surrounding with cover profile or rubber profile

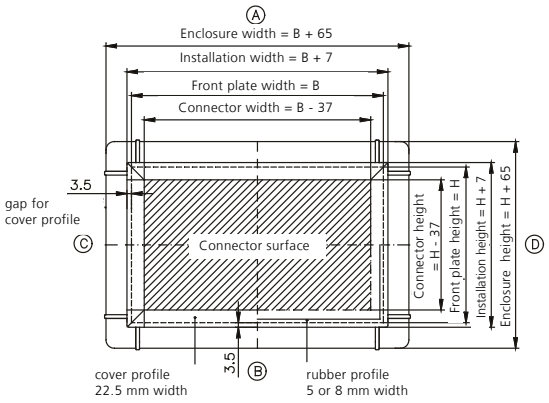

Front panel

☐ without front panel (direct mounting) ☐ with M4 fixing set or ☐ with M5 fixing set

☐ Front panel with stud bolts (flush without cover profile, dimensions, see drawing version I)

☐ Front panel with stud bolts (with cover profile, dimensions, see drawing version II)

☐ Front panel with drill holes

☐ Cover profile 22.5 mm (plastic black, dimensions s. version II)

☐ Cover profile for front panel, 5 mm rubber (Version II)

☐ Cover profile for front panel, 8 mm rubber (VersionII)

☐ other front panel _____

☐ Finish in accordance with drawing no.: _____ (please attach)

and/or specify manufacturer/controller type: _____

☐ Separation fin quantity Position in accordance with drawing-no.: _____

Drawing no.: D-SL 3000 - _____ Bl. 1

SL 3000 Enquiry ☐ Order ☐ **Please copy, complete and send to: hmi@rose-pw.de**

Accessories SL 3000 for enquiry / order **Company** _____

Rear wall

with straight closure ☐ screwed ☐ hinged, hinges side _____

with rounded closure ☐ screwed, flush ☐ with stud bolts, flush

☐ Modified according to drawing-no. _____ (please enclose if available)

Lock types

☐ Square 8 mm (Standard)

☐ Square 7 mm ☐ Triangular 7 mm ☐ Triangular 8 mm

☐ Double ward 3 mm ☐ Other _____

Colour

Standard: ☐ Profile RAL 7035, corner pieces RAL 9006, corner caps RAL 7035 powdered or

☐ Natural anodized profile, corner pieces RAL 9006, corner caps RAL 9007 powdered

☐ Special colours (please specify RAL colour for each):

Profile RAL _____ Corner pieces RAL _____ Corner caps RAL _____

Suspension system

☐ GTK electronic, side _____ ☐ GT 48/2, side _____ ☐ GTS, side _____

☐ GT 50/2, side _____ ☐ GT 60/2, side _____ ☐ GT 80/2, side _____

☐ GTN II, side _____ ☐ GTK 80, side _____ ☐ GTL, side _____

☐ Moterm ☐ Moterm with console

☐ Connection to console connector

☐ Connection to profile

☐ Other _____ Drawing-no.: _____ side _____

Total weight of fittings approx. _____ kg

for profile combination: Coupling hole on profile no. _____ or optional

specify weight distribution _____

Handle set

☐ Quantity _____ side _____ ☐ Special colour RAL _____

Other accessories

☐ Disc drive-/interface bay with flap (as for SL 2000), side _____

☐ Insert slot for: _____ side _____

☐ Finish in accordance with drawing-no.: _____

Other modifications/ special versions

Further modifications _____

_____

_____

in accordance with drawing-no.: _____

Drawing no.: D-SL 3000 - _____ Bl. 2

stated by Rose profile length: width _____ mm height _____ mm

L'IMPULSION | Retrouvez nous sur www.limpulsion.fr

SL 3000 Enquiry ☐ Order ☐ **Please copy, complete and send to: hmi@rose-pw.de**

Dimensions **Console attachment enclosures** **Company** _____

Mounting depth

T (mm) _____ of combination of profiles (please always specify from front to rear):

Profile no. _____ + Profile no. _____

Connection: ☐ fixed ☐ hinged, page _____

Dimensions

Front panel total dimensions (dimension sheet s. operational enclosure)

W x H (mm) _____ x _____ ☐ Version I ☐ Version II

and/or manufacturer/type of controller _____

Front panel

☐ without front panel (direct mounting) ☐ with M4 fixing set or ☐ mwith M5 fixing set

☐ Front panel with stud bolts (flush without cover profile, dimensions, see drawing version I)

☐ Front panel with stud bolts (with cover profile, dimensions, see drawing version II)

☐ Front panel with drill holes

☐ Cover profile 22.5 mm (plastic black, dimensions s. version II)

☐ Cover profile for front panel, 5 mm rubber (Version II)

☐ Cover profile for front panel, 8 mm rubber (VersionII)

☐ other front panel _____

☐ Finish in accordance with drawing no.: _____ (please attach)

and/or specify manufacturer/controller type: _____

☐ Separation fin quantity Position in accordance with drawing-no.: _____

Rear wall

with straight closure ☐ screwed ☐ hinged, hinges side _____

with rounded closure ☐ screwed, flush ☐ with stud bolts, flush

☐ Modified according to drawing-no. _____ (please enclose if available)

Lock types

☐ square 8 mm (standard) ☐ square 7 mm ☐ double ward 3 mm

☐ triangular 7 mm ☐ triangular 8 mm ☐ Other _____

Colour

Standard: ☐ Profile RAL 7035, corner pieces RAL 9006, corner caps RAL 7035 powdered or

☐ Natural anodized profile, corner pieces RAL 9006, corner caps RAL 9007 powdered

☐ Special colours (please specify RAL colour for each):

Profile RAL _____ Corner pieces RAL _____ Corner caps RAL _____

Console attachment set

☐ Standard 30° ☐ Standard 50°

Handle set

☐ Quantity _____ side _____ ☐ Special colour RAL _____

Other accessories

☐ Disc drive-/interface bay with flap (as for SL 2000), page _____

☐ Insert slot for: _____ side _____

☐ Finish in accordance with drawing-no.: _____

Other modifications/ special versions

Further modifications _____

in accordance with drawing-no.: _____

Drawing no.: D-SL 3000 - _____ Bl. 3

stated by Rose profile length: width _____ mm height _____ mm

SL 2000

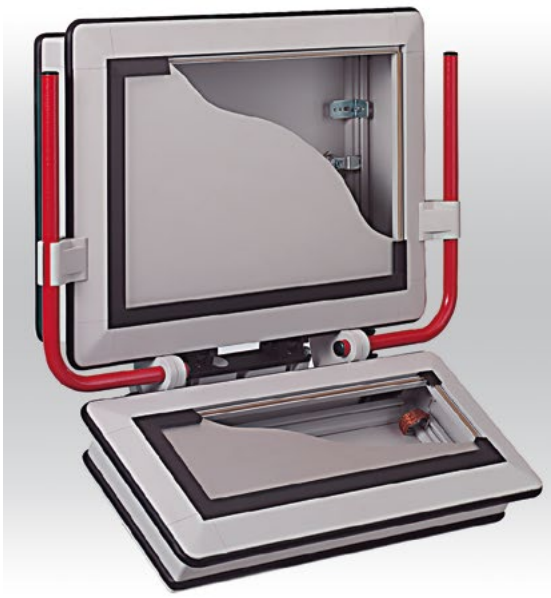



+ Enclosure system for control and display fittings
+ Variable size available in width and depth
+ All-round adaptation capabilities for accessories
+ Front panel insertion from front and rear

Included in delivery
Enclosure body with rear panel or door, front panel fixing set, cover profile and T-groove cover.

Technical data

Material	Profile: DIN EN 573 EN AW-AlMgSi Front plate, rear wall: DIN EN 573 EN AW-AlMg3 Corner pieces: DIN EN 1706 EN AC-AlSi 12 (Fe)
Painting	Powder coating
Colour	RAL 7035, light grey Handle tube: powdered RAL 3003, ruby red
Ingress protection	IP 65 to EN 60529
Temperature range	-30 °C to +80 °C

SL 2000

Product range

Front plate dimensions H x W (mm)	Profile 1 Mounting depth 80,5 mm	Weight (g)	Profile 2 Mounting depth 110 mm	Weight (g)	Profile 3 Mounting depth 185 mm	Weight (g)	Front plate with drill hole (insert from front)	Weight (g)	Front plate without drill hole (insert from rear)	Weight (g)
Rear wall screwed										
267 x 483	**19.50 65 01**	4700	**19.50 95 01**	5500	**19.50 19 01**	6700	**19.60 00 01**	1050	**19.60 00 11**	1030
312 x 483	**19.51 65 01**	5100	**19.51 95 01**	5900	**19.51 19 01**	7100	**19.60 01 01**	1200	**19.60 01 11**	1220
356 x 483	**19.52 65 01**	5400	**19.52 95 01**	6300	**19.52 19 01**	7500	**19.60 02 01**	1400	**19.60 02 11**	1400
155 x 483	**19.53 65 01**	4100	**19.53 95 01**	4600	**-**		**19.60 04 01**	600	**19.60 04 11**	600
Special sizes*	**19.59 65 01**		**19.59 95 01**		**19.59 19 01**		**19.60 03 01**		**19.60 03 11**	
Door at rear										
267 x 483	**19.50 65 00**	4900	**19.50 95 00**	5600	**19.50 19 00**	6600	**19.60 00 01**	1050	**19.60 00 11**	1030
312 x 483	**19.51 65 00**	5200	**19.51 95 00**	6000	**19.51 19 00**	7200	**19.60 01 01**	1200	**19.60 01 11**	1220
356 x 483	**19.52 65 00**	5500	**19.52 95 00**	6400	**19.52 19 00**	7600	**19.60 02 01**	1400	**19.60 02 11**	1400
155 x 483	**19.53 65 00**	4200	**19.53 95 00**	4700	**-**		**19.60 04 01**	600	**19.60 04 11**	600
Special sizes*	**19.59 65 00**		**19.59 95 00**		**19.59 19 00**		**19.60 03 01**		**19.60 03 11**	

* Please specify front panel dimensions

Technical details

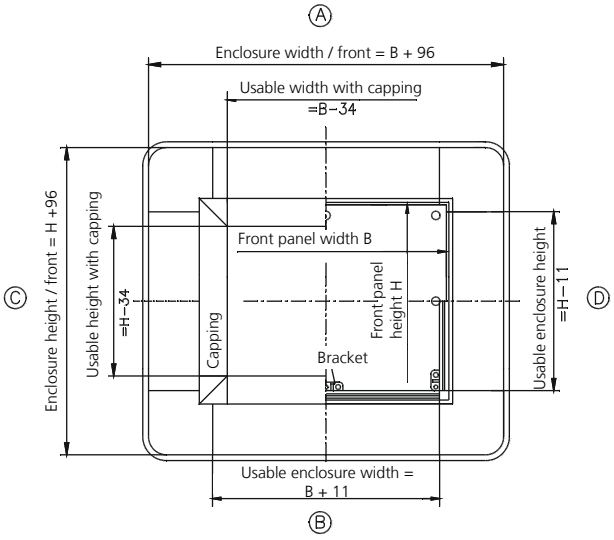

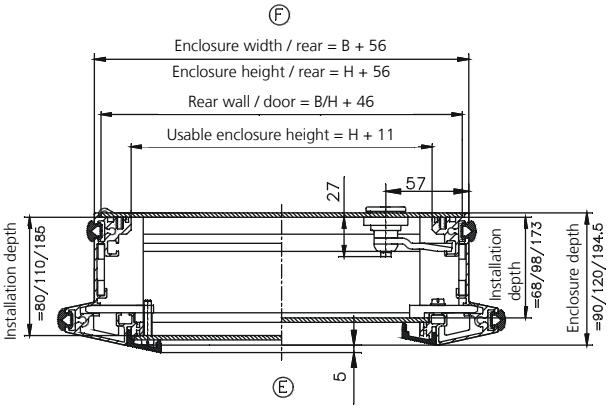

Profile

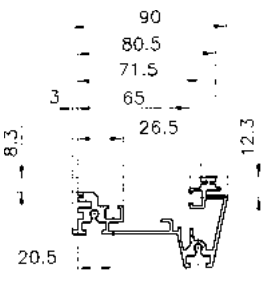

Profile 1

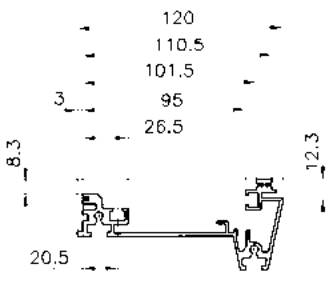

Profile 2

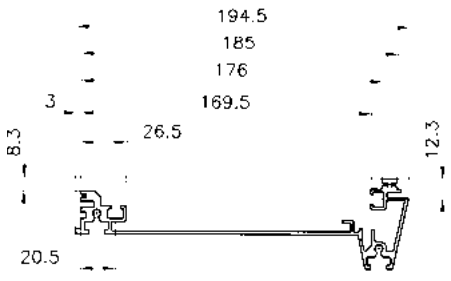

Profile 3

Front plate fastening

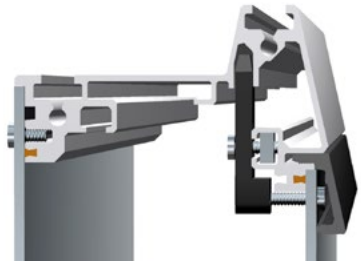

Front panel installation screwed from front

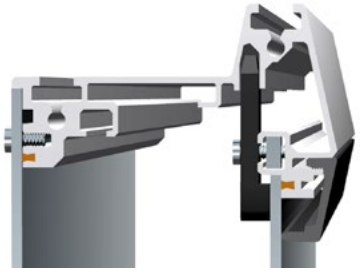

Front panel installation from rear

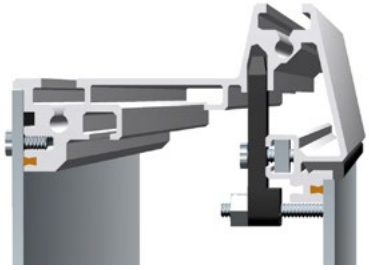

Front panel installation with stud bolts

Accessories

Handle set



Order No.	Execution
19.60 20 01	Set = 2 brackets, 1 tube, L = 256 mm
19.60 20 02	Handle corner set = 3 brackets, 1 tube, L = 556/395 mm
19.60 20 06	Set = 2 brackets, 1 tube, L = 472 mm
19.60 20 04	Set = 2 brackets, 1 tube, L = 301 mm
19.60 20 05	Set = 2 brackets, 1 tube, L = 345 mm
19.60 20 99	Set = 2 brackets, 1 tube, special length

Coupling flange



Order No.	Execution
19.60 20 03	Profile 1 for GT 48/2 and GTK electronic (GTK electronic only 49.45 73 00 and 49.45 75 00)
19.60 20 11	Profile 2 for GT 48/2 and GTK electronic
19.60 20 12	Profile 3 for GT 48/2 and GTK electronic
19.60 20 07	Profile 2 for GT 50/2, GT 60/2 and GTN II
19.60 20 08	Profile 3 for GT 50/2, GT 60/2 and GTN II
19.60 20 13	Profile 3 for GT 80/2 and GTK 80
19.60 20 14	Profile 2 for GT 80/2
19.60 20 15	Profile 1 for GTS
19.60 20 16	Profile 2 for GTS

Control attachment set



Order No.	Execution
19.59 00 11	15° inclination fixed
19.59 00 12	30° inclination fixed
19.59 00 13	adjustable
19.59 00 98	Control attachment set, 15° inclination fixed, special length*
19.59 00 99	Control attachment set, 30° inclination fixed, special length*

L'IMPULSION | Retrouvez nous sur www.limpulsion.fr

Accessories

Control panel installation set



Order No.	Execution
19.60 10 03	for profile 3, (6 pcs)
19.60 10 00	for profile 1 and 2 (6 pcs)

Hinge set



Order No.
19.60 10 08

Quick fastener set



Order No.	Execution
19.60 10 07	for frontplate (Set = 12 Stk)

Linking bar



Order No.	Execution
19.59 00 20	483 mm
19.59 00 21	Special length

Spring nut set

Order No.	Execution
10.03 60 01	M5 (8 pcs)

Fixing set



Order No.	Execution
19.60 10 01	Fixing set 1 (12 spring nuts, brackets, screws) M5
19.60 10 02	Fixing set 2 (30 spring nuts, brackets, screws) M5

Further accessories see Commander system accessories

SL 2000

Enquiry ☐ Order ☐ **Please copy, complete and send to: hmi@rose-pw.de**

Company _____ Telephone _____

Contact _____ Telefax _____

Address _____ E-Mail _____

Project _____ Quantity _____ Lot size _____

☐ Operation enclosures

Execution ☐ Door ☐ rear wall screwed

Dimensions ☐ Profile 1 ☐ Profile 2 ☐ Profile 3

☐ Recessed rear panel for _____ mm mounting depth

Please specify front panel dimensions or manufacturer/controller type:



W x H (mm) _____ x _____

or manufacturer/type _____



W x H (mm) _____ x _____

or manufacturer/type _____



W x H (mm) _____ x _____

or manufacturer/type _____

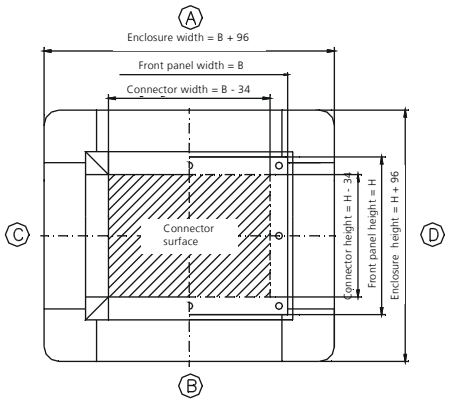

Front panel ☐ 3 mm, with drill holes ☐ 3 mm, without drill holes ☐ other _____ mm

☐ Finish in accordance with drawing (please attach)

or state manufacturer/controller type: _____

☐ Keyboard enclosures

Execution ☐ Door ☐ rear wall screwed

Dimensions ☐ Profile 1 ☐ Profile 2

Please specify the number and dimensions of the front panel or the manufacturer and controller type.



W x H (mm) _____ x _____ or manufacturer/type _____



W x H (mm) _____ x _____ or manufacturer/type _____

Front panel ☐ 3 mm, with drill holes ☐ 3 mm, without drill holes ☐ other _____ mm

☐ Finish in accordance with drawing (please attach)

or state manufacturer/controller type: _____

Console attachment set ☐ standard _____ (Order No.) ☐ Custom length _____ mm

Suspension system

☐ GTK electronic / GT 48/2, on side _____
☐ GT 50/2 / GT 60/2, on side _____
☐ GT 80/2 / GTK 80, on side _____
☐ GTN II, on side _____
☐ GTS, on side _____
☐ other _____ on side _____
☐ Moterm Operational enclosure from 236 mm front panel width
Console enclosure (fixed inclination) from 440 mm front panel width
Console enclosure (fixed inclination) from 580 mm front panel width

Handle set

☐ Standard _____ (Order No.) Mounting side _____
☐ Special length _____ mm Mounting side _____

Colour ☐ Standard (RAL 7035, handle red RAL 3003) ☐ Special colour (RAL) _____

Other accessories

☐ Disk mounting bay, mounting side _____
☐ Hinge set, mounting side _____
☐ Keyboard holder
☐ Document holder
☐ Separating strip, number _____
☐ Panel mounting for profile 1
☐ Panel mounting for profile 2
☐ Panel mounting for profile 3
☐ Fixing set 12-piece
☐ Fixing set 30-piece
☐ Quick fixing set
☐ Spring nut set
☐ Rubber cover narrow 8 mm
☐ Rubber cover narrow 5 mm

ComTronic



+ Aluminium profile compact commander in 2 widths
+ Integrated cooling system
+ External system groove
+ Variable profile lengths

Included in delivery
Profile enclosure body, on rear side door or screwed wall; fastening elements for front panel; front panel order separately

Technical data

Material	Enclosure profile: DIN EN 573 EN AW-AlMgSi Enclosure lid: DIN EN 1706 EN AC-AlSi 12 (Fe)
Painting	Powder coating
Colour	Enclosure body and enclosure lid: RAL 7035, light grey Multi function profile: RAL 9005, jet black
Ingress protection	IP 65 to EN 60529
Temperature range	-30 °C to +65 °C

L'IMPULSION
Retrouvez nous sur
www.limpulsion.fr

Product range

Type	Order No.	Order No. Front plate	Weight (g)
CT 110-350-S	**20.80 10 10**	**20.80 91 01**	7000
CT 110-520-S	**20.80 10 20**	**20.80 91 02**	8500
CT 110-SL-S	**20.80 10 99**	**20.80 91 98**	-
CT 110-350-S-GT	**20.80 11 10**	**20.80 91 01**	7000
CT 110-520-S-GT	**20.80 11 20**	**20.80 91 02**	8500
CT 110-SL-S-GT	**20.80 11 99**	**20.80 91 98**	-
CT 145-350-S	**20.80 40 10**	**20.80 91 03**	9600
CT 145-520-S	**20.80 40 20**	**20.80 91 04**	11400
CT 145-SL-S	**20.80 40 99**	**20.80 91 99**	-
CT 145-350-S-GT	**20.80 42 10**	**20.80 91 03**	9600
CT 145-520-S-GT	**20.80 42 20**	**20.80 91 04**	11400
CT 145-SL-S-GT	**20.80 42 99**	**20.80 91 99**	-

SL = special length

Suspension adaptation

for adaptation of ROSE suspension systems
- GT 48 and GTK electronic for ComTronic 110
- GTN II for ComTronic 145
- other machining by version "without coupling hole" available

Type	GT 48/2 GTS	GTK electronic	GTN II	without coupling hole
CT110-350-S				•
CT110-520-S				•
CT110-SL-S				•
CT110-350-S-GT	•	•		
CT110-520-S-GT	•	•		
CT110-SL-S-GT	•	•		
CT145-350-S				•
CT145-520-S				•
CT145-SL-S				•
CT145-350-S-GT			•	
CT145-520-S-GT			•	
CT145-SL-S-GT			•	

Rear wall mounting

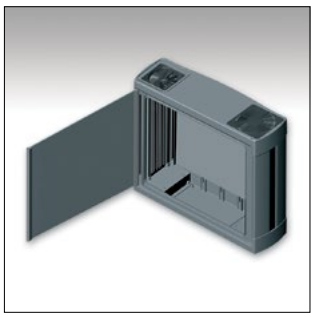

1. Door with fast lock system
- Standard version
- Hinge side is fixed by pin screw with blind plugs
- Lock side is provided only by pin screws

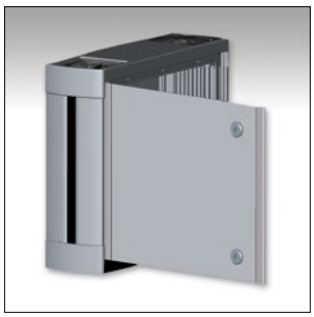

2. Door with turn bolt fastener
- Option available
- Hinge side is fixed by pin screw with blind plugs
- Lock side is provided with two turn bolt fasteners

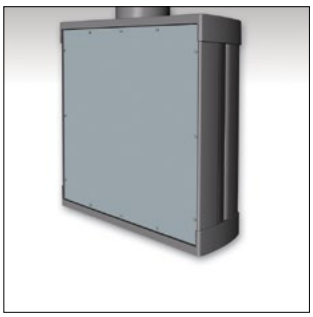

3. Rear wall completely closed
- Optional available
- Rear wall fixed by screws

L'IMPULSION | Retrouvez nous sur www.limpulsion.fr

Accessories

Front plate

Order No.	Execution
20.80 91 01	for 20.80 10 10; 20.80 11 10
20.80 91 02	for 20.80 10 20; 20.80 11 20
20.80 91 98	for 20.80 10 98; 20.80 11 99
20.80 91 03	for 20.80 40 10; 20.80 42 10
20.80 91 04	for 20.80 40 20; 20.80 42 20
20.80 91 99	for 20.80 40 99; 20.80 42 99

Handle set



Order No.	Execution
20.80 90 02	L = 350 mm (set = 2 pcs)
20.80 90 03	L = 500 mm (set = 2 pcs)
20.80 90 99	Special length (set = 2 pcs)

Mounting set

Order No.	
10.03 31 01	Mounting bracket set (4 brackets, spring nuts, screws)

Cover plate

Order No.	Execution
20.80 90 04	for CT 110 (4 pcs)
20.80 90 05	for CT 145 (4 pcs)

Wall holder



Order No.
20.80 90 01

Ventilator



Order No.	Execution
83.90 00 04	Ventilator 60 for ComTronic 110 (1 pc)
83.90 00 05	Ventilator 92 for ComTronic 145 (1 pc)

NoVoTronic-adapter



Order No.	Execution
20.80 90 06	NoVoTronic-adapter P80
20.80 90 07	NoVoTronic-adapter P100
20.80 90 08	NoVoTronic-adapter P160

Further accessories see Commander system accessories

Technical details

Type	Order No.	Front plate W x H (mm)	Installation W x H (mm)	Enclosure W x H (mm)	Mounting depth	Enclosure depth
CT 110-350-S	**20.80 10 10**	266 x 350	255 x 336	365 x 442	91	118
CT 110-350-S-GT	**20.80 11 10**	266 x 350	255 x 336	365 x 442	91	118
CT 110-520-S	**20.80 10 20**	266 x 520	255 x 506	365 x 612	91	118
CT 110-520-S-GT	**20.80 11 20**	266 x 520	255 x 506	365 x 612	91	118
CT 110-SL-S	**20.80 10 99**	266 x SL	255 x SL	365 x SL	91	118
CT 110-SL-S-GT	**20.80 11 99**	266 x SL	255 x SL	365 x SL	91	118
CT 145-350-S	**20.80 40 10**	351 x 350	340 x 336	453 x 442	127	153
CT 145-350-S-GT	**20.80 42 10**	351 x 350	340 x 336	453 x 442	127	153
CT 145-520-S	**20.80 40 20**	351 x 520	340 x 506	453 x 612	127	153
CT 145-520-S-GT	**20.80 42 20**	351 x 520	340 x 506	453 x 612	127	153
CT 145-SL-S	**20.80 40 99**	351 x SL	340 x SL	453 x SL	127	153
CT 145-SL-S-GT	**20.80 42 99**	351 x SL	340 x SL	453 x SL	127	153

SL = Special length

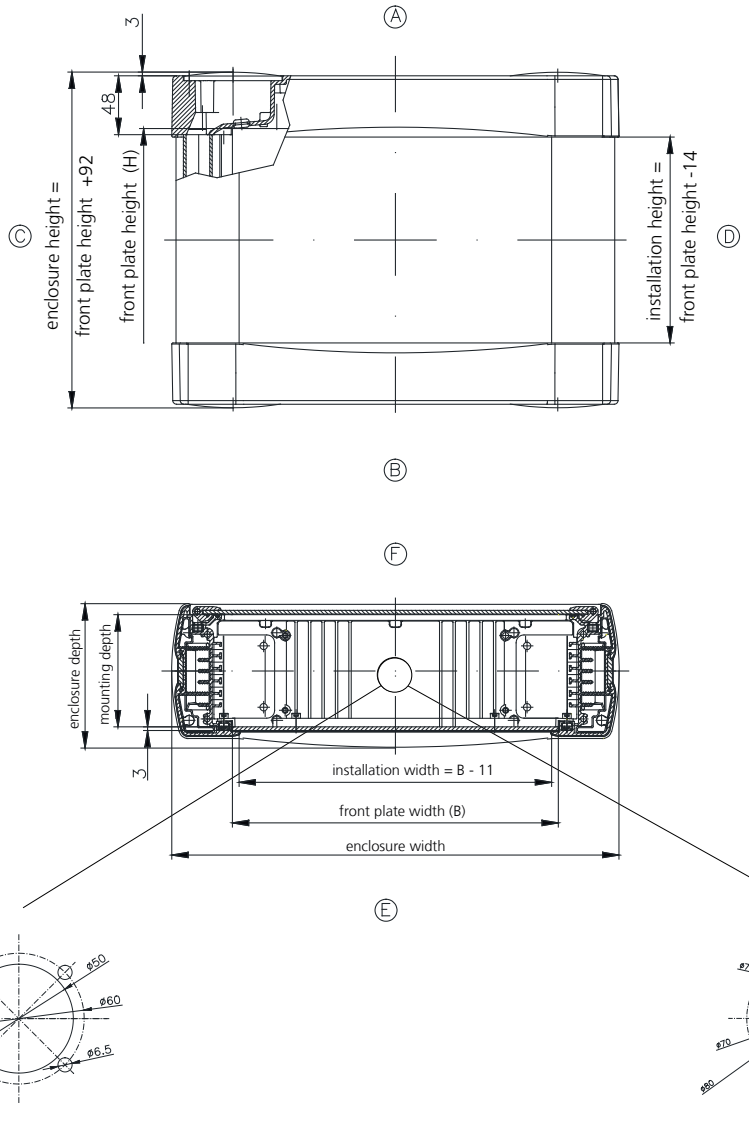

Drilling hole GT 48/2 and GTK electronic

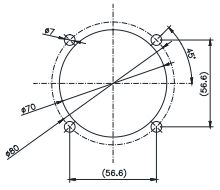

Drilling hole GTN II

L'IMPULSION | Retrouvez nous sur www.limpulsion.fr

ComTronic

Enquiry ☐ Order ☐ **Please copy, complete and send to: hmi@rose-pw.de**

Company _____ Telephone _____

Contact _____ Telefax _____

Address _____ E-Mail _____

Project _____ Quantity _____ Lot size _____

Dimensions operating enclosures

☐ ComTronic 110

☐ for front panel 266 x 350 mm (W x H) ☐ for front panel 266 x 520 mm (W x H)

☐ for front panel 266 x special length mm (W x H)

☐ ComTronic 145

☐ for front panel 351 x 350 mm (W x H) ☐ for front panel 351 x 520 mm (W x H)

☐ for front panel 351 x special length mm (W x H)

front panel dimension special length H (mm) _____ (high)

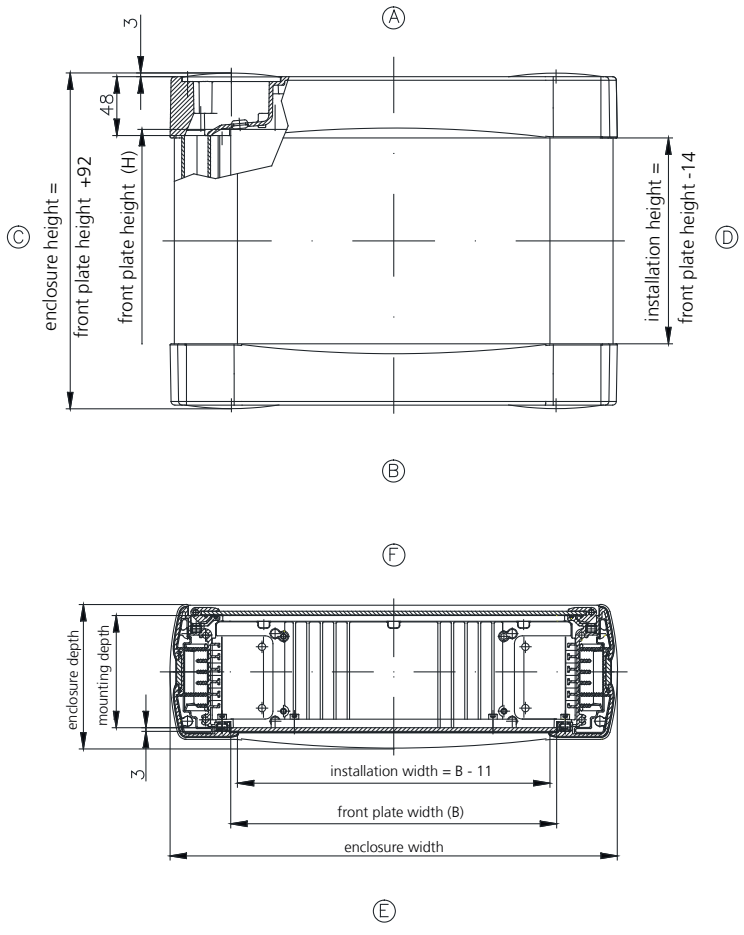

	110	145
Mounting depth:	91	127
Enclosure depth:	118	153
Installation width:	255	340

☐ Front panel mounted: ☐ yes ☐ no

Modified acc. to drawing no.: _____

or specify manufacturer / control type _____

ComTronic

Enquiry ☐ Order ☐ **Please copy, complete and send to: hmi@rose-pw.de**

Accessory to inquiry / order

Company: _____

Rear wall

☐ With fast lock system (standard) Hinged side _____ (standard side D)
☐ With turn bolt fastener Hinged side _____ (standard side D)
☐ Square 6 mm (standard) ☐ Triangular 6,5 mm ☐ Slot 1,5 mm
☐ Screwed
☐ Rear wall machining acc. drawing no. _____

Colour

☐ Standard: light grey, RAL 7035
☐ Special colour (please specify RAL colour single):
Profile RAL _____ Lid RAL _____ Slot-in strip RAL _____ (standard: black)

Suspension system

☐ without
☐ GTK electronic or GT 48/2 Side _____ (standard side A by ComTronic 110)
☐ GTS Side _____ (standard side A by ComTronic 110)
☐ GTN II Side _____ (standard side A by ComTronic 110)
☐ Moterm
☐ other _____ Drawing no. _____ Side _____
Total weight of mountings ca. _____ kg

Handle set

☐ Side C and D ☐ Special colour RAL _____ (standard: black)
☐ Special length _____ mm

Ventilator (1 pcs.)

☐ Standard 2 pcs.
☐ Side _____ (standard: side A)
divergent by inset of only one ventilator

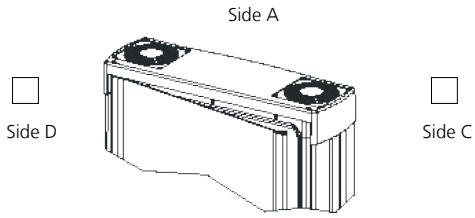

Cover elements (4 pcs.)

☐ (or hygienic areas) attention: none optimal cooling effect!

NoVoTronic adapter

☐ Side _____ (standard: side D)

Wall holder-CT

☐ Side _____ (standard: Side C)

Other machining / special versions

acc. drawing no.: _____

Commander 1



+ Small control enclosure in aluminium diecast with protective bumperbars
+ Robust aluminium diecast enclosure body with front panel
+ Transparent cover and handle set (optional)
+ High protection class IP 65

Included in delivery
Enclosure body with front frame and fastening screws (2 or 4 pcs.).
Please order front panel separately

Technical data

Material	DIN EN 1706 EN AC-AlSi 12 (Fe)
Painting	Powder coating
Colour	Enclosure body: RAL 7038, agate grey Front frame: RAL 7043, traffic grey B Special colour on request
Ingress protection	IP 65 to EN 60529 with transparent cover IP 54

Product range

Type	Dimensions H x W x D (mm)	Enclosure without front panel	Enclosure drilled for attachment of handle, without front panel	Weight (g)	1 set single handle for side A + B 	1 set single handle for side C + D 	Handling frame for side A + B 	Handling frame for side C + D 
13.05	230 x 100 x 128	**13.05 00 00**		2170				
13.07	260 x 160 x 108	**13.07 00 00**		2450				
13.08	360 x 160 x 108	**13.08 00 00**		2730				
13.10	230 x 200 x 128	**13.10 00 00**	**13.10 10 00**	3075	**13.34 00 01**	**13.34 00 01**		**13.34 10 01**
13.11	230 x 200 x 198	**13.11 00 00**	**13.11 10 00**	4495	**13.34 00 01**	**13.34 00 01**		**13.34 10 01**
13.12	230 x 330 x 128	**13.12 00 00**	**13.12 10 00**	4620	**13.34 00 03**	**13.34 00 01**	**13.34 12 02**	**13.34 12 01**
13.13	230 x 330 x 198	**13.13 00 00**	**13.13 10 00**	6150	**13.34 00 03**	**13.34 00 01**	**13.34 12 02**	**13.34 12 01**
13.14	230 x 400 x 128	**13.14 00 00**	**13.14 10 00**	4240	**13.34 00 04**	**13.34 00 01**	**13.34 14 02**	**13.34 14 01**
13.15	230 x 400 x 242	**13.15 00 00**	**13.15 10 00**	6840	**13.34 00 04**	**13.34 00 01**	**13.34 14 02**	**13.34 14 01**
13.17	230 x 280 x 130	**13.17 00 00**	**13.17 10 00**	4000	**13.34 00 02**	**13.34 00 01**		
13.20	310 x 400 x 128	**13.20 00 00**	**13.20 10 00**	6100	**13.34 00 04**	**13.34 00 02**	**13.34 20 02**	**13.34 20 01**
13.21	310 x 400 x 198	**13.21 00 00**	**13.21 10 00**	8000	**13.34 00 04**	**13.34 00 02**	**13.34 20 02**	**13.34 20 01**
13.22	310 x 600 x 128	**13.22 00 00**	**13.22 10 00**	9720	**13.34 00 05**	**13.34 00 02**	**13.34 22 02**	**13.34 22 01**
13.23	310 x 600 x 198	**13.23 00 00**	**13.23 10 00**	10300	**13.34 00 05**	**13.34 00 02**	**13.34 22 02**	**13.34 22 01**
13.24	310 x 400 x 244	**13.24 00 00**	**13.24 10 00**	8700	**13.34 00 04**	**13.34 00 02**	**13.34 20 02**	**13.34 20 01**
13.25	310 x 400 x 158	**13.25 00 00**	**13.25 10 00**	7085	**13.34 00 04**	**13.34 00 02**	**13.34 20 02**	**13.34 20 01**

Connection to suspension system

for type	GT 48/2 GTK electronic	GTS	GT 50/2	GT 60/2 GTN II	GT 80/2
13.05	•				
13.07	•				
13.08	•				
13.10	•	•	•		
13.11	•	•	•	•	•
13.12	•	•	•		
13.13	•	•	•	•	•
13.14	•	•	•		
13.15	•	•	•	•	•
13.17	•	•	•		
13.20	•	•	•		
13.21	•	•	•	•	•
13.22	•	•	•		
13.23	•	•	•	•	•
13.24	•	•	•	•	•
13.25	•	•	•	•	•

L'IMPULSION
Retrouvez nous sur
www.limpulsion.fr

Accessories

Type	Front plate	Mounting plate	Transparent cover with knurled lock	DIN rail TS 35/7.5	Silicone seal
13.05	**10.01 30 05**	**10.01 10 14**		**10.06 14 29**	**10.05 10 15**
13.07	**10.01 30 07**	**10.01 10 11**		**10.06 14 24**	**10.05 13 07**
13.08	**10.01 30 08**	**10.01 10 12**		**10.06 14 25**	**10.05 13 08**
13.10	**10.01 30 10**	**10.01 10 15**	**13.33 10 10**	**10.06 14 30**	**10.05 13 10**
13.11	**10.01 30 10**	**10.01 10 15**	**13.33 10 10**	**10.06 14 30**	**10.05 13 10**
13.12	**10.01 30 12**	**10.01 10 17**	**13.33 12 10**	**10.06 14 32**	**10.05 13 12**
13.13	**10.01 30 12**	**10.01 10 17**	**13.33 12 10**	**10.06 14 32**	**10.05 13 12**
13.14	**10.01 30 14**	**10.01 10 18**	**13.33 14 10**	**10.06 14 27**	**10.05 13 14**
13.15	**10.01 30 14**	**10.01 10 18**	**13.33 14 10**	**10.06 14 27**	**10.05 13 14**
13.17	**10.01 30 17**	**10.01 10 16**		**10.06 14 31**	**10.05 13 17**
13.20	**10.01 30 20**	**10.01 10 20**	**13.33 20 10**	**10.06 14 27**	**10.05 13 20**
13.21	**10.01 30 20**	**10.01 10 20**	**13.33 20 10**	**10.06 14 27**	**10.05 13 20**
13.22	**10.01 30 22**	**10.01 10 21**	**13.33 22 10**	**10.06 14 28**	**10.05 13 22**
13.23	**10.01 30 22**	**10.01 10 21**	**13.33 22 10**	**10.06 14 28**	**10.05 13 22**
13.24	**10.01 30 20**	**10.01 10 20**	**13.33 20 10**	**10.06 14 27**	**10.05 13 20**
13.25	**10.01 30 20**	**10.01 10 20**	**13.33 20 10**	**10.06 14 27**	**10.05 13 20**

Internal hinge



Swivel range 95°
set = 2 pcs

Order No.
10.02 20 01

External hinge



Swivel range 150°
set = 2 pcs

Order No.
10.02 70 43

Lock



Order No.	Execution
10.12 04 07	Square 7 mm
10.12 04 08	Square 8 mm
10.12 04 09	Triangular 7 mm
10.12 04 10	Triangular 8 mm
10.12 04 11	Daimler Benz
10.12 04 12	Double ward
10.12 04 13	Knob with lock

Accessories

Front plate

Type	Order No.	A	B	Installation width	Installation height
13.05	**10.01 30 05**	90,5	220,5	80	210

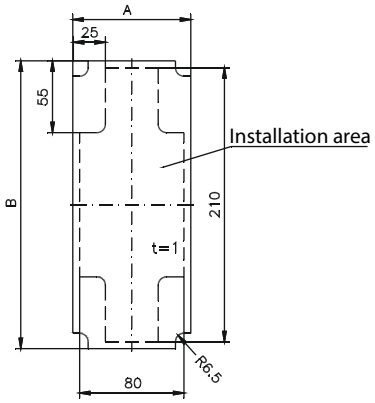

Front plate

Type	Order No.	A	B	C	D	E	F	Installation width	Installation height
13.07	**10.01 30 07**	251	151	205	140	240	-	220	120
13.08	**10.01 30 08**	351	151	305	140	340	-	320	120
13.10	**10.01 30 10**	192,5	223	-	210	179	-	154	184
13.11	**10.01 30 10**	192,5	223	-	210	179	-	154	184
13.12	**10.01 30 12**	320,5	220,5	140	207	307	-	284	184
13.13	**10.01 30 12**	320,5	220,5	140	207	307	-	284	184
13.14	**10.01 30 14**	389,5	219	140	207	377	-	354	184
13.15	**10.01 30 14**	389,5	219	140	207	377	-	354	184
13.17	**10.01 30 17**	272	222	-	208	258	-	234	184
13.20	**10.01 30 20**	390,5	300,5	300	287	377	150	354	264
13.21	**10.01 30 20**	390,5	300,5	300	287	377	150	354	264
13.24	**10.01 30 20**	390,5	300,5	300	287	377	150	354	264
13.25	**10.01 30 20**	390,5	300,5	300	287	377	150	354	264

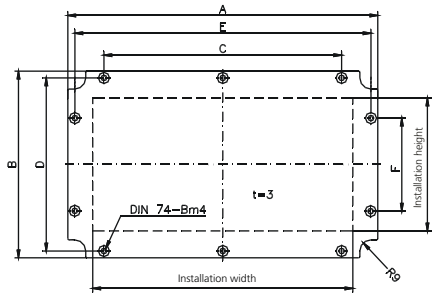

Commander 1

Accessories

Front plate

Type	Order No.	A	B	C	D	E	F	G	Installation width	Installation height
13.22	**10.01 30 22**	590,5	300,5	450	287	577	150	150	554	264
13.23	**10.01 30 22**	590,5	300,5	450	287	577	150	150	554	264

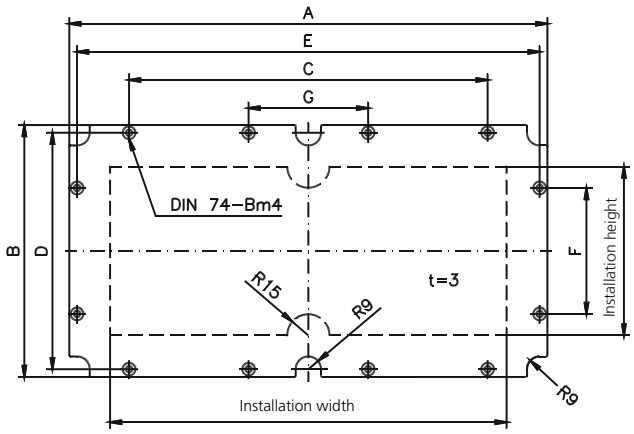

Technical details

Order No.	b	h	t	b1	h1	t1	a
13.05 00 00	100	230	129	88	218	101	14
13.10 00 00	202	232	129	189	219	108	13
13.11 00 00	202	232	198	190	220	176	14

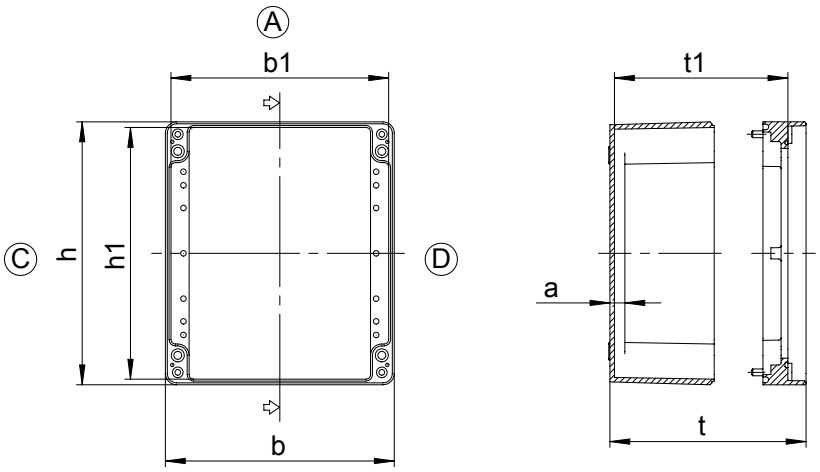

Technical details

Order No.	b	h	t	b1	h1	t1	a
13.07 00 00	260	160	109	248,5	149	88	13
13.08 00 00	360	160	109	348,5	149	88	13
13.12 00 00	330	230	129	316,5	216,5	112	13
13.13 00 00	330	230	199	316,5	216,5	176	15
13.14 00 00	400	230	129	387	217	108	13
13.15 00 00	400	230	243	384,5	214,5	220,5	14
13.17 00 00	280	230	129	387	217	108	13
13.20 00 00	404	313	129	391	301	107,5	13
13.21 00 00	404	313	199	358,5	299	176	14
13.22 00 00	600	310	129	586	296	106	14
13.23 00 00	600	310	199	584	294	176	14
13.24 00 00	404	313	245	360,5	297,5	222	14
13.25 00 00	403	312	159	391	296,5	136	14

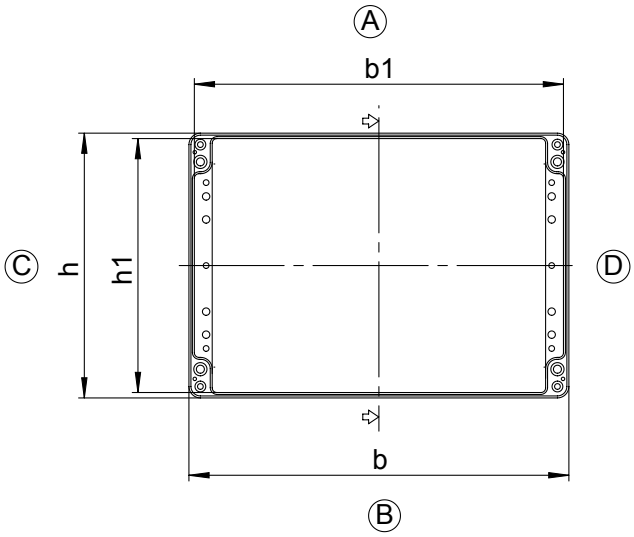

Commander 1F

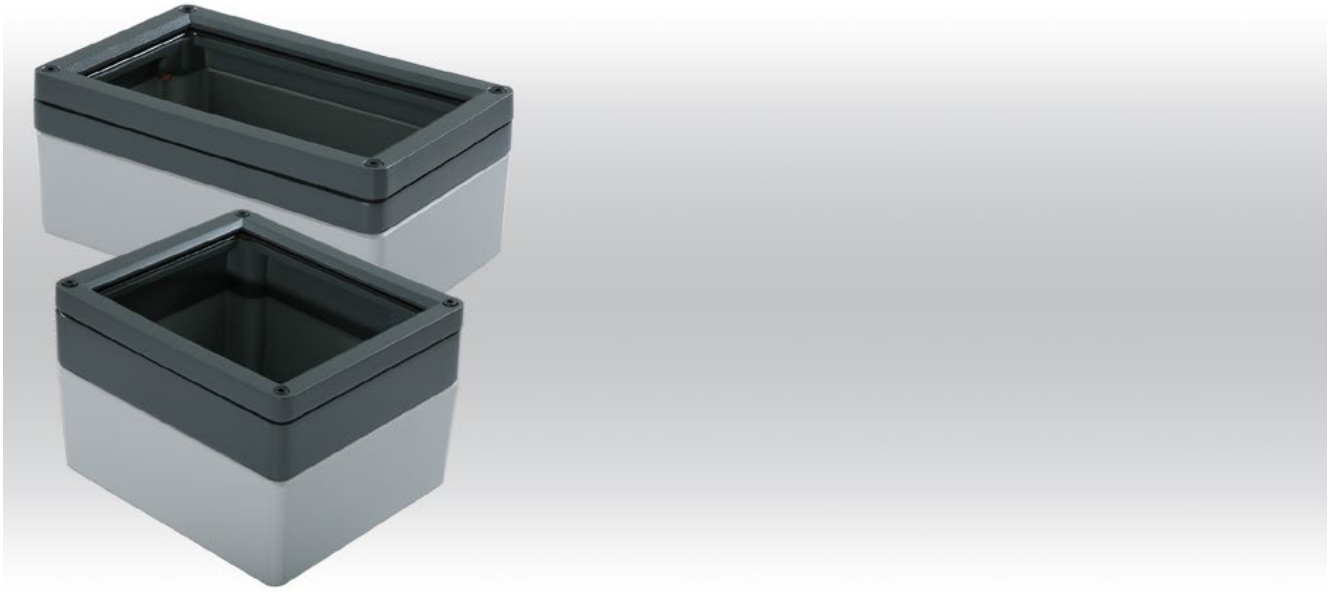

+ Small control enclosure in aluminium with front frame for front panels and keypads
+ Robust aluminium diecast enclosure body
+ Handle set (optional)
+ High protection class IP 65

Included in delivery
Enclosure body with two-part front frame, enclosure and fastening screws (2 or 4 pcs.).
Please order front panel separately

Technical data

Material	DIN EN 1706 EN AC-AlSi 12 (Fe)
Painting	Powder coating
Colour	Enclosure body: RAL 7038, agate grey Front frame: RAL 7043, trafic grey B Special colours on request
Ingress protection	IP 65 to EN 60529

Product range

Type	Dimensions H x W x D (mm)	Enclosure without front panel	Enclosure drilled for attachment of handle, without front panel	Weight (g)	1 set single handle for side A + B 	1set single handle for side C + D 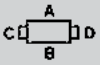	Handling frame for side A + B 	Handling frame for side A + B 
13.07	260 x 160 x 108	**13.07 05 00**		3000				
13.08	360 x 160 x 108	**13.08 05 00**		3581				
13.10	230 x 200 x 128	**13.10 05 00**	**13.10 15 00**	3040	**13.34 00 01**	**13.34 00 01**		**13.34 10 01**
13.10	230 x 200 x 153	**13.10 05 10**	**13.10 15 10**	3610	**13.34 00 01**	**13.34 00 01**		**13.34 10 01**
13.11	230 x 200 x 198	**13.11 05 00**	**13.11 15 00**	4470	**13.34 00 01**	**13.34 00 01**		**13.34 10 01**
13.12	230 x 330 x 128	**13.12 05 00**	**13.12 15 00**	3965	**13.34 00 03**	**13.34 00 01**	**13.34 12 02**	**13.34 12 01**
13.12	230 x 330 x 153	**13.12 05 10**	**13.12 15 10**	4685	**13.34 00 03**	**13.34 00 01**	**13.34 12 02**	**13.34 12 01**
13.13	230 x 330 x 198	**13.13 05 00**	**13.13 15 00**	7500	**13.34 00 03**	**13.34 00 01**	**13.34 12 02**	**13.34 12 01**
13.14	230 x 400 x 128	**13.14 05 00**	**13.14 15 00**	4580	**13.34 00 04**	**13.34 00 01**	**13.34 14 02**	**13.34 14 01**
13.15	230 x 400 x 242	**13.15 05 00**	**13.15 15 00**	6200	**13.34 00 04**	**13.34 00 01**	**13.34 14 02**	**13.34 14 01**
13.17	230 x 280 x 130	**13.17 05 00**	**13.17 15 00**	3370	**13.34 00 02**	**13.34 00 01**		
13.20	310 x 400 x 128	**13.20 05 00**	**13.20 15 00**	6000	**13.34 00 04**	**13.34 00 02**	**13.34 20 02**	**13.34 20 01**
13.21	310 x 400 x 198	**13.21 05 00**	**13.21 15 00**	7500	**13.34 00 04**	**13.34 00 02**	**13.34 20 02**	**13.34 20 01**
13.25	310 x 400 x 158	**13.25 05 00**	**13.25 15 00**	7085	**13.34 00 04**	**13.34 00 02**	**13.34 20 02**	**13.34 20 01**

Connection to suspension system

for type	GTK electronic GT 48/2	GTS	GT 50/2	GT 50/2	GT 60/2 GTN II	GT 80/2
13.07 05 00	•	•				
13.08 05 00	•	•				
13.10 05 00	•	•	•	•		
13.10 05 10	•	•	•	•		
13.11 05 00	•	•	•	•	•	•
13.12 05 00	•	•	•	•		
13.12 05 10	•	•	•	•		
13.13 05 00	•	•	•	•	•	•
13.14 05 00	•	•	•	•		
13.15 05 00	•	•	•	•	•	•
13.17 05 00	•	•	•	•		
13.20 05 00	•	•	•	•		
13.21 05 00	•	•	•	•	•	•
13.25 05 00	•	•	•	•	•	•

Commander 1F

Accessories

Type	Front plate	Mounting plate	DIN rail TS 35/7.5	Silicone seal
13.07	**10.01 32 07**	**10.01 10 11**	**10.06 14 24**	**10.05 13 07**
13.08	**10.01 32 08**	**10.01 10 12**	**10.06 14 25**	**10.05 13 08**
13.10	**10.01 32 10**	**10.01 10 15**	**10.06 14 30**	**10.05 13 10**
13.11	**10.01 32 10**	**10.01 10 15**	**10.06 14 30**	**10.05 13 10**
13.12	**10.01 32 12**	**10.01 10 17**	**10.06 14 32**	**10.05 13 12**
13.13	**10.01 32 12**	**10.01 10 17**	**10.06 14 32**	**10.05 13 12**
13.14	**10.01 32 14**	**10.01 10 18**	**10.06 14 27**	**10.05 13 14**
13.15	**10.01 32 14**	**10.01 10 18**	**10.06 14 27**	**10.05 13 14**
13.17	**10.01 32 17**	**10.01 10 16**	**10.06 14 31**	**10.05 13 17**
13.20	**10.01 32 20**	**10.01 10 20**	**10.06 14 27**	**10.05 13 20**
13.21	**10.01 32 20**	**10.01 10 20**	**10.06 14 27**	**10.05 13 20**
13.25	**10.01 32 20**	**10.01 10 20**	**10.06 14 27**	**10.05 13 20**

Internal hinge



Swivel range 95°

set = 2 pcs

Order No.	Execution
10.02 20 01	only for type 13.07 to 13.15

External hinge



Swivel range 150°

set = 2 pcs

Order No.
10.02 70 43

Lock



Order No.	Execution
10.12 04 07	Square 7 mm
10.12 04 08	Square 8 mm
10.12 04 09	Triangular 7 mm
10.12 04 10	Triangular 8 mm
10.12 04 11	Daimler Benz
10.12 04 12	Double ward
10.12 04 13	Knob with lock

Accessories

Front plate

Type	Order No.	A	B	Installation width	Installation height
13.07F	**10.01 32 07**	230	130	215	115
13.08F	**10.01 32 08**	330	130	315	115
13.10F	**10.01 32 10**	170	200	155	185
13.11F	**10.01 32 10**	170	200	155	185
13.12F	**10.01 32 12**	300	200	285	185
13.13F	**10.01 32 12**	300	200	285	185
13.14F	**10.01 32 14**	370	200	355	185
13.15F	**10.01 32 14**	370	200	355	185
13.17F	**10.01 32 17**	251	201	235	185
13.20F	**10.01 32 20**	375	284	359	268
13.21F	**10.01 32 20**	375	284	359	268
13.25F	**10.01 32 20**	375	284	359	268

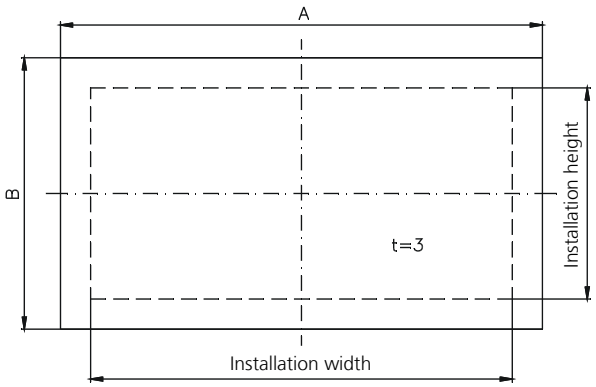

Technical details

Order No.	b	h	t	b1	h1	t1	a
13.10 05 00	202	232	129,5	189	219	113,5	13
13.10 05 10	202	232	153	189	219	137	13
13.11 05 00	202	232	198,5	190	220	181,5	14

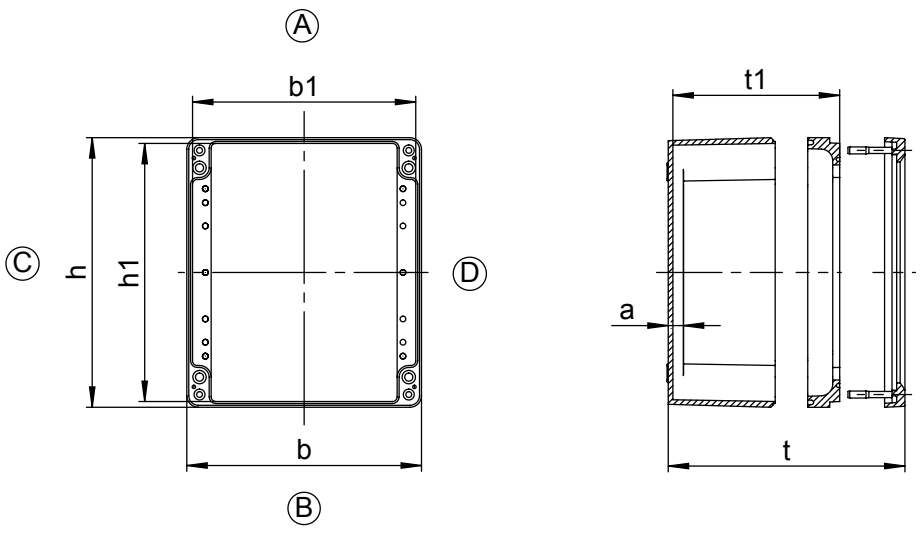

Commander 1F

Technical details

Order No.	b	h	t	b1	h1	t1	a
13.07 05 00	260	160	109,5	248,5	149	93,5	13
13.08 05 00	360	160	109,5	348,5	149	93,5	13
13.12 05 00	330	230	129,5	320,5	220,5	113,5	13
13.12 05 10	330	230	153	320,5	220,5	137	13
13.13 05 00	330	230	199,5	320,5	220,5	181,5	15
13.14 05 00	400	230	129,5	384,5	214,5	113,5	13
13.15 05 00	400	230	243,5	384,5	214,5	226	14
13.17 05 00	280	230	129,5	268	218	113,5	13
13.20 05 00	404	313	129,5	390	299	113	13
13.21 05 00	404	313	199,5	390	299	181,5	14
13.25 05 00	403	312	159,5	388,5	296,5	141,5	14

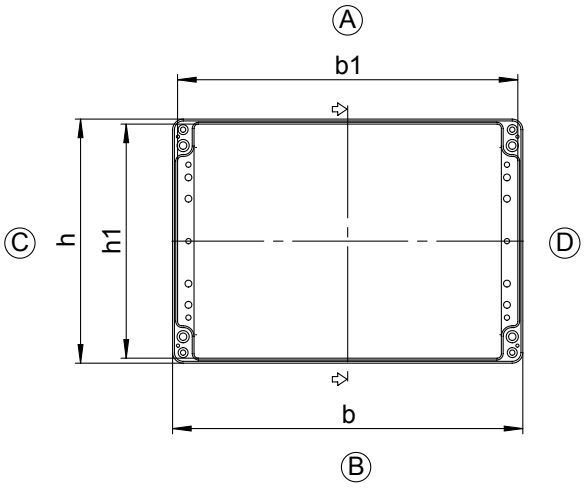

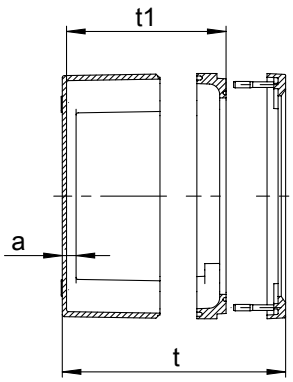

L'IMPULSION
Retrouvez nous sur
www.limpulsion.fr

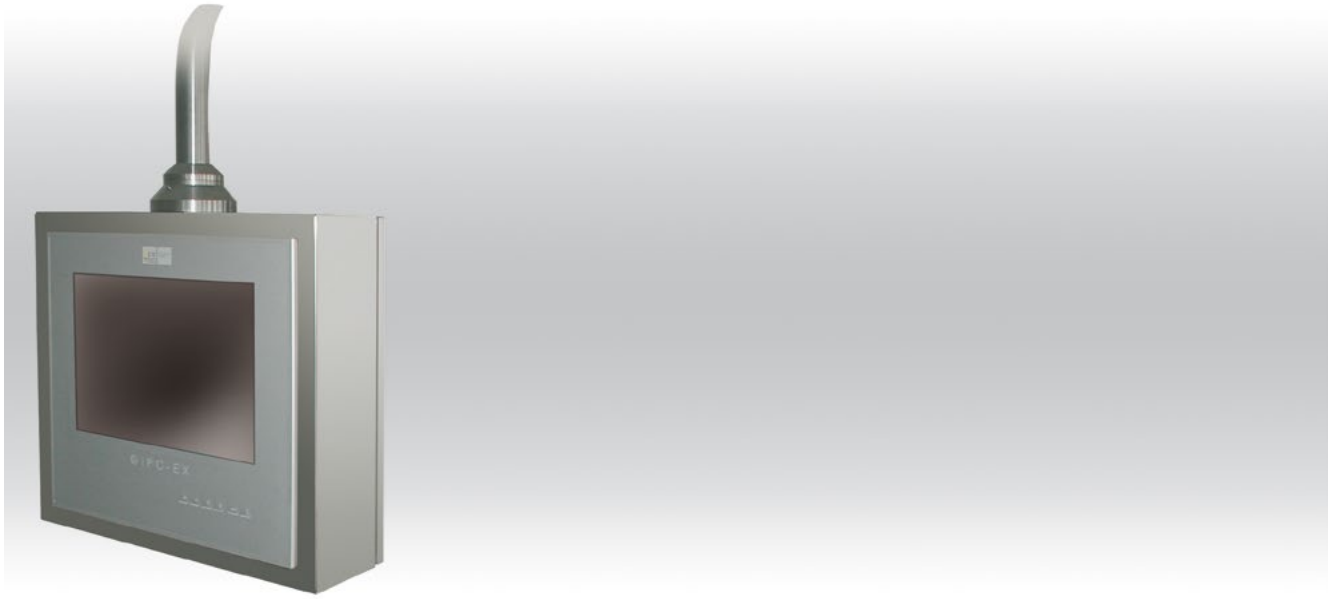

+ Stainless steel control enclosure based on switch gear cabinet KSS
+ Including reinforcement plate and drill hole for ROSE GTH suspension system
+ Optional individual sizes and Executions from 25 off

Included in delivery
Enclosure system including amplifier plate and GTH coupling hole with door, double ward lock.

Technical data

Material	Stainless steel 1.25 mm or 1.5 mm; 1.4301 / 304
Surface	grinded, grain 240
Seal	VMQ (silicone) EMC on request
Ingress protection	IP 65 to EN 60529
Temperature range	-40 °C to +80 °C

Commander KSSC

Product range

Order No.	Weight (g)	Dimensions (mm)								Drillings for suspension system (side A)
		A	B	C	D	E	S	H_U	H_{Ges}	
37.02 23 15	3300	200	300	24,6	160	100	1.25	130,7	155	GTH 48 (Bild 1)
37.02 34 21	6120	300	380	24,6	260	175	1.25	185,7	210	GTH 48 (Bild 1)
37.02 43 15	5510	400	300	24,6	360	100	1.25	130,7	155	GTH 48 (Bild 1)
37.02 46 21	12000	380	600	25,1	340	175	1.5	185,7	210	GTH 60 (Bild 2)
37.02 55 21	11000	500	500	24,6	460	175	1.25	185,7	210	GTH 60 (Bild 2)
37.02 64 15	11000	600	400	25,1	460	120	1.5	130,7	155	GTH 60 (Bild 2)
37.02 68 21	20000	600	760	25,1	560	175	1.5	185,7	210	GTH 60 (Bild 2)
37.02 99 00		special size (acc. specification)								

Cutout of size, state by order
Special size: from 25 pcs/order

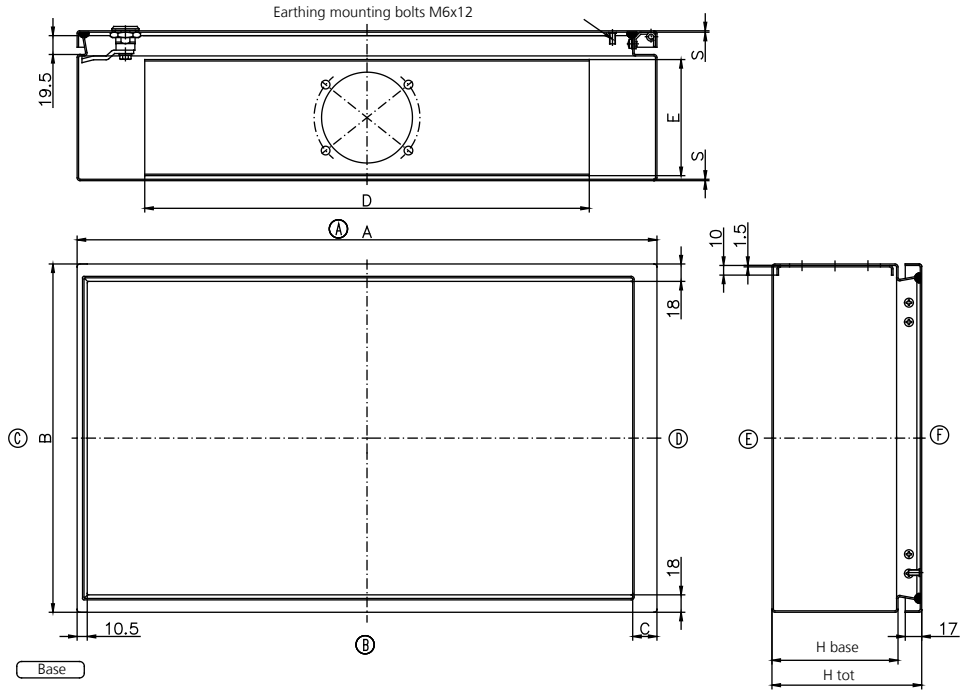

Picture 1:
Coupling drilling hole (GTH 48)

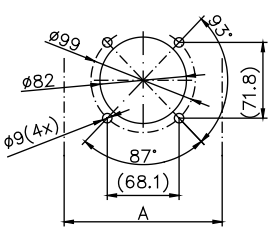

Picture 2:
Coupling drilling hole (GTH 60)

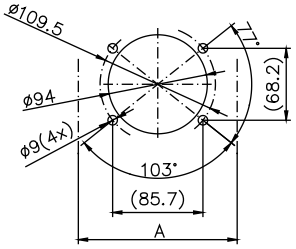

Commander 410



+ Stainless steel Commander with screwed rear wall
+ Sloped top acc. to hygienic design regulations
+ High material quality

Included in delivery

Enclosure with screwed rear wall, silicone seal - depending on Execution with closed or individual manufactured front, internal fixing and coupling hole for suspension system GTH 48

Technical data

Material	Stainless steel 1.4404/316L
Surface	grinded, grain 240
Seal	Silicone
Ingress protection	IP 66 / IP 69K to EN 60529
Temperature range	-40 °C to +80 °C

Commander 410

Product range

Order No.	Dimensions (mm) W x H x D	Z	Fitting width	Fitting height	Drillings for suspension system (Side A)	Weight (g)
56.10 02 01	380 x 250 x 150	37	320	245	GTH 48	6830
56.10 02 02	380 x 250 x 220	55	320	245	GTH 48	8010
56.10 02 03	500 x 350 x 150	37	440	345	GTH 48	10000
56.10 02 04	500 x 350 x 220	55	440	345	GTH 48	12000
56.10 02 05	500 x 450 x 150	37	440	445	GTH 48	12000
56.10 02 06	500 x 450 x 220	55	440	445	GTH 48	14000

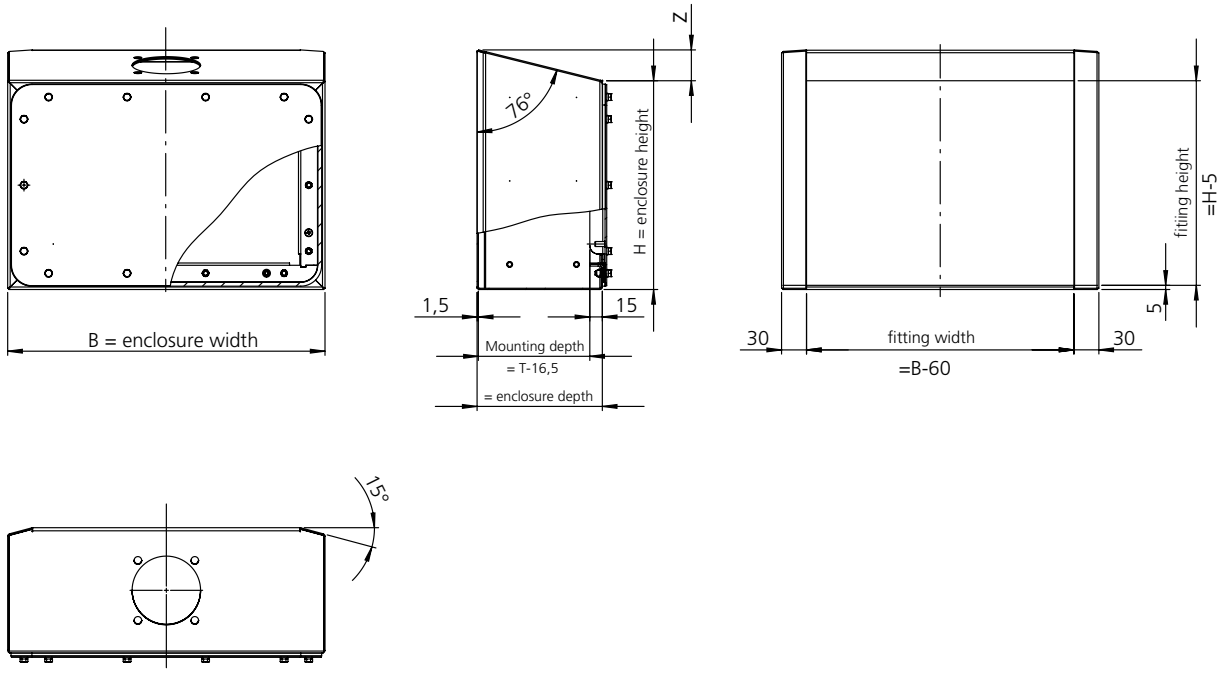

Accessories

Mounting angle set



Order No.	Execution
56.20 99 01	for internal fitting of components

Commander 420



+ Stainless steel Commander with door for industrial applications
+ High material quality
+ Handle set optional

Included in delivery

Enclosure with door, rect angle, silicone seal - depending on Execution with closed or individual manufactured front, internal fixing and coupling hole for suspension system GTH 48

Technical data

Material	Stainless steel 1.4301/304 other materials on request
Surface	grinded, grain 240
Seal	Silicone
Ingress protection	IP 65 to EN 60529
Temperature range	-40 °C to +80 °C

Commander 420

Product range

Order No.	Dimensions (mm) W x H x D	Fitting width	Fitting height	Drillings for suspension system (Side A)	Weight (g)
56.20 01 01	380 x 250 x 150	338	240	GTH 48	5790
56.20 01 02	380 x 250 x 220	338	240	GTH 48	6660
56.20 01 03	500 x 350 x 150	458	340	GTH 48	8470
56.20 01 04	500 x 350 x 220	458	340	GTH 48	9850
56.20 01 05	500 x 450 x 150	458	440	GTH 48	10000
56.20 01 06	500 x 450 x 220	458	440	GTH 48	12000

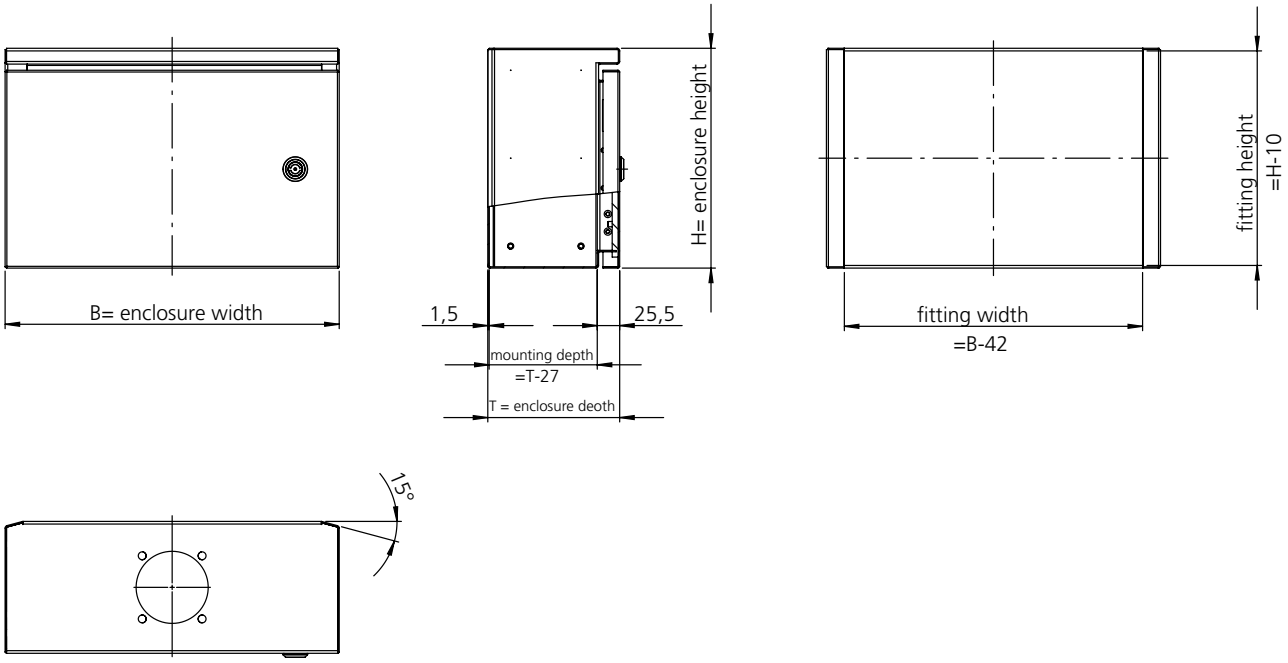

Accessories

Mounting bracket set

Order No.	Execution
56.20 99 01	for internal fitting of components

Handle set



Order No.	Execution
56.20 01 93	Handle set ECO for Commander 420, L = 220 mm
56.20 01 94	Handle set ECO for Commander 420, L = 320 mm
56.20 01 95	Handle set ECO for Commander 420, L = 420 mm

Commander 450

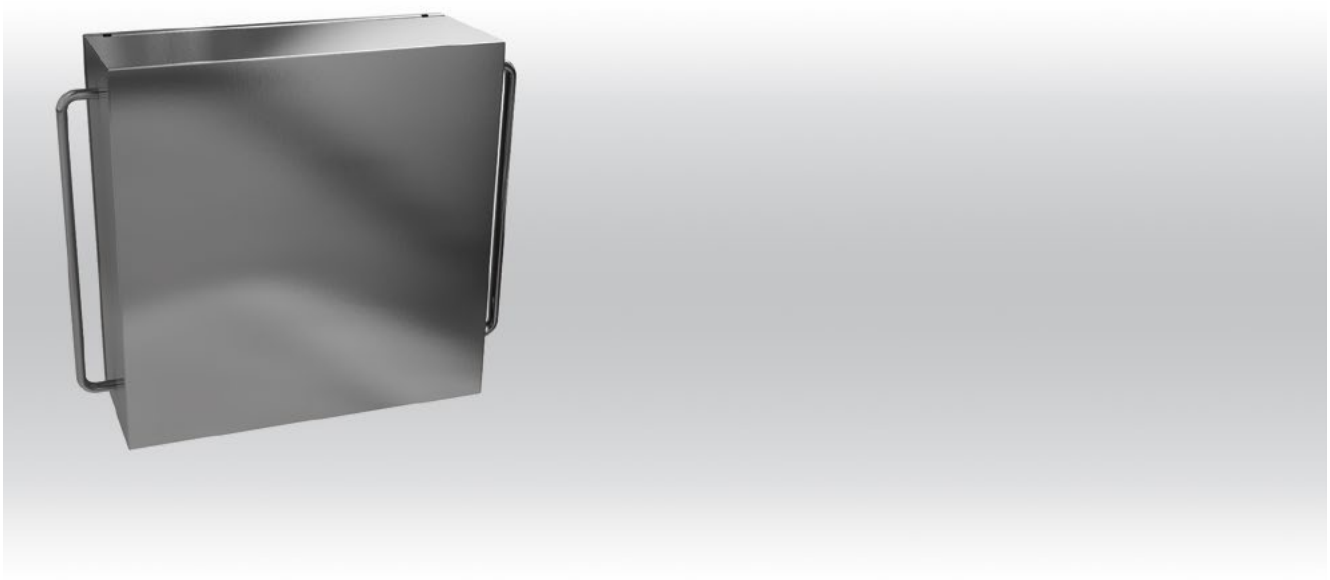

+ Control enclosure in stainless steel 1.4301 (304)
+ Different handle design versions
+ High protection class IP 66
+ Integrated grounding lugs
+ Customized laser processing possible
+ Optional further locking systems made of different materials available (e.g. plastic or zinc die-cast)

Included in delivery

Enclosure including reinforcing plate, couplings hole and handles.

Technical data

Material	Stainless steel 1.4301/304
Surface	grinded, grain 320
Seal	Silicone
Ingress protection	IP 66
Temperature range	-20 °C to +80 °C

Commander 450

Product range

Order No.	Dimensions (mm) W x H x D	Fitting (mm) W x H	Variation	Weight (kg)
56.45 01 01	400 x 300 x 120	300 x 200	with two edge handles (side C/D)	4.21
56.45 01 02	400 x 300 x 120	300 x 200	with two bow handles (side C/D)	5.68
56.45 01 03	400 x 300 x 120	300 x 200	with one bow handle (side B)	5.40
56.45 02 01	400 x 300 x 160	300 x 200	with two edge handles (side C/D)	4.90
56.45 02 02	400 x 300 x 160	300 x 200	with two bow handles (side C/D)	6.37
56.45 02 03	400 x 300 x 160	300 x 200	with one bow handle (side B)	6.09
56.45 03 01	400 x 400 x 160	300 x 300	with two edge handles (side C/D)	7.13
56.45 03 02	400 x 400 x 160	300 x 300	with two bow handles (side C/D)	7.84
56.45 03 03	400 x 400 x 160	300 x 300	with one bow handle (side B)	7.24
56.45 04 01	500 x 300 x 200	400 x 200	with two edge handles (side C/D)	7.49
56.45 04 02	500 x 300 x 200	400 x 200	with two bow handles (side C/D)	8.38
56.45 04 03	500 x 300 x 200	400 x 200	with one bow handle (side B)	8.26
56.45 05 01	500 x 500 x 200	400 x 400	with two edge handles (side C/D)	9.00
56.45 05 02	500 x 500 x 200	400 x 400	with two bow handles (side C/D)	12.00
56.45 05 03	500 x 500 x 200	400 x 400	with one bow handle (side B)	11.00

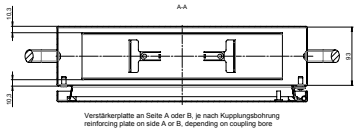

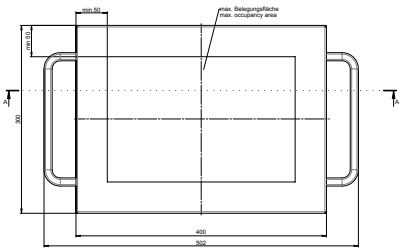

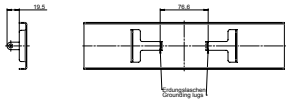

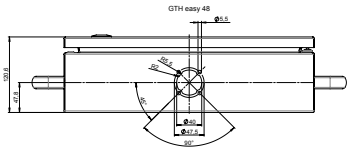







L'IMPULSION
Retrouvez nous sur
www.limpulsion.fr

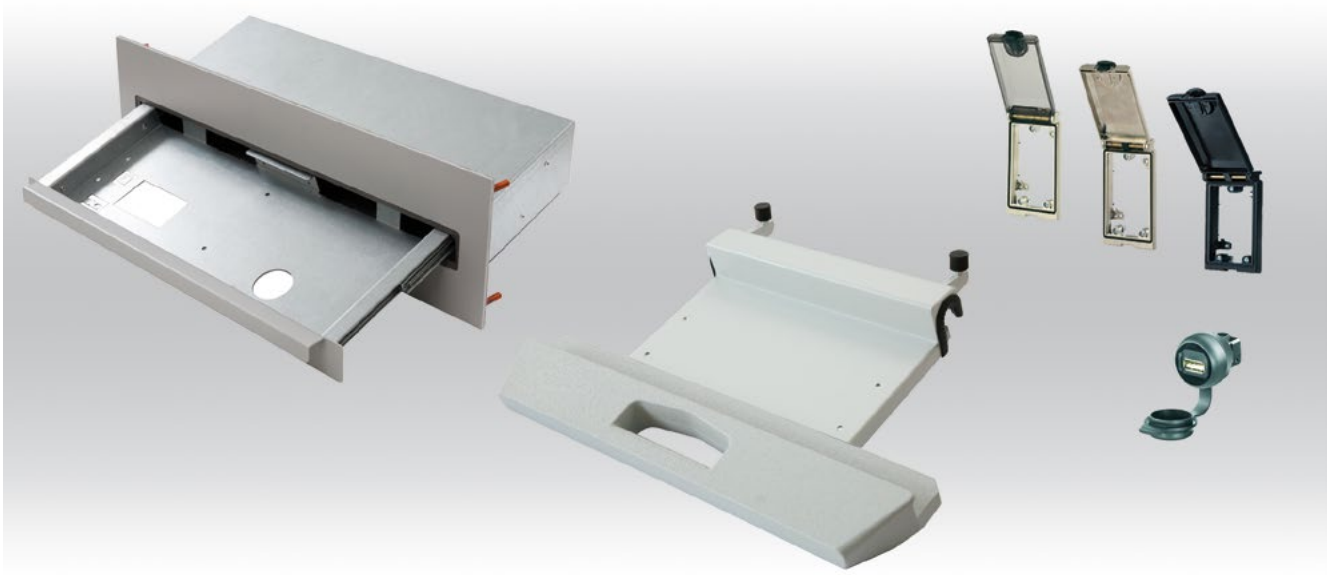

+ Keyboard drawer and keyboard tray
+ Keyboard holder
+ Single and multi interface flaps and flap inserts

Commander system accessories

Keyboard drawer



Installation into command systems:
SL 2000, Profile 3
SL 3000, Profile 3 and 4
SL 4000 Profile 3
optional with keyboard

Order No.	Execution
10.99 20 01	Drawer for keyboards, IP 40 to front side

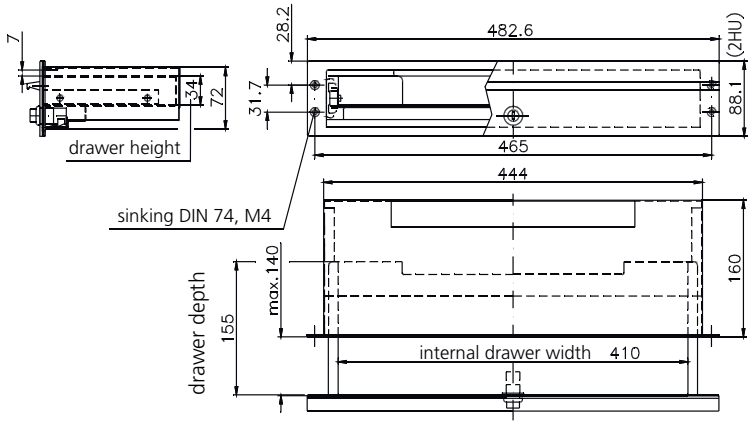

Mousepad rack



Order No.	Execution
10.99 20 02	for keyboard drawer 10.99 20 01

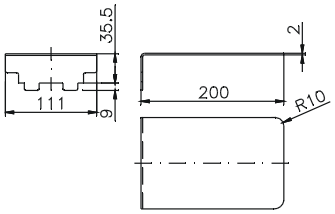

Keyboard drawer RTS3 with 20° inclination



Built-in drawer for keyboards,
IP 65 for the front side
Dimensions: 483 x 132.5 x 150 mm
for keyboards with maximum dimensions 340 x 170 x 20 mm
Drawer with 20° slope with magnetic latch for installing from the front with front panel (RAL 9006, white aluminium) or for installing from the inside of the enclosure
Related keyboard on request

Order No.	Execution
10.99 20 03	Keyboard drawer RTS3-F (inclination 20° with front plate)
10.99 20 04	Keyboard drawer RTS3 (inclination 20° with front plate)

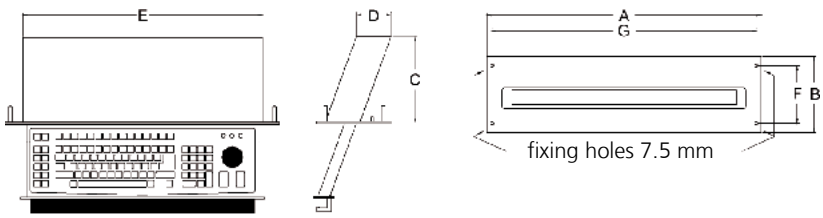

Dimensions (mm)

A	B	C	D	E	F	G
483	132,5	150	61	421	101,5	465

Keyboard drawer RTS 1 (1 HE)



Built-in drawer for keyboards,
IP 65 for the front side
Dimensions: 483 x 44 x 160 mm
for keyboards with maximum
dimensions 370 x 140 x 20 mm
Drawer without slope with
magnetic latch for installing from
the front with front panel (RAL
9006, white aluminium)

Suitable keyboard Cherry
G84-4400LUBDE

Order No.	Execution
10.99 20 11	with front plate

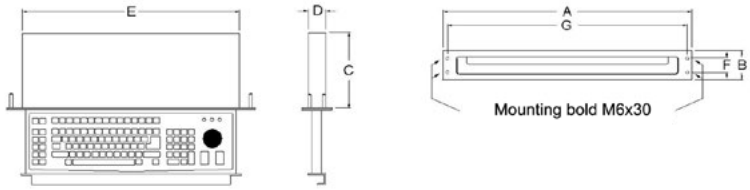

Dimensions (mm)

A	B	C	D	E	F	G
483	44	160	35	421	25	465

Keyboard drawer RTS 2 (2 HE)



Built-in drawer for keyboards,
IP 65 for the front side
Dimensions: 483 x 88 x 150 mm
for keyboards with maximum
dimensions 370 x 140 x 20 mm
Drawer without slope with magnetic
latch for installing from the front
with front panel (RAL 9006, white
aluminium) or for installing from the
inside of the enclosure
Related keyboard on request

Order No.	Execution
10.99 20 13	with front plate

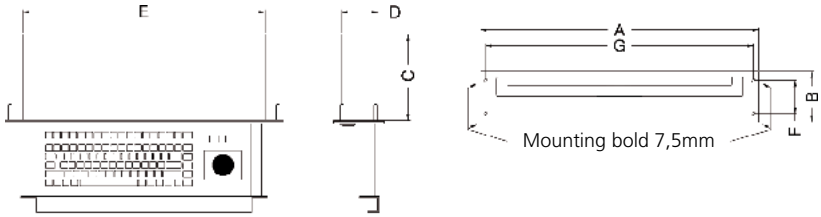

Dimensions (mm)

A	B	C	D	E	F	G
483	88	150	64	421	58	465

Keyboard drawer RTS4



Built-in drawer for keyboards,
IP 65 for the front side
Dimensions: 560 x 123 x 203 mm
for keyboards with maximum dimensions 465
x 170 x 25 mm
Drawer with magnetic latch
Mouse pad tray can be extended to the right
or left
for installing from the front with front panel
(RAL 7035, light grey)
incl. mouse Cherry M5450 and integrated
USB port

suitable keyboard Cherry G-85-23100
DE-2 (German) or Cherry G-85-23100 EU
(English) on request

Order No.	Execution
45.80 10 00	with front plate

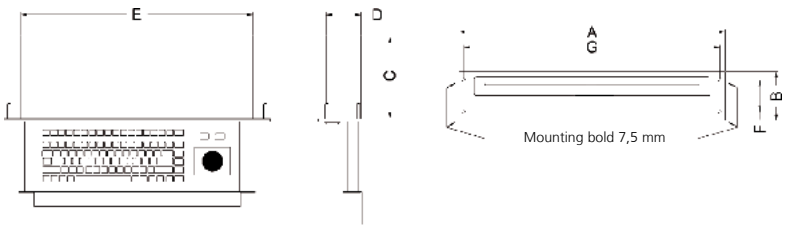

Dimensions (mm)

A	B	C	D	E	F	G
560	123	203	86	512	103	543

Commander system accessories

Keyboard tray, sheet steel, inclination 15°



Order No.	Execution
10.99 20 06	For mounting between suspension system GTN II and GTS onto commander from bottom side (side B)

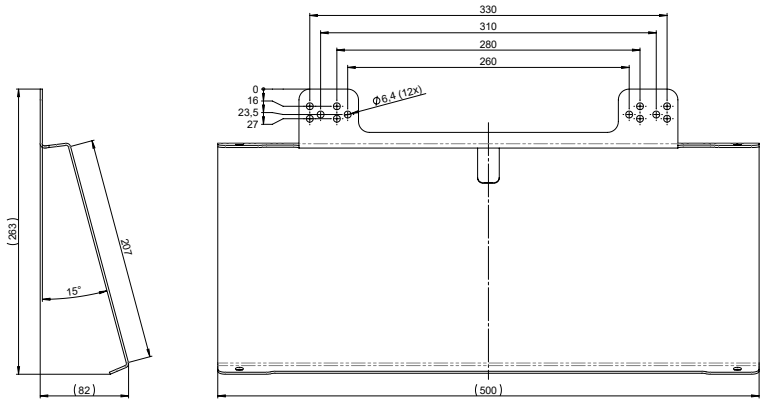

Mousepad rack, for keyboard tray 10.99 20 xx



Order No.	Execution
10.99 20 07	for side mounting onto keyboard tray (right side or left side)

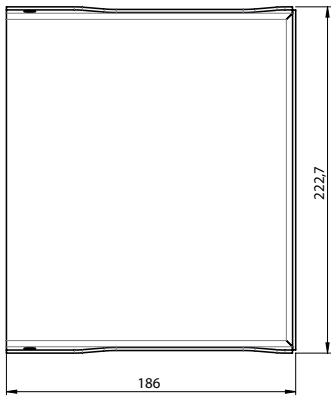

Keyboard holder for SL 2000



Mounting onto SL 2000 with front panel width ≥ 370 mm. With combination onto suspension system at Side B, please note profile depth and swivel range.

Order No.	Execution
19.60 10 04	For standard PC keyboards, consisting of mounting elements and keyboard holder

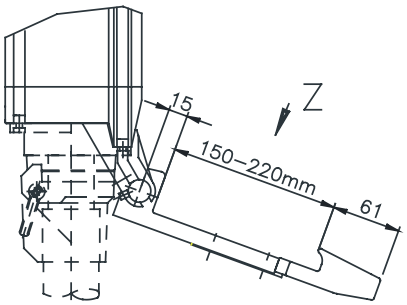

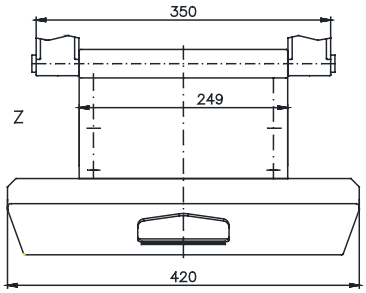

Keyboard holder SL 4000



Mounting onto SL 4000 profile 2 and profile 3; profile 1 only side A (front plate width > 400 mm); keyboard optionally

Order No.	Execution
20.10 90 20	for standard PC keyboards

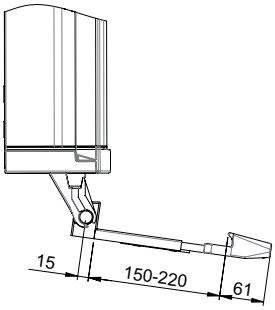

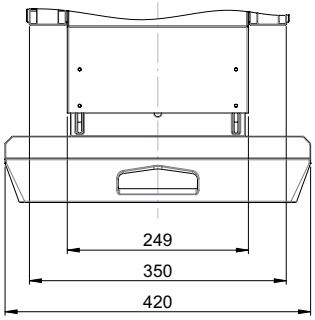

Keyboard holder SL 3000



Mounting onto SL 3000;
Note: only possible with handle mounting on side B

Order No.	Execution
20.10 90 21	for standard PC keyboards

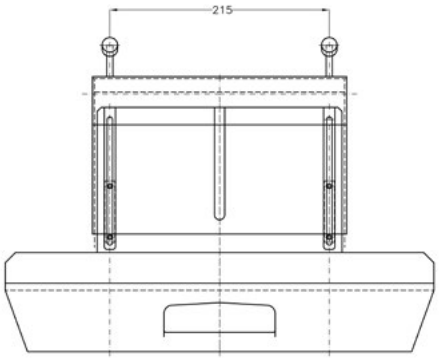

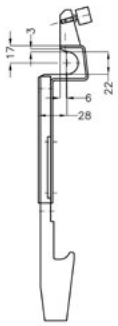

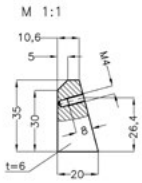

Mousepad support for keyboard holder



Order No.	Execution
20.10 90 22	for side mounting onto keyboard holder 19.60 10 04, 20.10 90 20 and 20.10 90 21

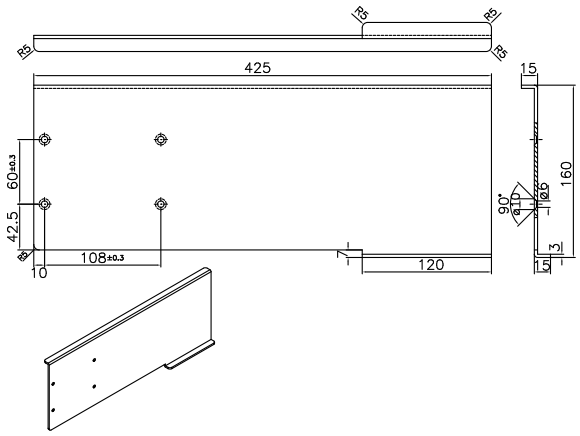

Commander system accessories

Document holder



Order No.	Execution
20.60 10 05	Clipboard for side mounting for Commander systems SL 2000, SL 3000, SL 4000, Comtronic onto side
20.60 10 04	Clipboard for fixing onto tube handle at Commander systems

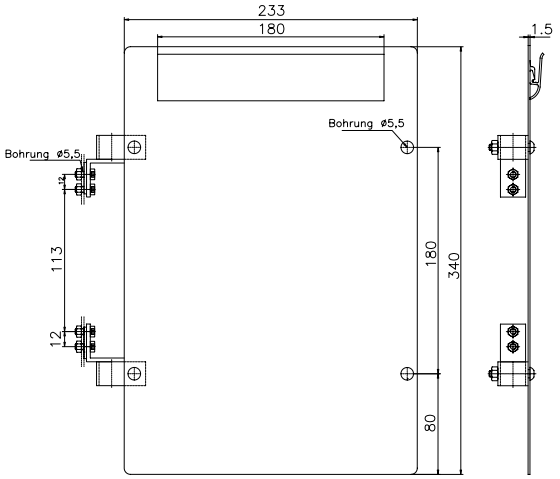

SL 3000 Mousepad rack

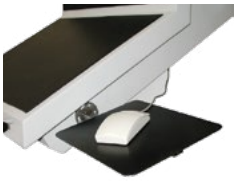

Order No.	
19.60 10 06	For side mounting - colour RAL 9005

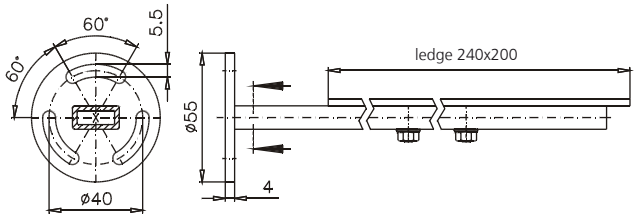

Fixing plates



for mounting components in Commander

Bestell-Nr	Type	Dimensions A
20.10 91 01	for SL 4000 profile 2	97
20.10 91 02	for SL 4000 profile 3	157
20.10 91 03	for SL 4000 profile 4	96,3
20.10 91 99	individual length	

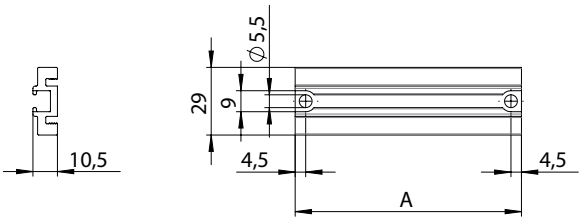

Grounding plate Commander



Order No.	Execution
20.99 00 01	for installation in Commander SL 4000 (profile 1 and 4)

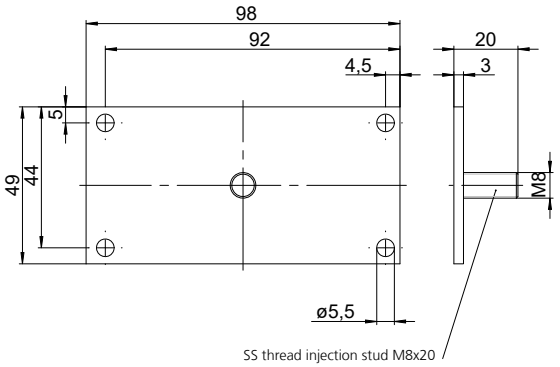

Wall holder set



Order No.	Execution
20.80 90 01	for Comtronic
20.10 90 30	for SL 3000 and SL 4000 profile 2 , 3 and 4

Hinge set



for directly mounting onto wall or machine.
2 hinge incl. screws, colour black

Order No.	Execution
19.60 10 08	for Commander system SL 2000
20.10 90 50	for Commander system SL 4000 profile 1 and 2
20.10 90 60	for Commander system SL 4000 profile 3

Commander system accessories

Inclining system



Continuously variable inclining system (+/- 75°) for Commander systems.
System consisting of aluminium elements with bellow.
Scope of supply: base unit without adaptation plate

Order No.

50.02 01 01

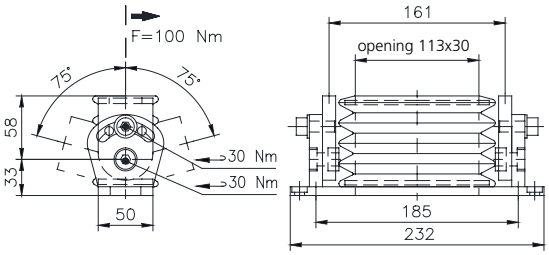

Adapter plate



for connection of inclining system with Commander systems



Order No.	Execution
50.01 02 03	Adapter plate SL 2000 profile 1
50.01 02 04	Adapter plate SL 2000 profile 2
50.01 02 05	Adapter plate SL 2000 profile 3
50.01 02 06	Adapter plate SL 3000 profile 1
50.01 02 07	Adapter plate SL 3000 profile 2 to 4
50.01 02 08	Adapter plate SL 3000 console version
50.01 02 09	Adapter plate universal (s. drawing)
50.01 02 11	ComTronic adapter plate
50.01 02 12	Adapter plate SL 3000 profile 4 (direct mounting)
50.01 02 13	Flat panel adapter
50.01 02 14	Adapter plate SL 4000 profile 1 - 3
50.01 02 15	Adapter plate SL 4000 console version

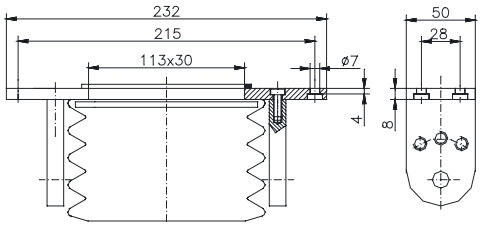

L'IMPULSION | Retrouvez nous sur www.limpulsion.fr

Single interfaces (IP 65) incl. connection cable and plug



Mounting on profile, front plate or rear wall

Order No.	Execution
20.90 10 01	USB-Interface with cable 0,6 m and 1 connector
20.90 10 02	RJ45-Interface with 1 connector
20.90 11 03	USB-Interface without cable
20.90 11 04	RJ45-Interface without cable

Single interface flaps, metal



For data interfaces and electrical socket.
Profile 1/2/3: Rear wall or frontplate
Profile 2/3/4: Sidewise onto profile (Side C/D)

Order No.	Execution
20.90 10 10	Version 1 Frame: Metal, dim nickel plated Lid: Plastic, transparent
20.90 10 11	Version 2 Frame: Metal, dim nickel plated Lid: Metal, dim nickel plated
20.90 10 12	Version 3 Frame: Metal, black Lid: Metal, black

Single interface flaps, plastic



For data interfaces and electrical socket.
Profile 1/2/3: Rear wall or frontplate
Profile 2/3/4: Sidewise onto profile (Side C/D)

Order No.	Execution
20.90 10 14	Version 7 Frame: Plastic, black Lid: Plastic, transparent Lock: 3 mm double ward
20.90 10 15	Version 4 Frame: Plastic, schwarz Lid: Plastic, transparent Lock: Knob
20.90 10 16	Version 8 Frame: Plastic, black Lid: Plastic, metallic silver Lock: 3 mm double ward
20.90 10 17	Version 5 Frame: Plastic, black Lid: Plastic, metallic silver Lock: Knob
20.90 10 18	Version 9 Frame: Plastic, black Lid: Plastic, light grey Lock: 3 mm double ward
20.90 10 19	Version 6 Frame: Plastic, black Lid: Plastic, light grey Lock: Knob

L'IMPULSION
Retrouvez nous sur
www.limpulsion.fr

Double interface flaps, metal



For data interfaces and electrical socket.
Profil 1/2/3: Rear wall or front panel
Profil 2/3/4: sidewise onto profile (Side C/D)

Order No.	Execution
20.90 11 10	Version 11 Frame: Metal, dim nickel plated Lid: Plastic transparent
20.90 11 11	Version 12 Frame: Metal, dim nickel plated Lid: Metal, dim nickel plated
20.90 11 12	Version 13 Frame: Metal, black Lid: Metal, black

Double interface flaps, plastic



For data interfaces and electrical socket.
Profil 1/2/3: Rear wall oder front panel
Profil 2/3/4: Sidewise onto profile (Side C/D)

Order No.	Execution
20.90 11 14	Version 17 Frame: Plastic, black Lid: Plastic, transparent Lock: 3 mm double ward
20.90 11 15	Version 14 Frame: Plastic, black Lid: Plastic, transparent Lock: Knob
20.90 11 16	Version 18 Frame: Plastic, black Lid: Plastic, metallic silver Lock: 3 mm double ward
20.90 11 17	Version 15 Frame: Plastic, black Lid: Plastic, metallic silver Lock: Knob
20.90 11 18	Version 9 Frame: Plastic, black Lid: Plastic, light grey Lock: 3 mm double ward
20.90 11 19	Version 6 Frame: Plastic, black Lid: Plastic, light grey Lock: Knob

Installation components for interface flaps



Order No.	Execution
20.90 11 05	Schuko/FI Germany (VDE) with additional cut-out for earth leakage circuit breaker (can only be used onto double flaps)

L'IMPULSION | Retrouvez nous sur www.limpulsion.fr

Data interfaces



RJ45; USB; SUB-D9; SUB-D9
1 × RJ45, 8-pole. Metal, CAT5e (socket/socket)
1 × USB (socket/socket) Type A
2 × SUB-D9 (socket/socket)

Order No. **20.90 10 66**



RJ45; USB; USB (type A)
1 × RJ45, 8-pole. metal, CAT5e (socket/socket)
2 × USB (socket/socket) Type A

Order No. **20.90 10 59**



RJ45; RJ45
2 × RJ45, 8-pole. Metal, CAT5e (socket/socket)

Order No. **20.90 10 69**



RJ45
1 × RJ45, 8-pole. Metal, CAT5e (socket/socket)
1 × blank cover for SUB-D9

Order No. **20.90 10 70**



RJ45; RJ45; RJ45; RJ45
4 × RJ45, 8-pole. Metal, CAT5e (socket/socket)

Order No. **20.90 10 71**



USB (type A); RJ45
1 × USB (socket/socket) Type A
1 × RJ45, 8-pole. metal, CAT5e (socket/socket)

Order No. **20.90 10 72**



1 × RJ45
8-pole. metal, CAT5e (socket/socket)
1 × USB (socket/socket) Type A
1 × SUB-D9 (socket/pin)

Order No. **20.90 10 74**



RJ45; USB (type A); SUB-D9
1 × RJ45, 8-pole. metal, CAT5e (socket/socket)
1 × USB (socket/socket) Type A
1 × SUB-D9 (socket/socket)

Order No. **20.90 10 75**



USB (type A); USB (type A)
2 × USB (socket/socket) Type A

Order No. **20.90 10 86**



USB; USB; USB; USB (type A)
4 × USB (socket/socket) Type A

Order No. **20.90 10 88**



RJ45; USB; USB (type A)
1 × RJ45, 8-pole. Metal, CAT5e (socket/socket)
2 × USB (socket/socket/0.7 m Kabel) Type A

Order No. **20.90 10 89**



USB (type A); RJ45
1 × USB (Buchse/Buchse/0.7 m Kabel) Type A
1 × RJ45, 8-pole. metal, CAT5e (socket/socket)

Order No. **20.90 10 95**

L'IMPULSION | Retrouvez nous sur www.limpulsion.fr

Commander system accessories

Flap insert: Plug insert



Germany (VDE)
grey, screw clamps, LED (yellow)

Order No. **20.90 10 24**



France (UTE)
screw clamps

Order No. **20.90 10 26**



Italy (CEI 23-16)
with electric shock protection, screw clamps

Order No. **20.90 10 28**



USA (NEMA 5-15)
screw clamps

Order No. **20.90 10 20**



UK (BS)
with electric shock protection, screw clamps

Order No. **20.90 10 25**



China (CCC)
with electric shock protection, screw clamps

Order No. 20.90 10 22



Denmark
spring clamps

Order No. **20.90 10 23**



Switzerland
spring clamps

Order No. **20.90 10 29**



Australia
screw clamps

Order No. **20.90 10 21**



India (IS 1293)
with electric shock protection, screw clamps

Order No. **20.90 10 27**



Germany (VDE)
yellow, spring clamps

Order No. **20.90 11 20**



Germany (VDE)
orange, spring clamps

Order No. **20.90 11 21**

Heat management



+ Climatic systems for ROSE Commander systems, co-ordinated with the application
+ Filter ventilators upto 25 m³/h discharge flow
+ Compressor cooling systems upto 430 W cooling capacity
+ Peltier cooling elements upto 150 W cooling capacity

Included in delivery
Climatic system depending upon execution completely Commander system

Operating and control systems need an eclosure system, which makes an optimal handling possible for the accommodation at the machine in the production process. ROSE offers for this special commander systems. These operating and control systems, usually realized on PC basis, produce a thermal power loss. For the avoidance of the loss of the devices or components and for the securing of the production process air conditioning is necessary. Rose offers here a complete aligned cooling system. With additional heat sinks up to the modern Peltier cooling systems - all options are possible.

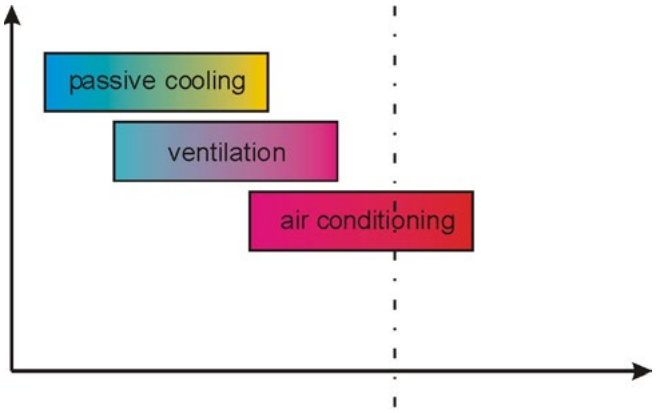

$T_a < T_{imax}$ $T_a = T_{imax}$ $T_a > T_{imax}$

T_a: ambient temperature
T_{imax}: max. permissible interior enclosure temperature

For all our Commander systems we offer particularly devised cooling systems to you:



Passive cooling
with heat sink rear walls

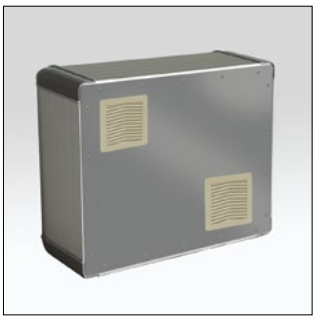

Active cooling
with filter ventilator systems



Active cooling
with compressor cooling systems



Active cooling
with peltier cooling elements

Heat management

Filter ventilators with snatching assembly



Order No.	Type	Name	Nominal voltage	Discharge flow	Weight (g)
83.10 01 01	RLV 100 230 D	Filter ventilator	230 V AC	25 m³/h	520
83.10 01 02	RLV 100 24 D	Filter ventilator	24 V DC	25 m³/h	300
83.10 01 11	RGV 100 D	Exhaust filter		15 m³/h	60

Application and function
for the ventilation of cabinets, operating and control enclosures.
Two versions: for the electrical connection at 24 V DC and to 230 V AC.
The simple assembly takes place by cutout in door, side wall, rear wall or roof of the enclosure.

Advantages
Generally high protection classification (IP 54) by fin mounting.
Short assembly time by simple snatching assembly.
The ventilator used has UL-, CSA-, VDE- and CE-approvals.

Technical data

Material	Enclosure: Plastic
Ingress protection	IP 54
Nominal voltage	24 V DC / 230 V AC

RLV 100 230 D / RLV 100 24 D

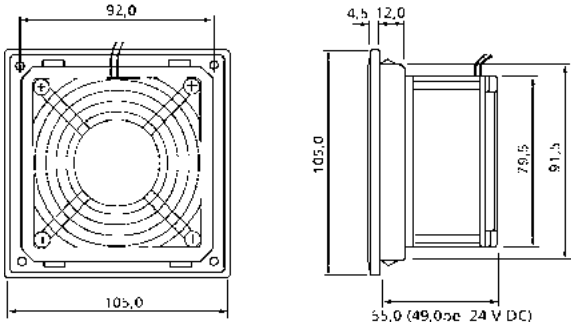

RGV 100 D

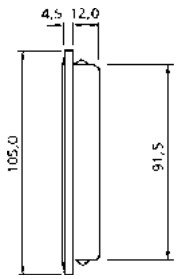

Mounting cutout

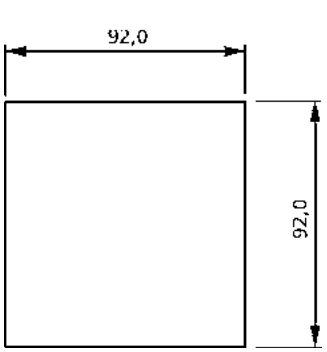

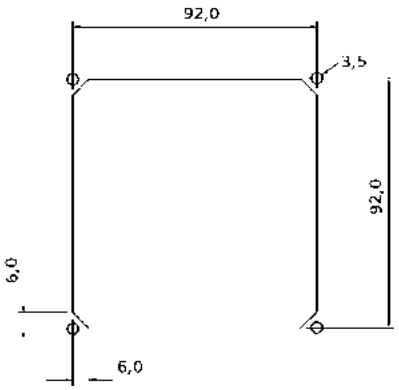

Octagonal cutout and drillings only by screw fastener

Mini cooling systems in Peltier technology



Order No.	Type	Cooling capacity	Nominal voltage	Nominal currency	Weight (g)
83.10 03 01	RPK 50	50 W	24 V DC	2,5 A	3280
83.10 03 02	RPK 100	100 W	24 V DC	4,8 A	6800
83.10 03 03	RPK 150	150 W	24 V DC	6,5 A	3280

Application and function:
for the active cooling of cabinets, operating and controll enclosures, industrial PC´s, monitor and flat screen monitor.
3 types in 50, 100 and 150 W cooling capacity are available.
For the electrical connection at 24 V DC. The simple assembly takes place by cutout in door, side wall, rear wall or roof of the enclosure.

Advantages of
Peltier cooling units:
- compact design
- assembly in each position, because the units work without refrigerants
- high efficiency

The Peltier effect
The Peltier effect is a thermoelectrical procedure, where a semiconductor material is used which is caused with appropriate doting by current guidance the change of the energy state by charge carriers and thus used to the transport of heat.

Technical data

Operating temperature	-10 °C to +60 °C
Nominal current	24 V +6%/-10%
Ingress protection inside/outside	IP 54

Computation of the necessary cooling performance:

$P_K = P_v - k \times A \times T$

P_K =	Necessary cooling performance (W)
P_v =	Dissipation loss of built in devices (W)
k x A x T =	Inner convection of device
k =	Thermal transmission coefficient (eg: sheet metal = 5.5 W / m² K)
A =	Usable enclosure area (m²)
$\Delta T = T_i - T_a$ =	Temperature difference between inner and surrounding temperature

Heat management

RPK 50

Diagram

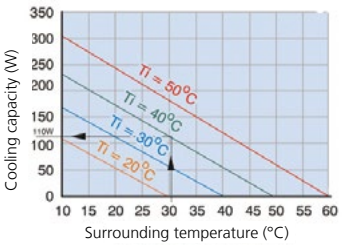

Choise: P_K = 6 W/K x ΔT + 50 W
Example: T_a = 30°C, T_i = 40°C d.h.: P_K = 110 W

Dimensions

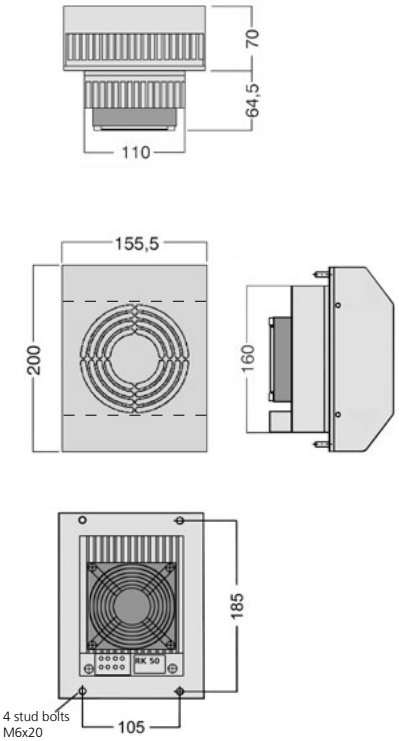

Mounting cutout

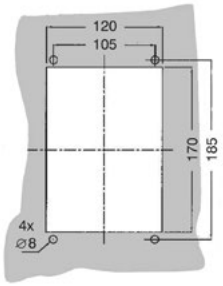

RPK 100

Diagram

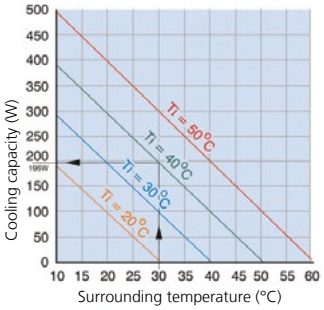

Choise: P_K = 9,5 W/K x ΔT +100 W
Example: T_a = 30°C, T_i = 40°C d.h.: P_K = 195 W

Dimensions

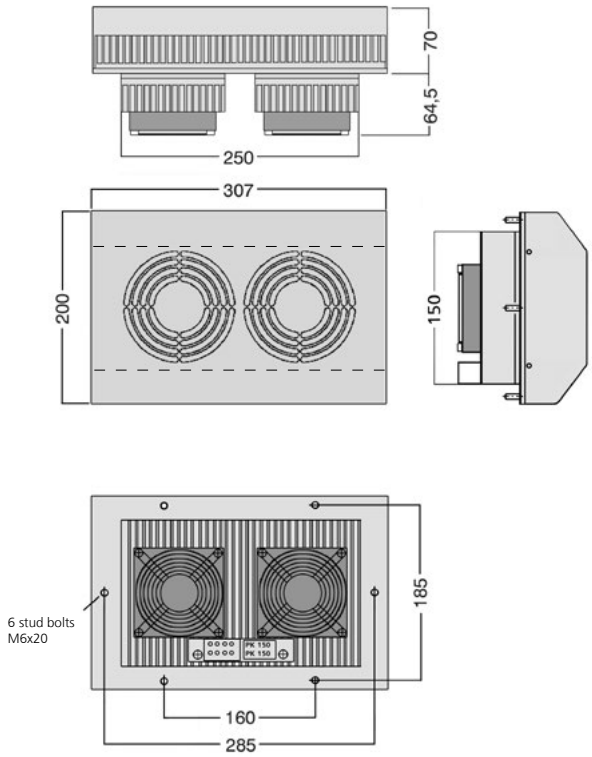

Mounting cutout

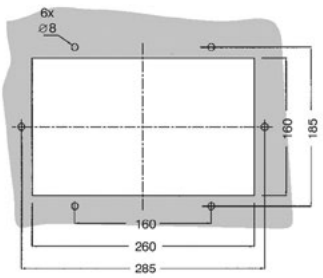

RPK 150

Diagram

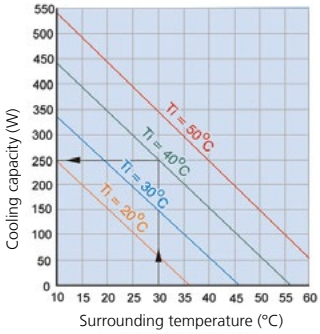

Choise: P_K = 9,5 W/K x ΔT + 150 W
Example: T_a = 30°C, T_i = 40°C d.h.: P_K = 245 W

GTK electronic

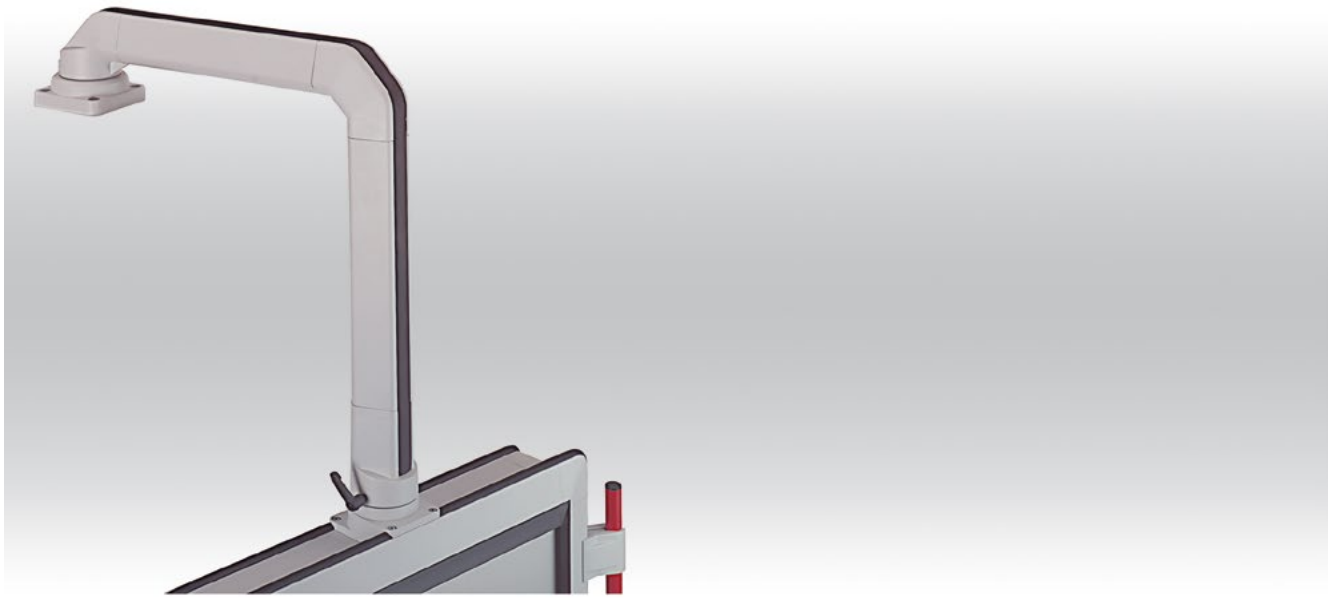

+ Industrial suspension system for control enclosures
+ Modular construction with free accessible cable channel
+ Wall, top-mounting or floor fixing

Included in delivery

Individual system components incl. cable channel covering and assembly materials

Technical data

Material	Connecting tube: DIN EN 573 EN AW-AlMgSi Components: DIN EN 1706 EN AC-AlSi 12 (Fe) Cover profile: TPE
Painting	Powder coating
Colour	Tube and components in RAL 7035, lightgrey Cover profile: RAL 9005, jet black
Ingress protection	IP 54 to EN 60529

GTK electronic

Product range

Type	Order No.	Weight (g)
Top-mounted joint	**49.45 66 00**	1430
Foot stand	**49.45 72 00**	538
Wall hinge W	**49.45 70 00**	2250
Angle	**49.45 71 00**	533
Coupling	**49.45 73 00**	521
Coupling GTKe-PRO	**49.45 73 02**	1010
Flange coupling	**49.45 77 00**	957
Angle coupling	**49.45 75 00**	882
Angle coupling GTKe-PRO	**49.45 75 02**	1270
Flange angle coupling	**49.45 78 00**	1017
Spare cover profile 2.5 m	**49.45 69 00**	206
Adapter plate GTKe-PRO	**49.45 00 01**	175

Aluminium profile, max. outreach 1.5 m

Connecting tube	Order No.	Weight (g)
Standard length: 0,5 m	**49.45 10 01**	1625
Standard length: 1 m	**49.45 10 02**	3250
Standard length: 2 m*	**49.45 10 03**	6500
Variable length (please specify)		

without threaded hole

Adaptation capability, using elements from GT 48/2 range*

	Order No.	Weight (g)
Console flange 30°	**49.49 76 00**	400
Adapter flange	**49.49 79 00**	1500
Inclination adapter	**49.49 80 00**	800

* Special colour RAL 7035 please specify when ordering.

Load diagram

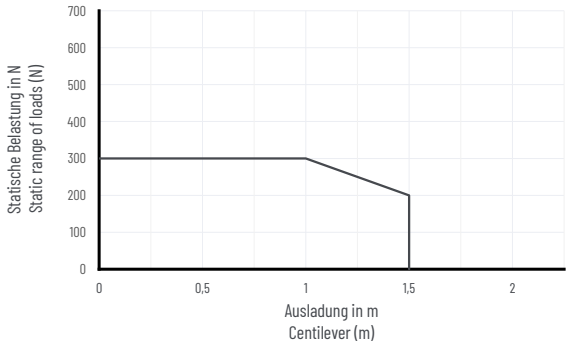

Note: the vertical length of the profile is responsible for the load of the complete suspension system (lever arm!).
Further information for this on request. The values in the above load diagram are gulty to an execution hanging or standing.
The declarations of weight are a summary from
- installation weight,
- Commander weight
- and all components and tubes between Commander and angle.

System structure

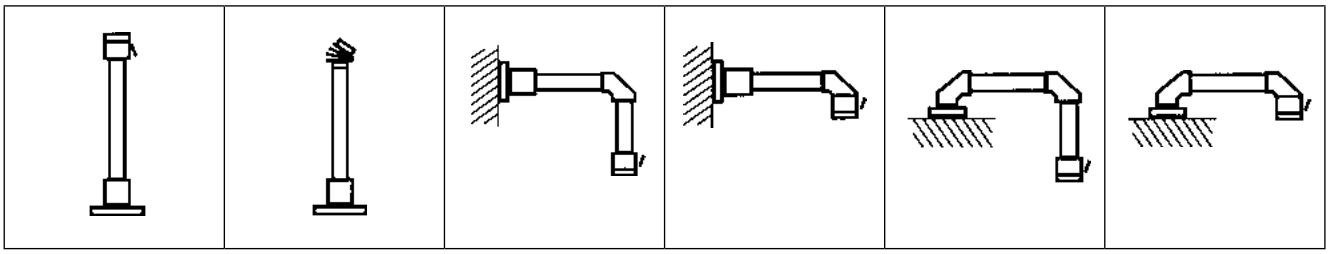

Components

Top-mounted joint



Order No.	Execution
49.45 66 00	Cast aluminium with steel inner tube and flange mounting. Swivelling range 330° (cannot be limited or stopped)

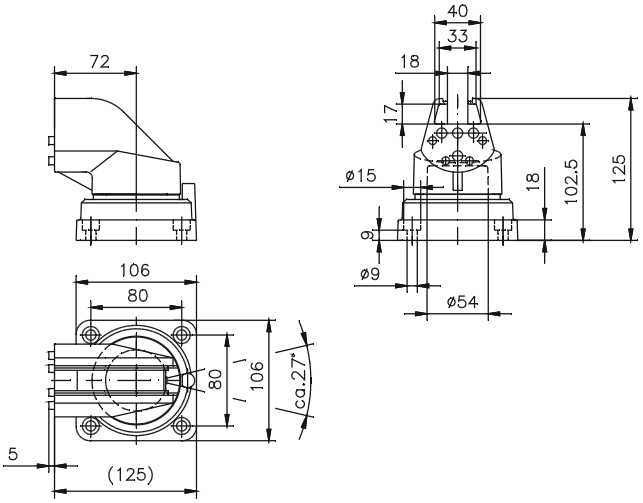

Wall hinge



Order No.	Execution
49.45 70 00	Cast aluminium with steel inner tube and plain bearing Swivelling range 330° (cannot be limited or stopped)

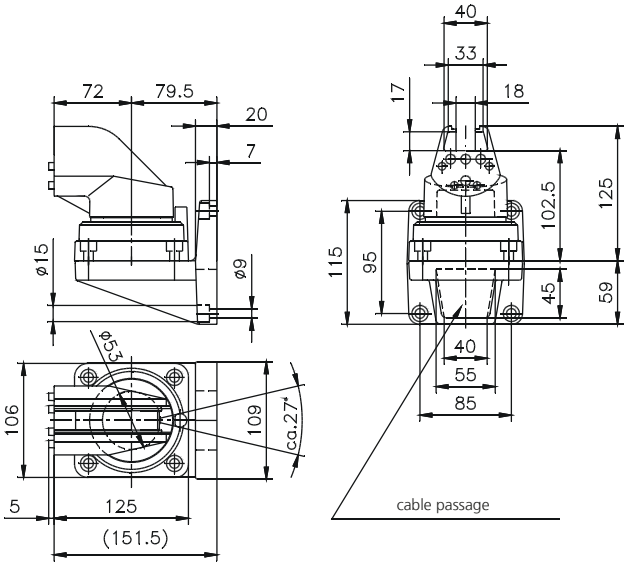

Angle



Order No.	Execution
49.45 71 00	Cast aluminium, angle 90°

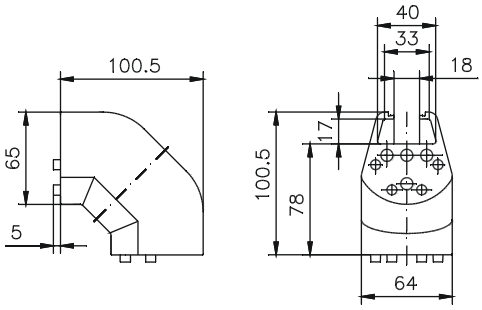

GTK electronic

Components

Connecting tube



Order No.	Execution
49.45 10 01	0,5 m Aluminium extruded profile incl. plastic cover profile
49.45 10 02	1 m Aluminium extruded profile incl. plastic cover profile
49.45 10 03	2 m Aluminium extruded profile incl. plastic cover profile

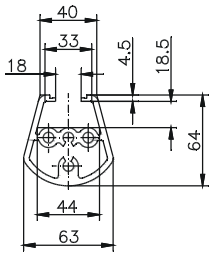

Coupling



Order No.	Execution
49.45 73 00	Cast aluminium with internal steel tube. Swivelling range 290°

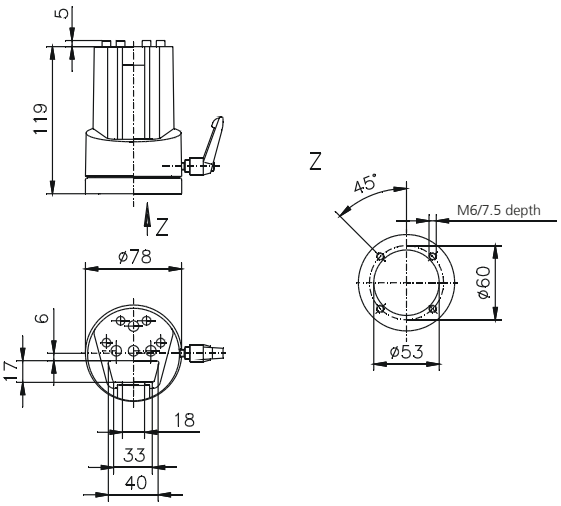

Coupling für Siemens Pro



Order No.	Execution
49.45 73 02	for direct connection to Siemens Pro devices. Swivelling range 290°

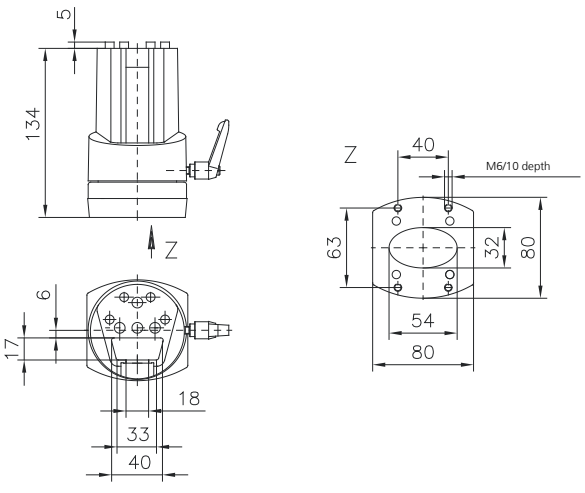

Components

Angle coupling



Order No.	Execution
49.45 75 00	Combination of angle and coupling for horizontal tube exit. Cast aluminium with steel inner tube. Swivelling range 290°

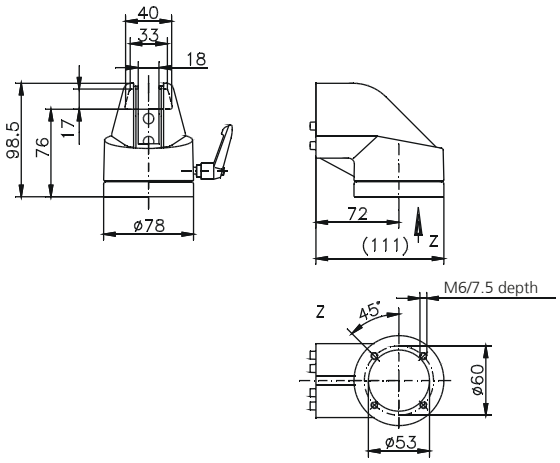

Angle coupling for Siemens Pro



Order No.	Execution
49.45 75 02	for direct connection to Siemens Pro commander units Combination of angle and coupling for horizontal tube exit. Cast aluminium with steel inner tube. Swivelling range 290°

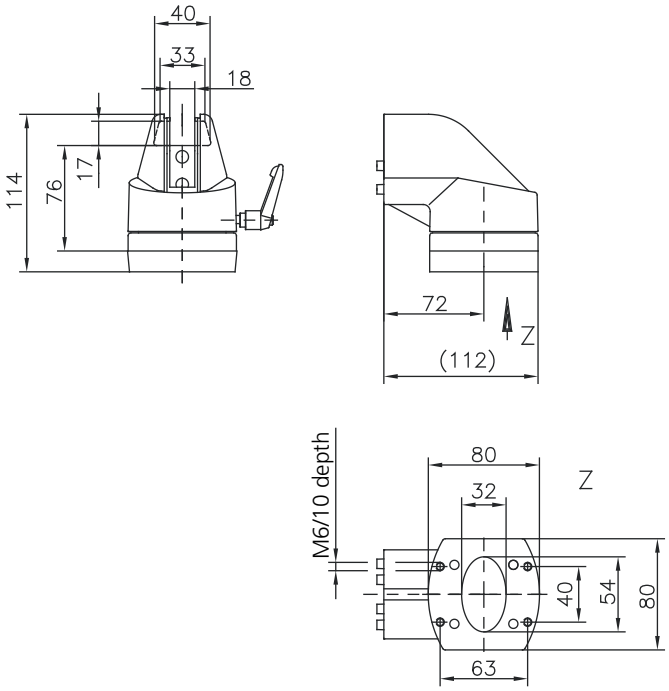

GTK electronic

Components

Flange coupling



Order No.	Execution
49.45 77 00	Cast aluminium with internal steel tube. Swivelling range 290°

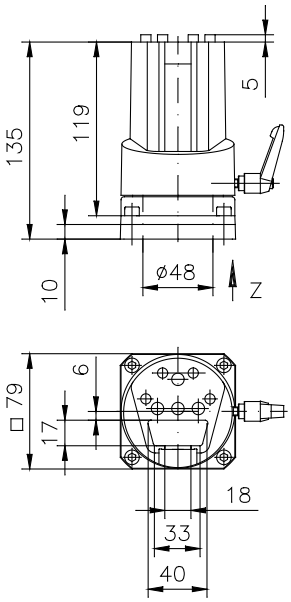

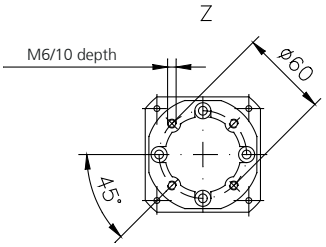

Flange angle coupling



Order No.	Execution
49.45 78 00	Combination of angle and coupling for horizontal tube exit. Cast aluminium with internal steel tube. Swivelling range 290°

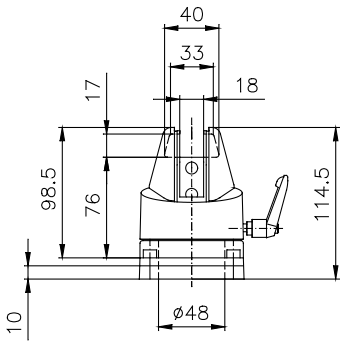

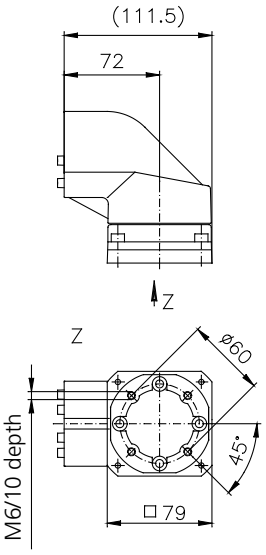

Components

Foot stand



Order No.	Execution
49.45 72 00	Cast aluminium, fixed version

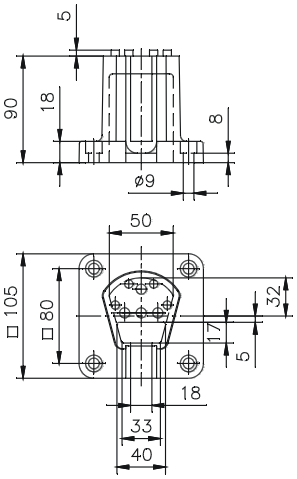

Adapter plate GTKe-Pro



Order No.	Execution
49.45 00 01	Adapter plate for connecting GTK electronic elements with Siemens Pro-command units (not necessary for coupling GTKe Pro and angle coupling GTKe Pro)

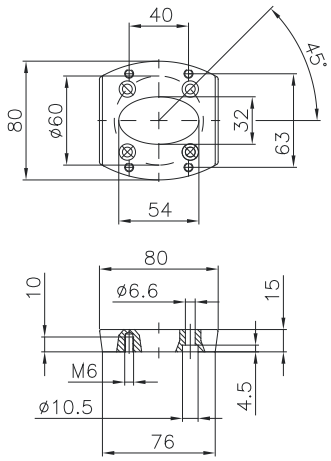

GTS



+ Aluminium profile suspension system for light/medium loads up to 30 kg
+ Product family GTS / GTN / GTL
+ Can be combined with all Commander systems
+ Standardly adjustable solution for individual loads

Included in delivery
System individual components incl. cable duct cover and assembly material.

Technical data

Material	Connecting tube: DIN EN 573 EN AW-AlMgSi Components: DIN EN 1706 EN AC-AlSi 12 (Fe)
Painting	Powder coating
Colour	Tube, components: RAL 7035, light grey
Ingress protection	IP 54 to EN 60529

Product range

Type	Order No.	Weight (g)
Top-mounted joint	**49.44 66 00**	1560
Foot stand	**49.44 72 00**	300
Foot stand turnable	**49.44 72 21**	872
Wall hinge W	**49.44 70 00**	2400
Wall hinge S	**49.44 70 30**	1720
Angle	**49.44 71 00**	783
Angle GTS / GT 48/2	**49.44 71 49**	1100
Coupling	**49.44 73 00**	569
Coupling 15°, combination of coupling and console flange 15°	**49.44 73 76**	891
Flange coupling	**49.44 77 00**	901
Angle coupling	**49.44 75 00**	1260
Angle coupling, combination of angle coupling and console flange 15°	**49.44 75 76**	1550
Inclining adapter	**49.44 80 00**	950
Coupling Siemens PRO	**49.44 73 02**	820
Angle coupling Siemens PRO	**49.44 75 02**	1480
Adapter plate Siemens Pro	**49.44 00 01**	198
Coupling DN, combination of coupling and inclining adapter	**49.44 62 00**	1600

Aluminium profile, max. outreach 1.5 m	Order No.	Weight (g)
GTS Profile, painted RAL 7035, 0.5 m	**49.44 10 01**	1570
GTS Profile, painted RAL 7035, 1 m	**49.44 10 02**	3110
GTS Profile, painted RAL 7035, 2 m*	**49.44 10 03**	6210
Variable length (please specify)	**49.44 10 99**	
Aluminium profile, max. outreach 1.5 m		
GTS Profile anodized 0,5 m	**49.44 11 01**	1570
GTS Profile anodized 1 m	**49.44 11 02**	3110
GTS Profile anodized 2 m*	**49.44 11 03**	6210
GTS Profile anodized, variable length (please specify)	**49.44 99 99**	

* without threaded hole

Load diagram

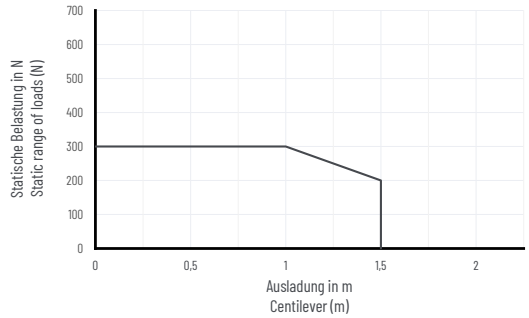

Note: the vertical length of the profile is responsible for the load of the complete suspension system (lever arm!).
Further information for this on request. The values in the above load diagram are gulty to an execution hanging or standing.
The declarations of weight are a summary from installation weight, Commander and all components and tubes between Commander and angle.

System structure

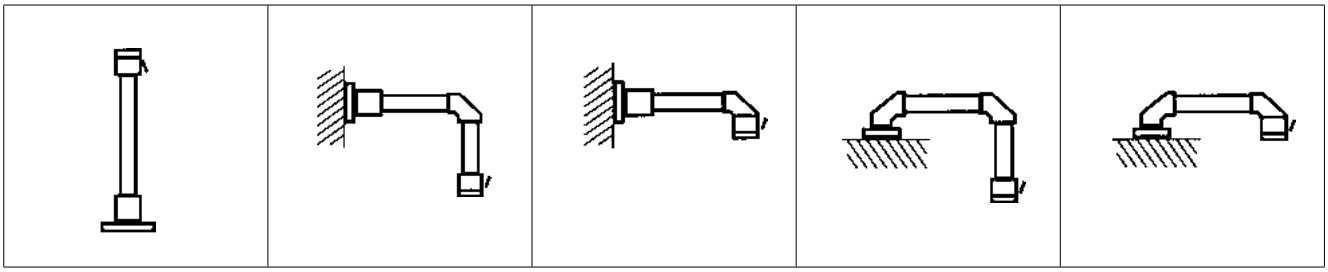

GTS

Components

Top-mounted joint



Order No.	Execution
49.44 66 00	Cast aluminium with flange mounting. Swivelling range to 330°

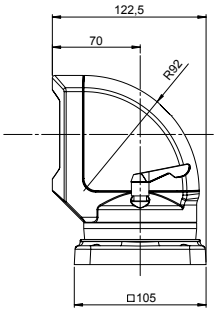

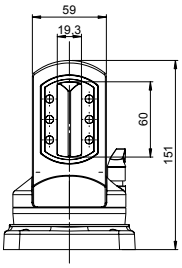

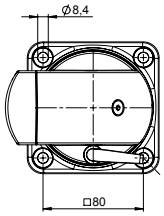

Wall hinge W



Order No.	Execution
49.44 70 00	Cast aluminium with plain bearing. Lockable via clamping lever. Swivelling range 330°

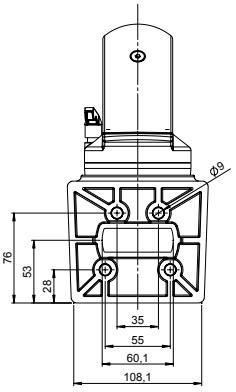

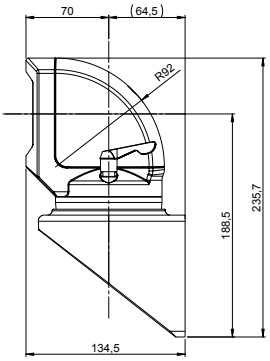

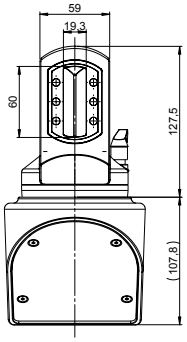

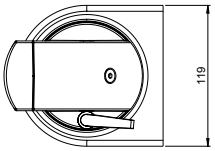

Components

Wall hinge S



Order No.	Execution
49.44 70 30	Cast aluminum with plain bearing. Lockable via clamping lever. Version for vertical profile outlet. Swivelling range 330°

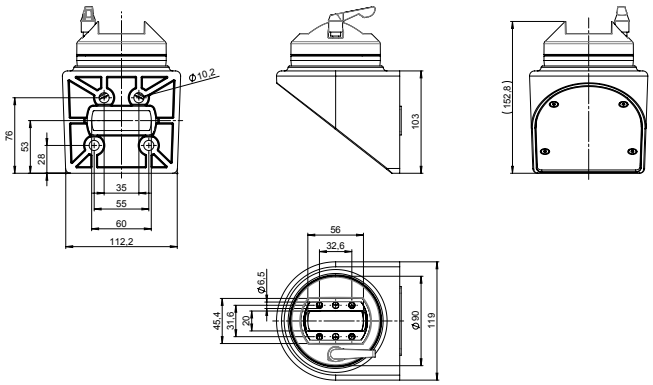

Angle



Order No.	Execution
49.44 71 00	Cast aluminium, angle 90°, incl. lid

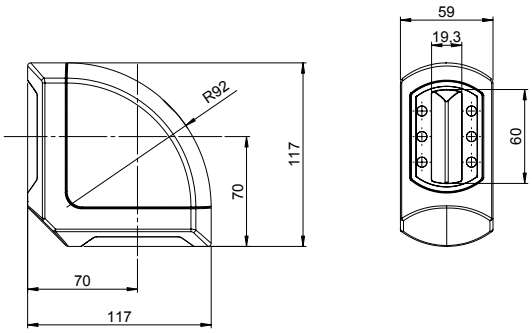

Angle GTS / GT48/2



Order No.	Execution
49.44 71 49	for combination GTS and ø48 Round tube system

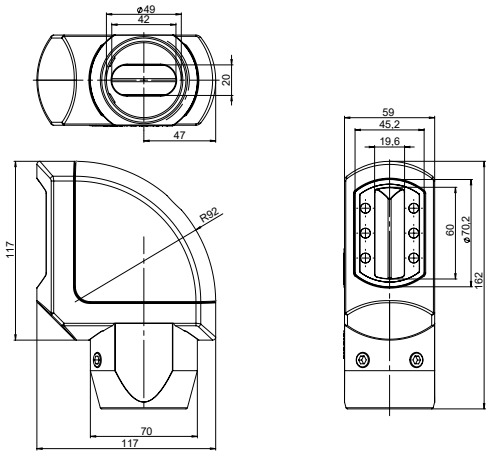

GTS

Components

Foot stand



Order No.	Execution
49.44 72 00	Cast aluminium, fixed version, for floor mounting or wall mounting with rigid outlet

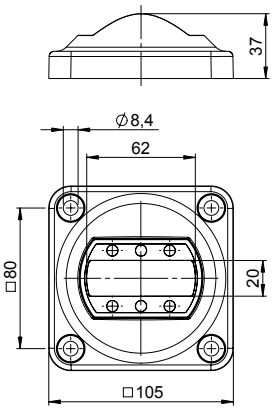

Foot stand turnable



Order No.	Execution
49.44 72 21	Cast aluminium with adjustable stop for direct connection onto machine and command unit

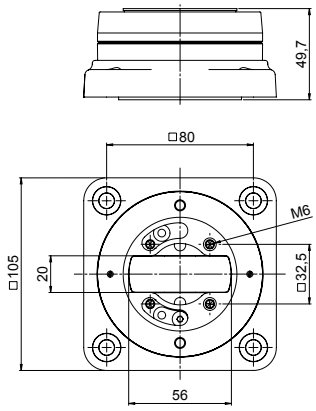

Components

Profile, RAL 7035



Order No.	Execution
49.44 10 01	0.5 m Aluminium extrusion profile
49.44 10 02	1 m Aluminium extrusion profile
49.44 10 03	2 m Aluminium extrusion profile
49.44 10 99	Aluminium extrusion profile, variable length (please specify)

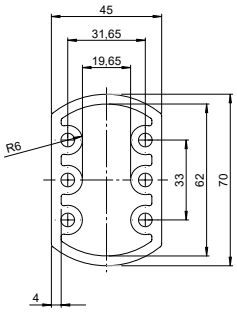

Profile, anodized



Order No.	Execution
49.44 11 01	0.5 m Cast aluminium extrusion profile
49.44 11 02	1 m Cast aluminium extrusion profile
49.44 11 03	2 m Cast aluminium extrusion profile
49.44 11 99	Cast aluminium extrusion profile, variable length (please specify)

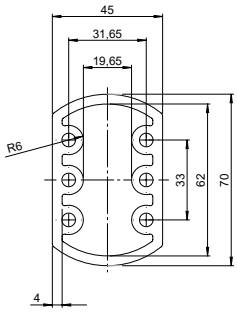

Coupling



Order No.	Execution
49.44 73 00	Cast aluminium, Swivelling range 330°. Lockable with clamping lever.

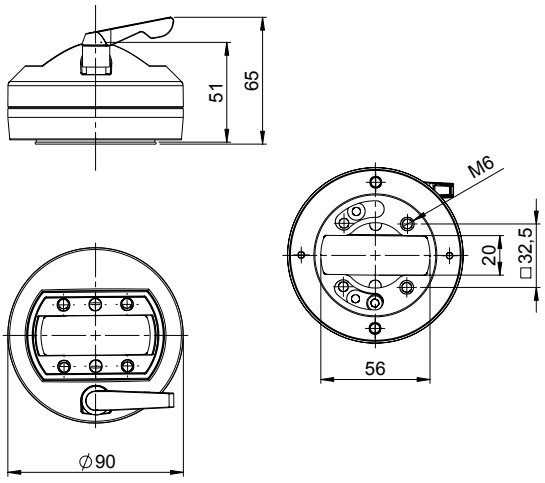

GTS

Components

Coupling Siemens Pro



Order No.	Execution
49.44 73 02	For direct connecting of Siemens PRO command units. Diecast aluminium, coupling mounting onto Siemens base adaption; Swivelling range 330°. Lockable with clamping lever.

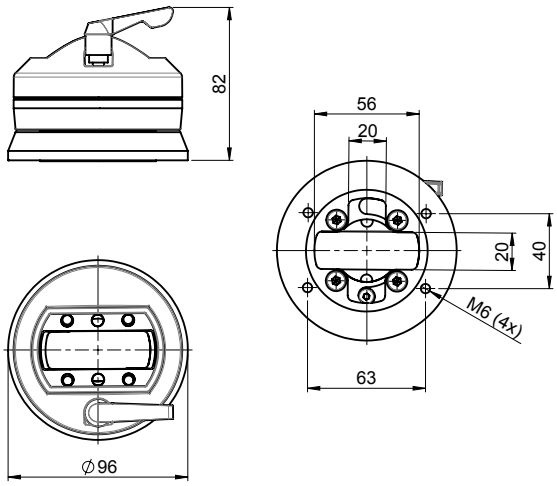

Flange coupling



Order No.	Execution
49.44 77 00	Diecast aluminium with adjustable stop position between machine and control panel. Lockable with clamping lever.

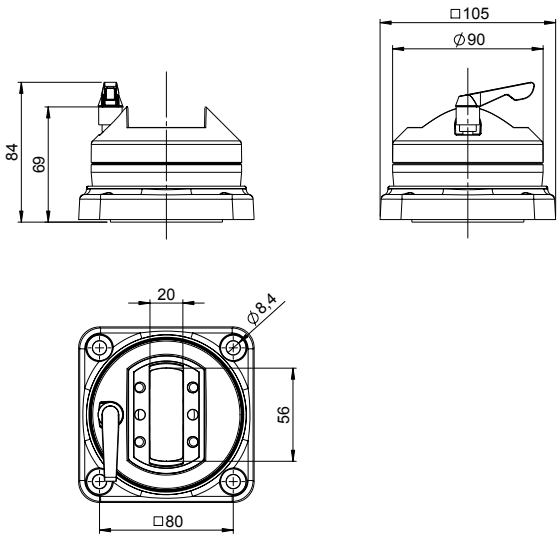

Components

Angle coupling



Order No.	Execution
49.44 75 00	Combination of angle und coupling for horizontal tube exit. Diecast aluminium, Swivelling range 330°. Lockable with clamping lever.

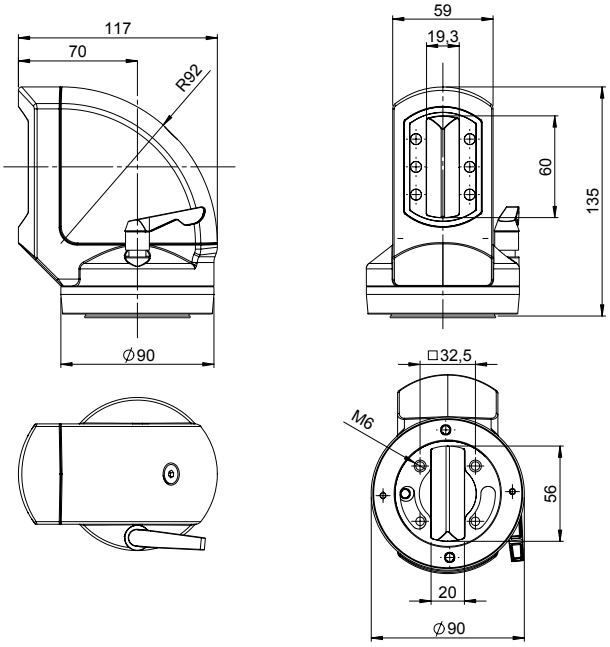

Angle coupling Siemens Pro



Order No.	Execution
49.44 75 02	For direct connecting of Siemens PRO command units. Diecast aluminium, coupling mounting onto Siemens baseadaption; Swivelling range 330°. Lockable with clamping lever.

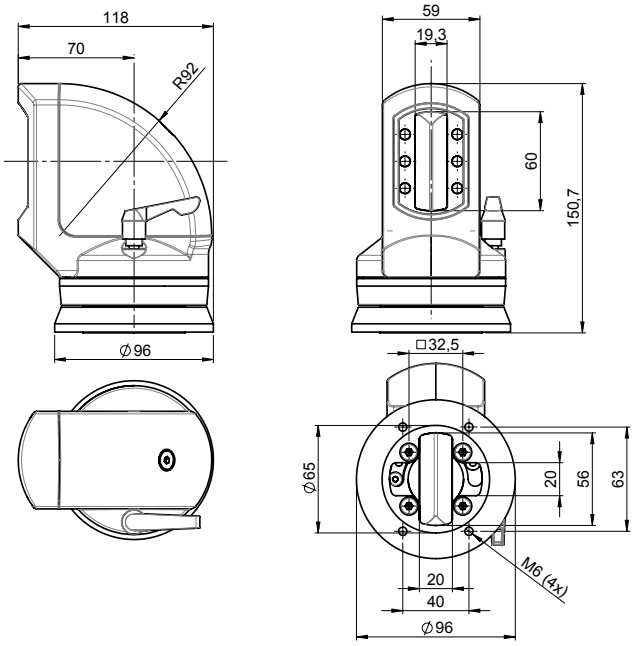

GTS

Components

Angle coupling, combination of angle coupling and console flange 15°



Order No.	Execution
49.44 75 76	Combination of angle und coupling for horizontal tube exit. Diecast aluminium, Swivelling range 330°, Lockable with clamping lever, including 15° Inclining.

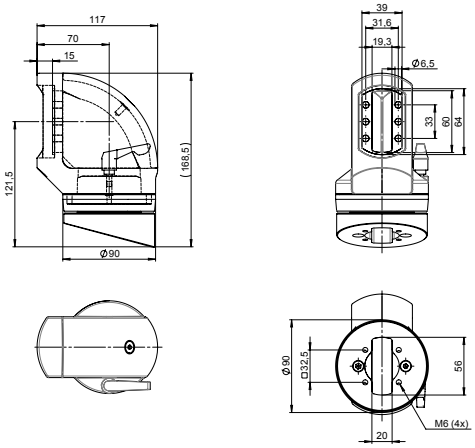

Adapter plate Siemens Pro



Order No.	Execution
49.44 00 01	For connecting GTS system components (e.g. inclining adapter) with Siemens PRO command units (with GTS coupling Siemens PRO and GTS angle coupling Siemens Pro not necessary)

Inclining adapter



Order No.	Execution
49.44 80 00	Diecast aluminium element with bellows and gasket. Inclining range from 0° to 45° continously adjustable. Fixing with screws between enclosure and coupling. max. loading: 25 kg

Components

Base connection element for suspension systems, command units and cabinets



Order No.	Execution
49.00 01 01	Signal light adaptation with thread M20x1.5 mm
49.00 01 02	Signal light adaptation with thread M22x1.5 mm

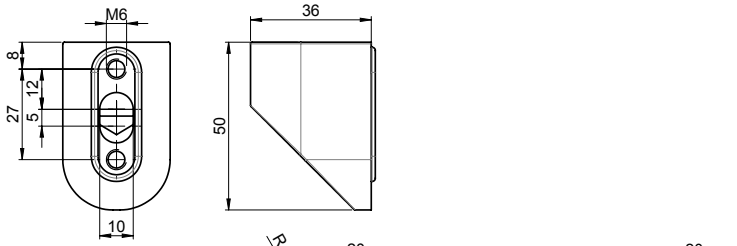

49.00 01 01 **49.00 01 02**

Base connection element for suspension systems, command units and cabinets



Order No.	Execution
49.00 01 03	Signal light adaption with tube Ø 25 mm, length = 250 mm
49.00 01 04	Signal light adaption with tube Ø 25 mm, length = 150 mm

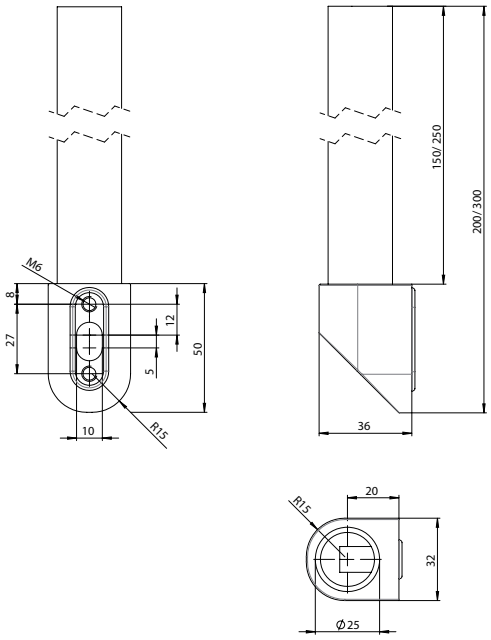

GTN II



+ Design aluminium suspension system
+ Closed profile system
+ profile with free accessible cable duct
+ Can be combined with all control enclosures
+ Optionally with continuous potential equalization

Included in delivery
System individual components incl. cable duct cover and assembly material.

Technical data

Material	Tube: DIN EN 573 EN AW-AlMgSi Components: DIN EN 1706 EN AC-AlSi 12 (Fe) Cover profile: TPE
Painting	Powder coating
Colour	Tube, components: RAL 7035, light grey Cover profile: RAL 9005, jet black
Ingress protection	IP 54 to EN 60529

Product range

Type	Order No.	Weight (g)
Top-mounted joint	**49.47 66 00**	5300
Top-mounted joint light*	**49.47 66 01**	5300
Top-mounted joint (ceiling mounting)	**49.47 66 20**	5300
Vertical top-mounted joint	**49.47 66 30**	4830
Wall hinge	**49.47 70 00**	6150
Wall hinge light*	**49.47 70 01**	6150
Wall hinge hanging	**49.47 70 20**	6150
Vertical Wall hinge	**49.47 70 30**	6060
Angle	**49.47 71 00**	1130
Angle GTN II / GTK electronic	**49.47 71 45**	1760
Angle GTN II / GTS	**49.47 71 44**	1860
Angle GTN II / GT 48/2	**49.47 71 49**	2030
Coupling	**49.47 73 00**	1780
Coupling GTN II-PRO	**49.47 73 02**	2190
Coupling fixed	**49.47 73 03**	1220
Angle coupling	**49.47 75 00**	2740
Angle coupling GTN II-PRO	**49.47 75 02**	3500
Angle coupling	**49.47 75 49**	5300
Intermediate joint "Z"	**49.47 67 00**	6520
Intermediate joint "Z" light*	**49.47 67 01**	6520
Intermediate joint "S"	**49.47 67 02**	6520
Intermediate joint "S" light*	**49.47 67 03**	6520
Foot stand fixed	**49.47 72 00**	1220
Foot stand turnable with adapter plate	**49.47 72 20**	3630
Foot stand turnable	**49.47 72 21**	2320
Foot stand turnable with adapter plate light*	**49.47 72 22**	3590
Console flange 15°	**49.47 76 00**	708
Column, length max. 2.0 m (please specify individual length)	**49.47 00 04**	special length
Spare cover profile 2,5 m	**49.45 69 00**	206
Adjustment set	**49.47 00 06**	58
Inclining adapter	**49.47 80 00**	2320
Adapter plate GTN II-PRO	**49.47 00 01**	469
Height adjustment unit GTN II / GT 48/2	**49.47 30 01**	
Height adjustment slide hanging	**49.47 30 02**	14000
Height adjustment slide standing	**49.47 30 03**	13000

* light: can be used for control units with low load (up to 30 kg/2 m) with lower swivel force.

Aluminium profile	Profile open	Weight (g)	Profile closed	Weight (g)
Standard length: 0,5 m	**49.47 10 01**	3060	**49.47 20 01**	2710
Standard length: 1 m	**49.47 10 02**	6140	**49.47 20 02**	5420
Standard length: 2 m	**49.47 10 03**	12000	**49.47 20 03**	11000
Variable length (please specify)	**49.47 10 99**		**49.47 20 99**	
Profile anodized				
Standard length: 0,5 m	**49.47 11 01**	3070	**49.47 21 01**	2710
Standard length: 1 m	**49.47 11 02**	6140	**49.47 21 02**	5420
Standard length: 2 m	**49.47 11 03**	12000	**49.47 21 03**	11000
Variable length (please specify)	**49.47 11 99**		**49.47 21 99**	

GTN II

Load diagram

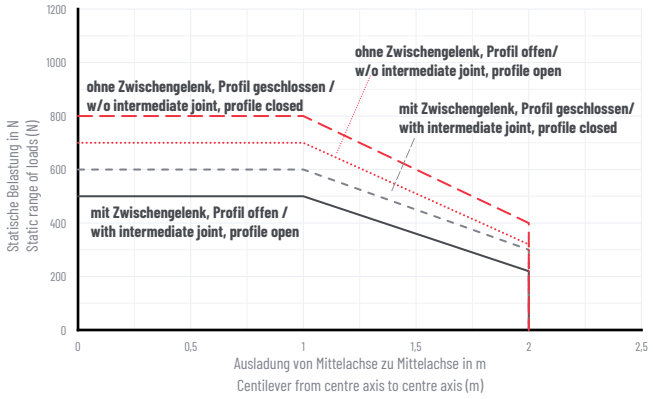

With intermediate joint max. tube length:
Profile closed:
- 1.5 m distance between wall hinge, top mounted
  joint and intermediate joint or
- 1.5 m distance between angle and intermediate joint
Complete length max. 2 m

Profile open:
- 1.0 m distance between wall hinge, top mounted
  joint and intermediate joint or
- 1.0 m distance between angle and intermediate joint
Complete length max. 2 m

Note: the vertical length of the profile is responsible for the load of the complete suspension system (lever arm!).
Further information for this on request. The values in the above load diagram are gulty to an execution hanging or standing.
The declarations of weight are a summary from installation weight, Commander and all components and tubes between Commander and angle.

System structure

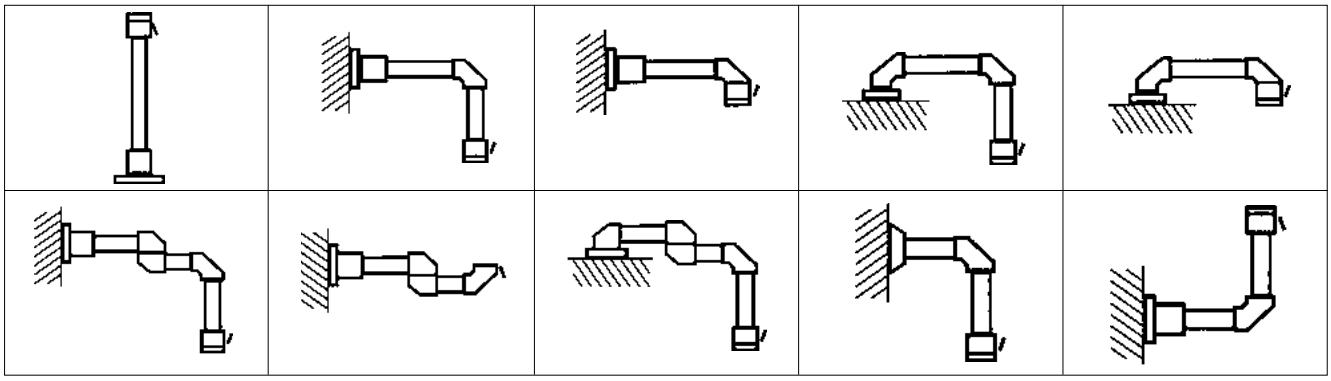

Komponenten

Vertical wall hinge



Order No.	Execution
49.47 70 30	GTN II, vertical wall hinge, profile length 250 mm

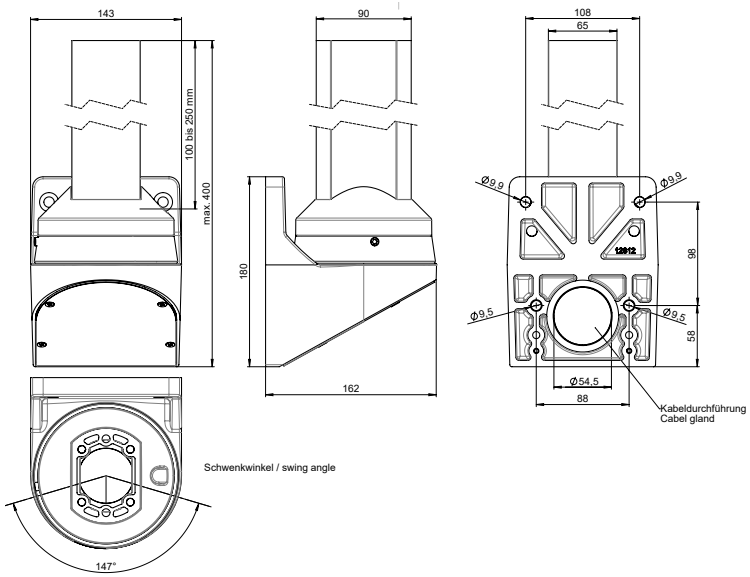

Components

Vertical Top-mounted joint



Order No.	Execution
49.47 66 30	GTN II, vertical Top-mounted joint, profile length 250 mm, swivelling range 327°

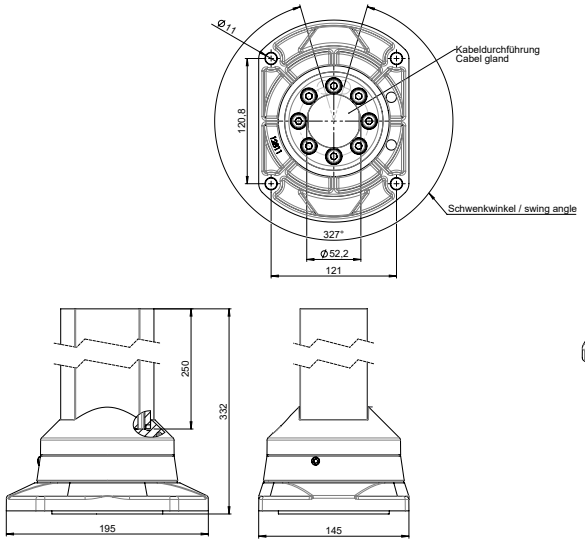

Top-mounted joint



Order No.	Execution
49.47 66 00	GTN II, diecast aluminium, swivelling range 310. Lockable with adjustment screw.
49.47 66 01	GTN II light, diecast aluminium, swivelling range 310°

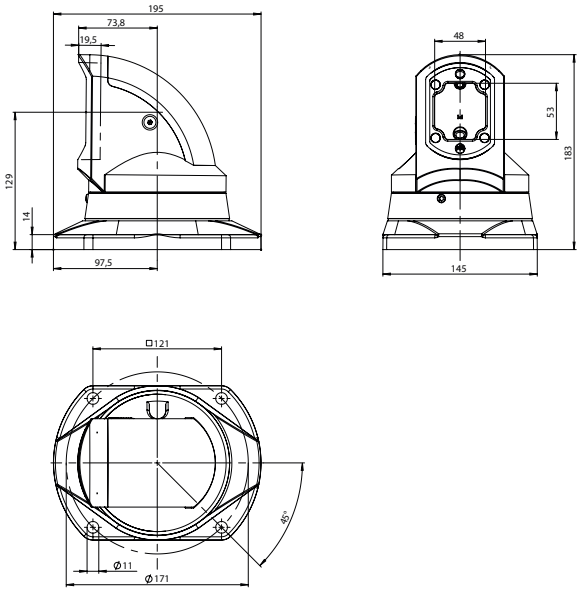

GTN II

Components

Wall hinge



Order No.	Execution
49.47 70 00	GTN II, diecast aluminium, swivelling range 230°. Lockable with adjustment screw.
49.47 70 01	GTN II light, diecast aluminium, swivelling range 230°. Lockable with adjustment screw.
49.47 70 20	GTN II hanging, diecast aluminium, swivelling range 230°. Lockable with adjustment screw.

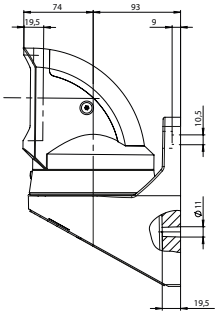

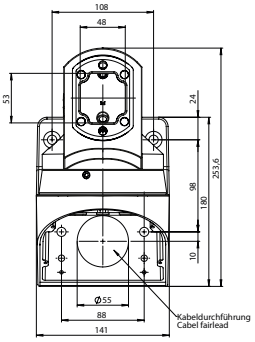

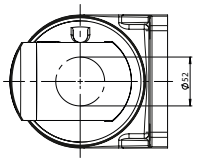

Angle



Order No.	Execution
49.47 71 00	Diecast aluminium, angle 90°

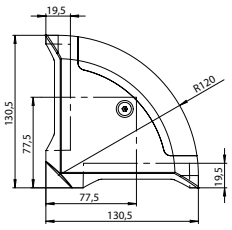

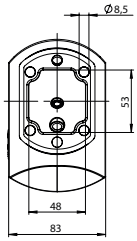

Angle GTN II / GTK electronic



Order No.	Execution
49.47 71 45	For combination GTN II and GTK electronic

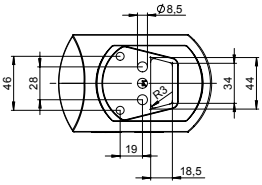

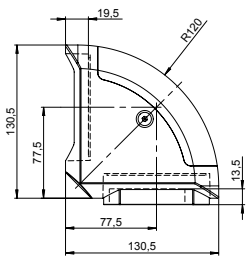

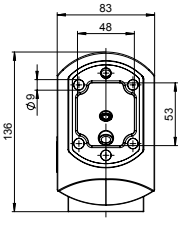

Components

Angle GTN II / GTS

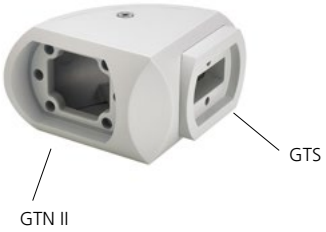

Order No.	Execution
49.47 71 44	For combination GTN II and GTS

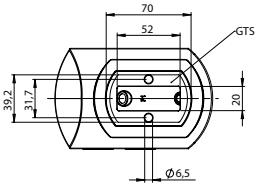

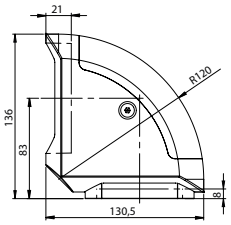

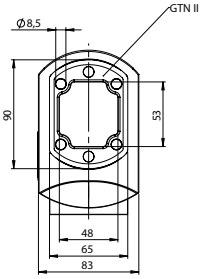

Angle GTN II / GT 48/2



Order No.	Execution
49.47 71 49	For combination GTN II and ø48mm round tube system

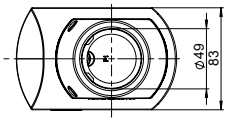

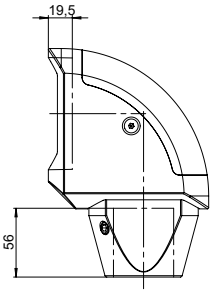

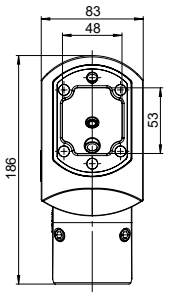

Coupling



Order No.	Execution
49.47 73 00	Diecast aluminium, swivelling range 330°. Lockable with clamping lever.

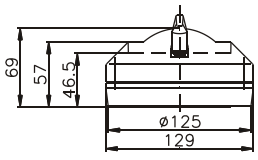

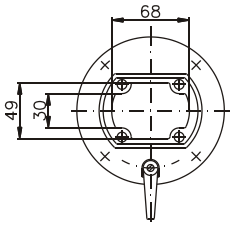

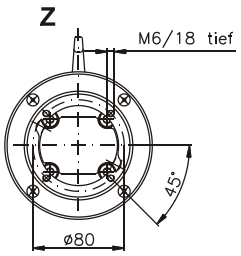

GTN II

Components

Coupling fixed



Order No.

49.47 73 03	Diecast aluminium, fixed version

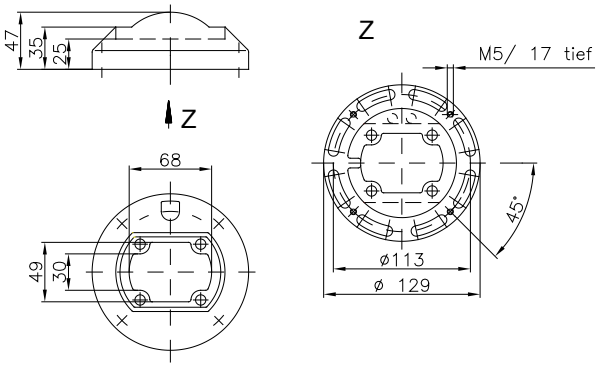

Angle coupling



Order No. Execution

49.47 75 00	Diecast aluminium, swivelling range 320°. Lockable with clamping lever.

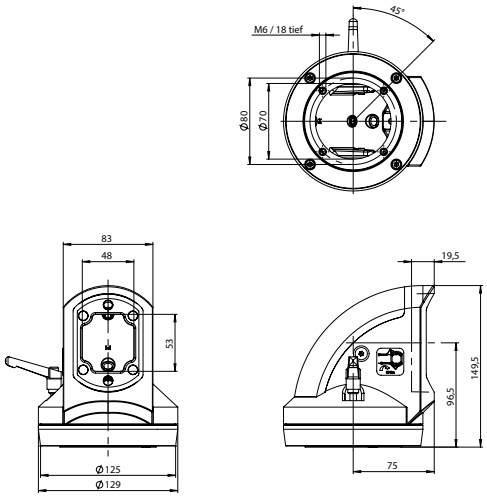

Coupling GTN II-PRO



Order No. Execution

49.47 73 02	For direct connecting of Siemens Pro command units diecast aluminium, swivelling range 330°. Lockable with clamping lever.

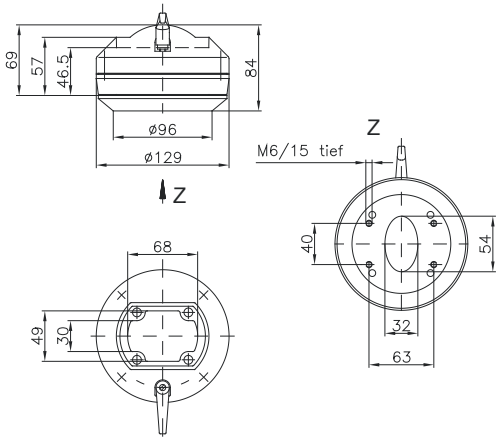

Components

Intermediate joint



Order No.	Execution
49.47 67 00	GTN II „Z", diecast aluminium, swivelling range 310°. Lockable with adjustment screw.
49.47 67 01	GTN II „Z" light, diecast aluminium, swivelling range 310°. Lockable with adjustment screw.
49.47 67 02	GTN II „S", diecast aluminium, swivelling range 310°. Lockable with adjustment screw
49.47 67 03	GTN II „S" light, diecast aluminium, swivelling range 310°. Lockable with adjustment screw.

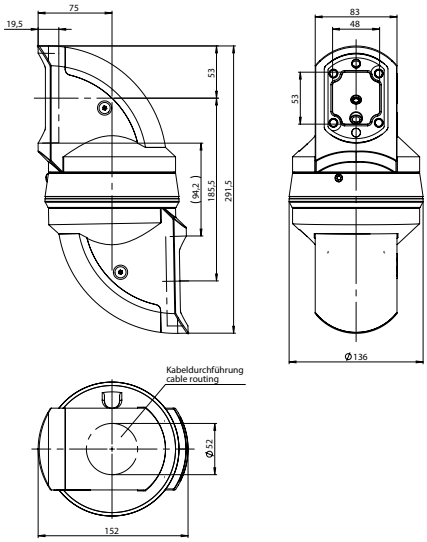

Intermediate joint S-Type

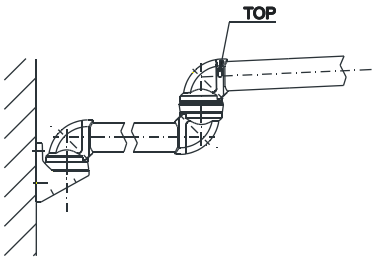

Intermediate joint Z-Type

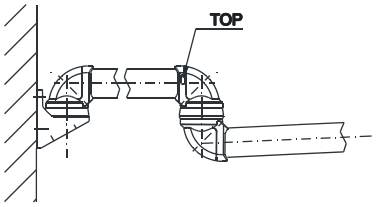

Angle coupling



Order No.	Execution
49.47 75 49	GTN II, Angle Coupling GT 48/2

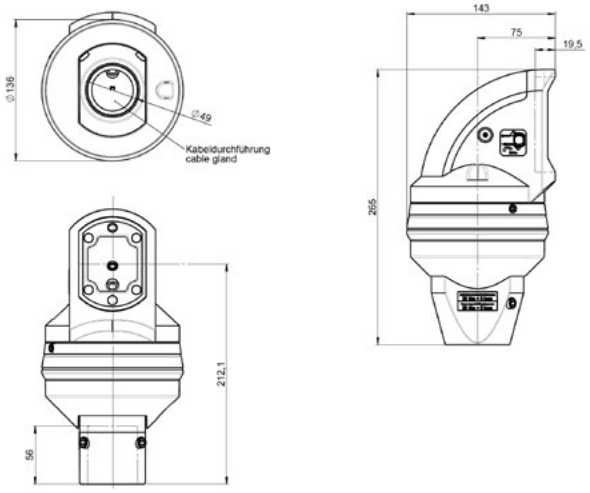

GTN II

Components

Angle coupling GTN II-PRO



Order No.	Execution
49.47 75 02	for direct connecting of Siemens Pro command units Cast aluminium, Swivelling range 320°. Lockable with clamping lever.

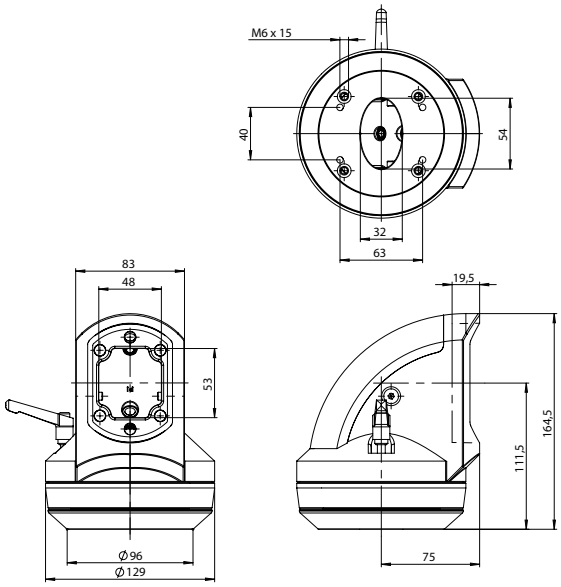

Adapter plate GTN II-PRO



Order No.	Execution
49.47 00 01	for connecting GTN II elements with Siemens Pro command units (not relevant for coupling GTN II Pro and angle coupling GTN II Pro)

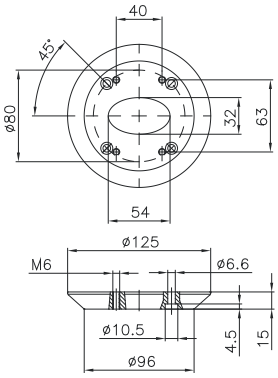

Foot stand fixed



Order No.	Execution
49.47 72 00	Diecast aluminium, fixed version, for ground mounting or wall mounting

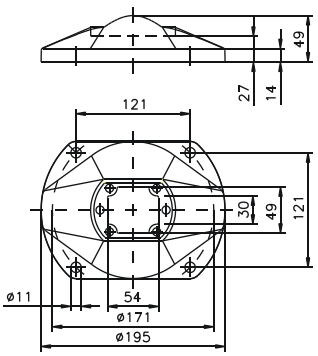

Components

Foot stand turnable with adapter plate



Order No.	Execution
49.47 72 20	Diecast aluminium with adjustable stop position between machine and control panel for the combination of directly with commander, **not with profile**

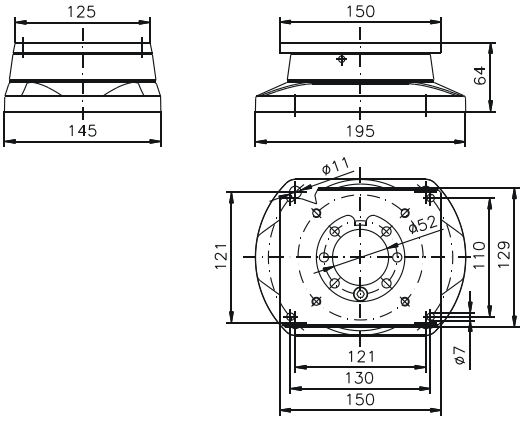

Foot stand turnable



Order No.	Execution
49.47 72 21	Diecast aluminium with adjustable stop position between machine and control panel for the combination of directly with commander, **not with profile**

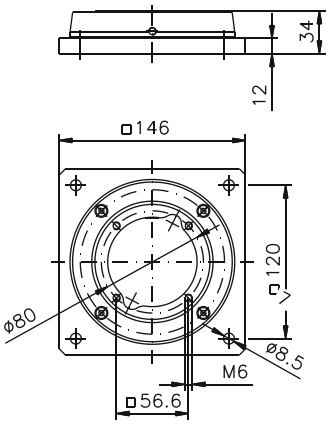

Console flange 15°



Order No.	Execution
49.47 76 00	Aluminium flange with 15° inclination

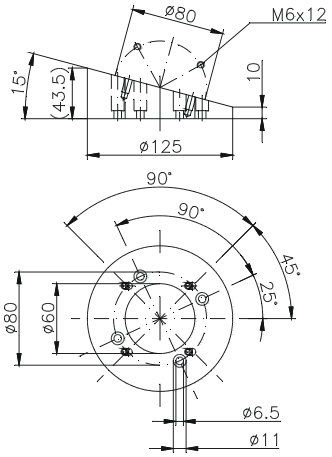

GTN II

Components

Column



Order No.	Execution
49.47 00 04	Steel, painted, length individually up to 2 m, including adapter plate for GTN II top mounted joint, at bottom side flange outlet (specify total length)

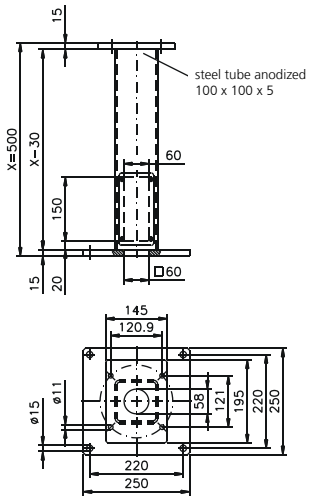

Inclining adapter



Order No.	Execution
49.47 80 00	Diecast aluminium part with bellow and seal, inclination can be adjusted to any angle between 0° and 45°. max. loading: 40 kg

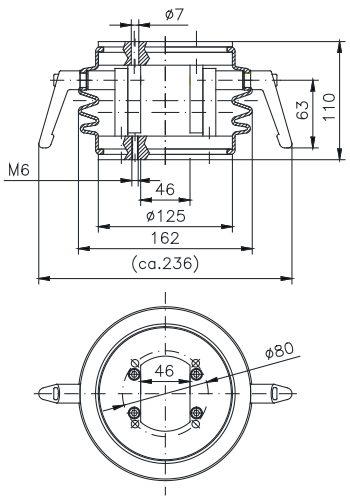

Components

Profile



Order No.	Execution
s. page 100	Extruded aluminium sheath, open version with integrated cable channel with black rubber cover

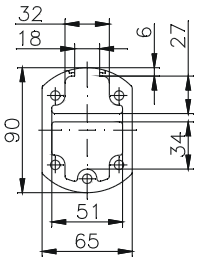

Profile open

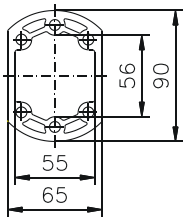

Profile closed

Height adjustment unit GTN II / GT 48/2

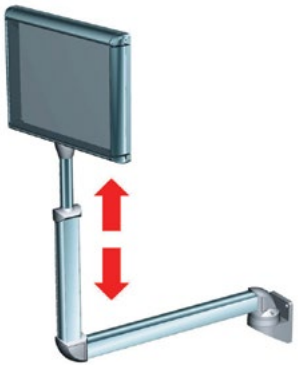

Order No.	Execution
49.47 30 01	Height adjustment „tube in tube“ consisting of: combination GTN II / GT 48/2 tube incl. coupling GT 48/2 height adjustment area: 250 mm length of tube GTN II: 515 mm; total length 645 - 895 mm from lower edge GTN II-tube max. loading: 25 kg free cable entry: 40 mm other length GTN II-tube on request

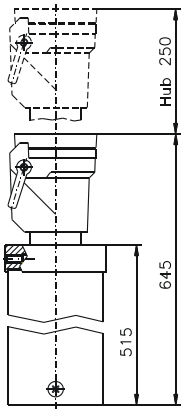

GTN II

Components

Height adjustment, slide hanging



Order No.	Execution
49,47 30 02	Consisting of tube GTN II open, slide and swivel joint, slide fixing on rear side of the commander system, adjustment by knob height adjustment area: 200 mm (damped by gas spring) total length of tube: 730 mm max. loading: 30 kg swivel range: 330°

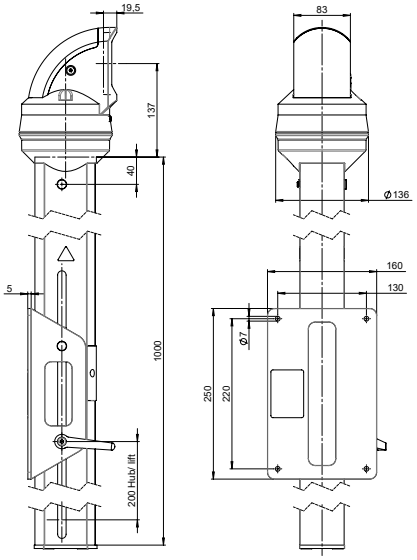

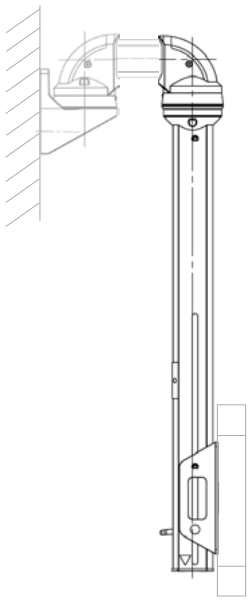

Height adjustment, slide standing



Order No.	Execution
49,47 30 03	Consisting of tube GTN II open, slide and swivel joint, slide fixing on rear side of the commander system, adjustment by knob height adjustment area: 200 mm (damped by gas spring) total length of tube: 730 mm max. loading: 30 kg swivel range: 330°

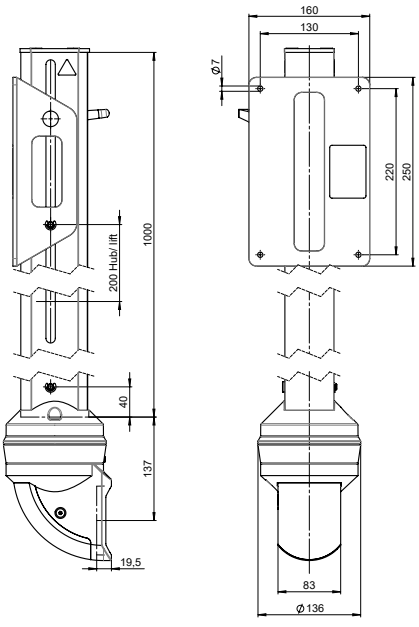

Components

Base connection element for suspension systems, command units and cabinets



Order No.	Execution
49.00 01 01	Signal light adaptation with thread M20x1.5 mm
49.00 01 02	Signal light adaptation with thread M22x1.5 mm

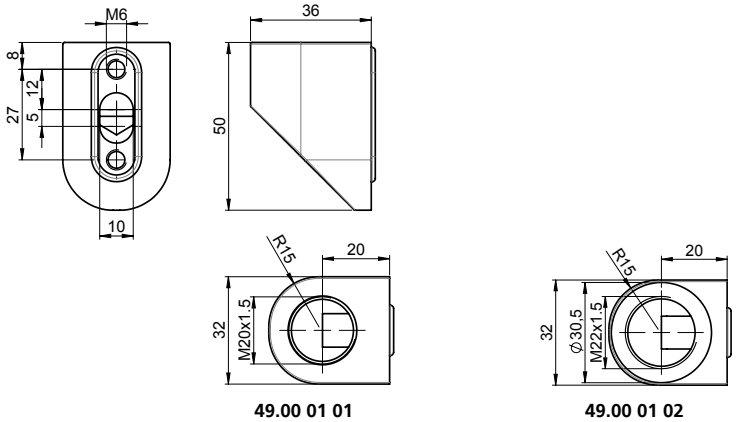

49.00 01 01 **49.00 01 02**

Base connection element for suspension systems, command units and cabinets



Order No.	Execution
49.00 01 03	Signal light adaption with tube Ø 25 mm, length = 250 mm
49.00 01 04	Signal light adaption with tube Ø 25 mm, length = 150 mm

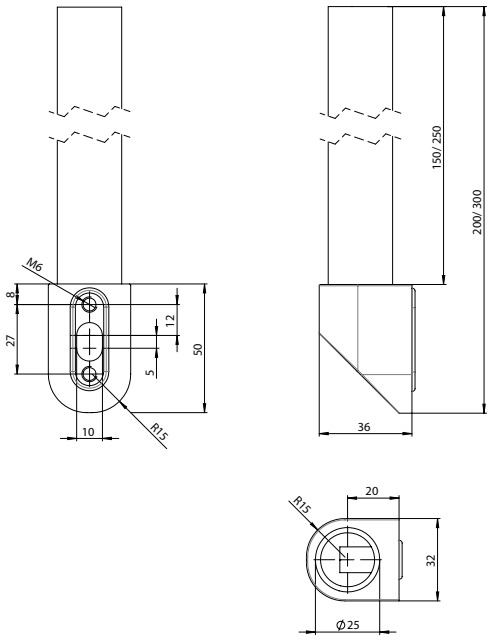

GTL

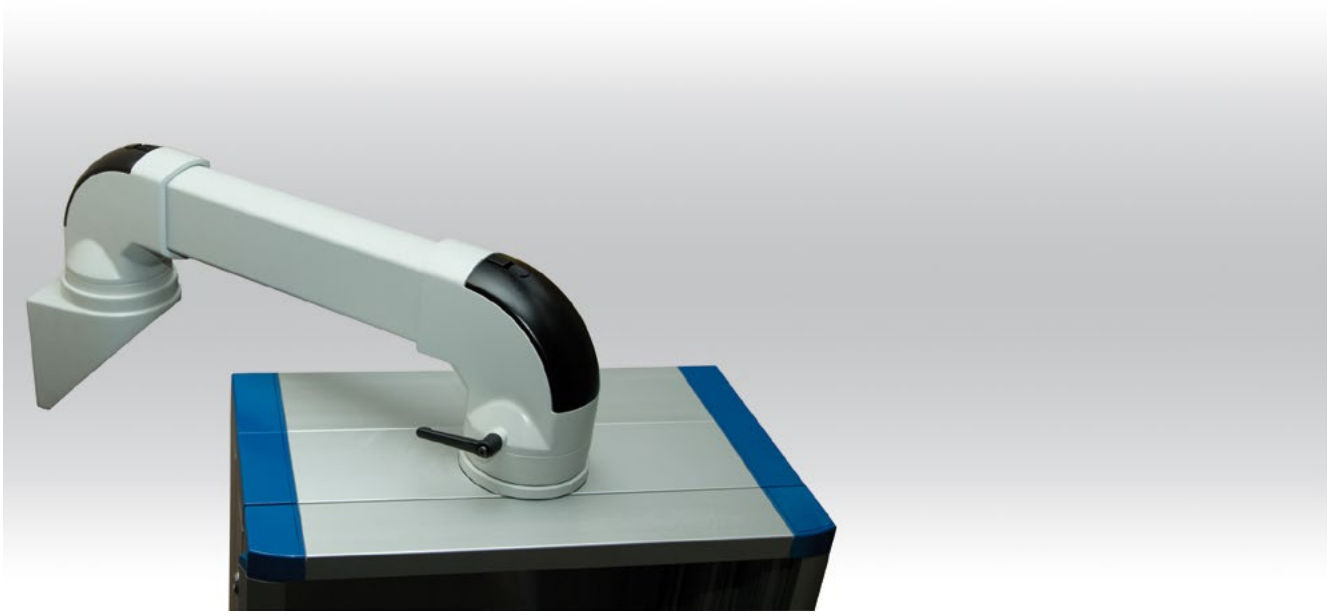

+ Aluminium profile suspension system for heavy loads
+ Complete product family GTS – GTN II – GTL product family
+ Can be combined with GTN II suspension system / height adjustment system GTV and control enclosures
+ Optional adjustment for horizontal alignment of the profile
+ Maximum static load 125 kg

Included in delivery

System components with fixing material and seals

Technical data

Material	Connecting tube: DIN EN 573, EN AW –ALMgSi Components: DIN EN 1706, EN AC-AlSi 12 (Fe)
Painting	Powder coating
Colour	Tube and components in RAL 7035, light grey
Ingress protection	IP 54 to EN 60529
Free cable passage	Tube and components Ø 70 mm

Product range

Type	Order No.	Weight (g)
Top-mounted joint	**49.62 66 00**	8180
Wall hinge	**49.62 70 00**	10000
Angle	**49.62 71 00**	3120
Angle GTL / GTN II	**49.62 71 47**	4070
Foot stand	**49.62 72 00**	2770
Coupling	**49.62 73 00**	4760
Angle coupling	**49.62 75 00**	6040
Intermediate joint	**49.62 67 00**	9450

Type	Order No.	Weight (g)
Aluminium profile closed RAL 7035		
Standard length 0,5 m	**49.62 20 01**	4510
Standard length 1 m	**49.62 20 02**	9040
Standard length 2 m	**49.62 20 03**	18000
Standard length 3 m	**49.62 20 04**	27000
Variable length (please specify)	**49.62 20 99**	
Aluminium profile closed anodized		
Standard length 0,5 m	**49.62 21 01**	4510
Standard length 1 m	**49.62 21 02**	9030
Standard length 2 m	**49.62 21 03**	18000
Standard length 3 m	**49.62 21 04**	27000
Variable length (please specify)	**49.62 21 99**	
Aluminium profile closed RAL 7035 for coupling GTL*		
Standard length 0,5 m	**49.62 20 11**	4500
Standard length 1 m	**49.62 20 12**	9030
Variable length (please specify)	**49.62 20 98**	
Aluminium profile closed anodized for coupling GTL*		
Standard length 0,5 m	**49.62 21 11**	4500
Standard length 1 m	**49.62 21 12**	9000
Variable length (please specify)	**49.62 21 98**	

* Note: In case of hanging version these types are to be selected in connection with the coupling.

Load diagram

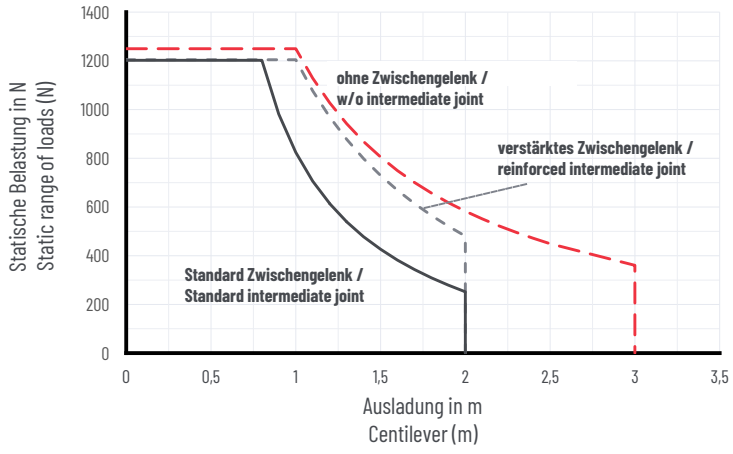

Note: the vertical length of the profile is responsible for the load of the complete suspension system (lever arm!). Further information for this on request. The values in the above load diagram are gulty to an execution hanging or standing. The declarations of weight are a summary from installation weight, Commander and all components and tubes between Commander and angle.

GTL

Components

Top-mounted joint



Order No.	Execution
49.62 66 00	Diecast aluminium with cover cap plastic Swivelling range 310°. Lockable with clamping lever.

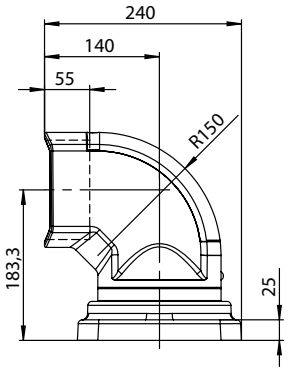

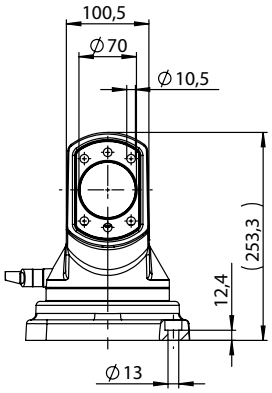

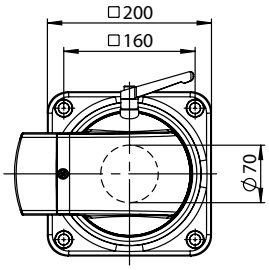

Wall hinge



Order No.	Execution
49.62 70 00	Diecast aluminium with cover cap plastic Swivelling range 310°. Lockable with clamping lever.

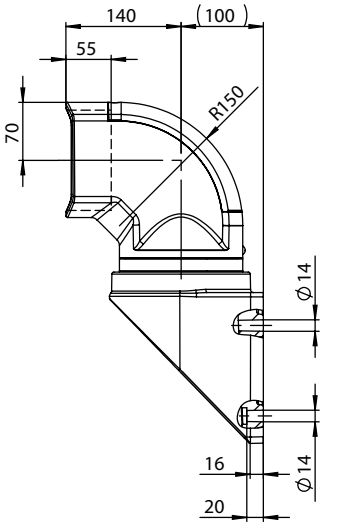

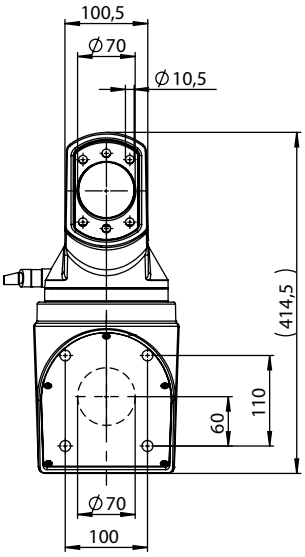

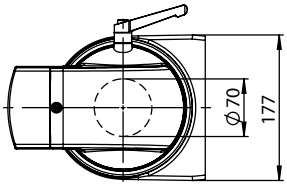

Components

Angle



Order No.	Execution
49.62 71 00	Diecast aluminium with cover cap plastic 90° angle

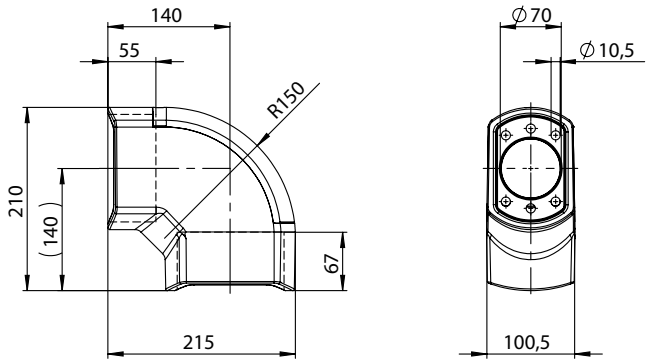

Angle GTL / GTN II



Order No.	Execution
49.62 71 47	for combination GTL and GTN II

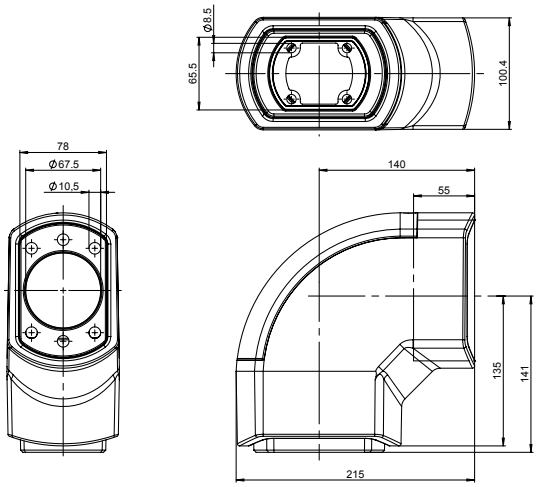

Foot stand



Order No.	Execution
49.62 72 00	Diecast aluminium, fixed version, for floor mounting or wall mounting with rigid outlet incl. 4 Einstellschrauben zur horizontalen Ausrichtung

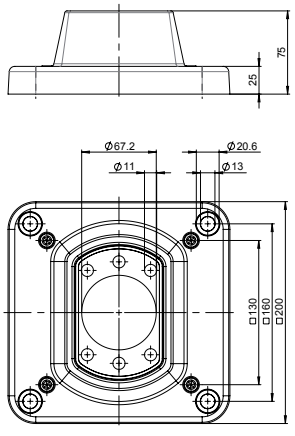

GTL

Components

Coupling



Order No.	Execution
49.62 73 00	Diecast aluminium, Swivelling range 310°. Lockable with clamping lever. Fastening the profile from the outside.

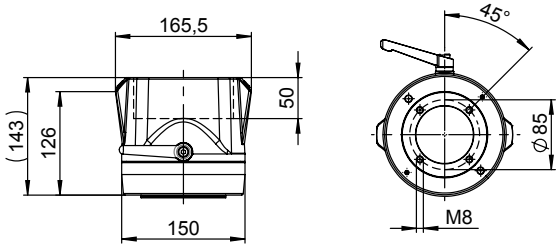

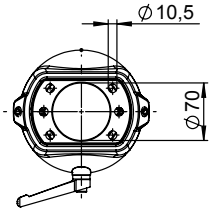

Profile



Order No.	Execution
s. page 114	Extruded aluminium profile

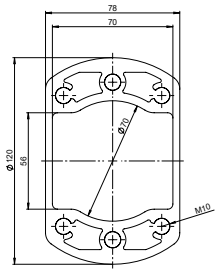

Angle coupling



Order No.	Execution
49.62 75 00	Diecast aluminium with cover cap plastic 90° angle with swivelling range 310°. Lockable with clamping lever.

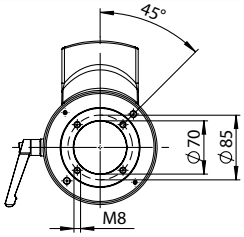

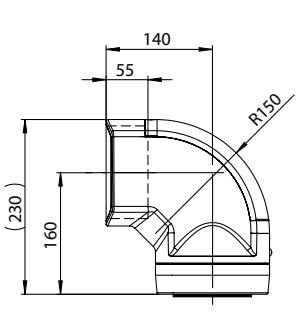

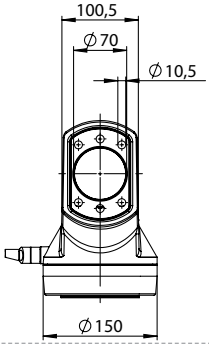

Components

Intermediate joint



Order No.	Execution
49.62 67 00	Diecast aluminium with cover cap plastic Swivelling range 310. Lockable with clamping lever.

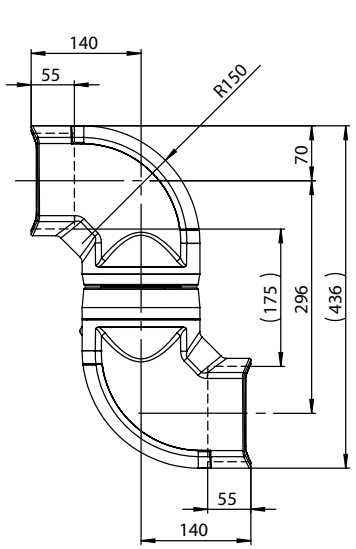

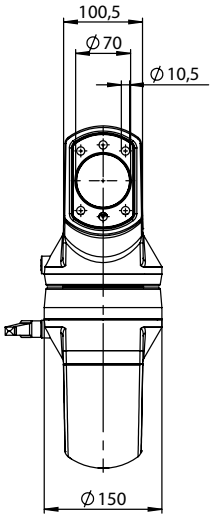

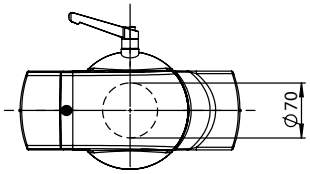

Intermediate joint reinforced



Order No.	Execution
49.62 67 01	Diecast aluminium with cover cap plastic Swivelling range 310° . Lockable with clamping lever.

Note: This intermediate joint must be used with the GTV 2.0 assembly.

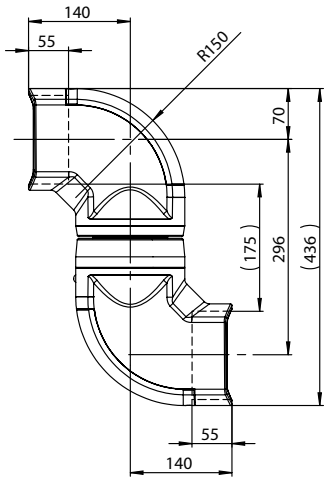

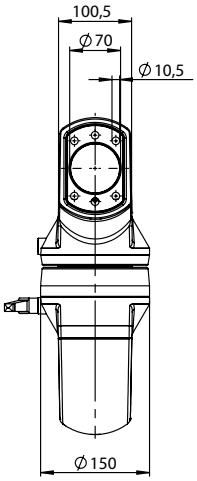

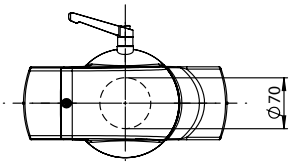

Flat Panel Adapter



+ Connection for Panel PCs and flat control enclosures
+ Slim design
+ Protection class IP 54 with GTS/ IP 65 with GTH easy coupling
+ Comfortable access and generous assembly opening
+ Optional with angle adjustment +/- 20°

Included in delivery

Connection compartment with lid and double ward 3mm lock. GTS or GTH easy coupling inclusive.

Optional with angle adjustment.

Technical data

Material	Connection compartment: stainless steel 304 Angle adjustment: stainless steel 304 Lid: abs
Surface	Connection compartment: RAL 7035 Angle adjustment: RAL 7035 Lid: RAL 7021
Seal	CR and/or NBR
Ingress protection	With GTS coupling: IP 54 With GTH easy coupling: IP 65
Free cable passage	GTS: 53 x 19 mm GTH easy: ø 41 mm

Product range

Order No.	Dimensions (mm) W x H x D	Variation	Cutout	Weight (kg)
50.10 20 10	193 x 199 x 104	Flat Panel Adapter GTS	VESA 75	1.89
50.10 20 20	193 x 199 x 104	Flat Panel Adapter GTS	VESA 100	1.81
50.10 20 99	193 x 199 x 104	Flat Panel Adapter GTS	special	o.req.
50.10 30 10	193 x 204 x 104	Flat Panel Adapter GTH 48 easy	VESA 75	2.39
50.10 30 20	193 x 204 x 104	Flat Panel Adapter GTH 48 easy	VESA 100	2.31
50.10 30 99	193 x 204 x 104	Flat Panel Adapter GTH 48 easy	special	o.req.
50.20 20 10	193 x 251 x 104	Flat Panel Adapter GTS with angle adjustment	VESA 75	5.26
50.20 20 20	193 x 251 x 104	Flat Panel Adapter GTS with angle adjustment	VESA 100	5.18
50.20 20 99	193 x 251 x 104	Flat Panel Adapter GTS with angle adjustment	special	o.req.
50.20 30 10	193 x 258 x 104	Flat Panel Adapter GTH 48 easy with angle adjustment	VESA 75	5.76
50.20 30 20	193 x 258 x 104	Flat Panel Adapter GTH 48 easy with angle adjustment	VESA 100	5.68
50.20 30 99	193 x 258 x 104	Flat Panel Adapter GTH 48 easy with angle adjustment	special	o.req.
50.30 40 10	193 x 214 x 149	Flat Panel Adapter GTN II	VESA 75	4.11
50.30 40 20	193 x 214 x 149	Flat Panel Adapter GTN II	VESA 100	4.03
50.30 40 99	193 x 214 x 149	Flat Panel Adapter GTN II	special	o.req.







Technical Details

Flat Panel Adapter GTS

Order No.	Cutout
50.10 20 10	VESA 75
50.10 20 20	VESA 100
50.10 20 99	Special

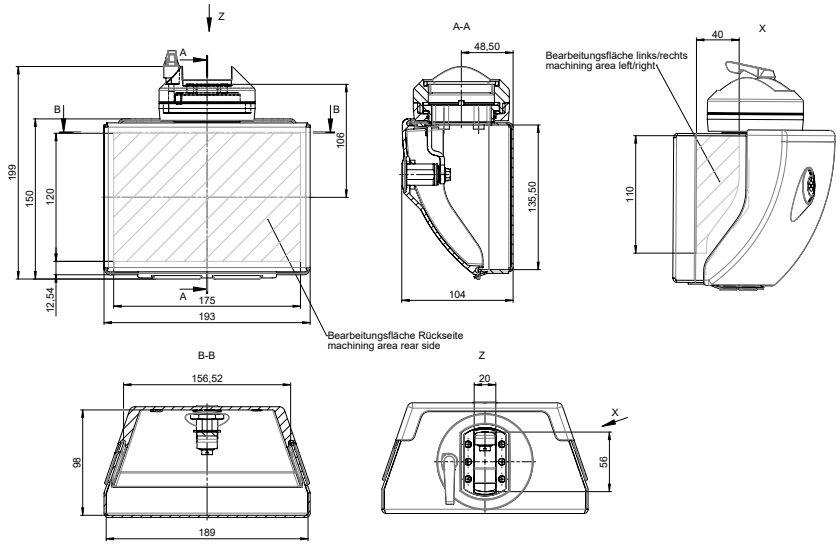

Cutout

50.10 20 10 VESA 75

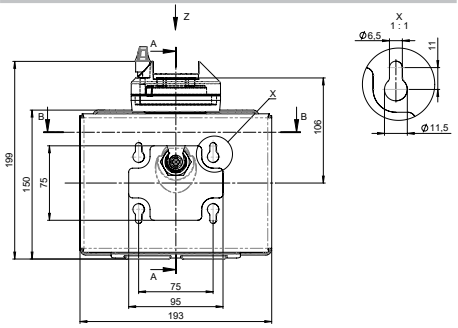

Cutout

50.10 20 20 VESA 100

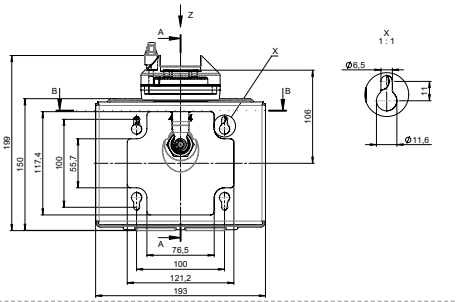

Flat Panel Adapter

Flat Panel Adapter GTH 48 easy

Order No.	Cutout
50.10 30 10	VESA 75
50.10 30 20	VESA 100
50.10 30 99	Special

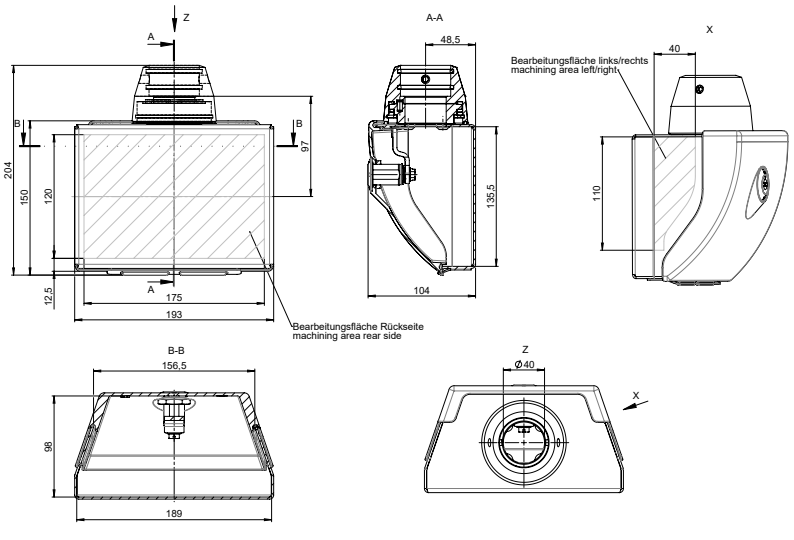

Cutout

50.10 30 10 VESA 75

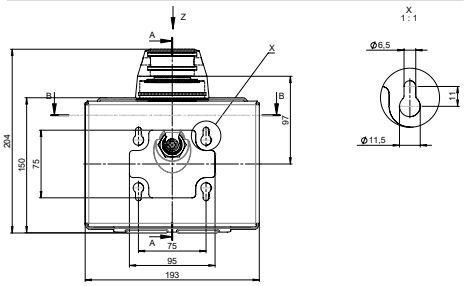

Cutout

50.10 30 20 VESA 100

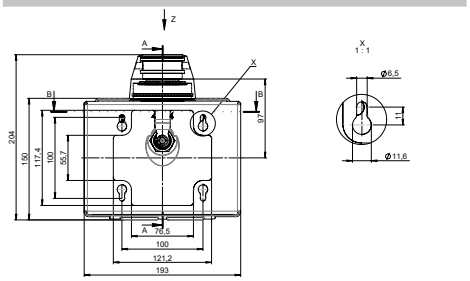

Flat Panel Adapter GTS with angle adjustment

Order No.	Cutout
50.20 20 10	VESA 75
50.20 20 20	VESA 100
50.20 20 99	Special

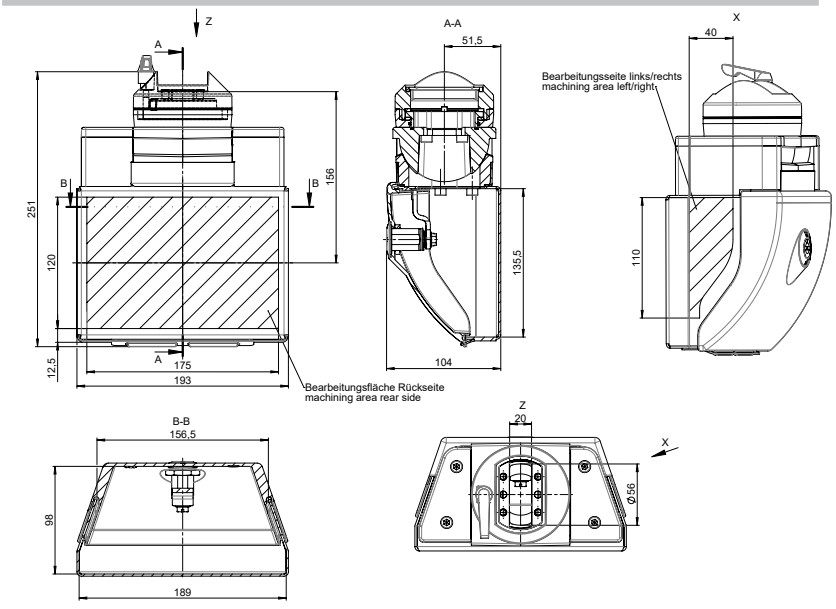

Cutout

50.20 20 10 VESA 75

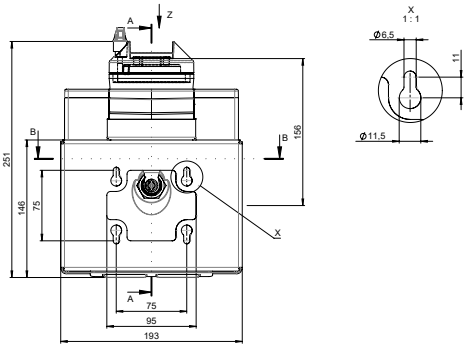

Cutout

50.20 20 20 VESA 100

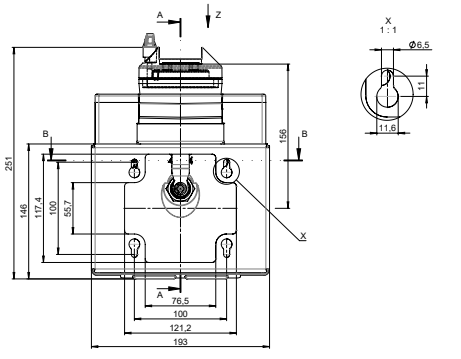

Flat Panel Adapter

Flat Panel Adapter GTH 48 easy with angle adjustment

Order No.	Cutout
50.20 30 10	VESA 75
50.20 30 20	VESA 100
50.20 30 99	Special

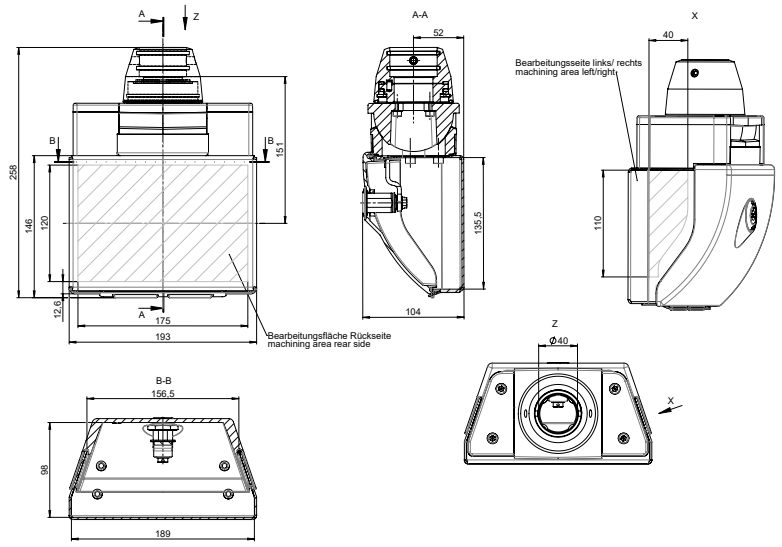

Cutout

50.10 30 10 VESA 75

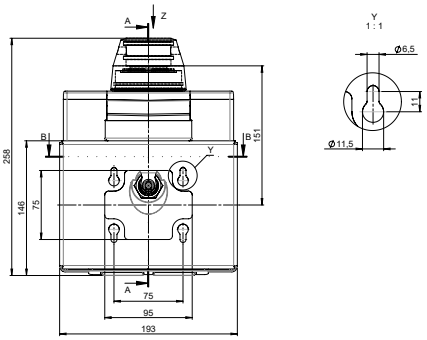

Cutout

50.10 30 20 VESA 100

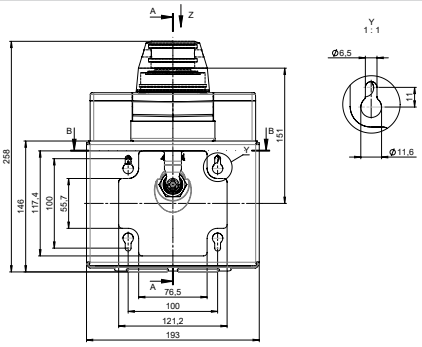

Flat Panel Adapter GTN II

Order No.	Cutout
50.30 40 10	VESA 75
50.30 40 20	VESA 100
50.30 40 99	Special

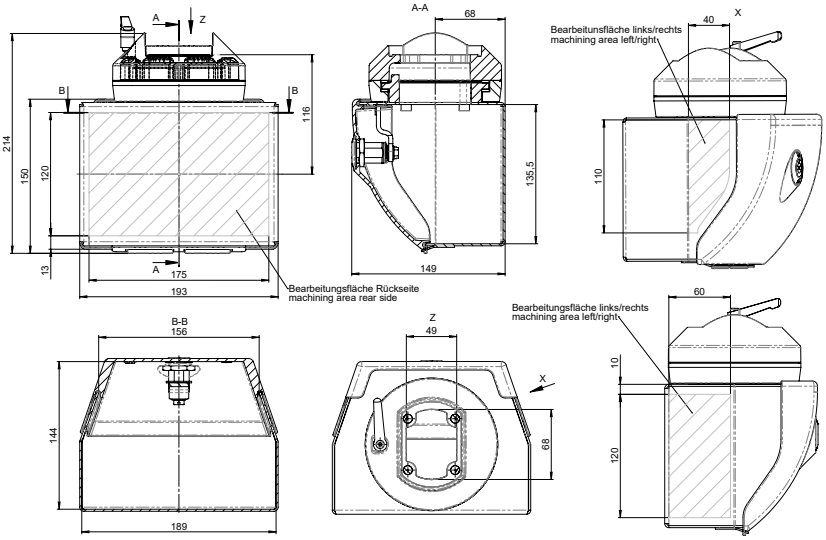

Cutout

50.20 20 10 VESA 75

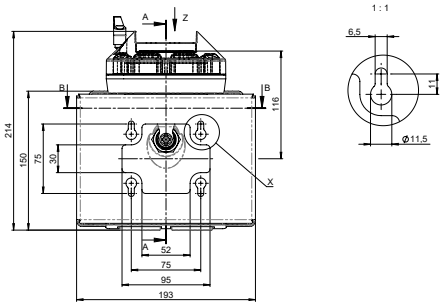

Cutout

50.20 20 20 VESA 100

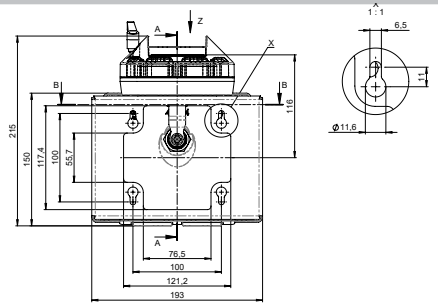

GTV light



+ Load range 5 - 34 kg
+ 3 strokes: 400 mm / 600 mm / 800 mm
+ Step less adjustment
+ Adjustable end stops and load ranges
+ Position lockable by clamping lever
+ Possible subsequent integration into existing GTN II system
+ Spacious and easily accessible cable channel
+ Safe cable routing away from mechanical components
+ For ergonomic workplace design
+ Machine side combinable with GTN II

Included in delivery

Height adjustment incl. fixing material (assembly components for a connection to the machine and to the control enclosure are not included).



Technical data

Load range	5 – 34 kg
Ingress protection	IP 54
Stroke	400 / 600 / 800 mm
Usable adjustment range	314 / 519 / 691 mm
Weight	3,5 kg (version with 400 mm)
Temperature range	up to appr. 45°C
Life time	25.000 double strokes

Product range

Stroke = 400 mm	Order No.
Load range 1 (5 - 10 kg)	**49.84 20 01**
Load range 2 (10 - 16 kg)	**49.84 20 02**
Load range 3 (16 - 25 kg)	**49.84 20 04**
Load range 4 (25 - 35 kg)	**49.84 20 05**
Stroke = 600 mm	
Load range 1 (5 - 10 kg)	**49.84 40 01**
Load range 2 (10 - 16 kg)	**49.84 40 02**
Load range 3 (16 - 25 kg)	**49.84 40 04**
Load range 4 (25 - 35 kg)	**49.84 40 05**
Stroke = 800 mm	
Load range 1 (5 - 7 kg)	**49.84 60 01**
Load range 2 (7 - 13 kg)	**49.84 60 02**
Load range 3 (13 - 21 kg)	**49.84 60 04**

Accessories

Adapter GTS	**49.84 10 01**
Adapter GT 48/2	**49.84 10 02**
Adapter GTK electronic	**49.84 10 03**

Note: encapsulated Panel PCs from Beckhoff and B & R (also adapter required) can be attached to 48 tube via the GT 48/2 adapter.

The adapters allow the attachments to be connected with other profile cross-section.

Adapter GT 48/2

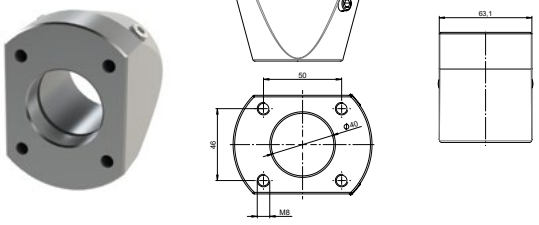

Adapter GTS

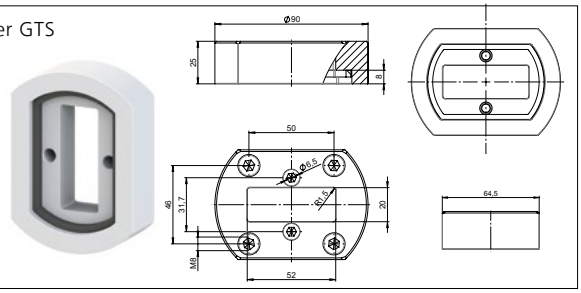

Adapter GTK electronic

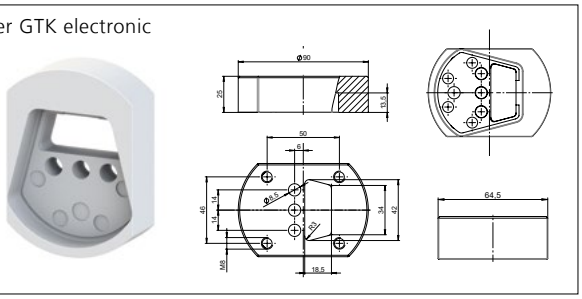

The load range is calculated by:
- weight of the command unit / command housing with installations
- possibly used coupling / inclination adapter, etc.
- vertical profile up to the head of the GTV light

The load range is calculated for ambient temperature 20 °C. When using under strongly deviating temperature please contact us!

The GTV light can be precisely adjusted to the attached load in the desired load range by means of a concealed adjusting screw

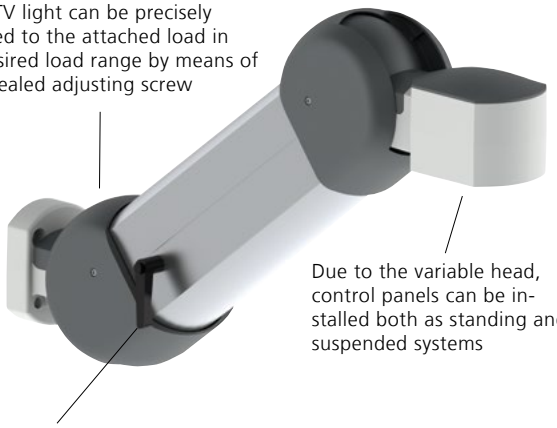

Due to the variable head, control panels can be installed both as standing and suspended systems

Brake is used for additional locking in the desired position



Maximum allowable lever not longer than 250 mm.
Other lengths on request after technical clarification



GTV light

Technical details

Height adjustable suspension system, outlet hanging or upright



Note: The stroke of the GTV light can be steplessly limited both upwards and downwards in order to avoid collisions with possibly existing interference contours.

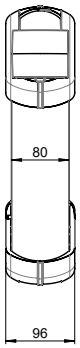

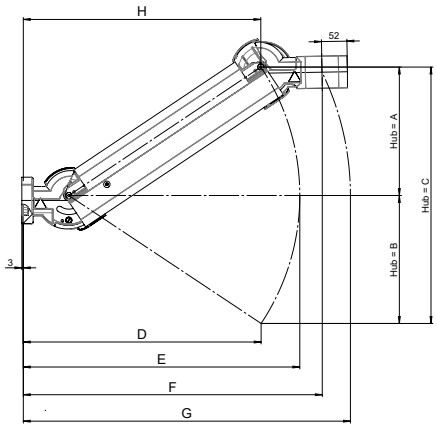

Minimum length between the joints (attachment joint, wall joint, intermediate joint) and GTV light = 85 mm

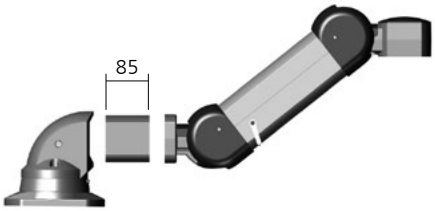

Art.-Nr./ Art.No.:	Lastbereich / Load range	Hub A	Hub B	Hub C	D	E	F	G	H
498420010	5 - 10 kg	174	140	314	370	403	473	527	350
498420020	10 - 16 kg								
498420040	16 - 25 kg								
498420050	25 - 34 kg								
498440010	5 - 10 kg	260	259	519	481	559	604	683	480
498440020	10 - 16 kg								
498440040	16 - 25 kg								
498440050	25 - 34 kg								
498460010	5 - 7 kg	346	345	691	610	714	733	838	609
498460020	7 - 13 kg								
498460040	13 - 21 kg								

Possible combinations

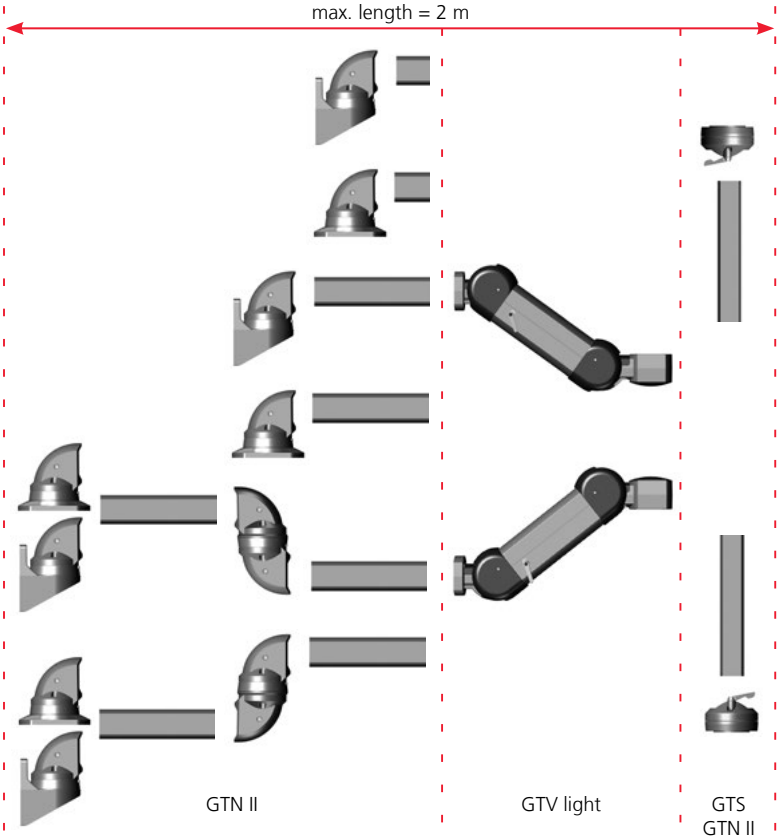

GTV 2.0



+ Load range from 20 to 60 kg
+ For making the workplace ergonomic
+ Can be combined on the machine side with the GTL suspension system
+ Can be combined on the operator side with GTN II / GT 48/2 / GTS
+ Freely positionable version
+ Adjustable binding
+ High torsional stiffness
+ Continiuous potential equalisation
+ Stroke limitation every 5°

Included in delivery

Height adjustment incl. fixing material (assembly components for a connection to the machine and to the control enclosure are not included).

Technical data

Material	Connecting plates: S235 Components: EN 1706 AC-46000DF Cable channel cover sheet: EN 573-3 AW-5754 H22
Painting	Powder coating
Colour	Connecting plates: RAL 7016 Components: RAL 7035 Cable channel cover sheet: RAL 7035
Load range	20 - 60 kg
Life time	25.000 double strokes
Temperature range	up to appr. 45 °C

GTV 2.0

Product range

	Order No.	Weight (g)
Load range 1 / Outlet hanging	**49.85 50 01**	17000
Load range 2 / Outlet hanging	**49.85 50 02**	17000
Load range 3 / Outlet hanging	**49.85 50 03**	17000
Load range 1 / Outlet upright	**49.85 51 01**	17000
Load range 2 / Outlet upright	**49.85 51 02**	17000
Load range 3 / Outlet upright	**49.85 51 03**	17000

Load range	
Load range 1:	20 – 32 kg
Load range 2:	32 – 44 kg
Load range 3:	44 – 60 kg



GTV 2.0 outlet towards suspension system GTN II for connecting command system



Suspension system GTL outlet towards machinery



Outlet hanging



Outlet upright

Load diagram

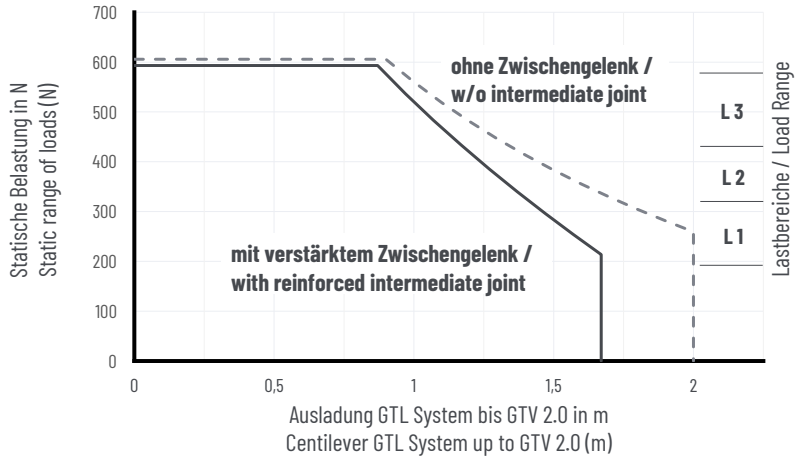

Load range GTV 2.0	max. profile length GTL without Intermediate joint	max. profile length GTL with reinforced Intermediate joint	max. length to lower edge of control enclosure
	L1	L1 + L2	L3
1	1400 mm	2 x 400 mm	1250 mm
2	800 mm	nur auf Anfrage! only on request!	1250 mm
3	600 mm	nur auf Anfrage! only on request!	1250 mm

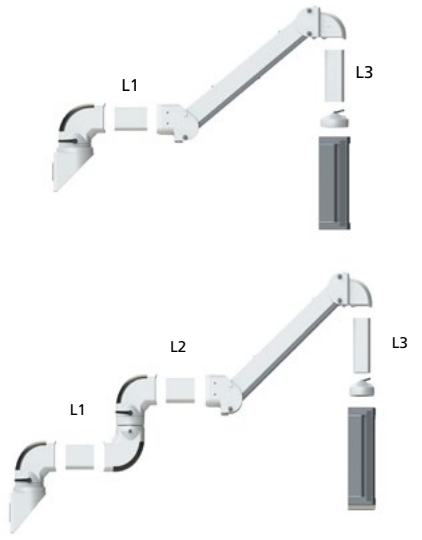

Max. length connection GTV 2.0 to lower edge of control enclosure 1250 mm.
Further lengths only on request and technical clarification

Possible combinations

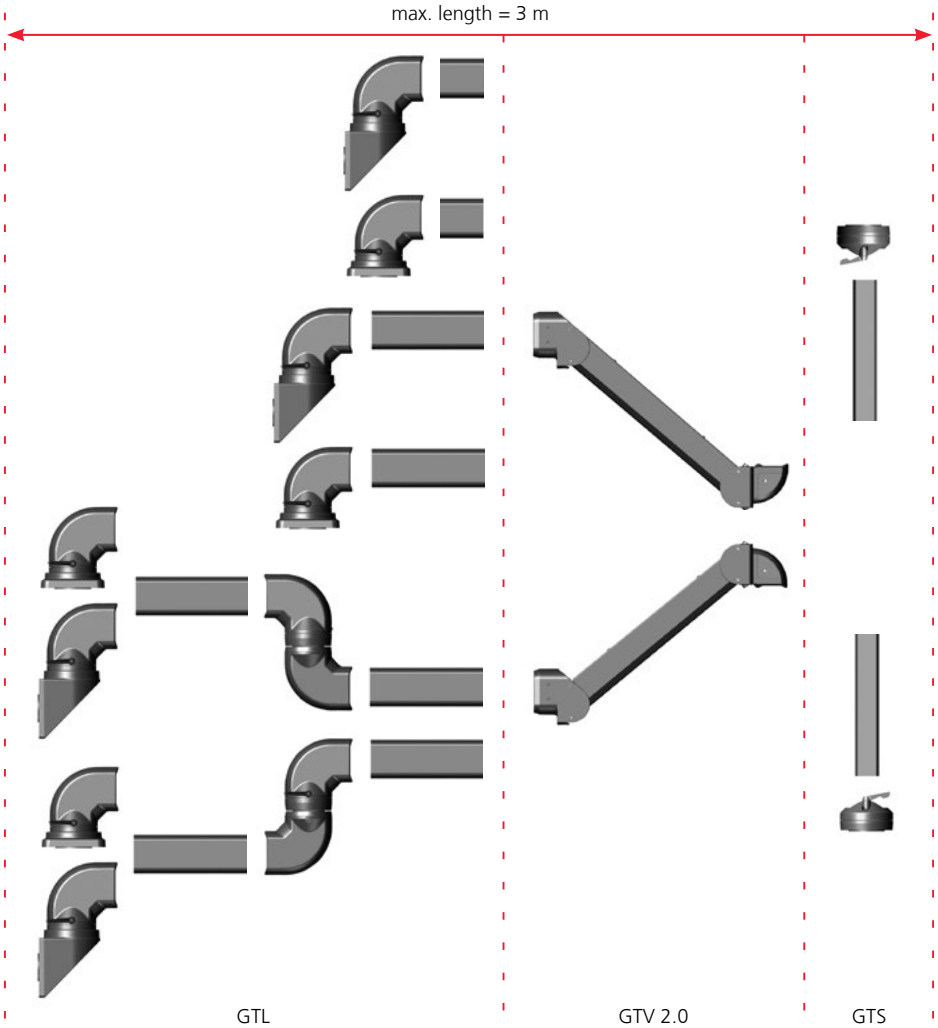

Minimum length between the joints (attachment joint, wall joint, intermediate joint) and GTV 2.0 = 150 mm

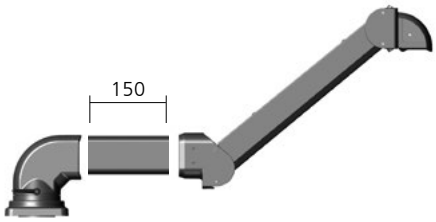

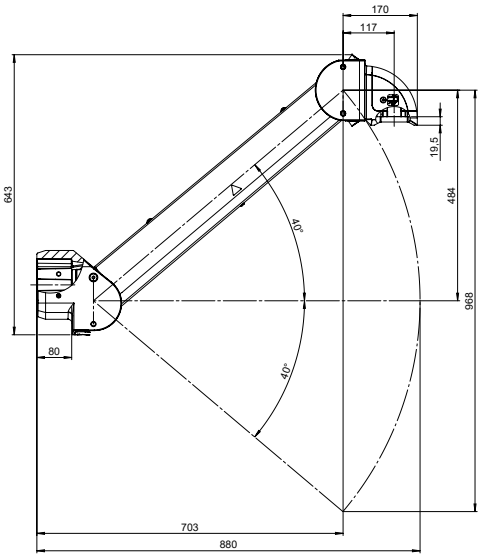

GTV 2.0

Technical details

Height adjustment system, outlet hanging



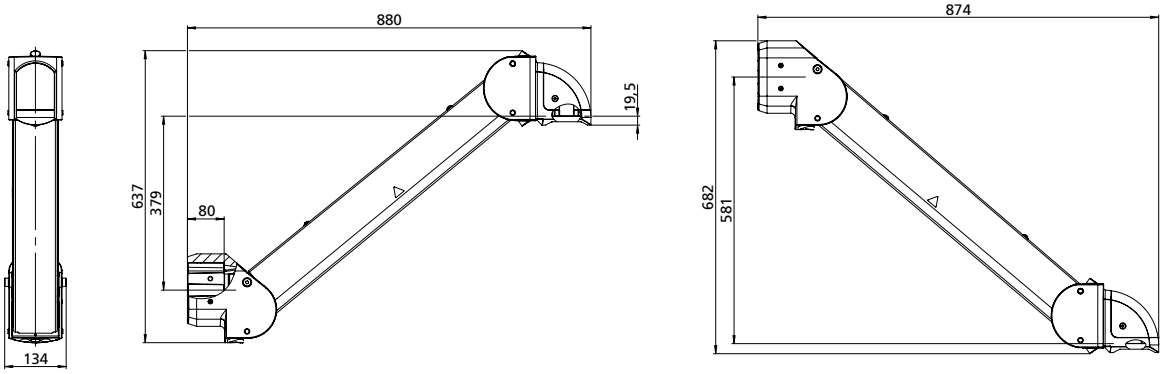

Height adjustment system, outlet upright



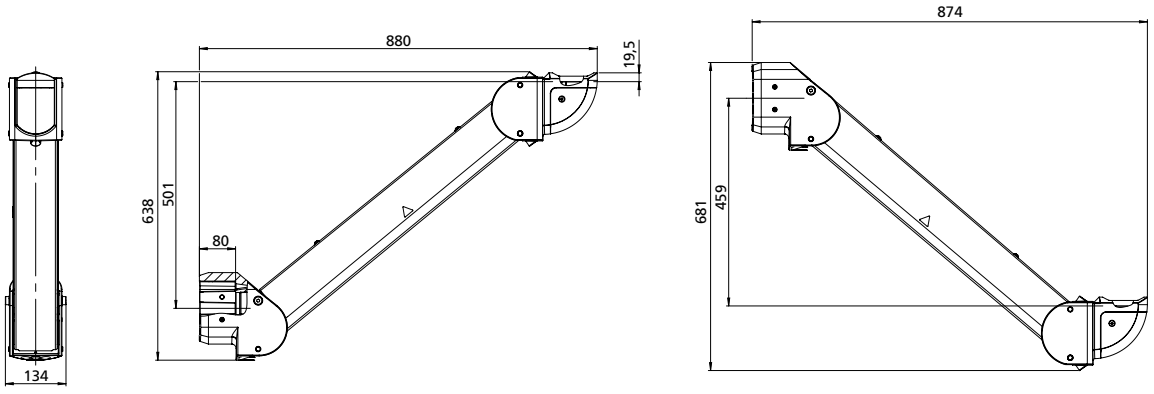

GTH 48 / GTH 60



+ Stainless steel round tube system with system components
+ Tube diameter 48 and 60 mm
+ Tube Execution S-, J- and I-shape
+ Components screwed to tube
+ EMC Execution optional
+ Easy to combine with GTH easy

Included in delivery

System components and tube mounted if ordered

Technical data

Material	Tube: stainless steel 1.4301 System components: stainless steel 1.4305
Ingress protection	IP 65 to EN 60529
Surface	Tube: grinded, grain 240
Free cable passage	GTH 48: 41 mm GTH 60: 53 mm
Temperature range	-25 °C to +60 °C

GTH 48 / GTH 60

Product range

	GTH 48		GTH 60	
	Order No.	Weight (g)	Order No.	Weight (g)
Coupling	**57.01 73 00**	2790	**57.02 73 00**	3390
Coupling EMC	**57.01 73 01**	2790	**57.02 73 01**	3390
Coupling for external tube fitting	**57.01 73 02**	3070	**57.02 73 02**	3680
Top-mounted joint	**57.01 66 00**	2650	**57.02 66 00**	3290
Top-mounted joint EMC	**57.01 66 01**	2630	**57.02 66 01**	3290
Top-mounted joint for external tube fitting	**57.01 66 02**	2940	**57.02 66 02**	3590
Foot stand (hanging / standing)	**57.01 74 00**	2370	**57.02 74 00**	2710
Foot stand with cable outlet (hanging / standing)	**57.01 72 00**	3120	**57.02 72 00**	3780
Console adapter	**57.01 76 00**	1290	**57.02 76 00**	1370
Console adapter hygiene	**57.01 76 01**	1290	**57.02 76 01**	1370
Wall console	**57.01 79 00**	2910	**57.02 79 00**	3120
Spare blind flange	**57.01 99 00**		**57.02 99 00**	
Tube I (500 mm)	**57.01 00 05**	1760	**57.02 00 05**	2490
Tube I (1000 mm)	**57.01 00 10**	3530	**57.02 00 10**	5000
Tube I (1500 mm)	**57.01 00 15**	5300	**57.02 00 15**	7500
Tube I special length	**57.01 00 99**		**57.02 00 99**	
Tube S (500 mm)	**57.01 02 05**	3520	**57.02 02 05**	4340
Tube S (1000 mm)	**57.01 02 10**	5300	**57.02 02 10**	6580
Tube S Sonderlänge	**57.01 02 99**		**57.02 02 99**	
Tube J (500 mm)	**57.01 01 05**	3510	**57.02 01 05**	4330
Tube J (750 mm)	**57.01 01 07**	5970	**57.02 01 07**	7450
Tube J (1000 mm)	**57.01 01 10**	6850	**57.02 01 10**	8570
Tube J special length	**57.01 01 99**		**57.02 01 99**	
System mounting	**57.00 99 00**		**57.00 99 00**	

Load diagram

Suspension system GTH

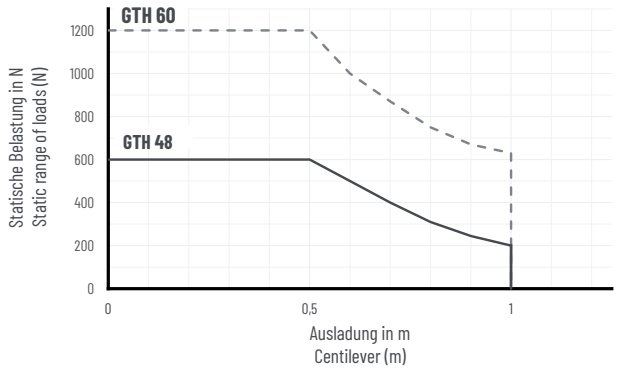

Components

Coupling



Pivot, can be locked at any point using clamping screw.
Swivel range: up to 350°, can be adjusted in 60° steps.

Order No.	Execution	for tube	A	B	C	D	E	F	G
GTH 48									
57.01 73 00	Standard	Ø 48	Ø 118	70	53	68	72	Ø 44	13
57.01 73 01	EMC	Ø 48	Ø 118	70	53	68	72	Ø 44	13
57.01 73 02	for external fitting	Ø 48	Ø 118	82	65	68	72	Ø 44	13
GTH 60									
57.02 73 00	Standard	Ø 60	Ø 130	81	64	85,8	68	Ø 53	13
57.02 73 01	EMC	Ø 60	Ø 130	81	64	85,8	68	Ø 53	13
57.02 73 02	for external fitting	Ø 60	Ø 130	92	75	85,8	68	Ø 53	13

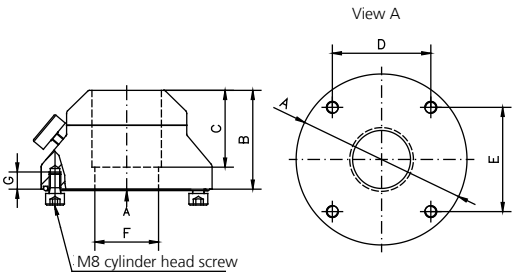

Top-mounted joint



Pivot, can be locked at any point using clamping screw.
Swivel range: up to 350°, can be adjusted in 60° steps.

Order No.	Execution	for tube	A	B	C	D	E	F	G
GTH 48									
57.01 66 00	Standard	Ø 48	Ø 118	70	53	68	72	Ø 44	13
57.01 66 01	EMC	Ø 48	Ø 118	70	53	68	72	Ø 44	13
57.01 66 02	for external fitting	Ø 48	Ø 118	82	65	68	72	Ø 44	13
GTH 60									
57.02 66 00	Standard	Ø 60	Ø 130	81	64	85,8	68	Ø 53	14
57.02 66 01	EMC	Ø 60	Ø 130	81	64	85,8	68	Ø 53	14
57.02 66 02	for external fitting	Ø 60	Ø 130	92	75	85,8	68	Ø 53	14

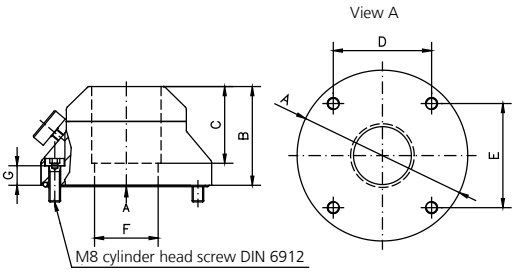

Foot stand for base or ceiling mounting



Order No.	Execution	for tube	A	B	C	D	E	F
GTH 48								
57.01 74 00	Foot stand (hanging / standing)	Ø 48	Ø 118	80	60	68	72	Ø 41,9
GTH 60								
57.02 74 00	Foot stand (hanging / standing)	Ø 60	Ø 130	85	60	85,8	68	Ø 53,9

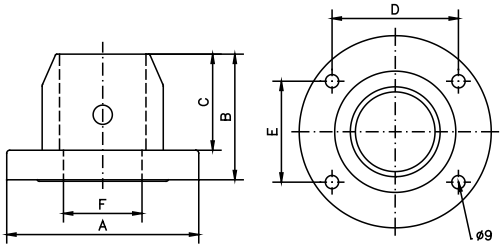

GTH 48 / GTH 60

Components

Foot stand with cable outlet



for external cable outlet on side

Order No.	Execution	für Tube	A	B	C	D	E	F	G	H
GTH 48										
57.01 72 00	Foot stand (hanging / standing)	Ø 48	Ø 118	110	60	68	72	Ø 41,9	45	38,5
GTH 60										
57.02 72 00	Foot stand (hanging / standing)	Ø 60	Ø 130	115	60	85,8	68	Ø 53,9	70	38,5

57029900

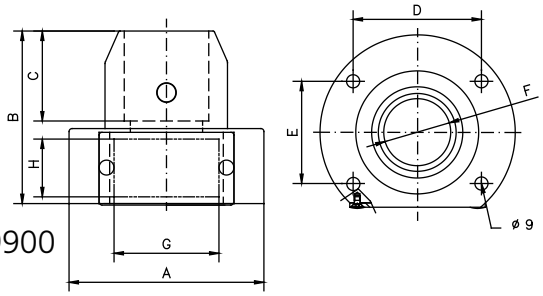

Spare blind flange for foot stand with cable outlet



Order No.	A	B	C	D	H	I
GTH 48						
57.01 99 02	73	47,5	2,5	55	45	38,5
GTH 60						
57.02 99 00	90	48	2,5	80	70	38,5

Max. number of cable glands/ blind flange:

57.01 99 02: 1 x 25 or 1 x 20 or 4 x M12

57.02 99 00: 1 x 25 or 2 x 20 or 6 x M12

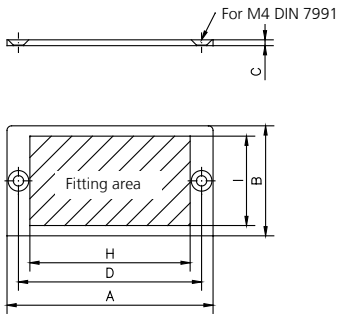

Console adapter



Order No.	for tube	A	B	C	D	E	F	G
GTH 48								
57.01 76 00	Ø 48,3	Ø 118	40	10,6	68	72	Ø 79	14°
GTH 60								
57.02 76 00	Ø 60,3	Ø 130	40	7,6	85,8	68	Ø 91	14°

Angle of inclination 14°

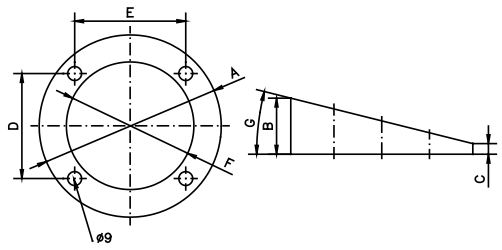

Components

Wall console



for adaption top-mounted joint or coupling

Order No.	für Tube	A	B	C	D	E	F	G	H	I
GTH 48										
57.01 79 00	Ø 48	138	178	155	132	88	84	50	72	68
GTH 60										
57.02 79 00	Ø 60	149	191,5	168	144	84	102	60	68	85,8

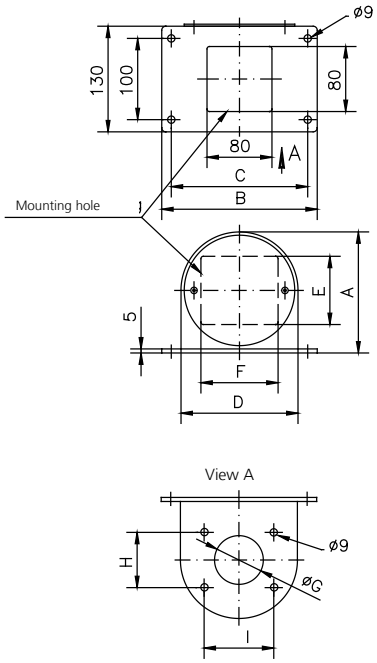

Connecting tube I



Order No.	L1 (mm)	A (outside Ø)	B (inside Ø)	Weight (g)
GTH 48				
57.01 00 05	500	48,3	41	1760
57.01 00 10	1000	48,3	41	3530
57.01 00 15	1500	48,3	41	5300
57.01 00 99	special length	48,3	41	-
GTH 60				
57.02 00 05	500	60,3	53	2490
57.02 00 10	1000	60,3	53	5000
57.02 00 15	1500	60,3	53	7500
57.02 00 99	special length	60,3	53	-

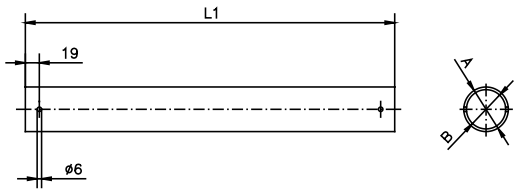

GTH 48 / GTH 60

Components

Connecting tube S



Order No.	L1 (mm)	L2 (mm)	L3 (mm)	A (outside Ø)	B (inside Ø)	Weight (g)
GTH 48						
57.01 02 05	500	300	300	48,3	41	3520
57.01 02 10	1000	300	300	48,3	41	5290
57.01 02 99	special length			48,3	41	-
GTH 60						
57.02 02 05	500	300	300	60,3	53	4340
57.02 02 10	1000	300	300	60,3	53	6580
57.02 02 99	special length			60,3	53	-

max. length L1 = 1000 mm

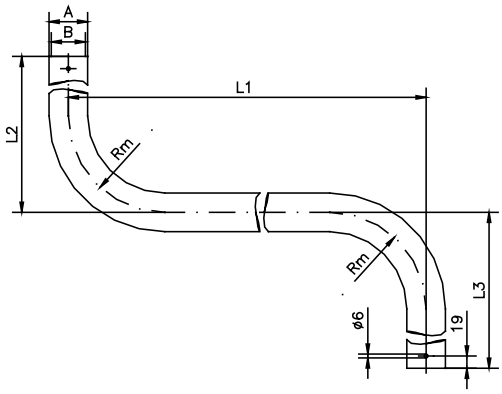

Connecting tube J



Order No.	L1 (mm)	L2 (mm)	L3 (mm)	A (outside Ø)	B (inside Ø)	Weight (g)
GTH 48						
57.01 01 05	500	300	300	48,3	41	3510
57.01 01 07	750	750	300	48,3	41	5970
57.01 01 10	1000	750	300	48,3	41	6850
57.01 01 99		special length		48,3	41	-
GTH 60						
57.02 01 05	500	300	300	60,3	53	4330
57.02 01 07	750	750	300	60,3	53	7450
57.02 01 10	1000	750	300	60,3	53	8570
57.02 01 99		special length		60,3	53	-

Product info:
Individual lengths and executions on request.

max. length L1 = 1000 mm

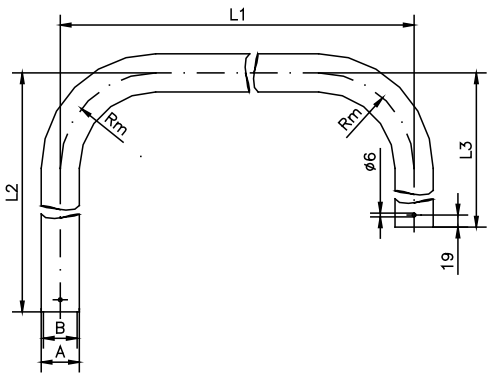

GTH 48 / GTH 60

Enquiry ☐ Order ☐

Please copy, complete and send to: hmi@rose-pw.de

Company _____ Telephone _____

Contact _____ Fax _____

Address _____ E-Mail _____

Suspension system ☐ GTH 48 ☐ GTH 60 Quantity _____

System consisting of the following components:

Components, side A

- ☐ Coupling
- ☐ EMC coupling
- ☐ Coupling for external tube fitting
- ☐ Top-mounted joint
- ☐ EMC top-mounted joint
- ☐ Top-mounted joint for external tube fitting
- ☐ Foot stand
- ☐ Foot stand for ceiling mounting
- ☐ Foot stand with cable outlet
- ☐ Foot stand (ceiling mounting) with cable outlet
- ☐ Console adapter
- ☐ Wall console

Connecting tube

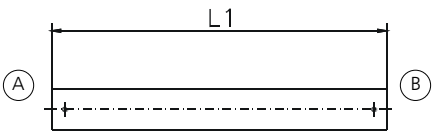

I-tube (L1)

- ☐ 500 mm
- ☐ 1000 mm
- ☐ 1500 mm
- ☐ Special length _____ mm

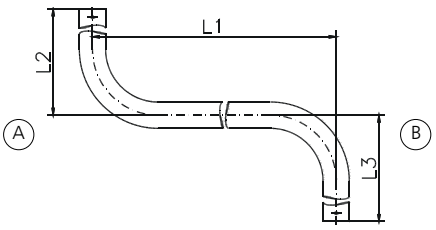

S-tube (L1/L2/L3)

- ☐ 500/300/300 mm
- ☐ 1000/300/300 mm
- ☐ Special length* _____ / _____ /_____ mm

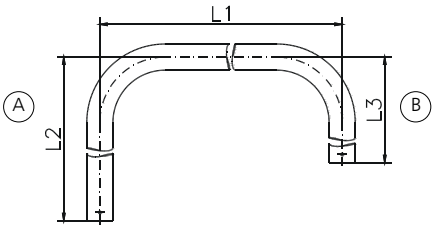

J-tube (L1/L2/L3)

- ☐ 500/300/300 mm
- ☐ 750/750/300 mm
- ☐ 1000/750/300 mm
- ☐ Special length* _____ / _____ /_____ mm

* Attention: measure dimension tube center
min. lengths L2 and L3: 280 mm
max. lengths L1 = 1000 mm

Components, side B

- ☐ Coupling
- ☐ EMC coupling
- ☐ Coupling for external tube fitting
- ☐ Top-mounted joint
- ☐ EMC top-mounted joint
- ☐ Top-mounted joint for external tube fitting
- ☐ Foot stand
- ☐ Foot stand for ceiling mounting
- ☐ Foot stand with cable outlet
- ☐ Foot stand (ceiling mounting) with cable outlet
- ☐ Console adapter
- ☐ Wall console

Accessories

- ☐ Spare blind flange untreated
- ☐ Spare blind flange treated _____

GTH 48 easy / GTH 60 easy

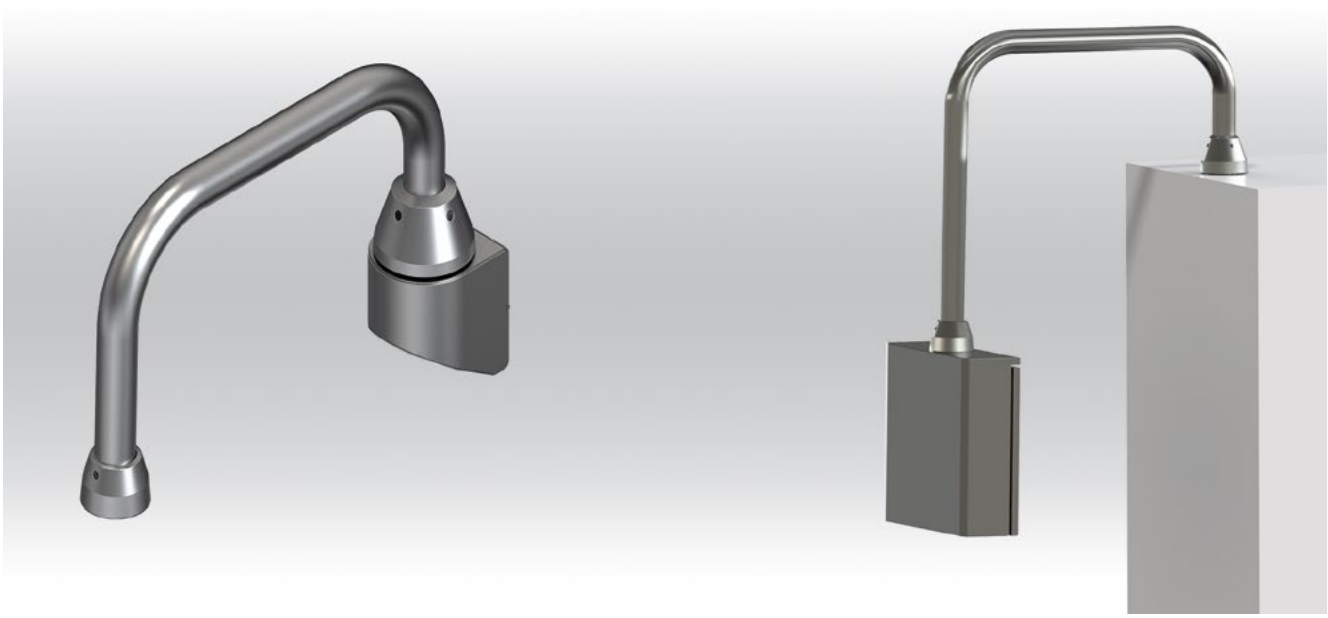

- + Stainless steel round tube system with system components
- + Tube diameter 48 and 60 mm
- + Tube Execution S-, J- and I-shape
- + Very compact design
- + Little assembly effort
- + Up to IP rating: IP 69
- + Easy to combine with GTH

Included in delivery

System components and tube mounted if ordered

Technical data

Material	Tube: stainless steel 1.4301/ 304 Components: stainless steel 1.4301/ 304
Ingress protection	IP 66 / IP 69 to EN 60529
Surface	Tube: grinded, grain 240
Free cable passage	GTH 48: 41 mm GTH 60: 53 mm
Temperature range	-25 °C to +60 °C

Product range

	GTH 48 easy		GTH 60 easy	
Type	Order No.	Weight (g)	Order No.	Weight (g)
Coupling	**57.03 73 00**	993	**57.04 73 00**	2710
Top-mounted joint	**57.03 66 00**	3200	**57.04 66 00**	3780
Console adapter	**57.03 76 00**	637	**57.04 76 00**	1190
Wall console	**57.03 79 00**	2230	**57.04 79 00**	2230
Tube I (500 mm)	**57.03 00 05**	1760	**57.04 00 05**	2490
Tube I (1000 mm)	**57.03 00 10**	3530	**57.04 00 10**	4990
Tube I (1500 mm)	**57.03 00 15**	5300	**57.04 00 15**	7500
Tube I special length	**57.03 00 99**		**57.04 00 99**	
Tube S (500 mm)	**57.03 02 05**	3520	**57.04 02 05**	4340
Tube S (1000 mm)	**57.03 02 10**	5290	**57.04 02 10**	6580
Tube S special length	**57.03 02 99**		**57.04 02 99**	
Tube J (500 mm)	**57.03 01 05**	3510	**57.04 01 05**	4330
Tube J (750 mm)	**57.03 01 07**	5970	**57.04 01 07**	7450
Tube J (1000 mm)	**57.03 01 10**	6850	**57.04 01 10**	8560
Tube J special length	**57.03 01 99**		**57.04 01 99**	

Load diagram

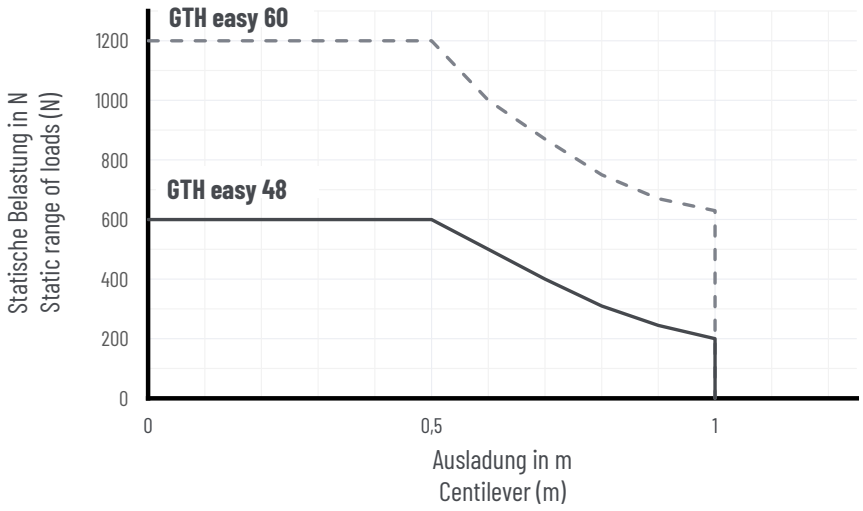

GTH 48 easy / GTH 60 easy

Components

Top-mounted joint



Order No.	for tube	A	B	C	D	E	F	G
GTH 48 easy								
57.03 66 00	Ø 48	119	81,7	40	46	46	40	10
GTH 60 easy								
57.04 66 00	Ø 60	119	96,7	50	46	46	50	10

Swivelling range 330°

Suitable for tensile, compressive and tangential loads.

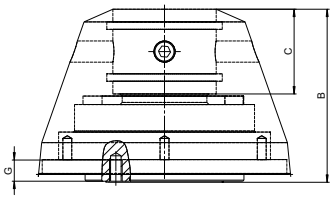

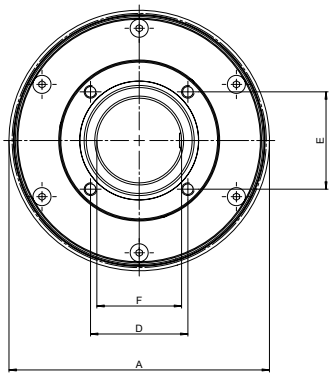

Coupling



Order No.	for tube	A	B	C	D	E	F	G
GTH 48 easy								
57.03 73 00	Ø 48	82	57,6	30	33,6	33,6	40	13
GTH 60 easy								
57.04 73 00	Ø 60	112	76,2	40	46	46	50	13

Swivelling range 330°

Suitable for tensile and compressive loads.

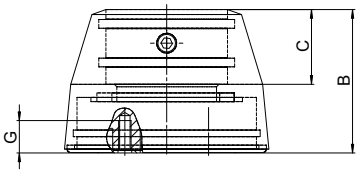

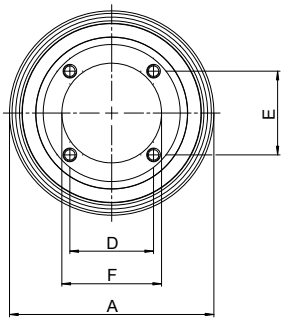

Components

Console adapter



Order No.	for tube	A	B	C	D	E	F	G
GTH 48 easy								
57.03 76 00	Ø 48,3	82	30	9,6	33,6	33,6	40	14°
GTH 60 easy								
57.04 76 00	Ø 60,3	112	33	5	46	46	50	14°

Angle of inclination 14°

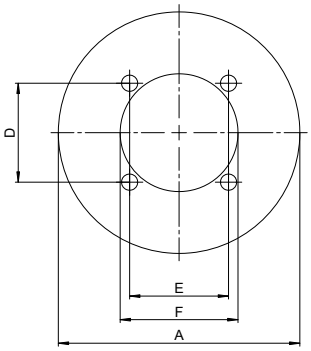

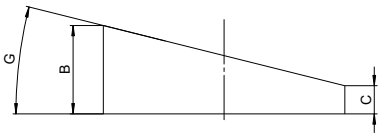

GTH 48 easy / GTH 60 easy

Components

Wallconsole



for adaption top-mounted joint or coupling

Order No.	for tube
GTH 48 easy	
57.03 79 00	Ø 48
GTH 60 easy	
57.04 79 00	Ø 60

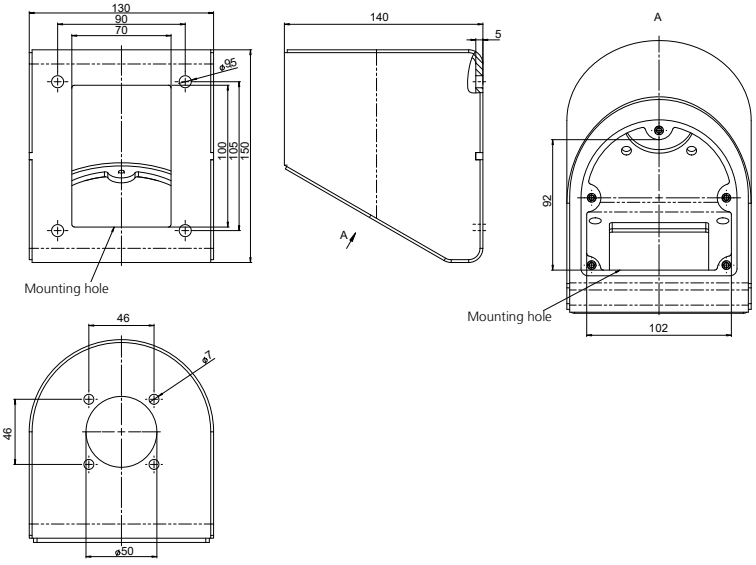

Connecting tube I



Order No.	L1 (mm)	A (außen Ø)	B (innen Ø)	Weight (g)
GTH 48 easy				
57.03 00 05	500	48,3	41,9	1760
57.03 00 10	1000	48,3	41,9	3530
57.03 00 15	1500	48,3	41,9	5300
57.03 00 99	special length	48,3	41,9	-
GTH 60 easy				
57.04 00 05	500	60,3	53,1	2490
57.04 00 10	1000	60,3	53,1	4990
57.04 00 15	1500	60,3	53,1	7500
57.04 00 99	special length	60,3	53,1	-

max. length L1 = 1000 mm

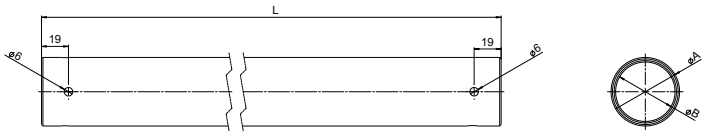

Components

Connecting tube S



Order No.	L1	L2	L3	A	B	Rm	Weight (g)
GTH 48 easy							
57.03 02 05	500	300	300	48,3	41,9	120	3520
57.03 02 10	1000	300	300	48,3	41,9	120	5290
57.03 02 99	special length			48,3	41,9	120	-
GTH 60 easy							
57.04 02 05	500	300	300	60,3	53,1	150	4340
57.04 02 10	1000	300	300	60,3	53,1	150	6580
57.04 02 99	special length			60,3	53,1	150	-

max. length L1 = 1000 mm

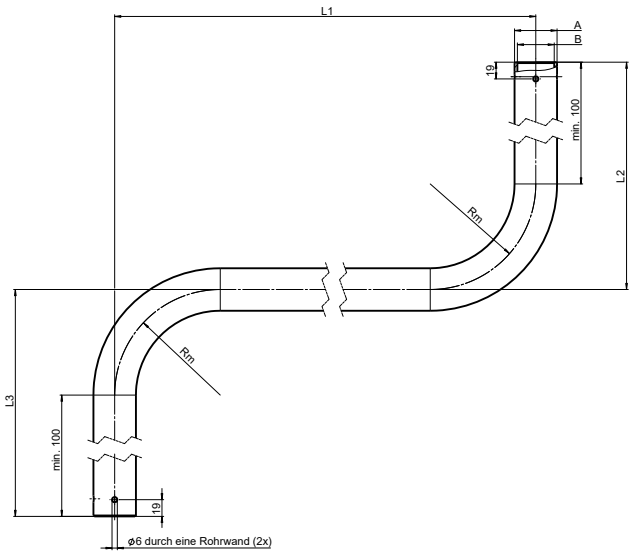

Connecting tube J



Product info:
Individual lengths and executions on request.

Order No.	L1	L2	L3	A	B	Rm	Weight (g)
GTH 48 easy							
57.03 01 05	500	300	300	48,3	41,9	120	3510
57.03 01 07	750	750	300	48,3	41,9	120	5970
57.03 01 10	1000	750	300	48,3	41,9	120	6850
57.03 01 99	special length			48,3	41,9	120	-
GTH 60 easy							
57.04 01 05	500	300	300	60,3	53,1	150	4330
57.04 01 07	750	750	300	60,3	53,1	150	7450
57.04 01 10	1000	750	300	60,3	53,1	150	8660
57.04 01 99	special length			60,3	53,1	150	-

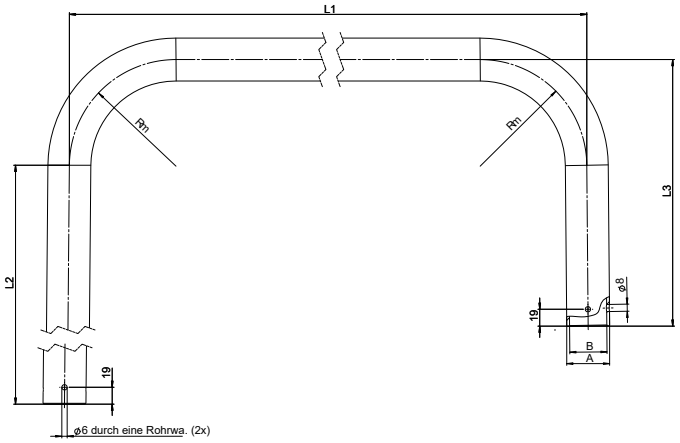

GTH 48 easy / GTH 60 easy

Enquiry ☐ Order ☐

Please copy, complete and send to: hmi@rose-pw.de

Company _____ Telephone _____

Contact _____ Fax _____

Address _____ E-Mail _____

Suspension system ☐ GTH 48 easy ☐ GTH 60 easy Quantity _____

System consisting of the following components:

Components, side A

- ☐ Coupling
- ☐ EMC coupling
- ☐ Coupling for external tube fitting
- ☐ Top-mounted joint
- ☐ EMC top-mounted joint
- ☐ Top-mounted joint for external tube fitting
- ☐ Foot stand
- ☐ Foot stand for ceiling mounting
- ☐ Foot stand with cable outlet
- ☐ Foot stand (ceiling mounting) with cable outlet
- ☐ Console adapter
- ☐ Wall console

Connecting tube

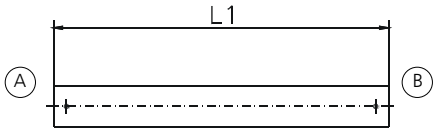

I-tube (L1)

- ☐ 500 mm
- ☐ 1000 mm
- ☐ 1500 mm
- ☐ Special length _____ mm

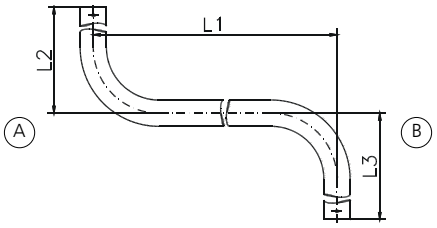

S-tube (L1/L2/L3)

- ☐ 500/300/300 mm
- ☐ 1000/300/300 mm
- ☐ Special length* _____ / _____ /_____ mm

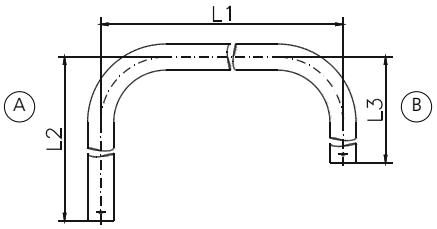

J-tube (L1/L2/L3)

- ☐ 500/300/300 mm
- ☐ 750/750/300 mm
- ☐ 1000/750/300 mm
- ☐ Special length* _____ / _____ /_____ mm

* Attention: measure dimension tube center
min. lengths L2 and L3: 280 mm
max. lengths L1 = 1000 mm

Components, side B

- ☐ Coupling
- ☐ Top-mounted joint
- ☐ Console adapter
- ☐ Wall console

GT 48/2

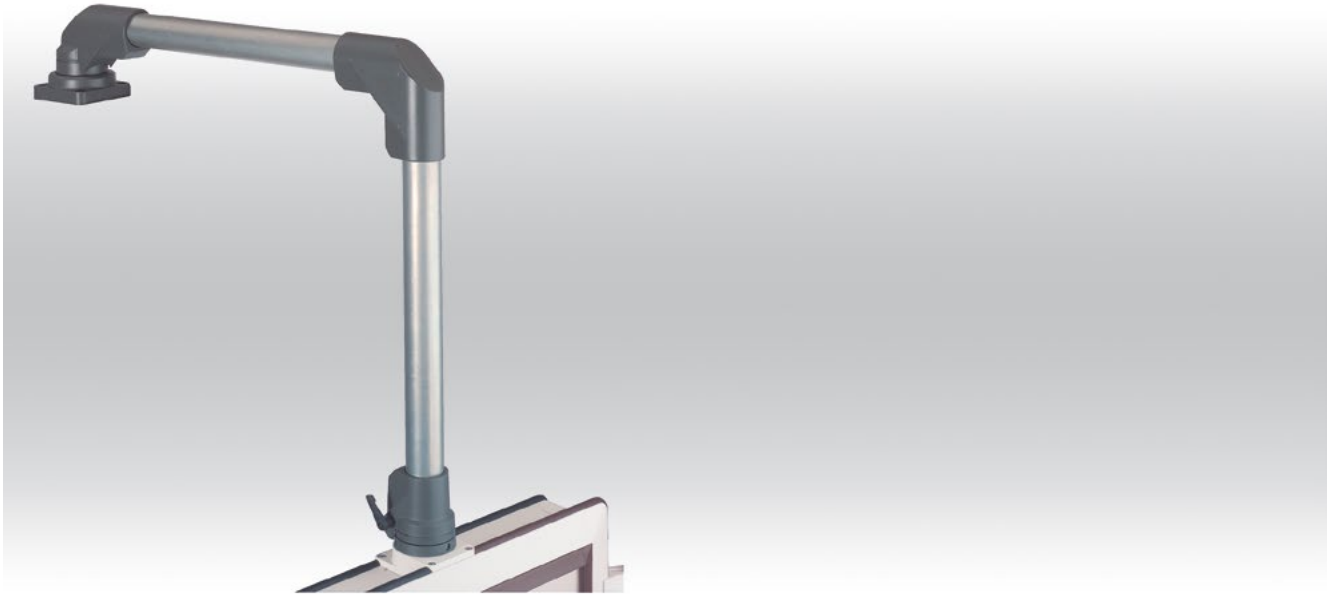

+ Industrial round tube system for commander systems
+ Modular construction for individual components
+ Protected internal cable routing

Included in delivery
Individual system components incl. assembly materials

Technical data

Material	Connecting tube: steel 48 x 4 mm DIN 2393-St. 37 Components: DIN EN 1706 EN AC-AlSi 12 (Fe)
Painting	Powder coating
Colour	Tube: galvanized Components: RAL 7043, traffic grey B, Special colour on request
Ingress protection	IP 54 to EN 60529

GT 48/2

Product range

Type	Order No.	Weight (g)
Top-mounted joint	**49.49 66 00**	2070
Foot stand, fixed	**49.49 72 00**	739
Foot stand, turnable	**49.49 68 00**	1840
Wall hinge W	**49.49 70 00**	2920
Wall hinge S	**49.49 62 00**	2660
Angle	**49.49 71 00**	927
Coupling	**49.49 73 00**	988
Flange coupling	**49.49 77 00**	859
Flange coupling GT 48/2-PRO	**49.49 77 02**	1060
Angle coupling	**49.49 75 00**	1220
Flange angle coupling	**49.49 78 00**	1090
Flansch angle coupling GT 48/2-PRO	**49.49 78 02**	1290
Console flange 30°	**49.49 76 00**	319
Adapter flange	**49.49 79 00**	2000
Inclining adapter	**49.49 80 00**	818
Adapter plate GT 48/2-PRO	**49.45 00 01**	175

Connecting tube	Order No.	Weight (g)
Standard length: 0,5 m	**10.09 42 16**	2180
Standard length: 1 m	**10.09 42 17**	4350
Standard length: 2 m	**10.09 42 18**	8700
Standard length: 3 m	**10.09 42 19**	13050
Variable length (please specify)	**10.09 41 58**	

Load diagram

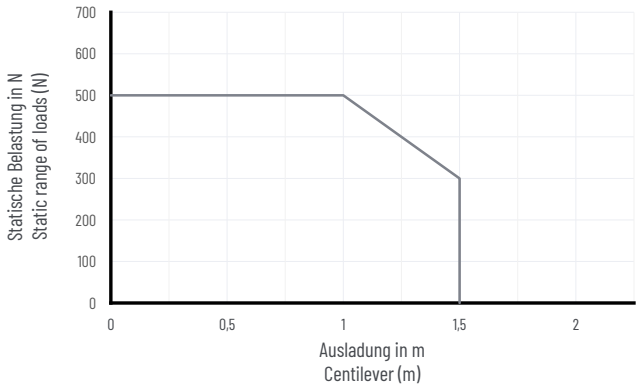

Note: the vertical length of the profile is responsible for the load of the complete suspension system (lever arm!).
Further information for this on request. The values in the above load diagram are gulty to an execution hanging or standing.
The declarations of weight are a summary from installation weight, Commander and all components and tubes between Commander and angle.

System structure

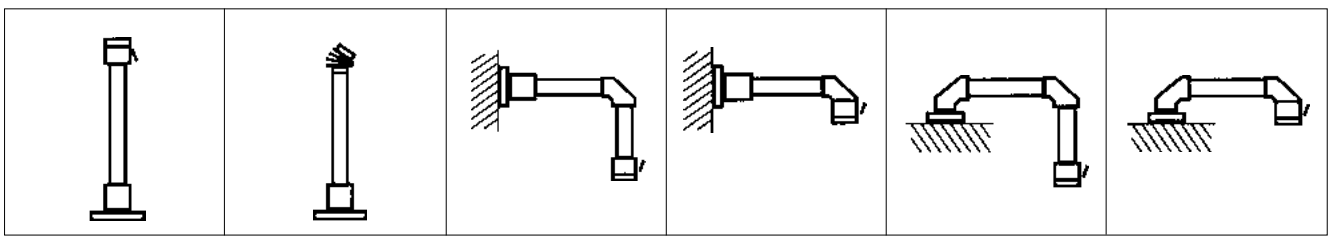

Components

Top mounted joint



Order No.	Execution
49.49 66 00	Diecast aluminium with steel inner tube and flange mounting. Swivelling range 250°

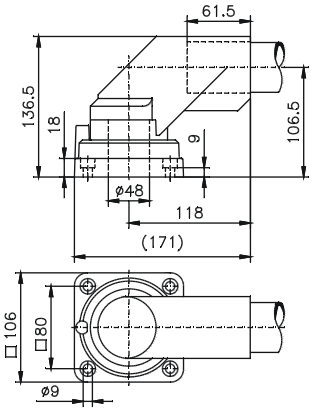

Wall hinge W (horizontal)



Order No.	Execution
49.49 70 00	Diecast aluminium with steel inner tube and flange mounting. Swivelling range 250°

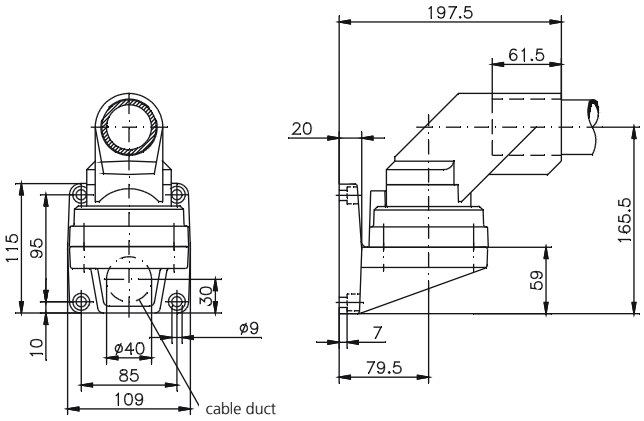

Wall hinge S (vertical)



Order No.	Execution
49.49 62 00	Diecast aluminium with steel inner tube and flange mounting. Swivelling range 250°

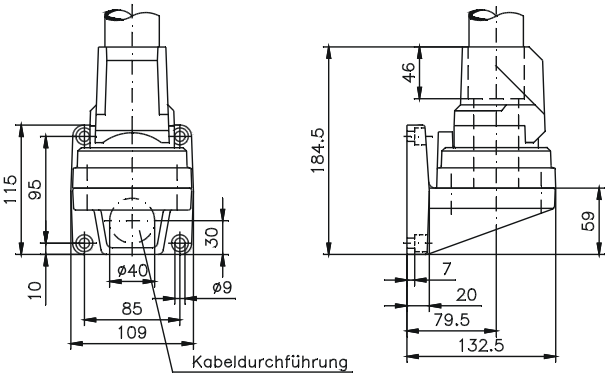

GT 48/2

Components

Angle



Order No.	Execution
49.49 71 00	Diecast aluminium. Angle 90°

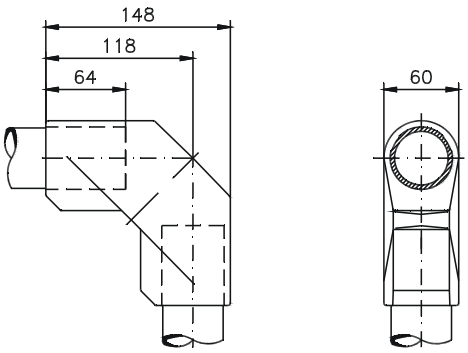

Coupling



Order No.	Execution
49.49 73 00	Diecast aluminium with steel inner tube. Swivelling range 270°. Lockable with clamping lever.

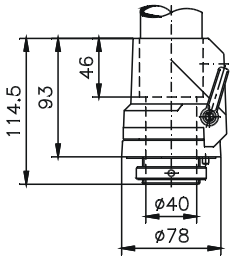

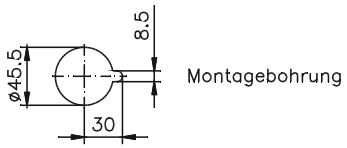

Foot stand fixed



Order No.	Execution
49.49 72 00	Diecast aluminium, fixed version

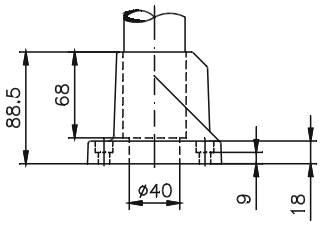

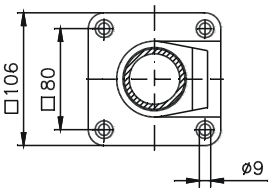

Components

Foot stand turnable



Order No.	Execution
49.49 68 00	Diecast aluminium with steel inner tube and flange mounting. Swivelling range 250°

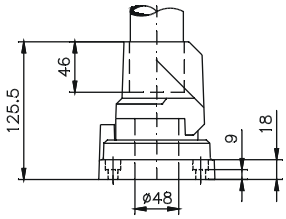

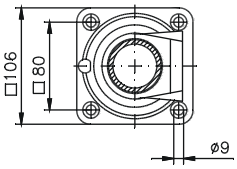

Flange coupling



Order No.	Execution
49.49 77 00	Diecast aluminium with steel inner tube. Swivelling range 270°. Lockable with clamping lever.

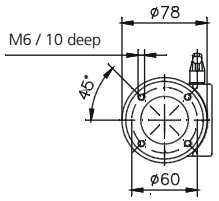

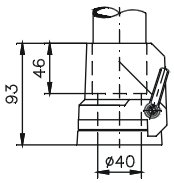

Flange coupling GT 48/2 Pro



Order No.	Execution
49.49 77 02	for direct mounting of Siemens Pro command units. Diecast aluminium with steel inner tube. Swivelling range 270°. Lockable with clamping lever.

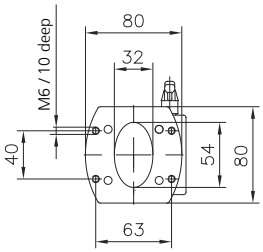

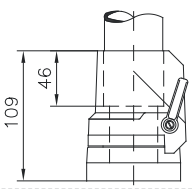

GT 48/2

Components

Angle coupling



Order No.	Execution
49.49 75 00	Combination of angle and coupling for horizontal tube exit. Cast aluminium with steel inner tube. Swivelling range 270°. Lockable with clamping lever

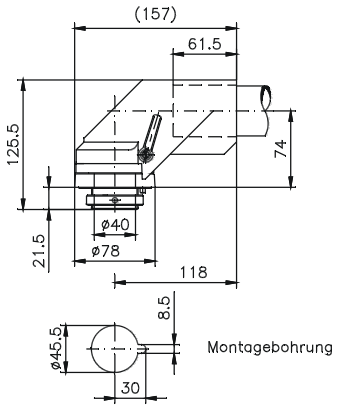

Flange angle coupling



Order No.	Execution
49.49 78 00	Combination of angle and coupling for horizontal tube exit. Diecast aluminium with steel inner tube. Swivelling range 270°. Lockable with clamping lever

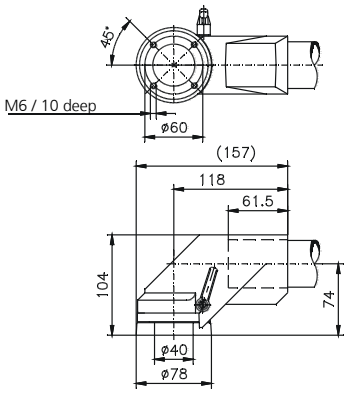

Flange angle coupling GT 48/2 Pro



Order No.	Execution
49.49 78 02	for direct mounting of Siemens Pro command units Combination of angle and coupling for horizontal tube exit. Cast aluminium with steel inner tube. Swivelling range 270°. Lockable with clamping lever

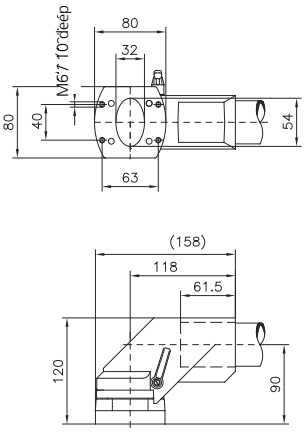

Components

Console flange



Order No.	Execution
49.49 76 00	Aluminium incl. screws and seal, fixed inclination 30°

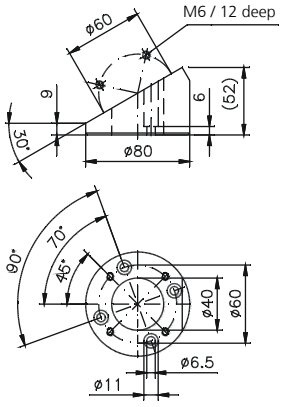

Adapter flange



Order No.	Execution
49.49 79 00	Cast steel part for mounting between wall and wall hinge for free cable routing, cable opening top or bottom as required.

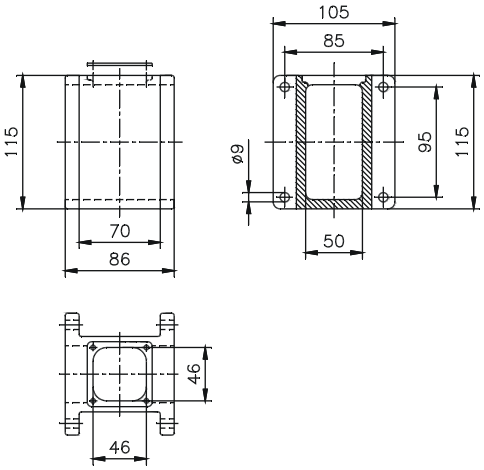

Inclining adapter



Order No.	Execution
49.49 80 00	Diecast aluminium part with bellow and seal, inclination can be adjusted to any angle between 0° and 45°. max. loading: 25 kg

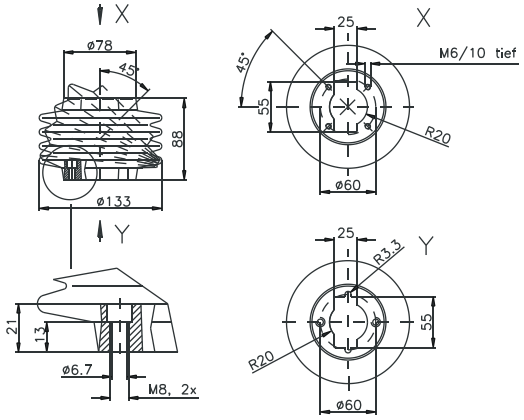

GT 48/2

Components

Adapter plate GT 48/2 Pro



Order No.	Execution
49.49 00 01	for connecting GT 48/2 elements with Siemens Pro command units (not relevant for flange coupling GT 48/2 Pro and flange angle coupling GT 48/2 Pro)

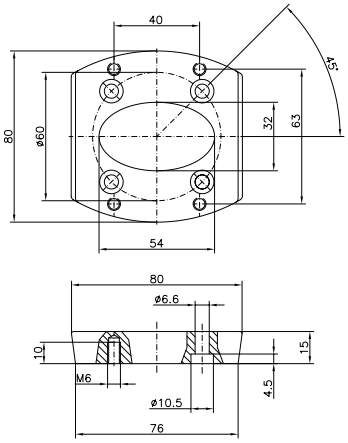

GT50/2 GT60/2 GT80/2

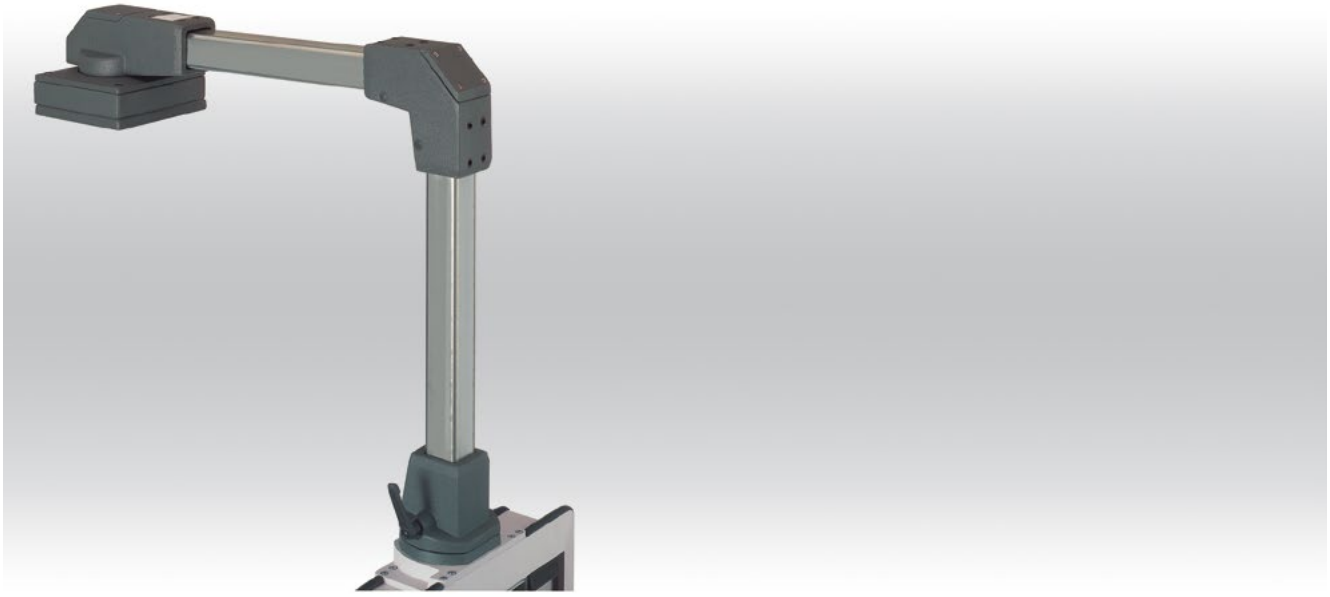

+ Robust industrial square tube suspension system
+ Modular construction for individual components
+ High loading capacity, large extention

Included in delivery
Individual system components incl. assembly material

Technical data

Material	Connecting tube: square steel tube simmilar DIN EN 10305-5 Wall thickness 5 mm Components: DIN EN 1706 EN AC-AlSi 12 (Fe)
Painting	Powder coating
Colour	Tube: galvanized Components: RAL 7043, traffic grey B, Special colour on request
Ingress protection	IP 65 to EN 60529

GT50/2 GT60/2 GT80/2

Product range

	GT 50/2		GT 60/2		GT 80/2	
Type	Order No.	Weight (g)	Order No.	Weight (g)	Order No.	Weight (g)
Top-mounted joint			**49.61 66 00**	16000	**49.81 66 00**	21000
Foot stand, cast steel	**49.51 74 00**	2880	**49.61 74 00**	3650	**49.81 74 00**	5440
Wall hinge	**49.51 70 00**	5460	**49.61 70 00**	7780	**49.81 70 00**	11000
Adapter flange	**49.51 79 00**	2800	**49.61 79 00**	3750	**49.81 79 00**	6020
Intermediate joint	**49.51 67 00**	5940	**49.61 67 00**	8370	**49.81 67 00**	12000
Angle, cast steel	**49.51 80 00**	4180	**49.61 80 00**	5630	**49.81 80 00**	7920
Flange angle coupling			**49.61 78 00**	3240	**49.81 78 00**	4610
Coupling					**49.81 73 00**	2680
Flange coupling			**49.61 77 00**	2600	**49.81 77 00**	4560
Console adapter 30°	**49.51 76 00**	901	**49.61 76 00**	1270	**49.81 76 00**	2240
Signal fitting	**49.51 80 10**	211	**49.61 80 10**	267	**49.81 80 10**	339
Adapter plate GTK on GT 80/2; GT 60/2					**49.81 10 00**	829
Column	**49.51 00 04**		**49.61 00 04**		on request	

Connecting tube	GT 50/2		GT 60/2		GT 80/2	
	Order No.	Weight (g)	Order No.	Weight (g)	Order No.	Weight (g)
Standard length: 0,5 m	**10.09 42 20**	3330	**10.09 42 23**	4120	**10.09 42 27**	5690
Standard length: 1 m	**10.09 42 21**	6660	**10.09 42 24**	8230	**10.09 42 28**	11000
Standard length: 2 m	**10.09 42 22**	13000	**10.09 42 25**	16000	**10.09 42 29**	23000
Standard length: 3 m	**10.09 42 42**	20000	**10.09 42 26**	25000	**10.09 42 30**	34000
Variable length (please specify)	**10.09 41 56**		**10.09 41 57**		**10.09 41 59**	

Load diagram

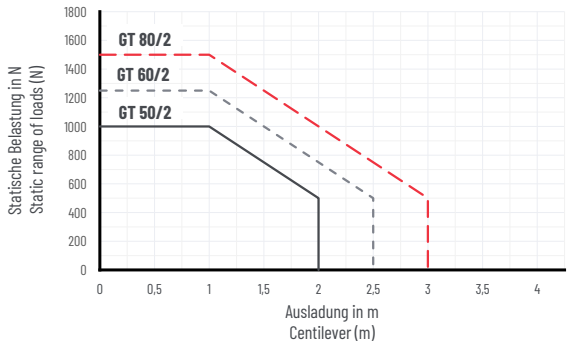

Note: the vertical length of the profile is responsible for the load of the complete suspension system (lever arm!).
Further information for this on request. The values in the above load diagram are gulty to an execution hanging or standing.
The declarations of weight are a summary from installation weight, Commander and all components and tubes between Commander and angle.

System structure

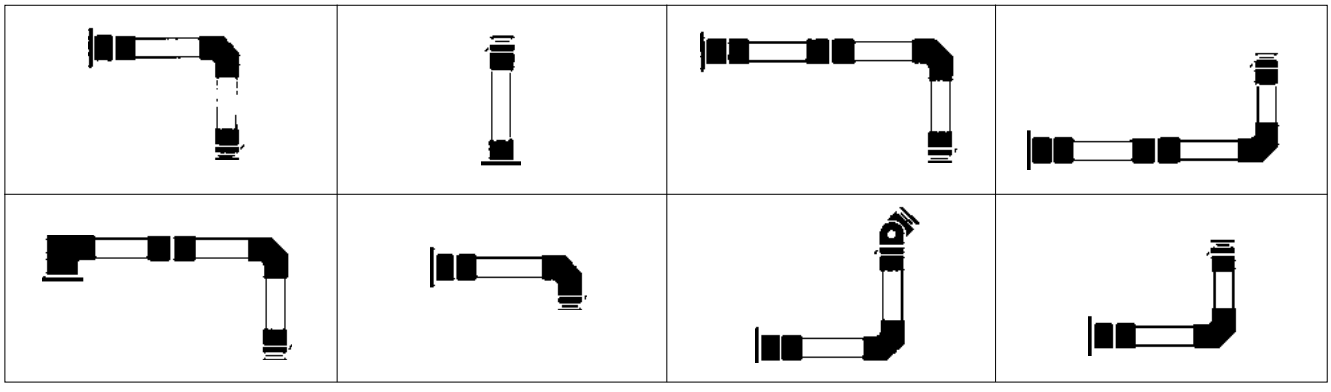

Components

Top-mounted joint



Type	Order No.	Weight (g)	A	B	C	D	E	F	G	H	J	K	L
60/2	**49.61 66 00**	16000	278	179,5	110	195	58	44,5	60	171	38	165	125
80/2	**49.81 66 00**	21000	306	197,5	125	215	76	54,5	80	206	46	185	145

Swivelling range 310°, can be limited from between 0° to 270°, swivel force can be adjusted via bearing screw

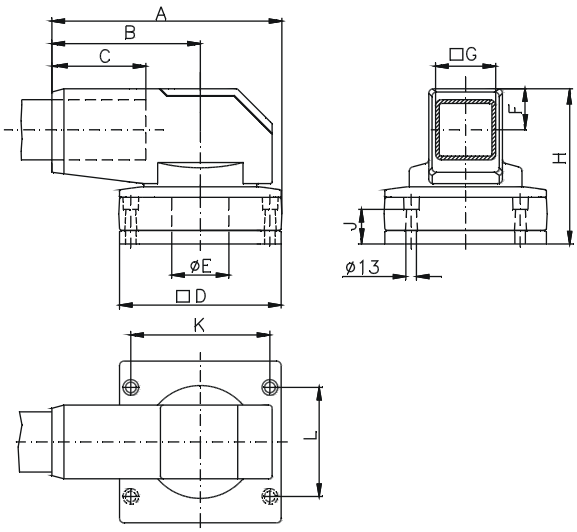

Foot stand



Type	Order No.	Weight (g)	A	B	C	D	E	F	G	H	K	L	M
50/2	**49.51 74 00**	2880	128	90	80	12	20,5	19,5	40	100	57	71	12
60/2	**49.61 74 00**	3650	138	100	90	14	25,5	24,5	50	110	63	77	12
80/2	**49.81 74 00**	5440	162	115	105	16	35,5	34,5	80	130	74,5	90,5	14

Cast steel element for floor mounting or wall mounting, can be adjusted

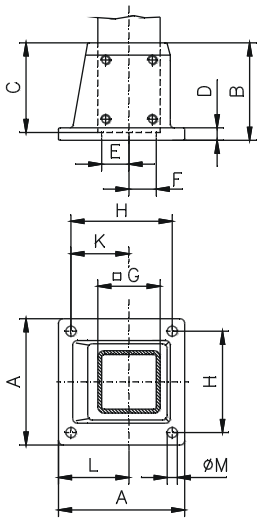

GT50/2 GT60/2 GT80/2

Components

Wall hinge



Type	Order No.	Weight (g)	A	B	C	D	E	F	G	H	J	K	L	M	N	O	P	R	S
50/2	**49.51 70 00**	5460	140	90	95	12	132	125	40	50	58	164	107	50	27,5	48	35	11	12
60/2	**49.61 70 00**	7780	162	102	110	15	140	145	45	60	62	176	115	60	32,5	57	44,5	15	12
80/2	**49.81 70 00**	11000	185	137	125	20	161	178	56	80	75	210	138	80	43,5	68	67	25	14

Swivelling range 180° , can be limited to stepped degrees with stops, swivel force can be adjusted via bearing screw.

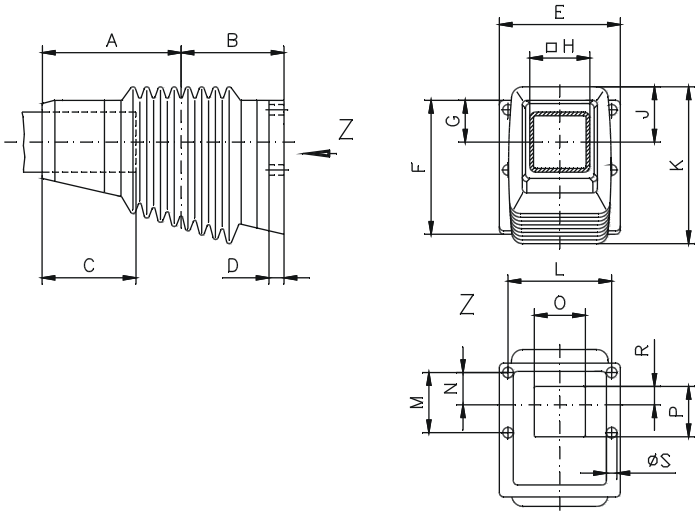

Adapter flange for wall hinge



Type	Order No.	Weight (g)	A	B	C	D	E	F	G	H	J	K	L
50/2	**49.51 79 00**	2800	66	132	125	46	57	89	100	107	12	0	12
60/2	**49.61 79 00**	3750	72	140	145	52	65	109	120	115	15	0	12
80/2	**49.81 79 00**	6020	82	161	178	62	86	142	153	138	20	7	15

Cast steel adapter for mounting between wall hinge and mounting surface

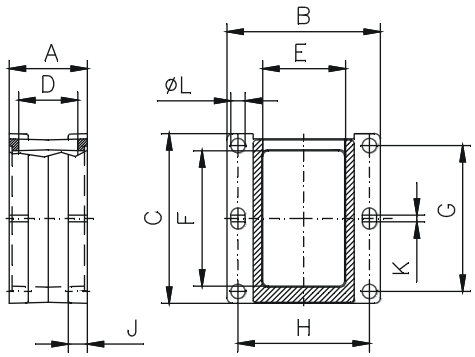

Intermediate joint



Type	Order No.	Weight (g)	A	B	C	D	E	F
50/2	**49.51 67 00**	5940	140	95	107	58	152	50
60/2	**49.61 67 00**	8370	162	110	114	62	162	60
80/2	**49.81 67 00**	12000	185	125	136	75	190	80

Swivelling range 180°, can be limited to stepped degrees with stops, swivel force can be adjusted via bearing screw.

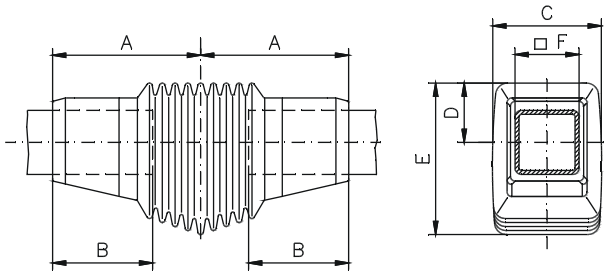

Components

Flange coupling



Type	Order No.	Weight (g)	A	B	C	D	E	F	G	H	J	K	L	M
60/2	**49.61 77 00**	2600	124	117	59,5	58	65	136,5	141	60	57	77	-	-
80/2	**49.81 77 00**	4560	151	141	70,5	80	87	166	175	80	84	104	60	130

Swivelling range 325° can be stopped at any point with clamping lever, stops can limit movement in 25° steps

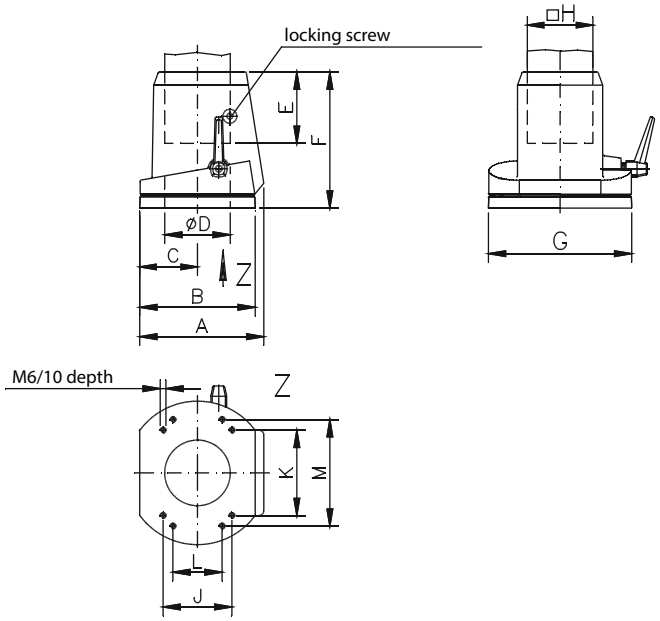

Flange angle coupling



Type	Order No.	Weight (g)	A	B	C	D	E	F	G	H	J	K	L	M	N
60/2	**49.61 78 00**	3240	216,5	158	90	117	141	58	60	130,5	42,5	77	57	-	-
80/2	**49.81 78 00**	4610	276,5	206	107	141	175	80	80	160	55,5	104	84	130	60

Swivelling range 325° can be stopped at any point with clamping lever, stops can limit movement in 25° steps. Angle flange coupling cannot be used as top-mounted joint!

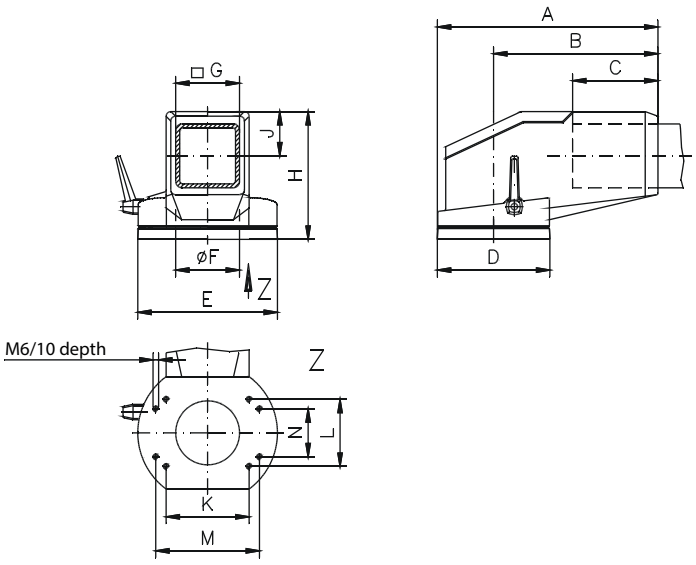

GT50/2 GT60/2 GT80/2

Components

Angle



Cast steel angle joint 90°

Type	Order No.	Weight (g)	A	B	C	D	E
50/2	**49.51 80 00**	4180	154	115	80	74	50
60/2	**49.61 80 00**	5630	172	128	90	84	60
80/2	**49.81 80 00**	7920	210	157	105	98	80

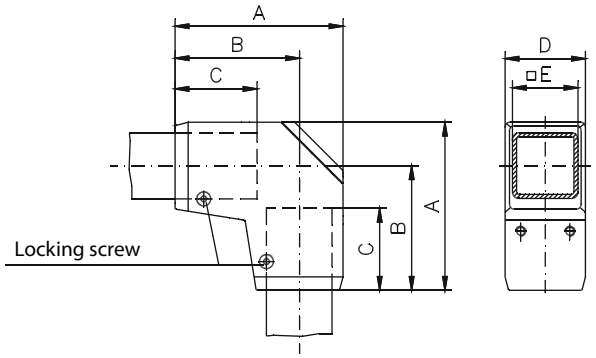

Signal fitting



Cast aluminium part for mounting indicator lights on the angle.

Type	Order No.	Weight (g)	A	B	C	D	E	F
50/2	**49.51 80 10**	211	74	60	36	54	29	38
60/2	**49.61 80 10**	267	84	65	40	62	32	43
80/2	**49.81 80 10**	339	98	76	54	82	42	54

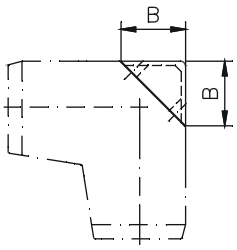

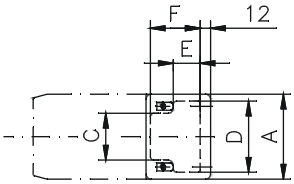

Adapter GTK on GT 80/2; GT 60/2



Order No.

49.81 10 00

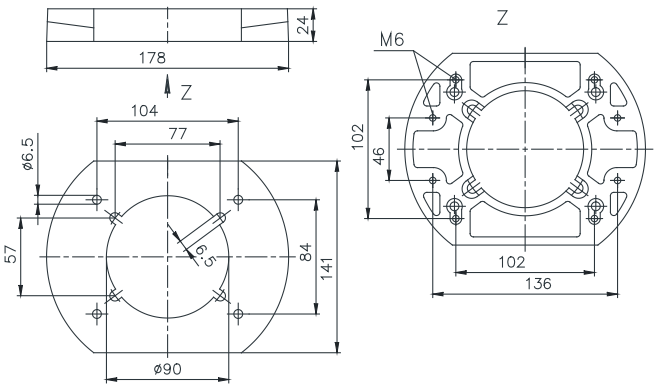

Components

Coupling



Type	Order No.	Weight (g)	A	B	C	D	E	F	G	H	K	L	M	N	O
80/2	**49.81 73 00**	2680	104	80	104	145,5	115	M90 x 2	80	49	34	90,8	91	10,2	111

Swivelling range 300° can be stopped at any point with clamping lever.

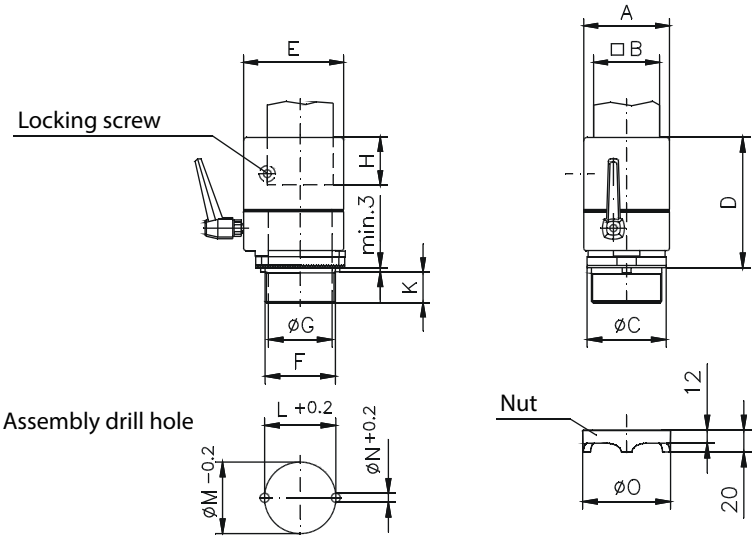

Column



Sheet steel, painted, individual length including adapter plate for top mounted joint. At the base flange outlet max. length 2 m.

Order No.		A	B
49.51 00 04	GT 50/2 (please specify complete length)	116	150
49.61 00 04	GT 60/2 (please specify complete length)	125	165
on request	GT 80/2		

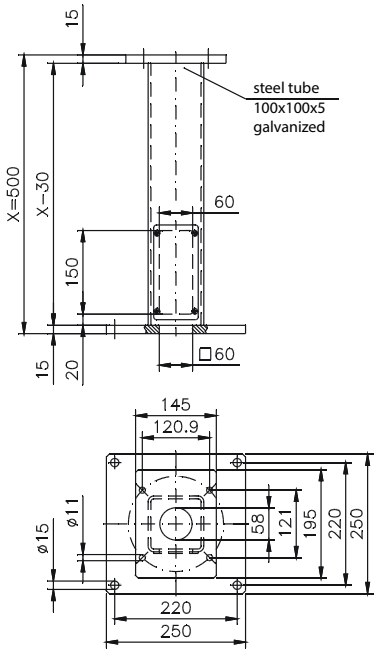

GT50/2 GT60/2 GT80/2

Components

Console adapter



Type	Order No.	Weight (g)	A	B	C	D	E	F	G	H	K	L	M
50/2	**49.51 76 00**	901	107	131	71	92	57	77	-	-	14	-	50
60/2	**49.61 76 00**	1270	117	141	76	102	57	77	-	-	18	-	60
80/2	**49.81 76 00**	2240	141	175	89	128	84	104	60	130	17	35	80

Cast aluminium part with fixed 30° inclination for assembly between enclosure and flange coupling
GT 50/2, GT 60/2 and GT 80/2.

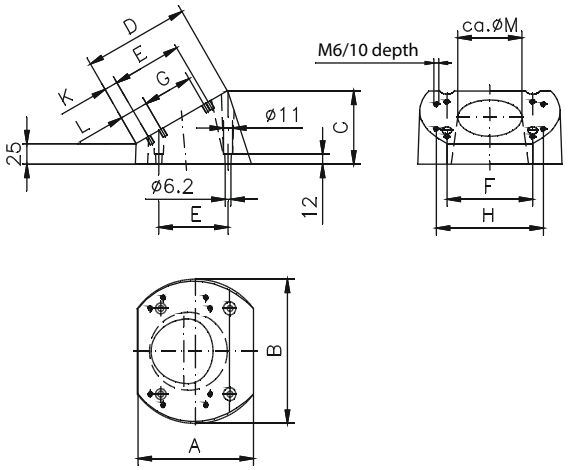

GTK 80

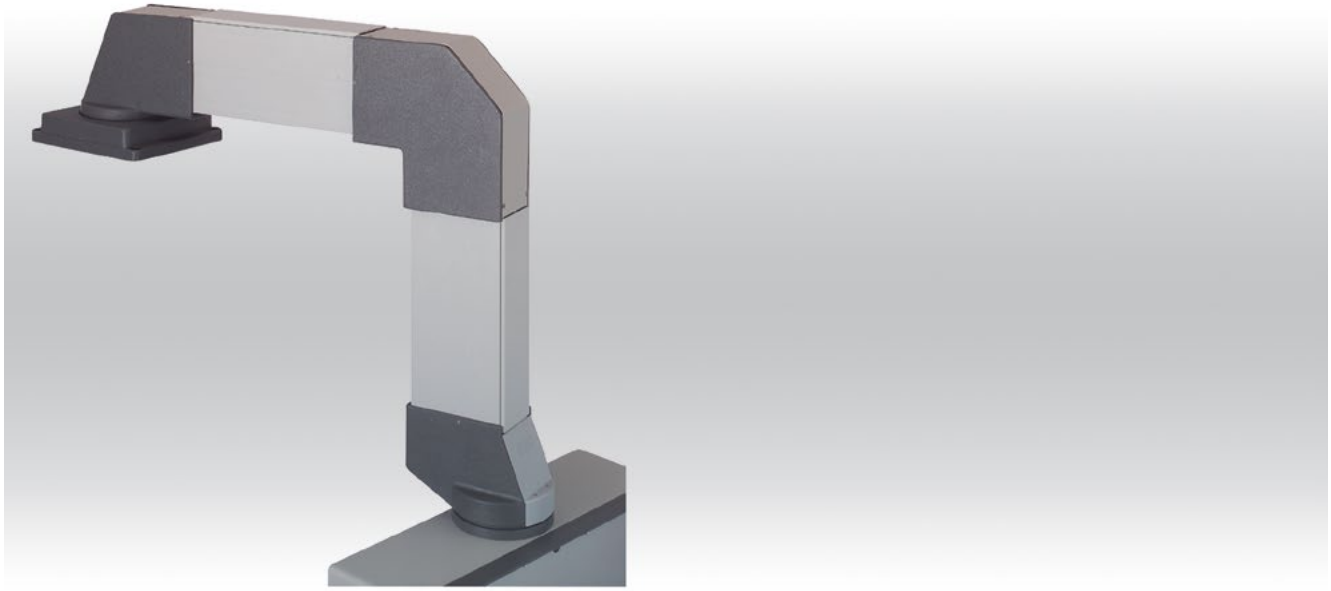

+ Industrial square suspension system with free accessible cable channel
+ Modular construction with free accessible cable duct
+ Floor, top-mounting or wall options

Included in delivery
Individual system components incl. cable duct covering and assembly materials

Technical data

Material	Connecting tube: Square ST 37 similar DIN EN 10305-5 wall thickness 5 mm or 8 mm Components: spheroidal graphite cast iron and/or cast aluminium Cable duct / cover: aluminium extruded profile Bearing: ball bearing Bellow: textile fabric
Painting	Powder coating
Colour	Cable duct / cover: RAL 7035, light grey Components: RAL 7043, traffic grey B, Special colour on request
Ingress protection	with top-mounted flange IP 54 to EN 60529

GTK 80

Product range

Type	Order No.	Weight (g)
Top-mounted joint	**49.90 66 01**	17000
Foot stand / wall flange	**49.90 74 01**	6960
Wall hinge	**49.90 70 01**	19000
Intermediate joint	**49.90 67 01**	16000
Angle (FH) cast steel	**49.90 71 11**	11000
Angle (AS) Aluminium	**49.90 71 20**	3470
Angle coupling	**49.90 75 01**	5770
Coupling	**49.90 73 01**	5250
Top-mounted flange type A	**49.90 00 30**	1330
Top-mounted flange type B	**49.90 00 20**	1150

	Cable duct (standard length to fit relevant suspension tube)	Weight (g)	Suspension tube 80 x 80 x 5 mm	Weight (g)	Suspension tube 80 x 80 x 8 mm	Weight (g)
Standard length: 0,5 m	**10.09 42 35**	1350	**10.09 42 27**	5800	**10.09 42 31**	8400
Standard length: 1 m	**10.09 42 36**	2920	**10.09 42 28**	11600	**10.09 42 32**	17000
Standard length: 2 m	**10.09 42 37**	6060	**10.09 42 29**	23200	**10.09 42 33**	34000
Standard length: 3 m	**10.09 42 38**	9200	**10.09 42 30**	34800	**10.09 42 34**	50000
Variable length (please specify)	**10.09 41 65***		**10.09 41 59**		**10.09 41 68**	

*** The cable duct needs to be 175 mm shorter than the suspension tube length!**

Load diagram

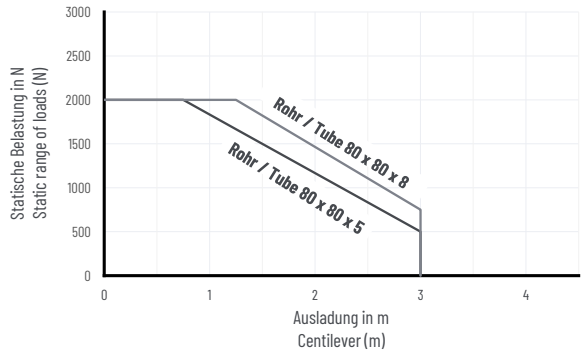

Note: the vertical length of the profile is responsible for the load of the complete suspension system (lever arm!). Further information for this on request. The values in the above load diagram are gulty to an execution hanging or standing.
The declarations of weight are a summary from installation weight, Commander and all components and tubes between Commander and angle.

System structure

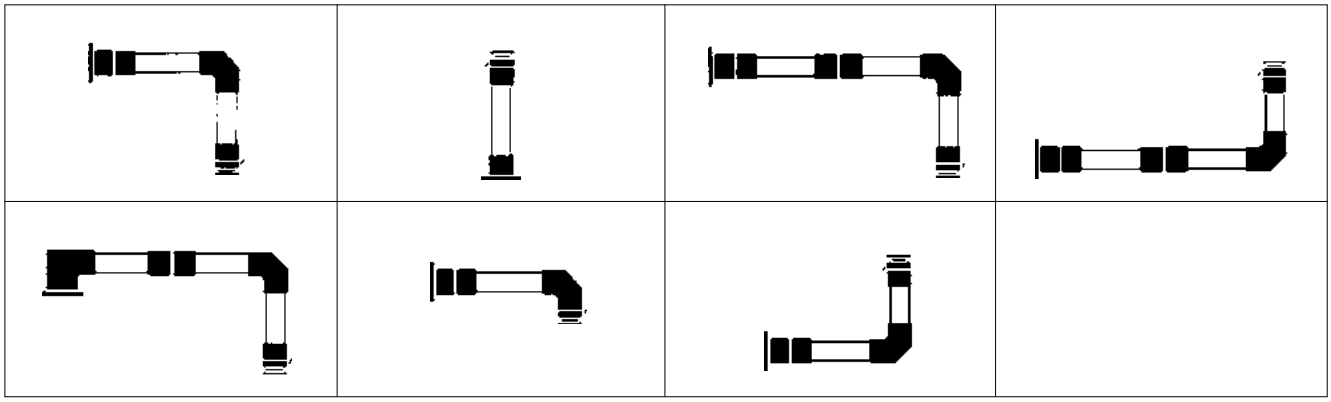

Components

Top-mounted joint



Order No.	Execution
49.90 66 01	Cast iron. Swivelling range 360°

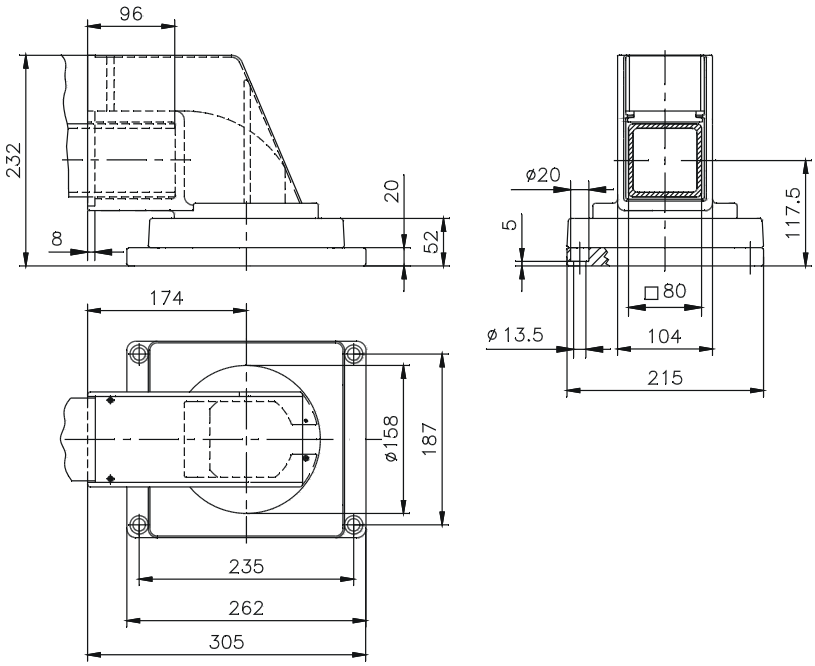

Foot stand / wall flange



Order No.	Execution
49.90 74 01	Cast iron

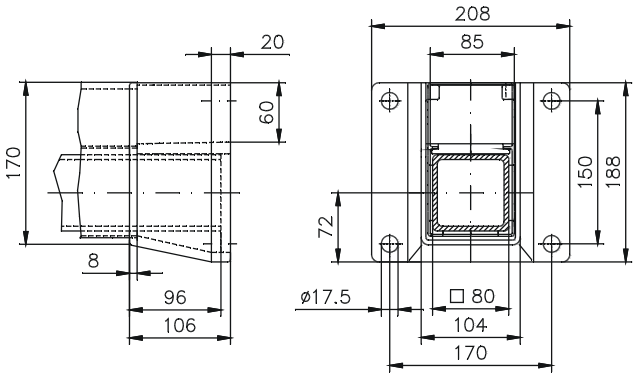

GTK 80

Components

Wall hinge



Order No.	Execution
49.90 70 01	Cast iron. Swivelling range 180°

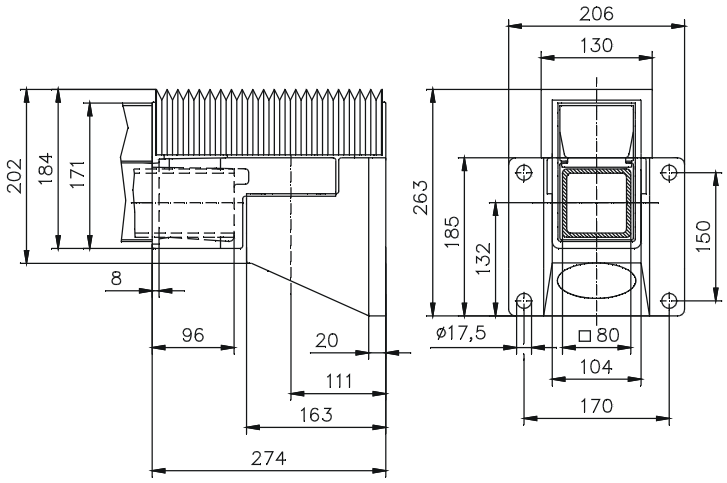

Intermediate joint



Order No.	Execution
49.90 67 01	Cast iron. Swivelling range 180°

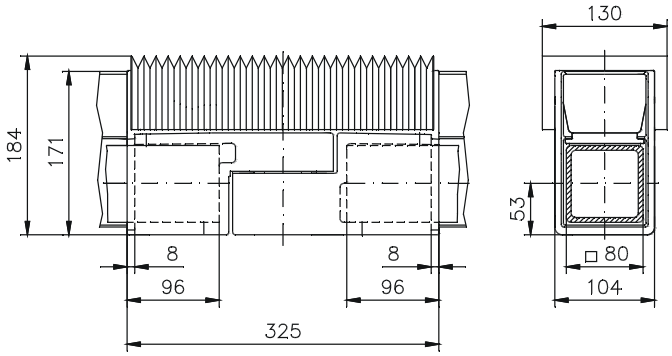

Angle (FH)



Order No.	Execution
49.90 71 11	Cast iron. 90°-angle for use with high bending loads

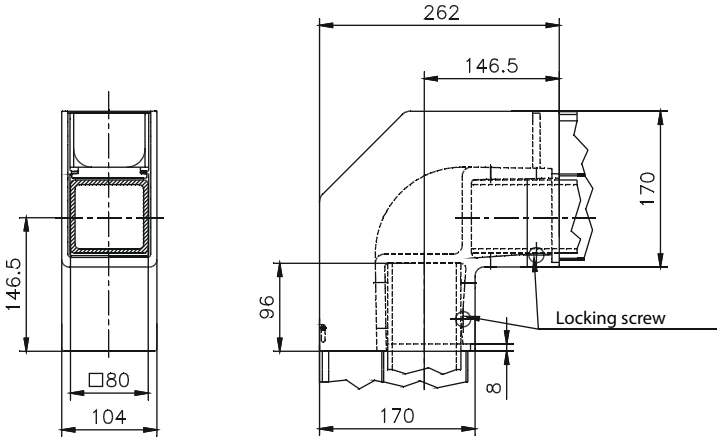

Components

Angle (AS)



Order No.	Execution
49.90 71 20	Cast aluminium. 90°-angle for vertical construction from the bottom up with minimal bending load

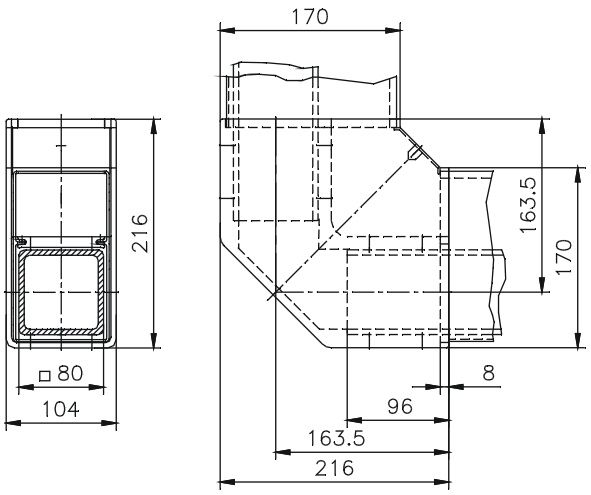

Coupling



Order No.	Execution
49.90 73 01	Cast aluminium. Swivelling range 320° Lockable with clamping lever.

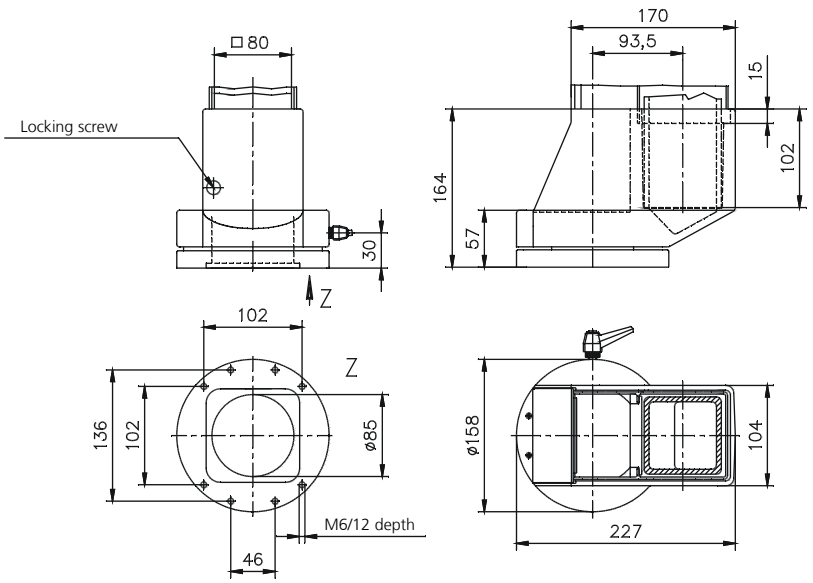

GTK 80

Components

Angle coupling



Order No.	Execution
49.90 75 01	Cast aluminium. Swivelling range 320°. Lockable with clamping lever.

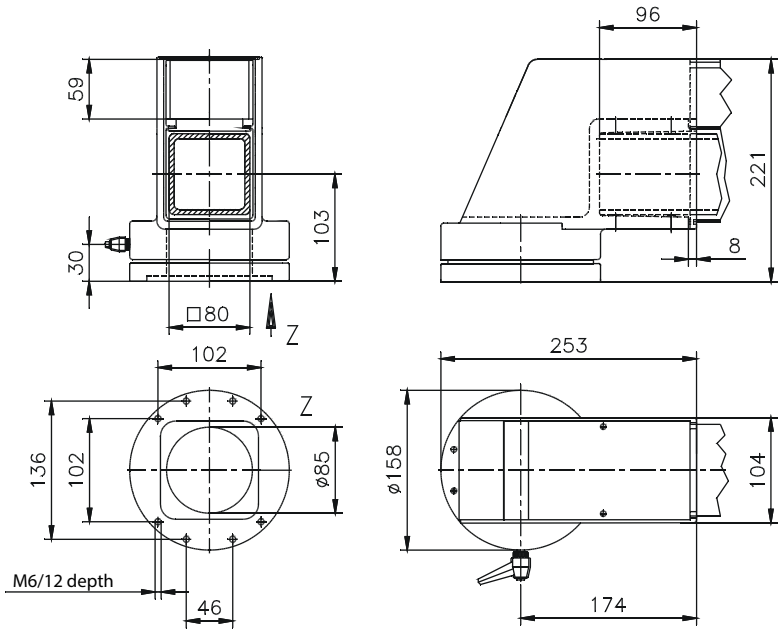

Top-mounted flange



Fitted in combination with coupling or angle coupling to maintain compliance with enclosure rating IP 65 at transition to control panel.

Order No.	Execution
49.90 00 30	Type A: Cast aluminium Large area mounting on enclosure for maximum 3 ready-made leads with diameters from 7 to 26 mm. Open cable entry.
49.90 00 20	Type B: Cast aluminium Large area mounting on enclosure for a large number of ready-made leads. Sealed with special cable glands or threaded cable connectors. Open cable entry.

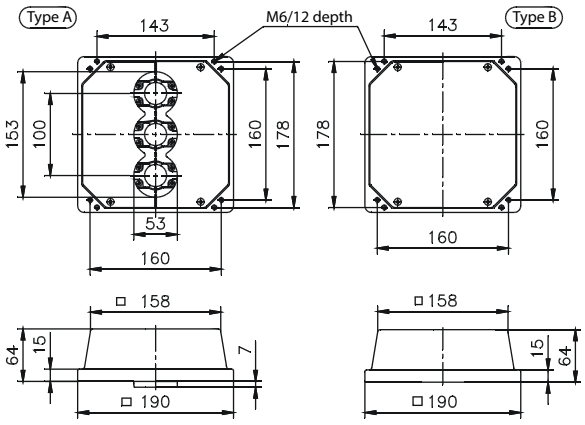

Moterm I



+ Mobile stand system for control components
+ Optional fixed or manual adjustable versions
+ Version with 2 or 4 roller system

Technische Daten

Material:	
Foot: sheet steel	
Profile: DIN EN 573 EN AW-AlMgSi	
Painting:	
Powder coating	
Colour:	
Profile: RAL 7035, light grey	
Foot: RAL 7021, black grey	
Max. static load:	
35 kg (Moterm 1 and 2)	
80 kg (Moterm 4 and 5)	

Included in delivery

Moterm with mounted inclination adjuster and adapter plate for commander systems (please order adapter plate separately)

Moterm I

Product range

Order No.	Type	Height	Description	Weight
50.01 01 01	Moterm 1	1000 mm	fixed version, 2 rollers	21,5
50.01 01 02	Moterm 2	750 mm to 1000 mm	manually adjustable, 2 rollers	23
50.01 01 04	Moterm 4	980 mm	fixed version, 4 rollers	25
50.01 01 05	Moterm 5	730 mm to 1000 mm	manually adjustable, 4 rollers	26,5

Zubehör

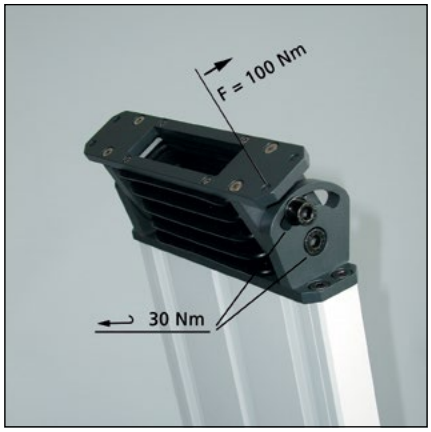

Universal adapter plate on moterm

Adapter plate
for connection to the control enclosure

Order No.	Type
50.01 02 03	Adapter plate SL 2000 profile 1
50.01 02 04	Adapter plate SL 2000 profile 2
50.01 02 05	Adapter plate SL 2000 profile 3
50.01 02 06	Adapter plate SL 3000 profile 1
50.01 02 07	Adapter plate SL 3000 profile 2 to 4
50.01 02 08	Adapter plate SL 3000 console version
50.01 02 09	Adapter plate universal (see drawing)
50.01 02 11	Adapter plate ComTronic
50.01 02 12	Adapter plate SL 3000 profile 4 (direct mounting)
50.01 02 14	Adapter plate SL 4000 profile 1 - 3
50.01 02 15	Adapter plate SL 4000 console version

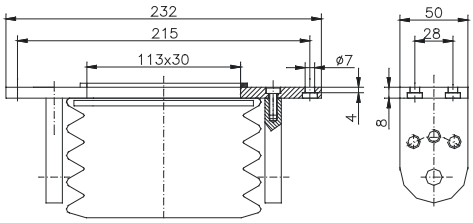

Load specification Moterm 4 and 5

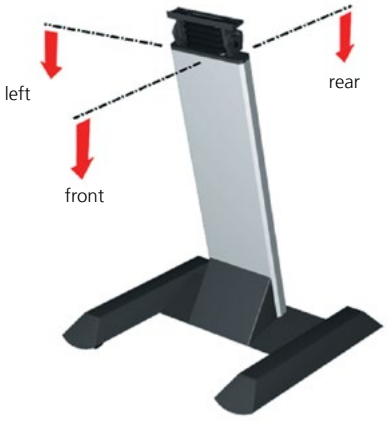

Max. static load capacity: 80 kg

The following table gives details for one-sided or uneven loading of Moterm 4 and 5.
Stability on an even surface is guaranteed if these values are maintained.

Load case

front		rear		left/right	
Load	Working range	Load	Working range	Load	Working range
48 kg	350 mm	80 kg	400 mm	56 kg	430 mm
43 kg	390 mm	61 kg	450 mm	35 kg	530 mm
33 kg	430 mm	45 kg	500 mm	17,8 kg	730 mm
28 kg	450 mm				

The data relates to a structure height of 960 mm and 0° inclination adjustment.



Moterm 1
Fixed version

Order No. **50.01 01 01**

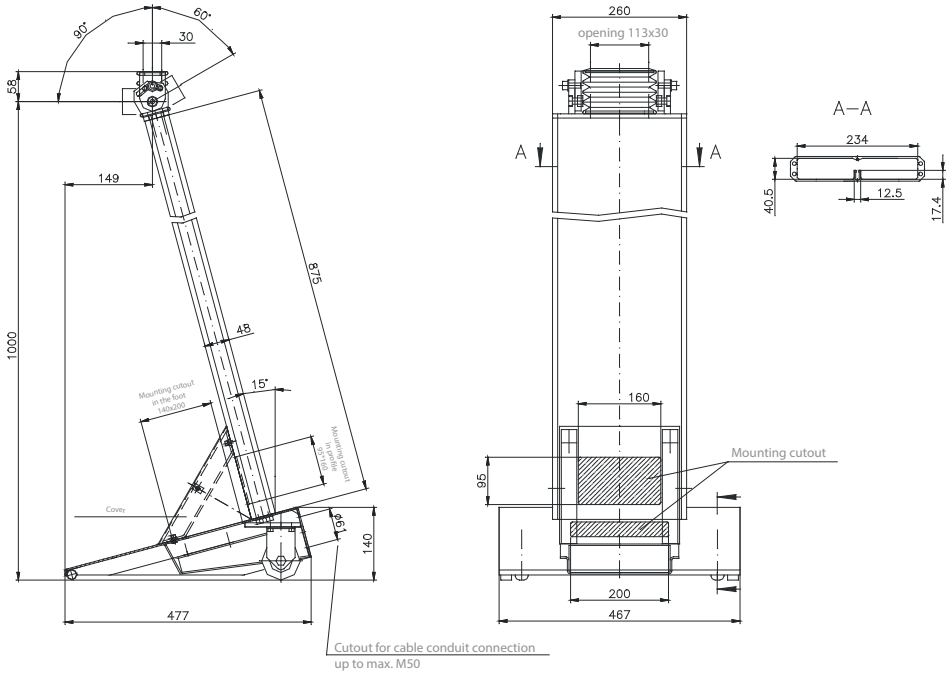



Moterm 2
Manually adjustable

Order No. **50.01 01 02**

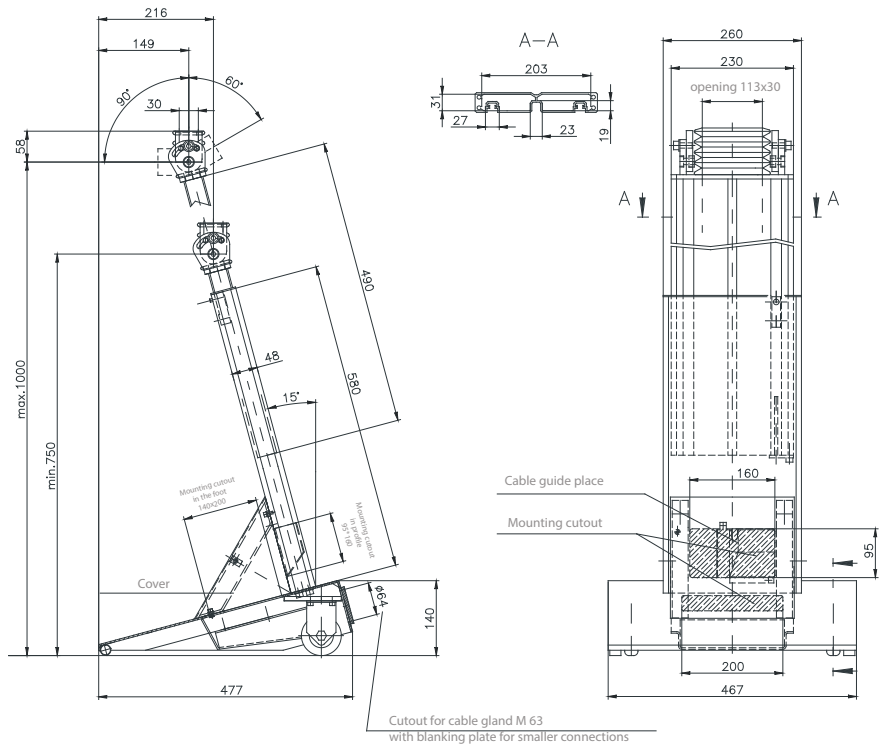

Moterm I



Moterm 4
Fixed version

Order No. **50.01 01 04**

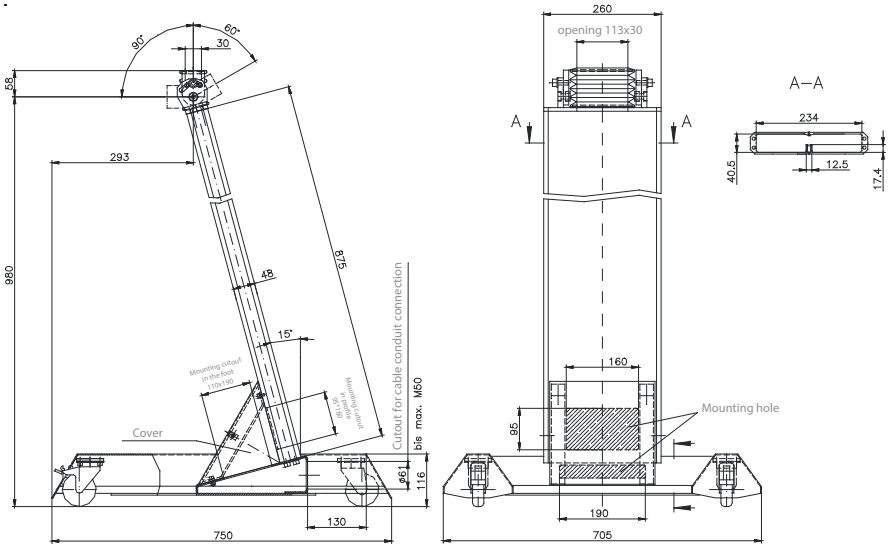



Moterm 5
Manually adjustable

Order No. **50.01 01 05**

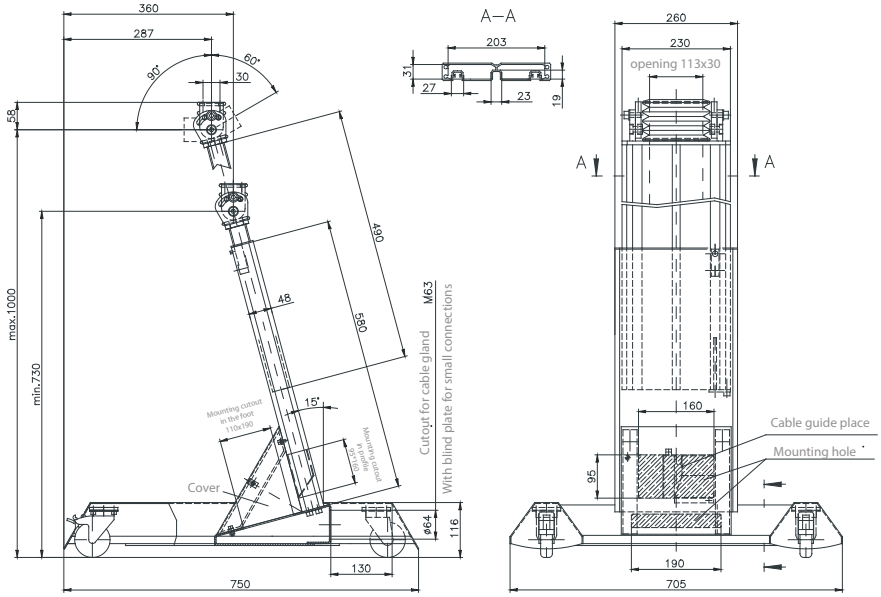

Moterm II





+ Mobile stand system for control components
+ Fixed or height-adjustable version with pneumatic spring
+ Version with 4 rollers or with foot stand
+ Optionally foot stand for anchoring

Included in delivery
Moterm with integrated tilt adjustment for adapter plate for control systems
(Please order adapter plate separately)

Technical data

Material	Base and stand profile: Aluminium profile system; DIN EN 573 EN AW-AlMgSi
Colour	Stand profile: plain anodized, optional powder-coated Base: RAL 9005, jet black
Maximum static load	80 kg

Moterm II

Product range

Moterm x11



Version with levelling feet to adjust for floor irregularities – as a stand system
Version with fixed height (1061 mm), other height or base dimensions on request

Order No.	Type	Height	Execution	Load
50.01 03 11	Moterm 311	1061 mm	fixed height, with foot stand	8 - 80 kg
50.01 09 11	Moterm 911	customized	fixed height, with foot stand	customized

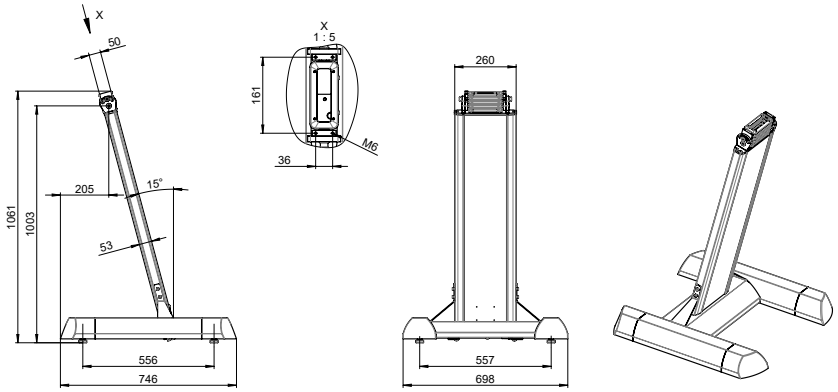

Moterm x12



Version with levelling feet to adjust for floor irregularities – as a stand system
Version with pneumatic spring and release mechanism
Height can be adjusted from 873 mm to 1115 mm
for load ranges from 8 to 50 kg; other load values on request

Order No.	Type	Height	Execution	Load
50.01 03 12	Moterm 312	873 mm to 1115 mm	manually adjustable, with food stand	8 - 15 kg
50.01 04 12	Moterm 412	873 mm to 1115 mm	manually adjustable, with food stand	16 - 22 kg
50.01 05 12	Moterm 512	873 mm to 1115 mm	manually adjustable, with food stand	23 - 30 kg
50.01 06 12	Moterm 612	873 mm to 1115 mm	manually adjustable, with food stand	31 - 40 kg
50.01 07 12	Moterm 712	873 mm to 1115 mm	manually adjustable, with food stand	41 - 50 kg
50.01 09 12	Moterm 912	873 mm to 1115 mm	manually adjustable, with food stand	customized

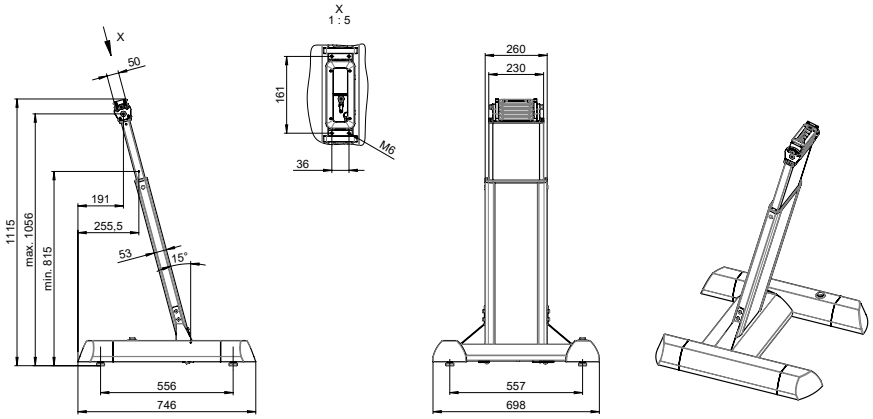

Technical details

Moterm x14



Version with 4 rollers, 2 movable and 2 locking rollers
Version with fixed height (1083 mm), other height or base dimensions on request

Order No.	Type	Height	Execution	Load
50.01 03 14	Moterm 314	1083 mm	fixed height, 4 rollers	8 - 80 kg
50.01 09 14	Moterm 914	variable Execution	fixed height, 4 rollers	customized

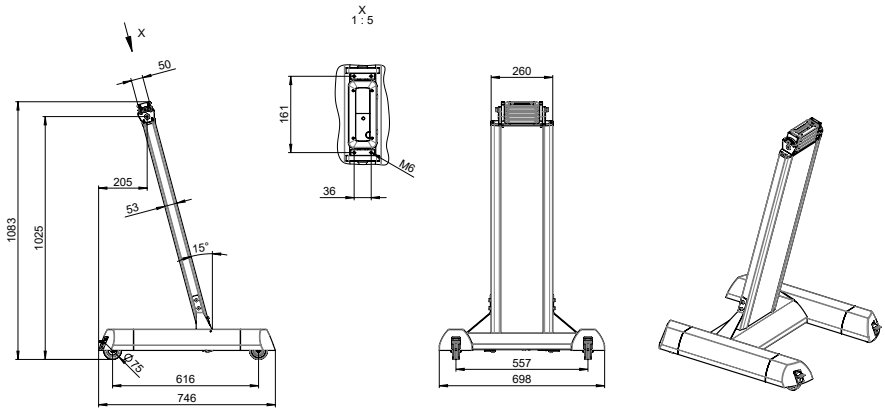

Moterm x15



Version with 4 rollers, 2 movable and 2 locking rollers,
with pneumatic spring and release mechanism
Height can be adjusted from 898 mm to 1140 mm for load ranges from 8 to 50 kg; other load values on request

Order No.	Type	Height	Execution	Load
50.01 03 15	Moterm 315	898 mm to 1140 mm	manually adjustable, 4 rollers	8 - 15 kg
50.01 04 15	Moterm 415	898 mm to 1140 mm	manually adjustable, 4 rollers	16 - 22 kg
50.01 05 15	Moterm 515	898 mm to 1140 mm	manually adjustable, 4 rollers	23 - 30 kg
50.01 06 15	Moterm 615	898 mm to 1140 mm	manually adjustable, 4 rollers	31 - 40 kg
50.01 07 15	Moterm 715	898 mm to 1140 mm	manually adjustable, 4 rollers	41 - 50 kg
50.01 09 15	Moterm 915	898 mm to 1140 mm	manually adjustable, 4 rollers	customized

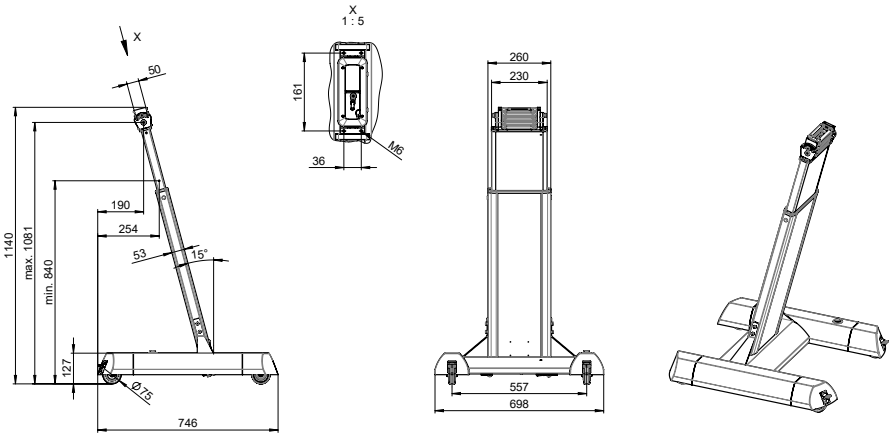

Moterm II

Accessories

Adapter plate for connecting to the control enclosure



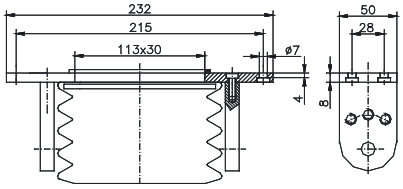

Order No.	Type
50.01 02 03	Adapter plate SL 2000 Profile 1
50.01 02 04	Adapter plate SL 2000 Profile 2
50.01 02 05	Adapter plate SL 2000 Profile 3
50.01 02 06	Adapter plate SL 3000 Profile 1
50.01 02 07	Adapter plate SL 3000 Profile 2 to 4
50.01 02 08	Adapter plate SL 3000 console version
50.01 02 09	Adapter plate universal (s. drawing)
50.01 02 11	Adapter plate ComTronic
50.01 02 12	Adapter plate SL 3000 Profile 4 (direct installation)
50.01 02 14	Adapter plate SL 4000 Profile 1 - 3
50.01 02 15	Adapter plate SL 4000 console version

Feet for anchoring



Order No.	Execution
50.00 01 01	Set = 2 pcs

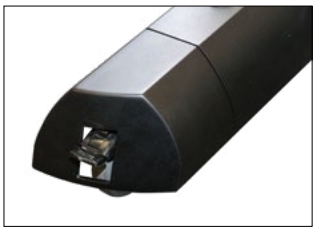

Locking system for version with rollers



Simple adjustment option for height adjustment

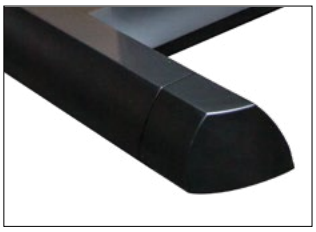

Floor attachment with levelling unit (optionally für anchoring)

Inclining adapter

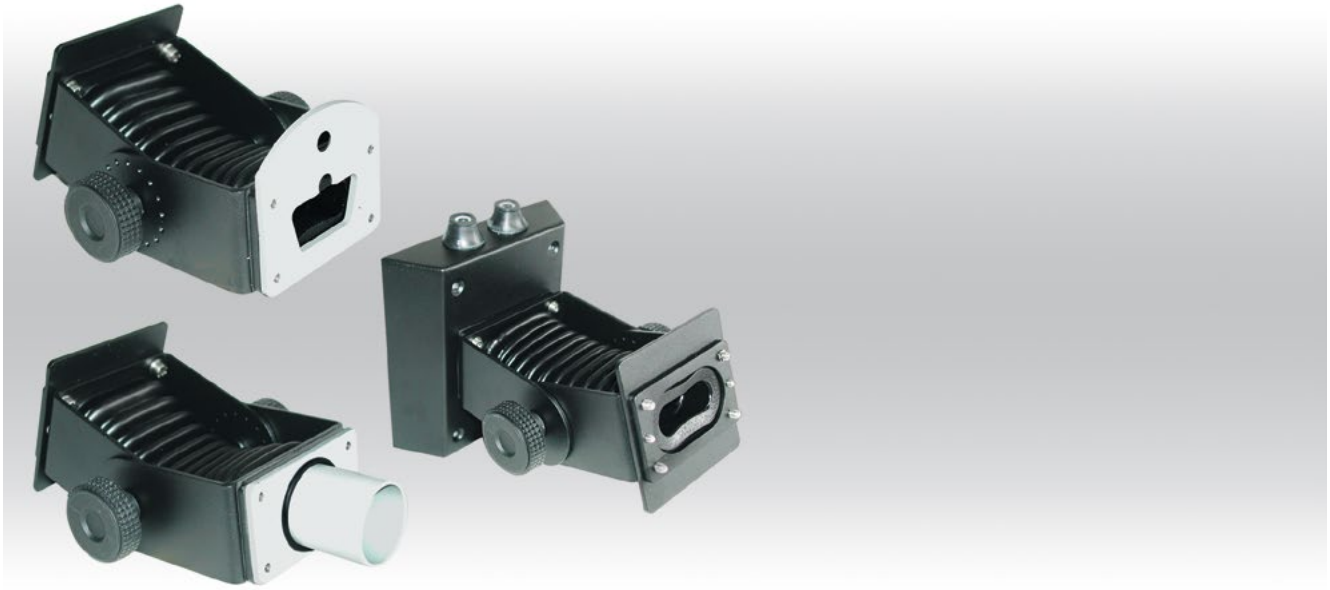

+ Inclining adapter for individual connections between enclosure and ROSE suspension systems or for wall mounting
+ Simply handling by open design
+ Stepped adjuster allows inclination to suit your application

Included in delivery
Inclining adapter, pre-assembled flange plates, sealings and mounting material

Technical data

Material	Sheet steel 2,5 mm Bellow: PVC
Colour	Powder coating, RAL 9005, jet black Bellow: RAL 9005, jet black
Ingress protection	IP 54

Inclining adapter

Product range

for Limanda and other small enclosures	Order No.	Weight (g)
Inclining adapter for mounting onto walls or machine	**50.02 00 01**	1286
Inclining adapter for suspension system GT 48/2 (tube)	**50.02 00 02**	986
Inclining adapter for suspension system GTK electronic	**50.02 00 03**	1004
Inclining adapter for suspension system GT 48/2 or GTK electronic	**50.02 00 04**	900
Inclining adjustment	**50.02 01 01**	1050
Inclining adapter stainless steel	**50.02 10 01**	1286

Technical details

Inclining adapter



Order No.	Execution
50.02 00 01	for mounting onto wall or machine Sheet steel parts for inclined mounting of a Limanda or other enclosure. Two cable exits optionally top or bottom with rubber nozzles. Dust and damp protection by bellow (black). Enclosure rating IP 54 up to fastening flange. Swivelling range 180° in 22.5° steps, adjusted with knurled screw.

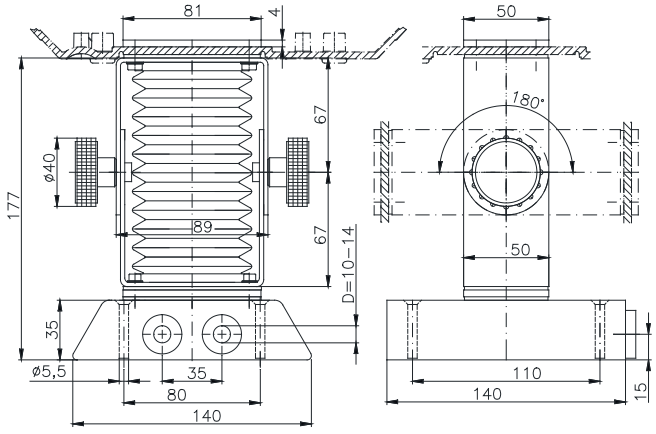

Technical details

Inclining adapter for GT 48/2 (tube)



Order No.	Execution
50.02 00 02	Sheet steel parts for inclined mounting of a Limanda or other enclosure. Mounted directly onto the circular tube of the GT 48/2 rack system. Fastened to the tube via olive rings (the thread in the circular tube is attached afterwards). Enclosure rating IP 54 once assembled. Dust and damp protection by bellow (black). Swivelling range 180° in 22.5° steps, adjusted with knurled screw.

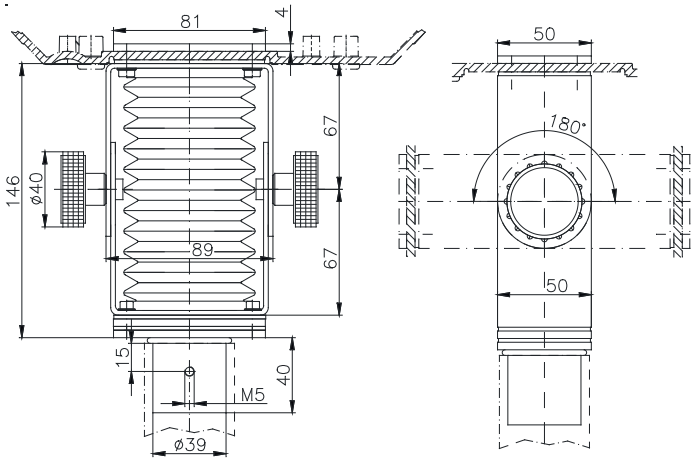

Inclining adapter for GTK electronic



Order No.	Execution
50.02 00 03	Sheet steel parts for inclined mounting of a Limanda or other enclosure. Mounted directly onto the connecting tube of the GTK electronic rack system. Flange mounted onto tube with self-tapping screws. Enclosure rating IP 54 once assembled. Dust and damp protection by bellow (black). Swivelling range 180° in 22.5° steps, adjusted with knurled screw.

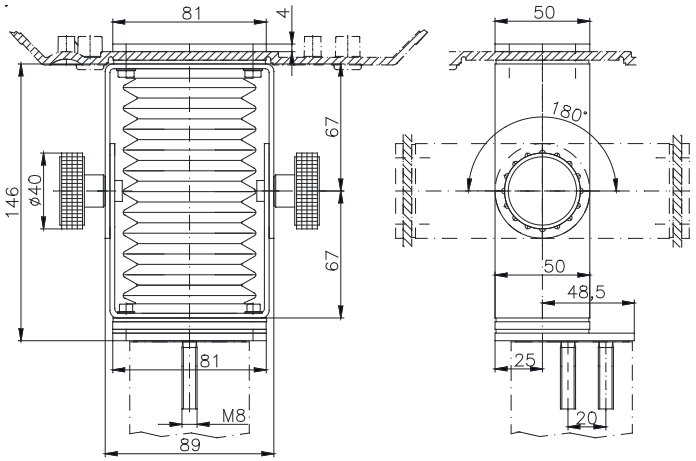

Inclining adapter

Technical details

Inclining adapter for GT 48/2 or GTK electronic



Order No.	Execution
50.02 00 04	Sheet steel parts for inclined mounting of a Limanda or other enclosure. Attached to the GT 48/2 or GTK electronic rack system flange coupling with flange plate. Enclosure rating IP 54 once assembled. Dust and damp protection by bellow (black). Swivelling range 180° in 22.5° steps, adjusted with knurled screw.

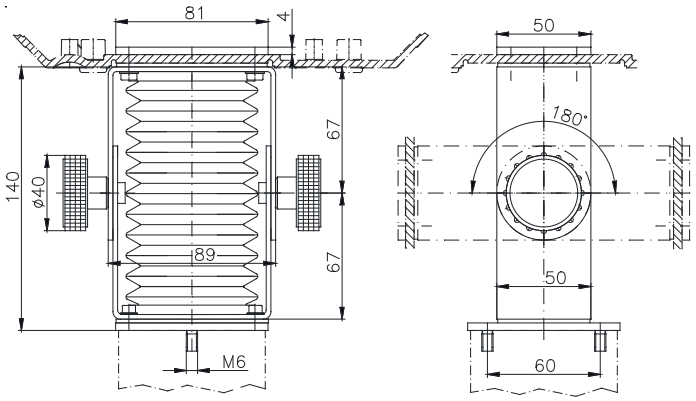

Inclining adapter stainless steel



Order No.	Execution
50.02 10 01	parts for inclined mounting of a Limanda or other enclosure. Attached to the GT 48/2 or GTK electronic rack system flange coupling with flange plate. Enclosure rating IP 54 once assembled. Dust and damp protection by bellow (black). Swivelling range 180° in 22.5° steps, adjusted with knurled screw.

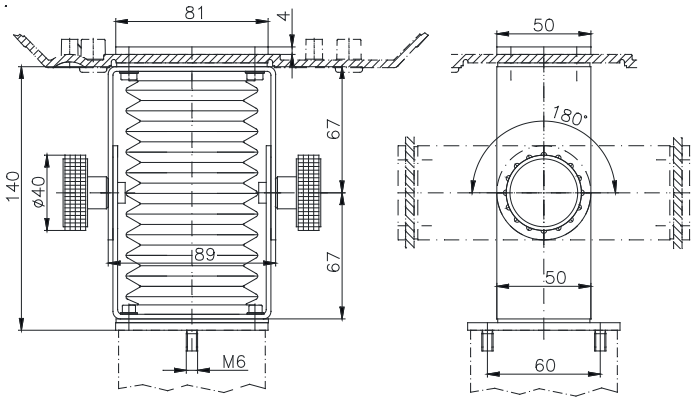

Inclining adjustment



Order No.	Execution
50.02 01 01	Continuously variable inclining system (+/- 75°) for Commander systems. System consisting in aluminium elements with bellow. Scope of supply: base unit without adaptation plate

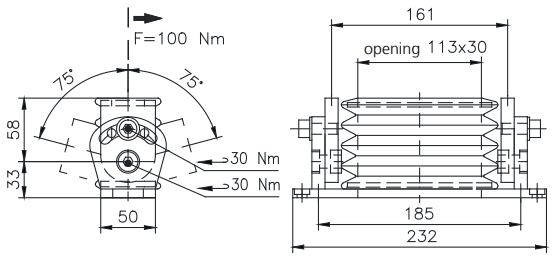

Limanda



+ Polyamide hand held enclosures for data acquisition, MCR and automation engineering
+ For installations and command devices mobile and stationary applicable
+ Variable mounting depths

Included in delivery
Clam sheel enclosure with top and base, each with fixing domes incl. seals and border profile, 3 cover flaps for interface garages, screws and fixing materials for front panel mounting.

Technical data

Material	Enclosure: Polyamide Border profile: NBR, black
Colour	RAL 7021, black grey
Ingress protection	IP 65 to EN 60529
Flammability	UL 94 V-2
Surface resistance	10^{12} Ohm, IEC 60093
Temperature range	-20° C to +60° C

Limanda

Product range

Order No.	Type	Dimensions (mm) H x W x D	Weight (g)
27.03 03 00	Limanda I	311 x 281 x 72	1200
27.03 03 01	Limanda I EMC	311 x 281 x 72	1200
27.03 03 17	Limanda I for OP17	311 x 281 x 97	1500
27.03 02 00	Limanda II	270 x 248 x 64	800
27.03 02 01	Limanda II EMC	270 x 248 x 64	800



Limanda enclosure system for installation of different hand held operator panels.



Limanda I for OP17 -
Supplied ready for installation of the Siemens OP17 operator panel without additional fitting material.



Limanda II
with fitted command unit

Accessories

Quiver



Order No.	Execution
27.03 00 89	for Limanda II
27.03 00 91	for Limanda II with intermediate frame
27.03 00 86	for Limanda I
27.03 00 90	for Limanda I with intermediate frame

Front plate



Order No.	Execution
27.03 02 90	for Limanda II EMC
27.03 03 90	for Limanda I EMC
27.03 02 80	for Limanda II
27.03 03 80	for Limanda I

Handle set



Order No.	Execution
27.03 00 83	for Limanda I without push button
27.03 00 71	for Limanda I with 3-step enabling switch, right-hand version
27.03 00 72	for Limanda I with 3-step enabling switch, left-hand version

Accessories

Mounting set

Order No.	Execution
27.03 02 82	for Siemens TP 170/ TP070

Inclining adapter for holder



Order No.	Execution	Weight (g)
50.02 00 05	Mounting directly onto tube GT 48/2	776
50.02 00 06	Mounting directly onto profile GTK electronic	804
50.02 00 07	Mounting directly on wall or maschine	490

Carrying strap



Carrying strap in 2 Executions: Standard execution and comfort execution: strengthened execution with shoulder pad

Order No.	Execution
27.03 00 85	for Limanda
27.03 00 92	for Limanda, Comfort

Intermediate frame

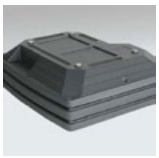

Order No.	Execution
27.03 02 88	for Limanda II EMC
27.03 00 88	for Limanda I EMC
27.03 02 81	for Limanda II
27.03 03 81	for Limanda I

Holder

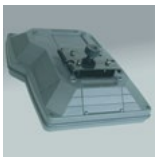

Order No.	Execution
27.03 00 84	Enables rapid removal of the Limanda from the inclining adapter (for Limanda I and II). There is a gap of 19.5 mm between the Limanda and the holder for assembly purposes.

Cable connection with bending protection



Order No.	Execution
08.10 01 16	M6
08.10 01 20	M20
08.10 01 25	M25

Further accessories see chapter „Electro-mechanical components“

Limanda

Technical details



Limanda I

Order No. **27.03 03 00**

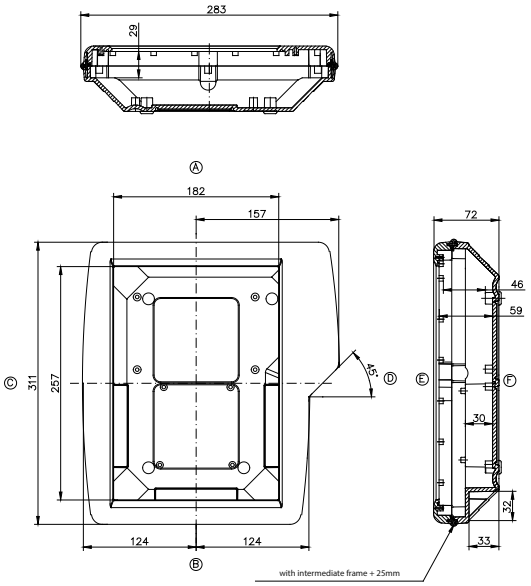

Limanda II

Order No. **27.03 02 00**

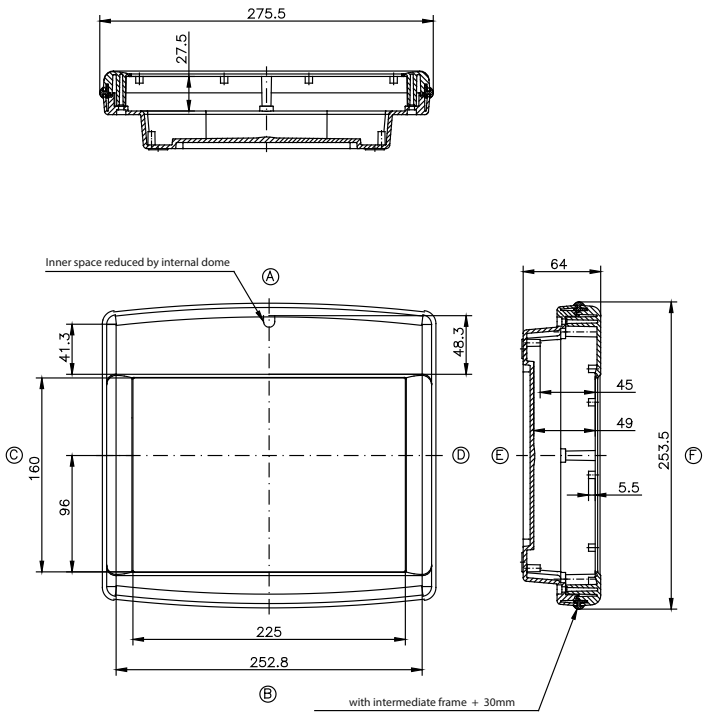

Taguan 130

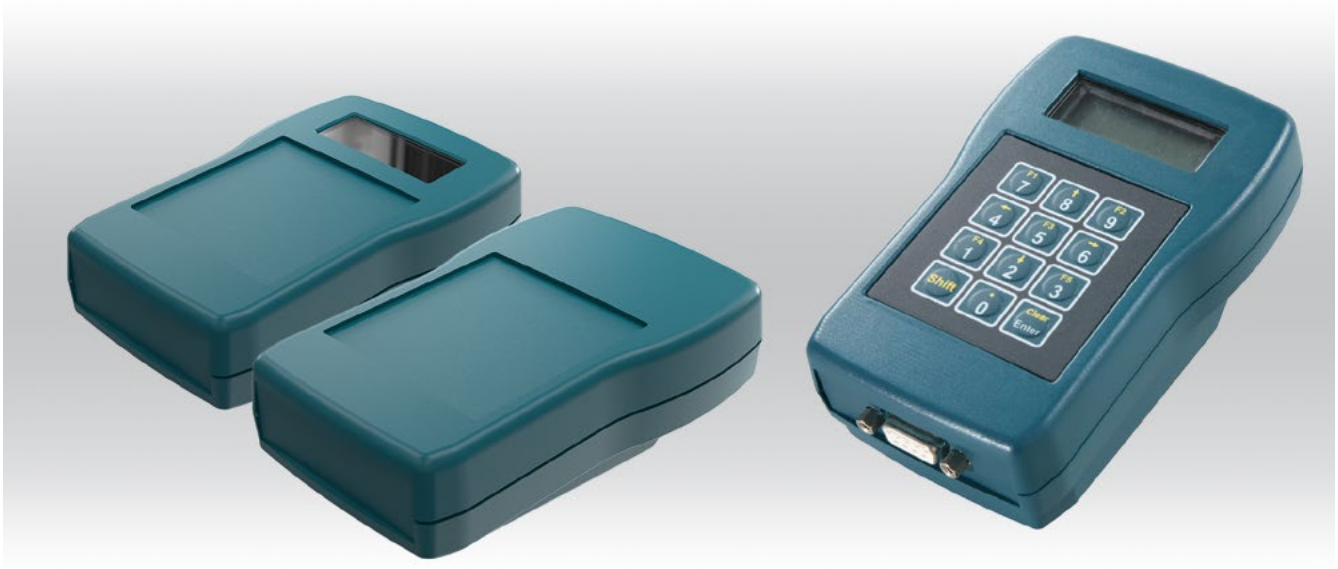

+ ABS hand held enclosure for data acquisition and measurement
+ With integrated battery compartment
+ Execution with or without display opening
+ Optional EMC Execution with internal coating

Included in delivery
5-part enclosure with top and base, battery compartment, battery compartment cover, head and shaft cover, fixing and enclosure screws. Open Execution incl. display screen and punched seal.

Technical data

Material	ABS
Ingress protection	IP 40 to EN 60529
Surface resistance	$4x10^{14}$ Ohm, IEC 60093
Flammability	UL 94 HB
Colour	top and base, battery compartment cover, head/shaft panel: RAL 5020, ocean blue keyboard cover, battery compartment: RAL 7024, graphite grey
Temperature range	-40 °C to +80 °C

Taguan 130

Product range

Type	Order No.	Execution	Dimensions H x W x D (mm)	Weight (g)
Taguan 130 FO	**27.01 02 00**	flat, open	80/70 x 125 x 36,7 / 28,5	130
Taguan 130 FG	**27.01 02 01**	flat, closed	80/70 x 125 x 36,7 / 28,5	110
Taguan 130 TO	**27.01 02 10**	deep, open	80/70 x 125 x 46,7 / 28,5	123
Taguan 130 TG	**27.01 02 11**	deep, closed	80/70 x 125 x 46,7 / 28,5	140

Components mounting options

Component options	Type T130 FO	Type T130 FG	Type T130 TO	Type T130 TG
Display max. view area 45 x 17,4 mm max. mounting dimensions 65 x 29 mm	•		•	
Chipcard reader in head section	•	•	•	•
Scanner	•	•	•	•
PCMCIA slot	•	•	•	•
D-Sub interface 9-pin	•	•	•	•
D-Sub interface 15-pin	•	•	•	•
9 V monobloc	•	•	•	•
4 R3 micro-cells (AAA)	•	•	•	•
1. PCB (main board)	•	•	•	•
2. PCB (adapter board)			•	•
Membrane keypad	•	•	•	•

Accessories

Battery holder



Order No.	Execution
27.01 02 80	for 4 micro-cells (AAA)
27.01 02 81	for 9 V monobloc

Shaft cover



Order No.	Execution
27.01 02 85	Shaft cover in enclosure colour
27.01 02 86	Shaft cover transparent
27.01 02 87	Shaft cover for infrared

Clip

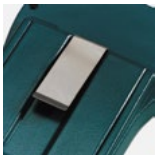

Order No.
27.01 02 82

Spare screw set

Order No.	
27.01 00 90	Taguan

Spare display screen set

Order No.	
27.01 02 88	Taguan 130

Keypad

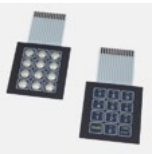

Order No.	Execution
82.10 00 01	FT 130b, 12 keys, printed, common connection
82.10 00 02	FT 130e, 12 keys, with insert, matrix

Connector

Order No.	Execution
82.20 00 13	13-pole

Further accessories see chapter „Electro-mechanical components“

Taguan 130

Technical details



Type	Execution	Order No.
Taguan 130 FO	flat, open	**27.01 02 00**

(max. PCB size of displays ca. 65 x 29 mm)

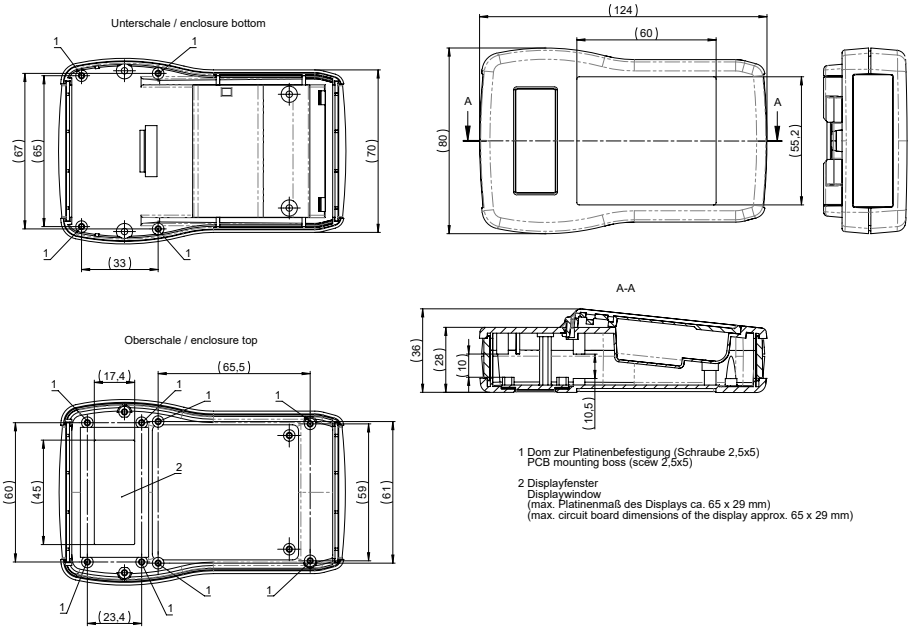

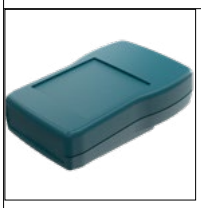

Type	Execution	Order No.
Taguan 130 FG	flat, closed	**27.01 02 01**

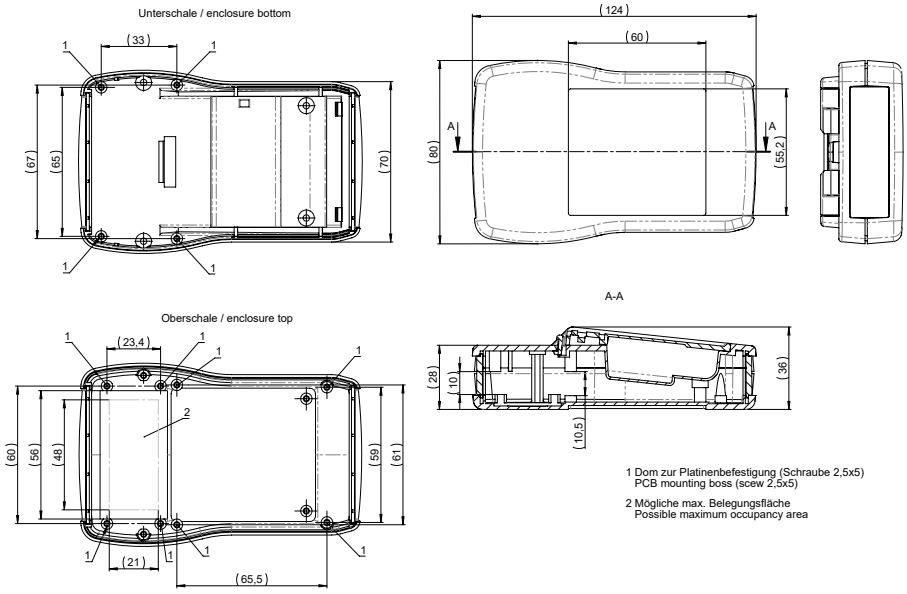

Accessories



Type	Execution	Order No.
Taguan 130 TO	deep, open	**27.01 02 10**

(max. PCB size of displays ca. 65 x 29 mm)

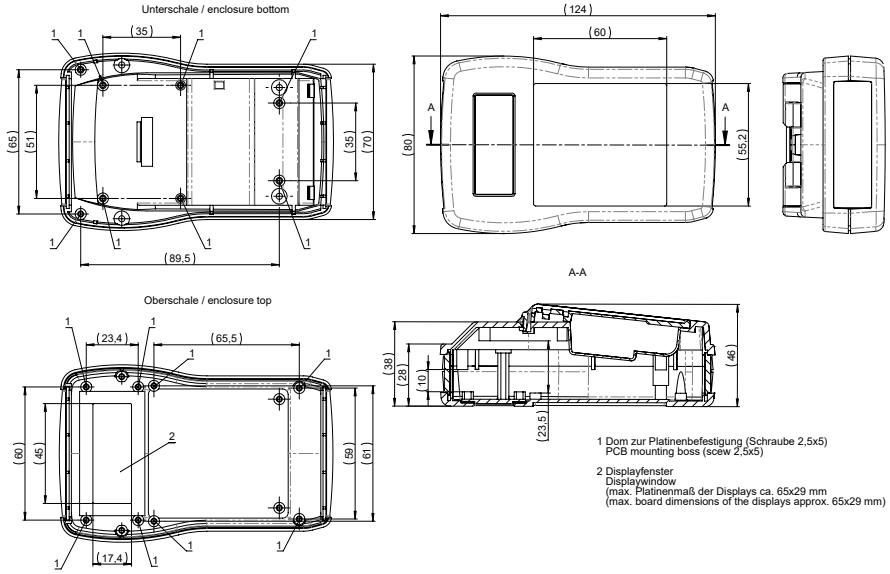

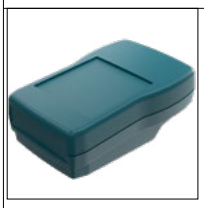

Type	Execution	Order No.
Taguan 130 TG	deep, closed	**27.01 02 11**

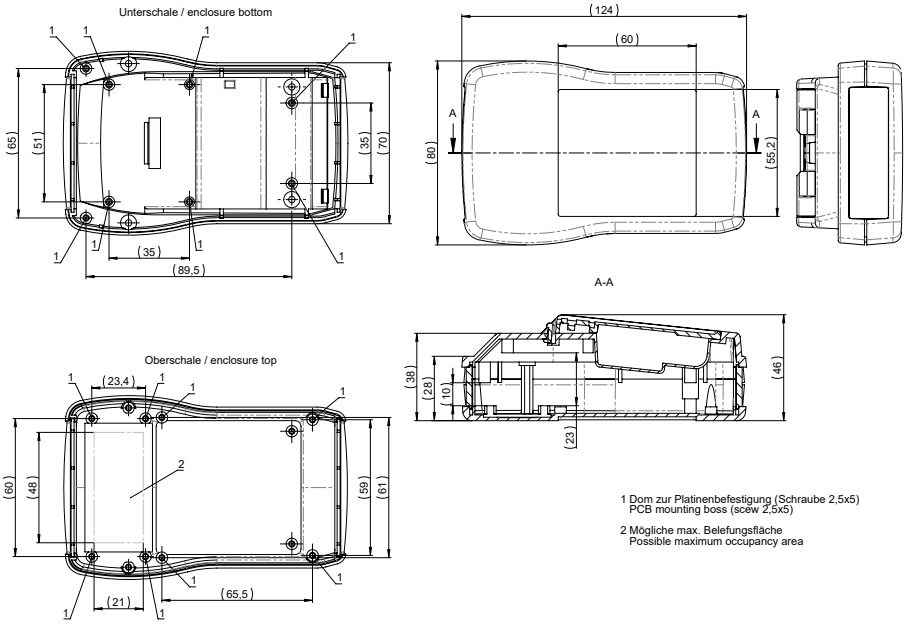

Taguan 180/230

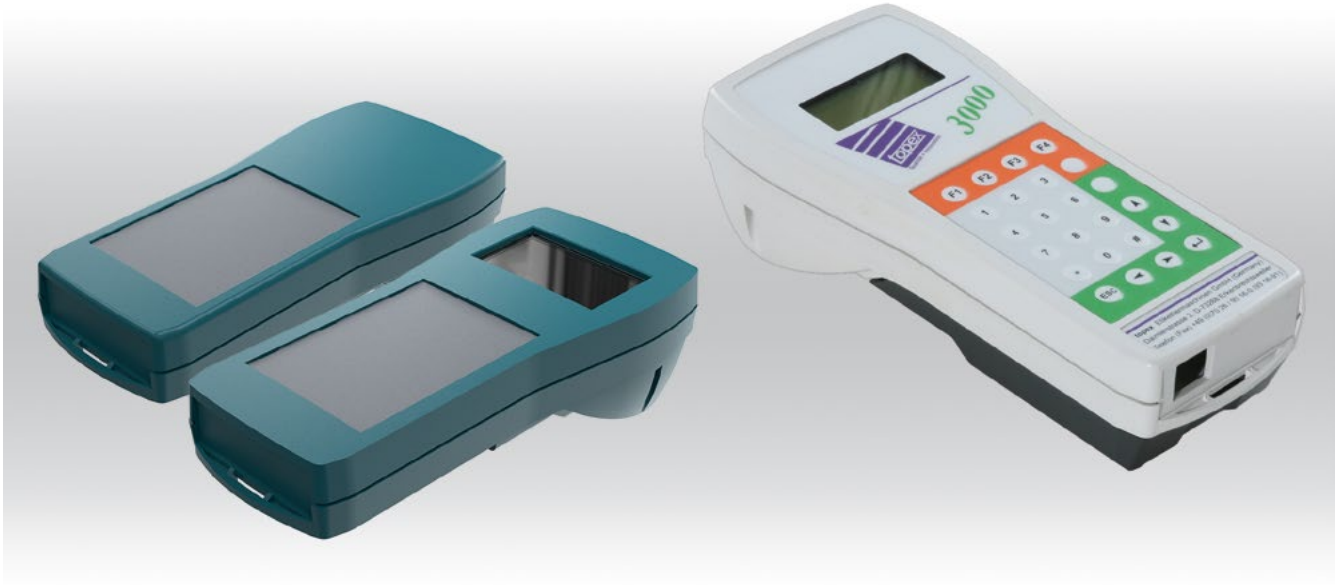

+ ABS hand held enclosure for data acquisition and measurement
+ With integrated battery compartment
+ Execution with or without display openings
+ Optional EMC Execution with internal coating

Included in delivery
Enclosure with top and base, keypad cover, head and shaft cover, fastening and enclosure screws. Open Execution incl. display screen and punched seal.
Please order battery compartment separately.

Technical data

Material	ABS
Ingress protection	IP 40 to EN 60529
Surface resistance	$4x10^{14}$ Ohm, IEC 60093
Flammability	UL 94 HB
Colour	top and base, battery compartment cover, head/shaft cover: RAL 5020, ocean blue keyboard cover, battery compartment: RAL 7024, graphite grey
Temperature range	-40 °C to +80 °C

Product range

Type	Order No.	Execution	Dimensions H x W x D (mm)	Weight (g)
Taguan 180 O	**27.01 04 00**	open	84/70 x 180 x 53,5/38,5	140
Taguan 180 G	**27.01 04 01**	closed	84/70 x 180 x 53,5/38,5	170
Taguan 230 O	**27.01 06 00**	open	97/70 x 229 x 53,5/38,5	230
Taguan 230 G	**27.01 06 01**	closed	97/70 x 229 x 53,5/38,5	400

Components mounting options

Component options	Type T180 O	Type T180 G	Type T230 O	Type T230 G
Display (max. view area 56 x 33 mm; max. mounting dimensions 66 x 46 mm)	•			
Display (max. view area 66 x 43 mm; max. mounting dimensions 78 x 56 mm)			•	
Chipcard reader in head section	•	•	•	•
Chipcard reader in shaft section	•	•	•	•
Magnetic card reader	•	•	•	•
Scanner	•	•	•	•
PCMCIA slot	•	•	•	•
D-Sub interface 9-pin	•	•	•	•
D-Sub interface 15-pin	•	•	•	•
D-Sub interface 25-pin	•	•	•	•
4 micro-cells R6 (AA)	•	•	•	•
9 V monobloc	•	•	•	•
1st board (main board)	•	•	•	•
2nd board (adapter board)	•	•	•	•
Membrane keypad	•	•	•	•
Switching mat, 12 keys, in combination with keypad plate	•	•	•	•
Switching mat, 24 keys	•	•		
Switching mat, 36 keys			•	•

Taguan 180/230

Accessories

Battery holder



Order No.
27.01 00 94

Battery compartment empty



Order No.	Execution
27.01 00 80	for 4 micro-cells (AA)

Blende





Order No.	Execution
27.01 02 85	Shaft cover, in enclosure colour
27.01 02 86	Shaft cover, transparent
27.01 02 87	Shaft cover for infrared
27.01 00 85	Head cover, stepped in enclosure colour
27.01 00 87	Head cover, stepped for infrared
27.01 00 89	Head cover, stepped transparent
27.01 00 91	Head cover, straight in enclosure colour
27.01 00 92	Head cover, straight transparent
27.01 00 93	Head cover, straight for infrared

Display fixing set



Order No.	Execution
27.01 04 80	Taguan 180
27.01 06 80	Taguan 230
27.01 06 88	Taguan 230

L'IMPULSION | Retrouvez nous sur www.limpulsion.fr

Accessories

Spare display screen

Order No.	Execution
27.01 04 88	for Taguan 180
27.01 06 88	for Taguan 230

Spare screws set

Order No.
27.01 00 90

Spring contact



Contacts for the battery pack (Company Bourns, type 70ADJ002ML1), for mounting in enclosure bottom part

Order No.	Execution
27.01 00 82	2-pole

Wrist strap



Protection against falling down, or as carrying aid

Order No.
27.01 00 83

Hand strap



with Velcro fastener for adjustment, consisting of holding strap, adapter and screws

Order No.	Execution
27.01 04 84	for Taguan 180
27.01 06 84	for Taguan 230

Switch mat set



consisting of keypad plate, silicone switching mat and keypad circuit board with connecting cable

Order No.	Execution
27.01 00 95	12 keys, for Taguan 180 / 230
27.01 04 81	24 keys for Taguan 180
27.01 06 81	36 keys, for Taguan 230

Further accessories see chapter „Electro-mechanical components“

Taguan 180/230

Technical details

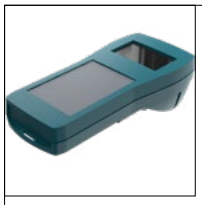

Type	Execution	Order No.
Taguan 180 O	open	**27.01 04 00**

(max. PCB size of displays ca. 66 x 46 mm)

Unterschale / enclosure bottom

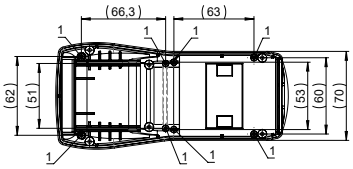

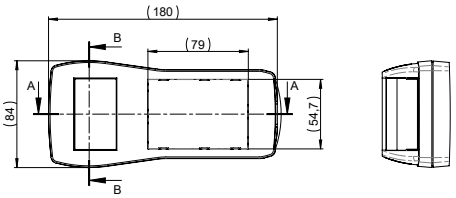

A-A

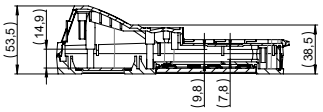

Oberschale / enclosure top

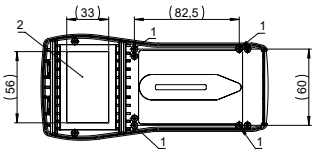

1 Dom zur Platinenbefestigung (Schraube 2,5x5)
PCB mounting boss (screw 2,5x5)

2 Displayfenster
Displaywindow
(max. Platinenmaß des Display ca. 66x46 mm)
(max. circuit board dimensions of the display approx. 66x46 mm)

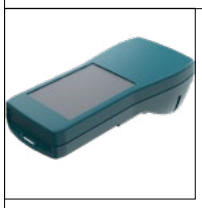

Type	Execution	Order No.
Taguan 180 G	closed	**27.01 04 01**

Unterschale / enclosure bottom

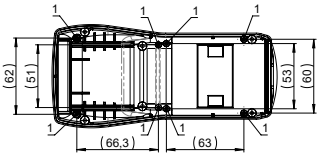

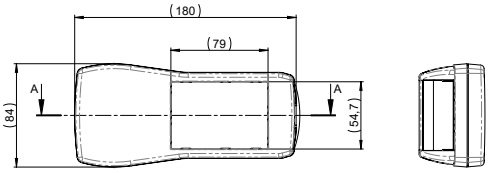

Oberschale / enclosure top

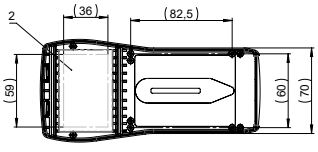

A-A

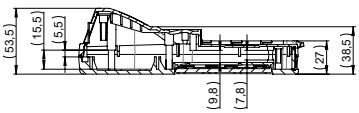

1 Dom zur Platinenbefestigung (Schraube 2,5x5)
PCB mounting boss (screw 2,5x5)

2 Mögliche max. Belegungsfläche
Possible maximum occupancy area

Accessories



Type	Execution	Order No.
Taguan 230 O	open	**27.01 06 00**

(max. PCB size of displays ca. 78 x 56 mm)

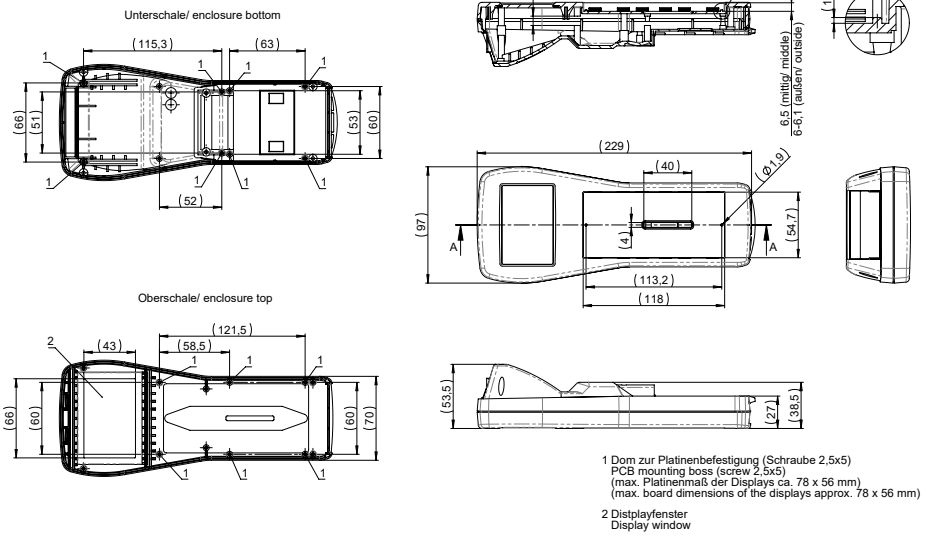

1 Dom zur Platinenbefestigung (Schraube 2,5x5)
PCB mounting boss (screw 2,5x5)
(max. Platinenmaß der Displays ca. 78 x 56 mm)
(max. board dimensions of the displays approx. 78 x 56 mm)

2 Distplayfenster
Display window

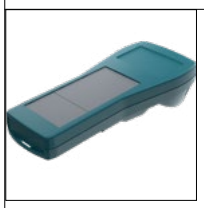

Type	Execution	Order No.
Taguan 230 G	closed	**27.01 06 01**

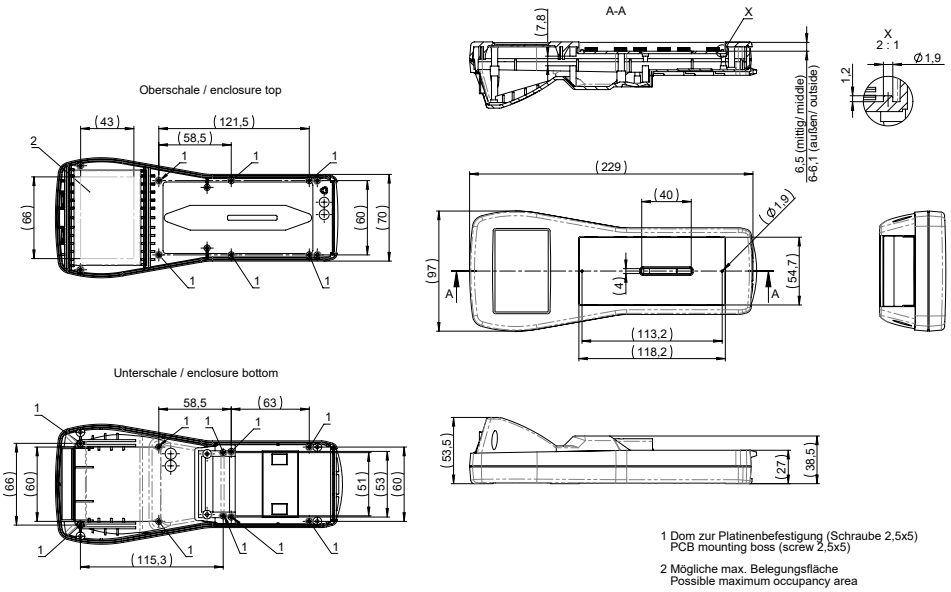

1 Dom zur Platinenbefestigung (Schraube 2,5x5)
PCB mounting boss (screw 2,5x5)

2 Mögliche max. Belegungsfläche
Possible maximum occupancy area

Beluga 180/220

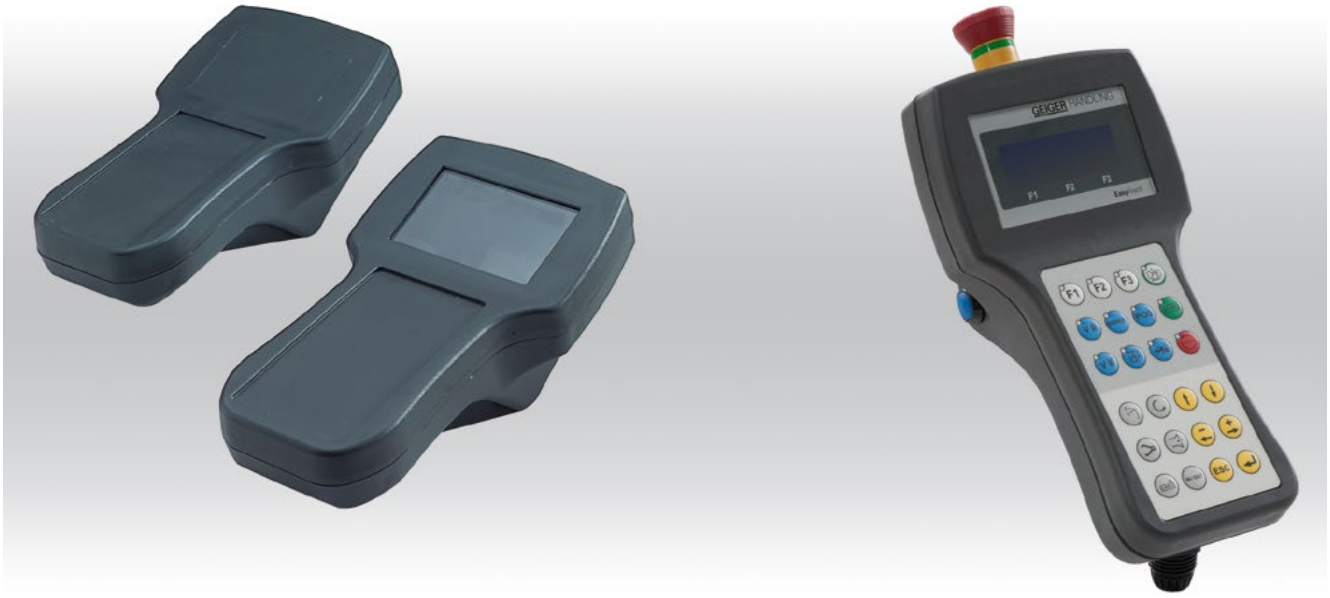

+ Polyamide hand held enclosure for MCR- and automation engineering
+ Execution with or without display opening
+ Prepared for acceptance of keypads/silicone switch mats
+ Optional EMC Execution with internal coating and EMC seal

Included in delivery
Double-leaf enclosure with top and base unit, each with fixing domes, fastening screws and enclosure screws.
Open Execution incl. display screen and punched seal.

Technical data

Material	Polyamide
Ingress protection	IP 65 to EN 60529
Surface resistance	$4x10^{14}$ Ohm, IEC 60093
Flammility	UL 94 V-2
Colour	RAL 7021, black grey
Temperature range	-40 °C to +60 °C

Product range

Type	Order No.	Execution	Dimensions H x W x D (mm)	Weight (g)
Beluga 180 O	**27.02 02 00**	open	106/75 x 187 x 50	190
Beluga 180 G	**27.02 02 01**	closed	106/75 x 187 x 50	228
Beluga 220 O	**27.02 04 00**	open	116/85 x 220 x 51	247
Beluga 220 G	**27.02 04 01**	closed	116/85 x 220 x 51	247

Components mounting options

Component options	Type B180 O	Type B180 G	Type B220 O	Type B220 G
Display max. view area 42 x 65 mm max. mounting dimensions 56,4 x 74 mm or 54 x 80 mm	•			
Display max. view area 49 x 78 mm max. mounting dimensions 71,5 x 84 mm or 70,5 x 86 mm			•	
Emergency stop button	•	•	•	•
Push button	•	•	•	•
Hand wheel		•		•
Step switch		•		•
Joy stick	•		•	
Cable outlet up to M 16	•	•	•	•
Cable outlet up to M 20			•	•
1st board (main board)	•	•	•	•
Other boards	•	•	•	•

Accessories

Battery compartment empty



Order No.
27.02 00 85

Battery holder

Order No.	Execution
27.02 00 86	for 4 round cells for battery compartment (AA)
27.02 00 87	for 9 V monobloc for battery compartment

Display fixing set



Order No.	Execution
27.01 06 80	Beluga 180
27.02 04 82	Beluga 220

Beluga 180/220

Accessories

Spare display screen

Order No.	Execution
27.01 06 88	Beluga 180
27.02 04 83	Beluga 220

Spare screw set

Order No.	
27.02 00 82	Beluga 180/220

Keypads



Order No.	Execution
82.10 00 03	Keypad FT 180b, 15 keys, printed (Matrix)
82.10 00 04	Keypad FT 180e, 15 keys, with insert (Matrix)
82.10 00 05	Keypad FT 220b, 18 keys, printed
82.10 00 06	Keypad FT 220e, 18 keys, with insert (Matrix)

Hook set



Order No.	Execution
27.02 00 80	without magnet
27.02 00 81	with magnet

Hand strap

Order No.	
27.02 00 83	for Beluga 180/220

Cable connection with bending protection



Order No.	Execution
08.10 01 16	M16x1.5
08.10 01 20	M20x1.5

Wall holder set

Order No.	Execution
27.02 00 84	for hook set

Further accessories see chapter „Electro-mechanical components“

Technical details



Type	Execution	Order No.
Beluga 180 O	open	**27.02 02 00**
Beluga 180 G	closed	**27.02 02 01**

(max. PCB size of displays ca. 74 x 56,4 mm or 80 x 54 mm)

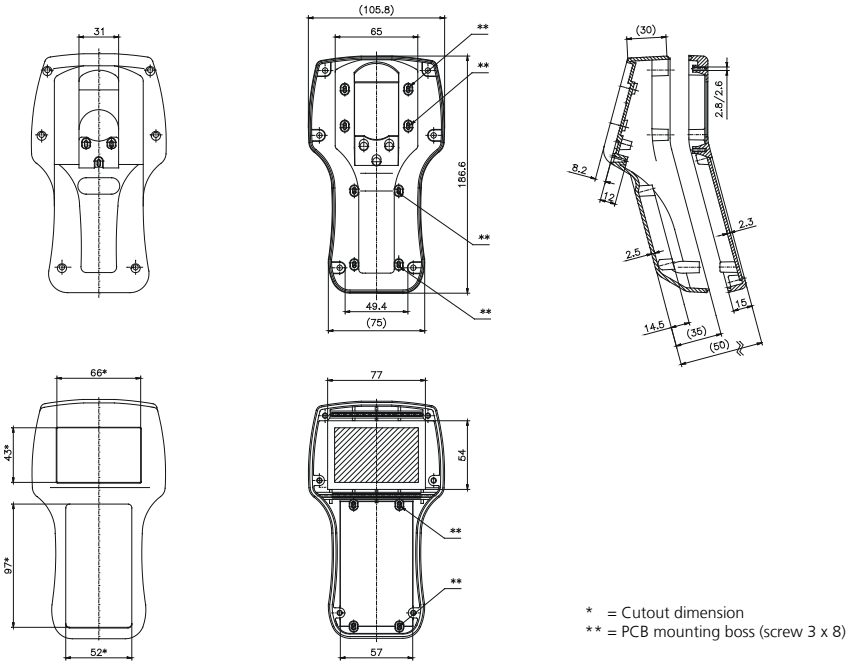

* = Cutout dimension
** = PCB mounting boss (screw 3 x 8)



Type	Execution	Order No.
Beluga 220 O	open	**27.02 04 00**
Beluga 220 G	closed	**27.02 04 01**

(max. PCB size of displays ca. 84 x 71,5 mm or 86 x 70,5 mm)

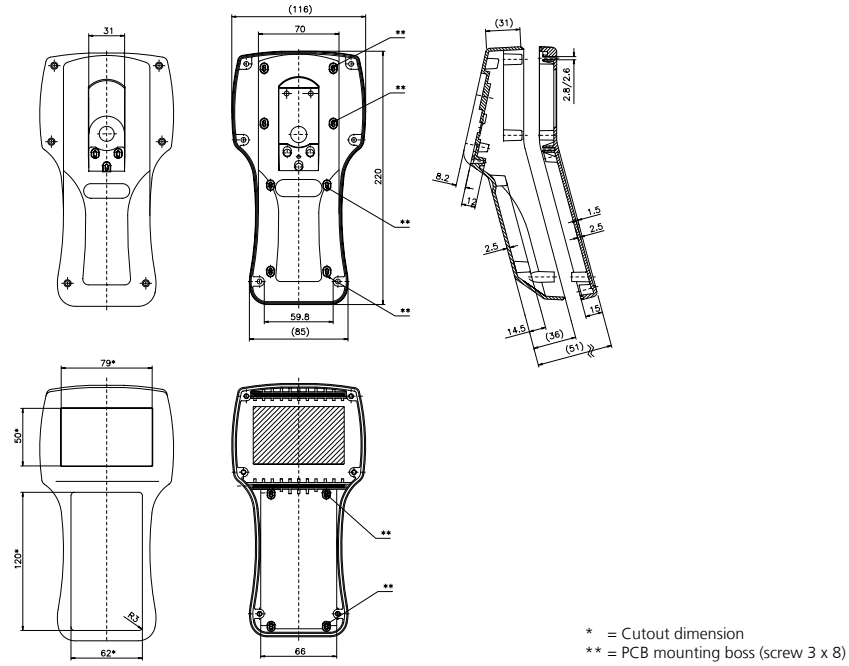

* = Cutout dimension
** = PCB mounting boss (screw 3 x 8)

Beluga 380



+ Polyamide hand held enclosure for MCR- and automation engineering
+ Execution with or without display opening
+ Prepared for keypads/silicone switch mats
+ Optional EMC Execution with internal coating and EMC seal

Included in delivery
Double-leaf enclosure with top and base unit, each with fixing domes, mounting / hook set, fastening and enclosure screws.

Technical data

Material	Polyamide
Ingress protection	IP 65 to EN 60529
Surface resistance	10^{12} Ohm, IEC 60093
Flammibility	UL 94 V-2
Colour	RAL 7021, black grey
Temperature range	-40 °C to +60 °C

Product range

Type	Order No.	Execution	Dimensions H x W x D (mm)	Weight (g)
Beluga 380	**27.02 05 01**	closed	380 x 117 x 68	670

Components mounting options

Component options	Type B380
Display (max. view area / max. mounting dimensions see drawing on page 53 - 58)	•
Emergency stop button	•
Push button	•
Enabling switch	•
Hand wheel	•
Step switch	•
Joy stick	•
Cable outlet up to M 20	•
1st board (main board)	•
Other boards	•



Fitting possibility of large displays (1/4 VGA)



Integrated hook set



Large installation space for electronic devices



Hook set, can be used as release lever

Accessories

Spare screws set

Order No.	Execution
27.02 05 83	Beluga 380

Hand strap

Order No.	Execution
27.02 05 81	for Beluga 380

Cable gland with bending protection



Order No.	Execution
08.10 01 16	M16x1.5
08.10 01 20	M20x1.5

Beluga 380

Accessories

Carrying strap

Order No.	Execution
27.02 05 80	for Beluga 380

Wall holder set



Order No.
27.02 05 82

Further accessories see chapter „Electro-mechanical components“

Technical details



Type	Execution	Order No.
Beluga 380	closed	**27.02 05 01**

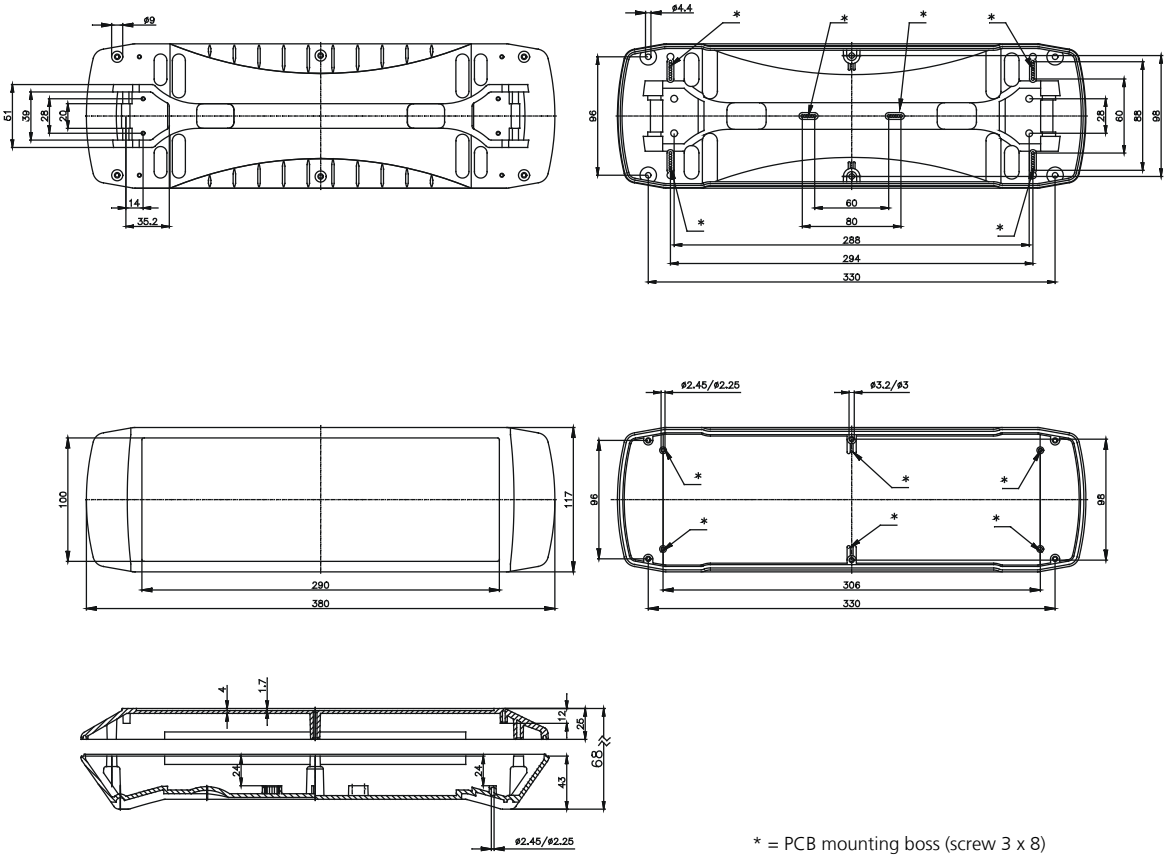

Pilot 250



+ Polyamide hand held enclosure for MCR- and automation engineering
+ Large installation space
+ Execution with closed lid or front frame lid
+ Rear battery compartment
+ Optional EMC Execution with internal coating and EMC seal

Included in delivery
Double-leaf enclosure with top and base unit, each with fixing domes, battery compartment lid, fastening and enclosure screws

Technical data

Material	Polyamide
Ingress protection	IP 65 to EN 60529
Impact resistance	7 Joule to EN 60529
Flammibility	UL 94 HB
Colour	Base and lid: RAL 7021, black grey Rear cover: RAL 5003, sapphire blue
Temperature range	-40 °C to +60 °C

Pilot 250

Product range

Type	Order No.	Execution upper shell	Dimensions H x W x D (mm)	Weight (g)
Pilot 250/1	**29.25 00 01**	closed	140/120 x 280 x 86	850
Pilot 250/2	**29.25 00 02**	lid frame	140/120 x 280 x 86	880

Accessories

Battery holder



Order No.	Execution
29.25 01 03	for 4 micro-cells
29.25 01 04	for 9V monobloc

Front plate

Order No.	Execution
29.25 01 01	for Pilot 250/2

Cable gland with bending protection



Order No.	Execution
08.10 01 16	M16x1.5
08.10 01 20	M20x1.5

Magnet holder



Order No.
29.25 01 02

Wall holder



Order No.
29.25 01 05

Further accessories see chapter „Electro-mechanical components“

Technical details



Type	Execution	Order No.
Pilot 250/1	closed	**29.25 00 01**
Pilot 250/2	lid frame	**29.25 00 02**

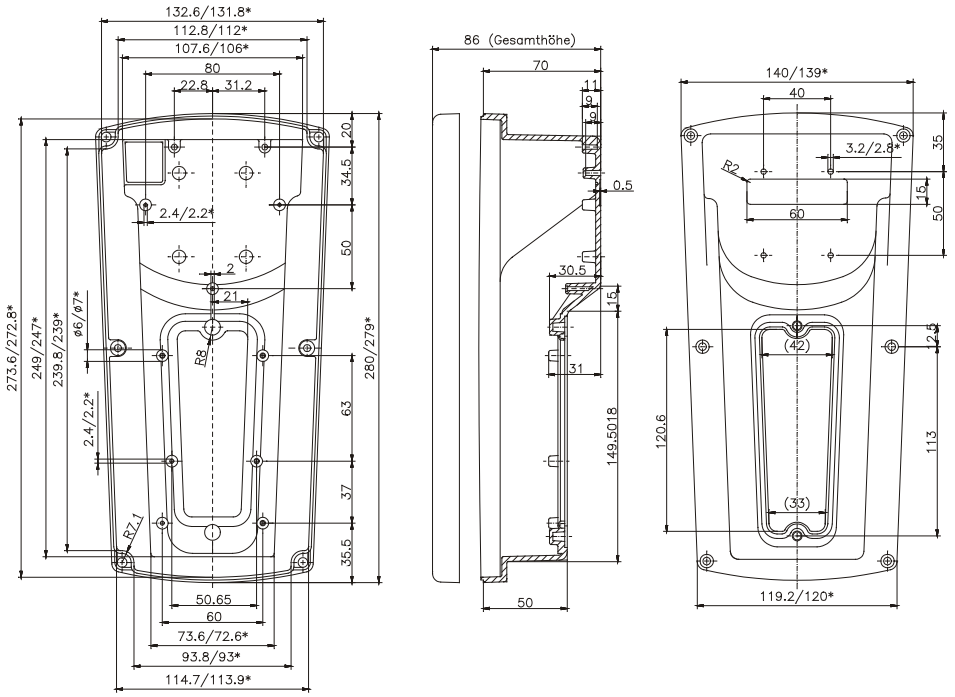

* = Concial form tapering downwards

Closed lid

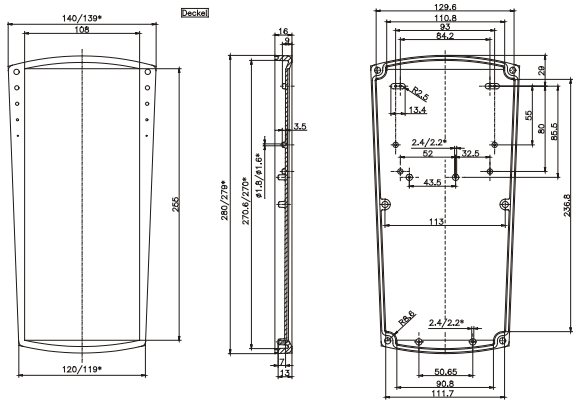

Lid frame

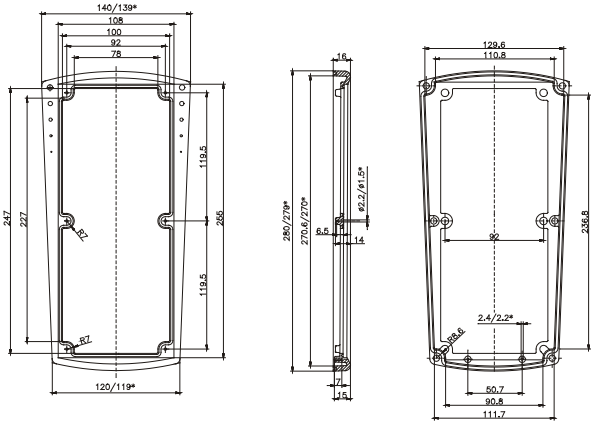

Pilot 50



+ Polyamide / PVC hand held enclosure for MCR and automation engineering
+ Large installation space
+ Variable length by using profile technology
+ Robust construction

Included in delivery
Enclosure system consisting of internal polyamide enclosure with end covers, two lateral PVC cover profiles, Alucobond composite front plate, rear wall, 2 external end covers, with M 25 x 1.5 threaded hole for cable gland

Technical data

Material	Polyamide 6 PVC
Ingress protection	IP 65 to EN 60529
Impact resistance	5 Joule, EN 60079-0
Flammibility	End covers: UL 94 HB
Colour	End covers: RAL 1003, rape yellow PVC-profile: RAL 9005, jet black

Product range

External enclosure dimensions H x W x D (mm)	Order No. Standard complete	Weight (g)	Standard rear wall seperate	Standard front plate separate
280 x 191 x 76	**29.11 10 00**	**1340**	**29.11 00 01**	**29.11 00 02**
330 x 191 x 76	**29.12 10 00**	**1520**	**29.12 00 01**	**29.12 00 02**
440 x 191 x 76	**29.13 10 00**	**1940**	**29.13 00 01**	**29.13 00 02**
Special length	**29.19 10 00**		**29.19 00 01**	**29.19 00 02**



Pilot with small control device



Inner T-slots offer mounting facilities on all sides



Variable fittings

Pilot 50

Accessories

Mounting set



Order No.	Execution
29.00 00 50	M4, set = 4 pcs

Front plate

Order No.	Execution
29.11 00 02	for 29.11
29.12 00 02	for 29.12
29.13 00 02	for 29.13
29.19 00 02	Special length

Cable gland with bending protection



Order No.	Execution
08.10 01 25	M25x1.5

Rear wall

Order No.	Execution
29.11 00 01	for 29.11
29.12 00 01	for 29.12
29.13 00 01	for 29.13
29.19 00 01	Special length

Wall holder



Order No.	Execution
29.00 00 70	for Pilot 50 (single)
29.00 00 80	Magnetic wall holder
29.00 10 00	incl. enclosure machining

Further accessories see chapter „Electro-mechanical components“

Technical details



Standard	Dimensions	Weight (g)
29.11 10 00	280 x 191 x 76	1660
29.12 10 00	330 x 191 x 76	1900
29.13 10 00	440 x 191 x 76	2200
29.19 10 00	Special length	

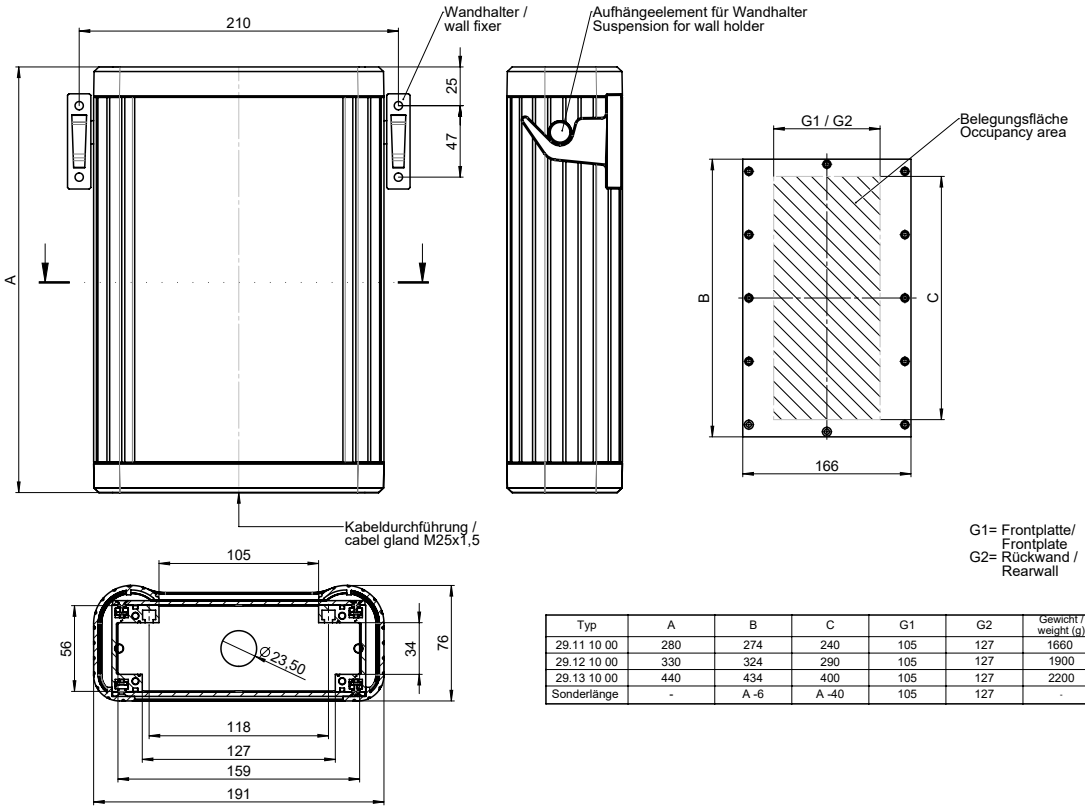

Typ	A	B	C	G1	G2	Gewicht / weight (g)
29.11 10 00	280	274	240	105	127	1660
29.12 10 00	330	324	290	105	127	1900
29.13 10 00	440	434	400	105	127	2200
Sonderlänge	-	A -6	A -40	105	127	-

Type	A	B	C	D	G
29.11 10 00	274	-	92	240	105/127
29.12 10 00	324	162	81	290	105/127
29.13 10 00	434	217	109	400	105/127
Special size, A ≤ 300 mm	enclosure length - 6	-	A/3	A - 34	105/127
Special size, A ≥ 300 mm	enclosure length - 6	A/2	A/4	A - 34	105/127

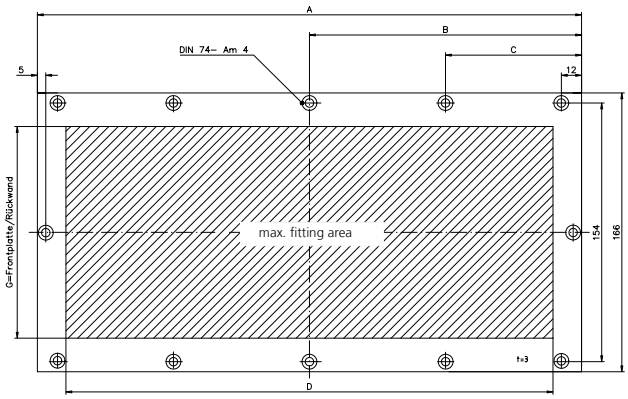

Pilot 10/20/30



+ Hand held enclosure for MCR and automation engineering
+ Robust design (Polyamide or Polyester)
+ Execution with handle and integrating cable outlet (Pilot 10, 20 standard)

Included in delivery

Pilot 10/20: enclosure with handle, including cable gland M 20 x 1,5, front plate with fastening screw and wall holder

Pilot 30: two-part Polyester enclosure with self-adhesive aluminium front plate, enclosure screws and wall holder

Technical data

Material	Pilot 10 and Pilot 20: Polyamide; Pilot 30: Polyester
Ingress protection	IP 65 to EN 60529
Impact resistance	7 Joule, EN 60079-0
Flammability	Pilot 10 and Pilot 20: UL 94 HB Pilot 30: self-extinguishing UL 94 V-0
Colour	Pilot 10 and Pilot 20: RAL 1003, signal yellow Pilot 30: RAL 1021, rape yellow
Temperature range	-40 °C to +60 °C

Product range

Type	Order No.	Enclosure dimensions incl. handle H x W x D (mm)	Front plate dimensions W x H (mm)	Mounting depth (mm)
Pilot 10	**29.40 02 00**	70 x 93 x 190	61 x 59	67
Pilot 20	**29.30 01 00**	115 x 93 x 200	106 x 69	67
Pilot 30	**29.50 01 00**	164 x 116 x 295	70 x 280	71



One button and two button enclosure Pilot 10 / Pilot 20



Integrated handles on Pilot 10 and Pilot 20



Switch enclosure Pilot 30

Accessories

Cable gland with bending protection



Order No.	Execution
08.10 01 20	for Pilot 30

Mounting plate

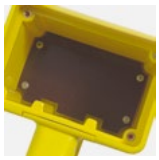

Order No.	Execution
29.31 00 00	for Pilot 20

Wall holder



Order No.	Execution
29.60 01 00	for Pilot 10/20/30

Further accessories see chapter „Electro-mechanical components"

Pilot 10/20/30

Technical details



Type	Order No.	Weight (g)
Pilot 10	**29.40 02 00**	300
Pilot 20	**29.30 01 00**	550

Pilot 10

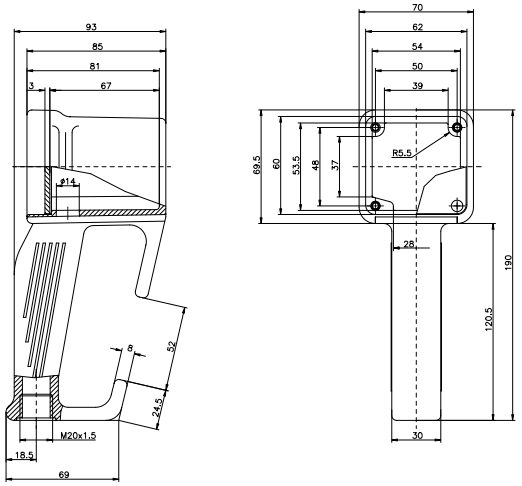

Pilot 20

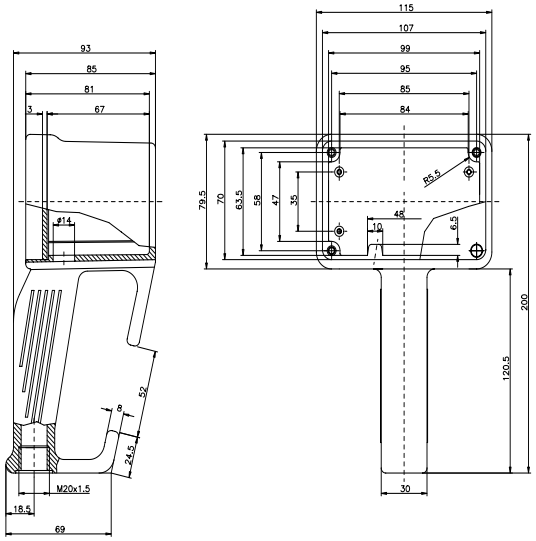



Type	Order No.	Weight (g)
Pilot 30	**29.50 01 00**	1700

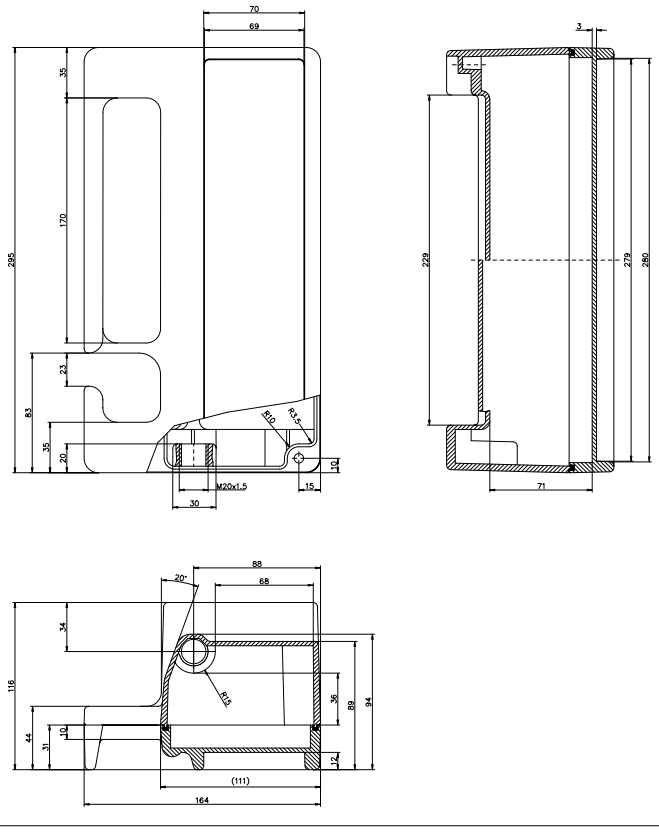

Pilot 110 - 150



+ Polyamide hand enclosure for automation and control engineering
+ Execution with handle and integrated cable entry
+ Large installation space

Included in delivery
Enclosure with handle, including cable gland M 20 x 1.5, front plate, enclosure and front panel screws, and wall holder

Technical data

Material	Polyamide; front plate: Polystyrene
Ingress protection	IP 65 to EN 60529
Impact resistance	7 Joule, EN 60079-0
Flammability	UL 94 HB
Colour	RAL 1003, signal yellow
Temperature range	-40 °C to +60 °C

Pilot 110 - 150

Product range

Type	Order No.	Enclosure dimensions incl. handle H x W x D (mm)	Front plate dimensions H x W (mm)	Mounting depth (mm)
Pilot 110	**29.21 10 00**	85 x 85 x 191	77 x 77	63,5
Pilot 120	**29.21 20 00**	115 x 85 x 191	107 x 77	63,5
Pilot 130	**29.21 30 00**	85 x 85 x 221	77 x 107	63,5
Pilot 140	**29.21 40 00**	160 x 85 x 211	152 x 97	63,5
Pilot 150	**29.21 50 00**	105 x 85 x 266	97 x 152	63,5

Accessories

Wall holder



Order No.	Execution
29.00 00 80	Magnetic wall holder for Pilot 120 - 150

Further accessories see chapter „Electro-mechanical components“

Technical details



Type	Order No.	Weight (g)
Pilot 110	**29.21 10 00**	390

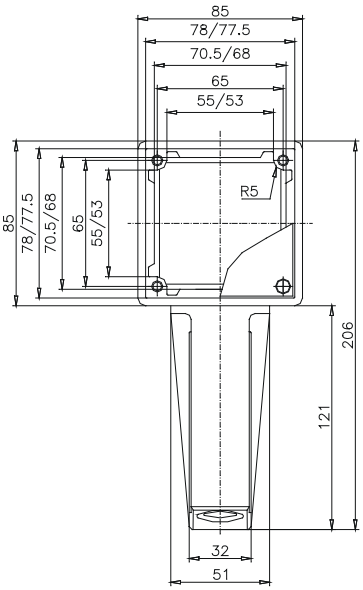

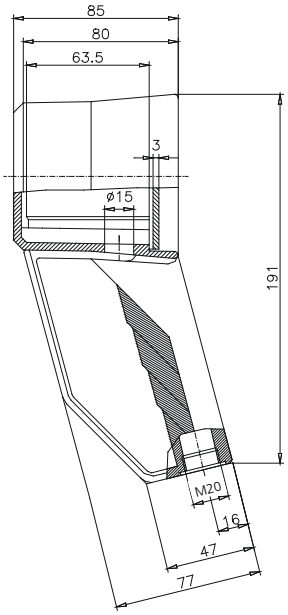



Type	Order No.	Weight (g)
Pilot 120	**29.21 20 00**	550
Pilot 130	**29.21 30 00**	430

Pilot 120

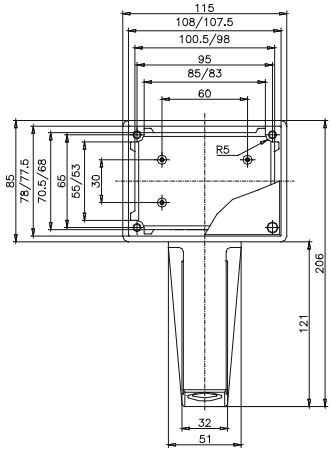

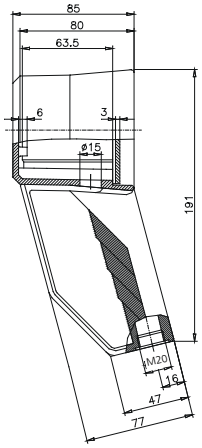

Pilot 130

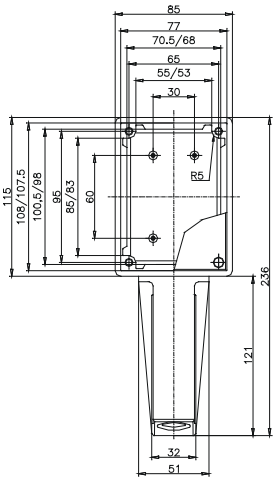

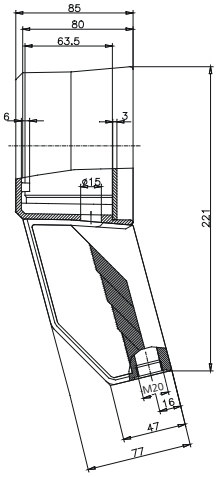

Pilot 110 - 150

Technical details



Type	Order No.	Weight (g)
Pilot 140	**29.21 40 00**	550
Pilot 150	**29.21 50 00**	780

Pilot 140

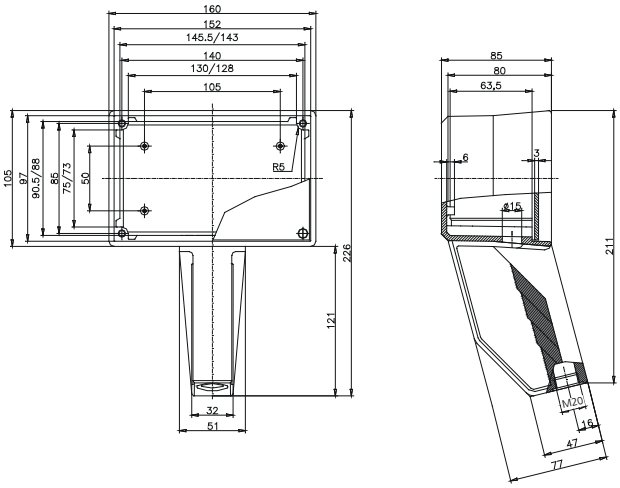

Pilot 150

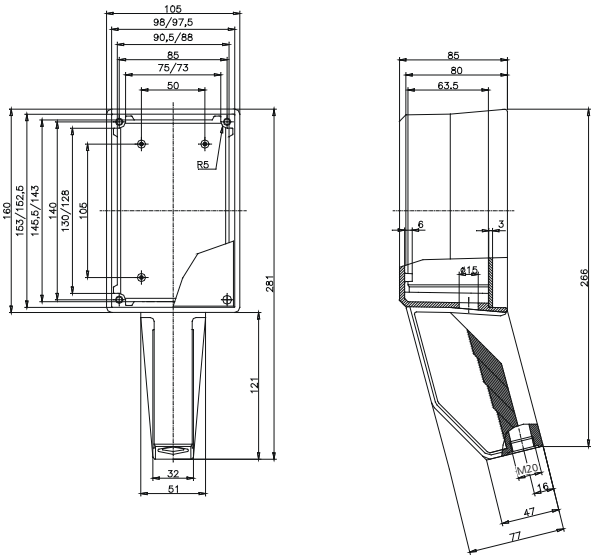

Electro-mechanical components

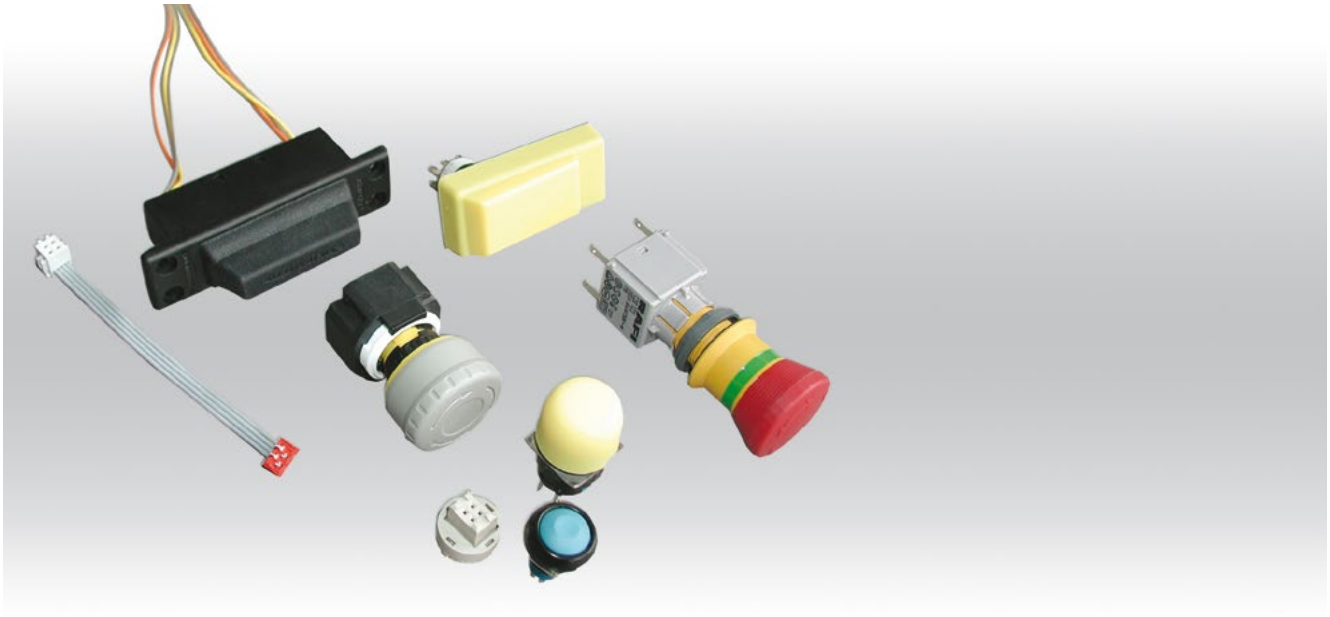

For assembling of enclosures there is available a huge range of switches / push buttons:
- enabling switches
- emergency stop button
- accessories

Electro-mechanical components

Components

Enabling switch



Order No.	Execution
83.50 00 10	2-step enabling switch (1 NO), blue
83.50 00 09	2-step enabling switch (1 NC/ 1 NO), blue

Technical data

Contact loading	48 V (AC), 500 mA 250 V (AC), 200 mA 50 V (DC), 200 mA
Ingress protection	IP 67 front side
Temperature range	-40°C to +125°C (no condensation)
Volume resistance	max. 50 mW (initial value)
Service life	≥ 5 x 10^5 switchings

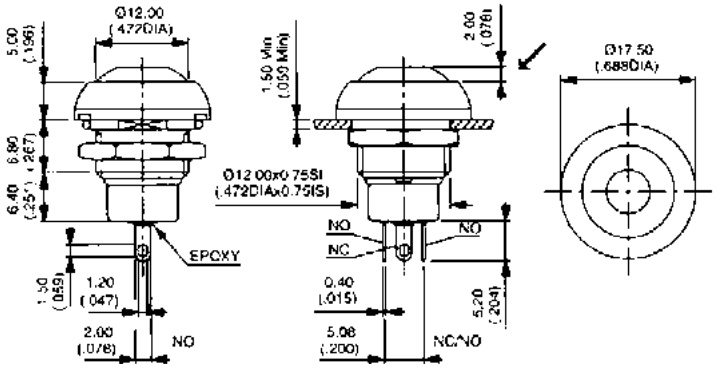

Emergency stop button



Order No.	Execution
83.50 00 02	Emergency stop button (2NC), Ø 25 mm, red

Technical data

Contact system and fitting	2 NC
Ingress protection	IP 65 front side
Temperature range	-25 °C to +70 °C (no condensation)
Connections	galvanized, suitable to 4-pole multipoint socket connector
Switching voltage	0,02 to 25 V AC/DC
Switching current	0,1 to 1 A
Volumne resistance	< 100 mW
Duration of bounce	< 10 ms
Service life	> 1,5 x 10^4 switchings

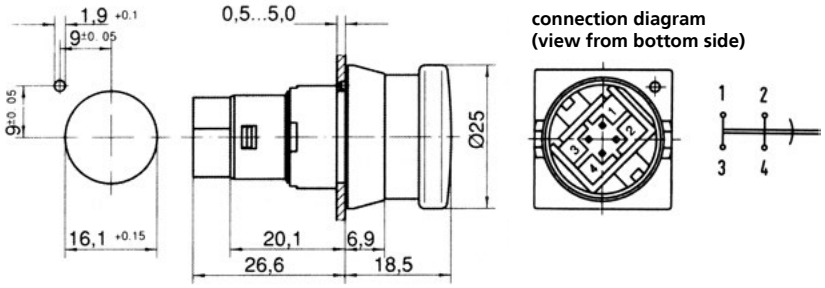

Components

PCB plug-socket



Order No.	Execution
83.90 00 01	PCB plug-socket for emergency stop button, Ø 25 mm

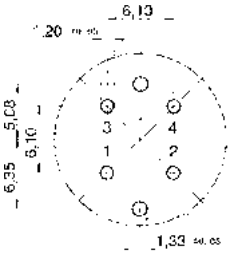

Cotact fitting area

NC 1: Pin 1 - blue
Pin 2 - black
NC 2: Pin 3 - blue
Pin 4 - black

Ribbon cable



Order No.	Execution
83.90 00 02	10 cm with multipoint socket connector and strip, AMP 4-pole for emergency stop button Ø 25 mm

Emergency stop button



Order No.	Execution
83.50 00 03	Emergency stop button with switch unit (2NC), Ø 28 mm, red

Technical data

Contact system and fitting	self cleaning bridge forming contact (Ag), 2 NC
Ingress protection	IP 65 front side
Temperature range	-25°C to +70°C (no condensation)
Connections	Flachstecker 2.8 x 0.8
Switching voltage	AC: 250 V / DC: 24 V (further voltage on request)
Switching current	AC: 1,5 A / DC: 2,0 A
Volumne resistance	max. 20 mW (initial value)
Service life	≥ 3 x 10^4 switchings

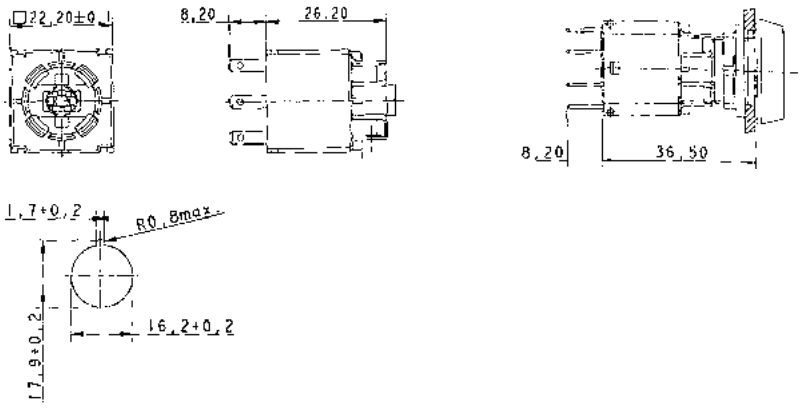

Electro-mechanical components

Components

Button



Order No.	Execution
83.50 00 04	Emergency stop button (3NC/1NO), Ø 29 mm, red
83.50 00 05	Stop push button (3NC/1NO), Ø 29 mm, grey
83.90 00 07	Emergency stop label for command element, 16 mm, yellow, 4 speeches, 40 x 40 mm

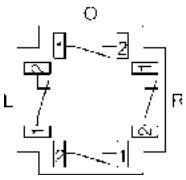

Direct contact
1 NC: conntections right
2 NC: connections right and left
3 NC: connections right, left and above

Technical data

Contact system and fitting	obligation-led contacts (3 NC / 1 NO)
Ingress protection	IP 65 front side
Temperature range	-25°C to +60°C (no condensation)
Connections	soldered connection
Switching voltage (direct contact)	AC(12): 250 V / DC(12): 30 V
Switching current (direct contact)	AC(12): 3,0 A / DC(12): 2,0 A
Switching voltage (indirect contact)	AC(12): 250 V / DC(12): 30 V
Switching current (indirect contact)	AC(12): 0,6 A / DC/12): 2,0 A
Volume resistance	max. 50 mW (initial value)
Service life	≥ 1 x 10^5 switchings

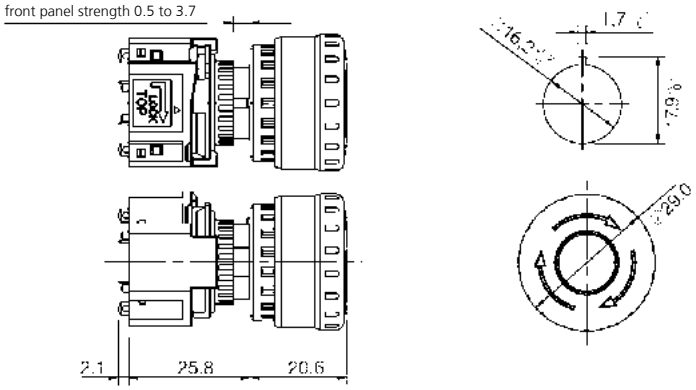

Enabling switches



Order No.	Execution
83.50 00 06	3-steps enabling switches (2 changer), 80 x 22, black

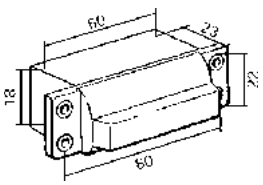

Technical data

Contact system and fitting	2 main switches (changer)
Contact raiting	30 V DC, max. 0,5 A
Ingress protection	IP 65
Temperature range	0°C to +50°C
Fullfilled standards	89/392/EWG; IEC 204-1: EN 60204/DIN VDE 0113; DIN VDE 0110: EN292

Connection diagram

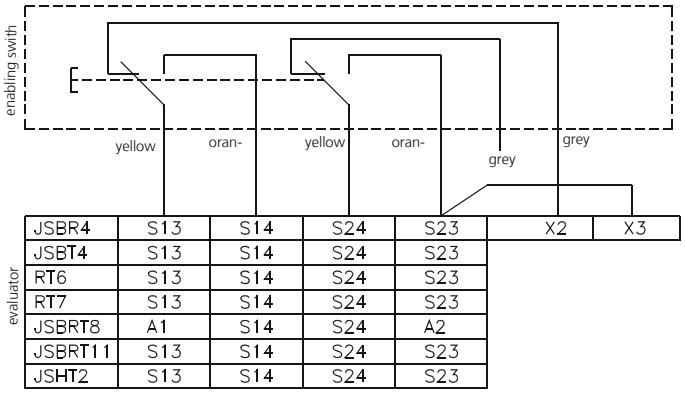

evaluator							
JSBR4	S13	S14	S24	S23	X2	X3
JSBT4	S13	S14	S24	S23		
RT6	S13	S14	S24	S23		
RT7	S13	S14	S24	S23		
JSBRT8	A1	S14	S24	A2		
JSBRT11	S13	S14	S24	S23		
JSHT2	S13	S14	S24	S23		

Components

Enabling switches



Order No.	Execution
83.50 00 07	3-step enabling switches (2 changers), 55 x 25, yellow

Technical data

Contact system and fitting	2 main switches (changer)
Ingress protection	IP 65 (with rubber cap)
Temperature range	-25°C to +60°C (no condensation)
Connections	soldered condensation
Switching voltage	AC(12): 125 V / DC(12): 30 V
Switching current	AC(12): 1,0 A / DC(12): 1,0 A
Volume resistance	max. 50 mW (initial value)
Service life	≥ 1 x 10^5 switchings

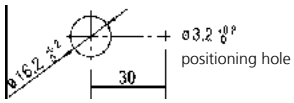

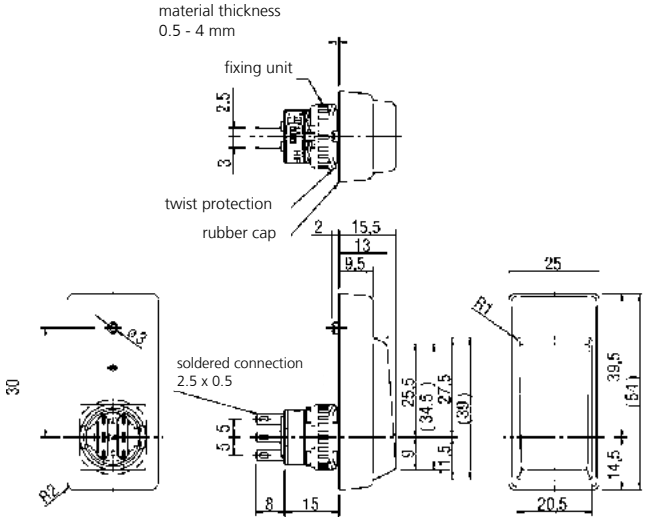

Enabling switches



Order No.	Execution
83.50 00 08	3-steps enabling switches (2 changer), Ø 20 mm, yellow

Technical data

Contact system and fitting	2 main switches (changer)
Ingress protection	IP 65 (with rubber cap)
Temperature range	-10°C to +60°C (no condensation)
Connections	soldered connection
Switch voltage	AC(12): 125 V / DC(12): 30 V
Switch current	AC(12): 0,5 A / DC(12): 1,0 A
Volume resistance	max. 50 mW (initial value)
Service life	≥ 1 x 10^5 switchings

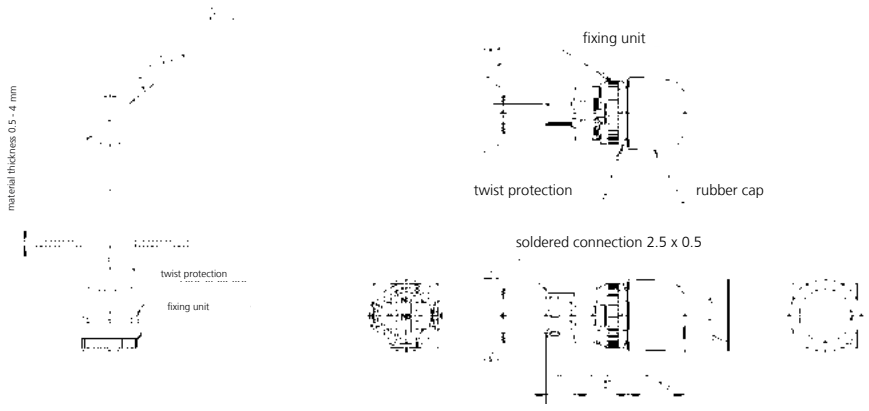

Electro-mechanical components

Product allocation

Products	2-step enabling switches (1NO), blue	2-step enabling switches (1NC/1NO), blue	Emergency stop button (2NC), Ø 25 mm, red	PCB-plug-socket for emergency stop button Ø 25 mm	Ribbon cable 10 cm with multipoint socket connector and strip, AMP 4-pole for emergency stop button Ø 25 mm	Emergency stop button with contact block (2NC), Ø 28 mm, red
Order No.	**83.50 00 10**	**83.50 00 09**	**83.50 00 02**	**83.90 00 01**	**83.90 00 02**	**83.50 00 03**
Taguan 130			•	•	•	
Taguan 180			•	•	•	
Taguan 230			•	•	•	
Beluga 180	•	•	•	•	•	•
Beluga 220	•	•	•	•	•	•
Beluga 380	•	•	•	•	•	•
Pilot 250	•	•	•	•	•	•
Pilot 50			•	•	•	•
Pilot 10			•	•	•	•
Pilot 20			•	•	•	•
Pilot 30			•	•	•	•
Pilot 110			•	•	•	•
Pilot 120			•	•	•	•
Pilot 130			•	•	•	•
Pilot 140			•	•	•	•
Limanda I Handle set	•	•				
Limanda I	•	•	•	•	•	•
Limanda II	•	•	•	•	•	•
Norvent	•	•	•	•	•	•

Products	Emergency stop button (3NC/1NO), Ø 29 mm, red	Stop button (3NC/1NO), Ø 29 mm, grey	3-steps enabling switches (2 changer), 80 x 22, black	3-steps enabling switches (2 changer), 55 x 25, yellow	3-steps enabling switches (2 changer), Ø 20 mm, yellow
Order No.	**83.50 00 04**	**83.50 00 05**	**83.50 00 06**	**83.50 00 07**	**83.50 00 08**
Taguan 130					
Taguan 180					
Taguan 230					
Beluga 180	•	•			
Beluga 220	•	•			•
Beluga 380	•	•			
Pilot 250	•	•	•	•	•
Pilot 50	•	•			
Pilot 10	•	•			•
Pilot 20	•	•			
Pilot 30	•	•			
Pilot 110	•	•			•
Pilot 120	•	•			
Pilot 130	•	•			
Pilot 140	•	•			
Limanda I Handle set			•		•
Limanda I	•	•	•		•
Limanda II	•	•	•	•	•
Norvent	•	•	•	•	•

L'IMPULSION

Retrouvez nous sur
www.limpulsion.fr

812050 05/2026

ROSE Systemtechnik GmbH
Erbeweg 13-15 | D-32457 Porta Westfalica
Fon +49 571 50 41 0 | E-Mail rose@rose-pw.de
www.rose-systemtechnik.com

ROSE

A Phoenix Mecano Company