L'IMPULSION
Retrouvez nous sur
www.limpulsion.fr

PTR HARTMANN

A Phoenix Mecano Company



CONNECTION TECHNOLOGY

Quality Down to the Tiniest Detail

L'IMPULSION Retrouvez nous sur www.limpulsion.fr



WE COMBINE PRECISION, INNOVATION AND RELIABILITY FOR YOUR BENEFIT.

PTR HARTMANN is responding to the globalisation of markets with an expanded distribution network. In over 50 countries worldwide, qualified personnel ensure that our products and services are always available to customers.

L'IMPULSION | Retrouvez nous sur www.limpulsion.fr



Areas of Operation

- PCB Terminal Blocks and PCB Multi-Connectors
- Integrated Connection Technology
- Interface Pin Blocks
- Switches
- DIN Rail Terminal Blocks
- Test Probes for PCB and Cable Test
- Customer-specific Inductors

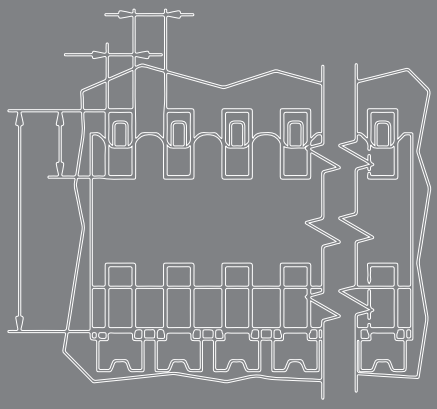

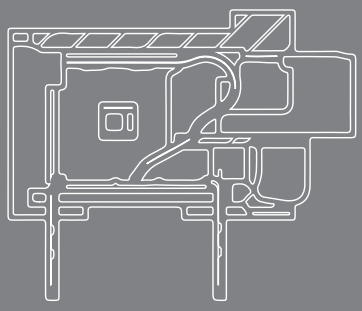

INTRODUCTION

Good functionality, high efficiency, excellent precision and absolute reliability in delivery performance

Customers all over the world are putting their faith in products from PTR HARTMANN. We combine quality and reliability with the aim of offering optimal solutions for customer-specific requirements, and these are features of ours which have a long tradition. Since 1979, and in addition to a constantly growing range of products, they have played an important part in ensuring that today we are one of the global players in the electromechanical components sector. Excellent and innovative solutions in the field of connection and testing technology have become hallmarks of our company. As a consequence of PTR HARTMANN's 1989 integration in the Swiss company of Phoenix Mecano AG, our worldwide presence has increased even further. For example, PTR HARTMANN PCB terminal blocks and PCB multi-connector, switches, test probes, inductors and DIN rail terminal blocks are now available in more than 60 countries.

We set standards by using German engineering, high-quality materials, flexible production methods and well-thought-out logistics.

What's more, the areas of application for our PCB terminal blocks and PCB multi-connectors are very diverse. PTR HARTMANN products are used in sectors from automation technology, safety engineering and telecommunications right up to building automation.
The market's requirements are constantly growing, and we respond with flexible and targeted solutions. The ongoing design and construction of PCB terminal blocks and PCB multi-connectors for customer-oriented solutions result in the development and expansion of our range of products. We also specialise in developing and implementing professional concepts together with the customer.

Special designs of PCB terminal blocks and PCB multi-connectors such as special lengths for soldering pins, different colours, partly-assembled PCB terminal blocks, marking with pad printing, inkjet printing or laser marking are just as much a part of our scope of delivery as the supplying of modules, fully-populated PCBs with or without pre-assembled cables as well as PCB terminal blocks and pin strips in tape-on-reel, tube or tray packaging.

In addition, thanks to our extensive experience in the field of test technology, we also have a high level of competence and excellent know-how in the construction and production of test probes sector. All our experience has been used to set up a new range of products. Interface pin blocks expand and extend this range, and are used wherever rechargeable batteries needed for mobile devices such as scanners, card readers, communications equipment etc. must be charged, for example on e-bikes where the battery connections are integrated in the operating unit and the display. They are also popular for LED illumination in shopfitting and for smart home solutions, and are often used to connect two PCBs. They can be supplied production-ready on tape-on-reel and in trays for both purposes.

The on-going development of our products to meet market requirements is both a task and an obligation for us.

The result: New applications for different fields of use in connection technology. Without any doubt, one highlight is the steadily growing development of PTR's own integrated connection technology, which can be used in a very wide variety of enclosures. Of course, in addition to our standard products, we also meet customers' special requirements. Any company which provides outstanding performance can never leave anything to chance, so implementing modern quality management systems is an absolute necessity. With these goals in mind, it is vital that we continue to expand our focus on quality and to document this in a quality management system. In order to ensure success, both the group and the company management committed themselves to the early introduction of a QM system in accordance with EN IS0 9001 so that we can continue to meet the market's and our customers' high profile of requirements.

Success also means responsibility.

For PTR HARTMANN, the relationship to the environment, and preservation of a living space for future generations, represent an obligation. Of course, we also comply with EU directives such as ROHS2 (2011/65/EU) and REACH (1907/2006/EC) in their current versions. Compliance with various laws and directives is checked on a regular basis and confirmed when the conditions are met. In part, these include local laws and guidelines, or, for example, also the United States' Dodd-Frank Act Section 1502, which deals with the subject of conflict minerals.

All the information in this catalogue has been compiled to the best of our knowledge and belief and is correct at the time of going to print. Up-to-date information is available at all times on PTR HARTMANN's website at www.ptr-hartmann.com

L'IMPULSION Retrouvez nous sur www.limpulsion.fr

Content

	PHOENIX MECANO AG	**10**
	PTR HARTMANN WEBSITE	**14**
	INTEGRATED CONNECTION TECHNOLOGY	**16**
	YOUR BENEFITS	**20**
	TECHNICAL COMPENDIUM	**22**
	Clamp Types	22
	Automated Assembly of PCBs	24
	Soldering Processes	26
	PRINTING PROCESSES	**28**
	ARTICLE DESIGNATION	**29**
1	**PCB TERMINAL BLOCKS**	**30**
01.	**SCREW TERMINAL BLOCKS**	**32**
1	**Wire Guard Type**	**32**
	Spacing 3.5 mm	32
	AK550/..-V	32
	AK550/..-H	33
	Spacing 5.0 mm / 5.08 mm	
	AK100/..-V	34
	AKZ120/..-V	35
	AK100/..-V-BL	36
	AK100/..-H	37
	AKZ120/..-H	38
	AK100/..-H-BL	39
	AK104/..-V	40
	AK(Z)500/..-V	41
	AK500/..-V-BL	42
	AK(Z)500/..-H	43
	AK500/..-H-BL	44
	AK590/..	45
	Spacing 7.0 mm / 7.62 mm	
	AK550/..-V	46
	AK550/..-H	47
	AK110/..-V	48
	AK110/..-H	49
	AK114/..-V	50
	Spacing 10.0 mm / 10.16 mm	
	AK100/..-V	51
	AKZ120/..-V	52
	AK100/..-V-BL	53
	AK100/..-H	54
	AKZ120/..-H	55
	AK100/..-H-BL	56
	AK(Z)500/..-V	57
	AK500/..-V-BL	58
	AK(Z)500/..-H	59
	AK500/..-H-BL	60
NEW	EK104	61
NEW	EK105	62
2	**Lift Type**	**63**
	Spacing 2.54 mm	
	AKZ692/..-V	63
	Spacing 3.5 mm / 3.81 mm	
	AK(Z)601/..-V	64
	AKZ602/..-V	65
	Spacing 5.0 mm / 5.08 mm	
	AKZ250/..-V	66
	AK(Z)300/..	67
NEW	AK300/..-BL-HT	68
NEW	AK300/..-BL-HT	69
	AK340/..-OL	70
	AK340/..-OR	71
	AK(Z)350/..-V	72
	AK(Z)350/..-V-HC	73
	AK350/..-V-BR	74
NEW	AK(Z)350/..-V-FP	75
	AKZ350/..-V-HT	76
NEW	AKZ350/..-V-HT	77
	AKZ350/..-V-FP-HT	78
NEW	AKZ350/..-V-FP-HT	79
	AK(Z)350/..-H	80
	AK(Z)350/..-H-HC	81
	AK370/..-V	82
	AK370/..-V-HC	83
	AK(Z)700/..-V	84
	AK700/..-V-BR	85
	AK700/..-H	86
	AK(Z)750/..-V	87
	AKZ770/..-V	88
	AK790/..-V	89
	AK793/..-V	90
	Spacing 6.35 mm	
	AKZ840/..-V	91
	Spacing 7.5 mm / 7.62 mm	
	AK360/..-V	92
	AK360/..-V-HC	93
	AK360/..-H	94
	AK360/..-H-HC	95
	AK(Z)710/..-V	96
	Spacing 9.52 mm	
	AKZ841/..-V	97
	Spacing 10.0 mm / 10.16 mm	
	AKZ250/..-V	98
	AK(Z)350/..-V	99
	AK(Z)350/..-V-HC	100
	AK(Z)350/..-H	101
	AK(Z)350/..-H-HC	102
3	**Excenter Type**	**103**
	Spacing 5.0 mm	
	AK2200/..-V	103
	AK2200/..-H	104
	Spacing 7.5 mm	
	AK2200/..-V	105
	AK2200/..-H	106
	Spacing 10.0 mm	
	AK2200/..-V	107
	AK2200/..-H	108

02.	**SPRING TERMINAL BLOCKS**		**109**
1	**Push-In Type**		**109**
	Spacing 2.5 mm / 2.54 mm		
	AK4191/..KD		109
	AK4191/..KDVP		110
	AKZ4791/..KD-V		111
	AKZ4791/..KD-H		112
	Spacing 3.5 mm / 3.81 mm		
	AK4291/..KD		113
	AK4291/..KD/1		114
	AK4291/..KDVP		115
	AK4291/..KDVP/1		116
NEW	AK4601/..KD-V-HT		117
NEW	AK4601/..KD-V-HT	ⓐ	118
NEW	AK4601/..KDVP-V-HT		119
NEW	AK4601/..KDVP-V-HT	ⓐ	120
NEW	AK4601/..KD-V-SMD	ⓐ	121
NEW	AK4601/..KD-H-HT		122
NEW	AK4601/..KD-H-HT	ⓐ	123
NEW	AK4601/..KDVP-H-HT		124
NEW	AK4601/..KDVP-H-HT	ⓐ	125
NEW	AK4601/..KD-H-SMD	ⓐ	126
	AKZ4701/..KD-V		127
	AKZ4701/..KD-H		128
	Spacing 4.0 mm		
	AK4091/..KD-SMD	ⓐ	129
	Spacing 5.0 mm / 5.08 mm		
	AK4100/..		130
	AK4101/..KD		131
	AK4200/..-V		132
	AK4200/..-H		133
	AKZ4301/..KD		134
	Spacing 6.0 mm		
NEW	AK4092/..KD-HT		135
NEW	AK4092/..KD-HT	ⓐ	136
NEW	AK4092/..KD-SMD	ⓐ	137
	Spacing 6.35 mm		
	AKZ4801/..KD-V-HT		138
	AKZ4841/..KD-OL-HT		139
	AKZ4841/..KD-OR-HT		140
	Spacing 7.5 mm		
	AK4200/..-V		141
	AK4200/..-H		142
	AK4210/..-V		143
	AK4210/..VP-V		144
	AK4210/..-H		145
	AK4210/..VP-H		146
	Spacing 11.5 mm		
	AK4210/..-V		147
	AK4210/..-H		148
2	**Tension Spring Type**		**149**
	Spacing 2.5 mm / 2.54 mm		
	AK(Z)3191/..		149
	AK(Z)3191/..KD		150
	Spacing 5.0 mm / 5.08 mm		
	AK3000/..		151
	AK3001/..KD		152
	AK3001/..FKD		153
	AK3001/..WD		154
	AK3100/..		155
	AK3100/..FP		156
	AK3101/..KD		157
	AK3101/..WD		158
	AK(Z)3750/..		159
	AK(Z)3750/..-PD10.0(10.16)		160
	AK(Z)3750/..VP		161
	Spacing 7.5 mm		
	AK3010/..		162
	AK3011/..KD		163
	AK3011/..FD		164
	AK3011/..WD		165
	Spacing 10.0 mm		
	AK3000/..		166
	AK3001/..KD		167
	AK3001/..FD		168
	AK3001/..WD		169
2	**PCB MULTI-CONNECTOR**		**170**
01.	**SCREW TERMINAL BLOCKS**		**172**
1	**Wire Guard Type**		**172**
	Spacing 3.5 mm		
	AK1350/..		172
	AK1350/..-CP		173
	Spacing 5.0 mm / 5.08 mm		
	AK130/..		174
	AK130/..-BR		175
	AK(Z)130/..-BL		176
	AK133/..		177
NEW	AK136/..		178
	Spacing 10.0 mm / 10.16 mm		
	AK130/..		179
	AK(Z)130/..-BL		180
2	**Lift Type**		**181**
	Spacing 3.5 mm / 3.81 mm		
	AK(Z)1550/..		181
	AK(Z)1550/..F		182
	AK(Z)1700/..		183
	AK(Z)1700/..F		184
	AK(Z)1710/..		185
	AK(Z)1710/..F		186
	Spacing 5.0 mm / 5.08 mm		
NEW	AKZ1520/..		187
NEW	AKZ1520/..F		188
	AK(Z)950/..		189
	AK(Z)950/..-HC		190
	AK(Z)950/..F		191
	AK(Z)950/..F-HC		192
	AK(Z)955/..		193

L'IMPULSION Retrouvez nous sur www.limpulsion.fr

Content

	AKZ950/..-INV		194
	AK1100/..		195
	AKZ1100/..		196
	AKZ1100/..F		197
	AK1110/..		198
	AKZ1110/..		199
	AKZ1110/..F		200
	AKZS950/..G		201
	AKZS950/..F		202
	AKZS950/..GMB		203
	Spacing 7.62 mm		
	AKZ960/..		204
NEW	AKZ960/..-HC		205
	AKZ965/..F		206
3	**Excenter Type**		**207**
	Spacing 5.0 mm / 5.08 mm		
	AK(Z)1200/..		207
	AK(Z)1200/..F		208
02.	**SPRING TERMINAL BLOCKS**		**209**
1	**Push-In Type**		**209**
	Spacing 3.5 mm / 3.81 mm		
	AK4350/..G		209
NEW	AK4541/..KD		210
NEW	AK4541/..FRKD		211
	AK(Z)4551/..KD		212
	AK(Z)4551/..FKD		213
	AK(Z)4561/..KD		214
	AK(Z)4561/..FKD		215
	Spacing 5.0 mm / 5.08 mm		
	AK(Z)4951/..KD		216
	AK(Z)4951/..FKD		217
	Spacing 7.62 mm		
NEW	AKZ4961/..KD		218
NEW	AKZ4961/..FKD		219
2	**Tension Spring Type**		**220**
	Spacing 5.0 mm		
	AK3950/..		220
03.	**PIN STRIPS**		**221**
	Spacing 3.5 mm / 3.81 mm		
	STL1350/..-V		221
	STL1350/..-V-HT		222
	STL1350/..-V-HT	ⓐ	223
NEW	STL1350/..-V-SMD	ⓐ	224
	STL1350/..-H		225
	STL1350/..-H-HT		226
	STL(Z)1550/..G-V		227
NEW	STL(Z)1550/..G-V-HT		228
NEW	STL(Z)1550/..G-V-HT	ⓐ	229
	STL(Z)1550/..F-V		230
NEW	STL(Z)1550/..F-V-HT		231
NEW	STL(Z)1550/..F-V-HT	ⓐ	232
	STL(Z)1550/..G-H		233
NEW	STL(Z)1550/..G-H-HT		234
NEW	STL(Z)1550/..G-H-HT	ⓐ	235
	STL(Z)1550/..F-H		236
NEW	STL(Z)1550/..F-H-HT		237
NEW	STL(Z)1550/..F-H-HT	ⓐ	238
	STLZ1570/..G-V		239
	STLZ1570/..G-H		240
	STLZ1570/..F-V		241
	STLZ1570/..F-H		242
	STL1590/..G		243
NEW	STL1541/..G-V		244
NEW	STL1541/..FR-V		245
NEW	STL1541/..G-H		246
NEW	STL1541/..FR-H		247
	Spacing 5.0 mm / 5.08 mm / 5.75 mm		
NEW	STLZ1520/..G-V		248
NEW	STLZ1520/..F-V		249
NEW	STLZ1520/..G-H		250
NEW	STLZ1520/..F-H		251
	STL(Z)130/..-V		252
	STL130/..-V-HT		253
	STL130/..-V-HT	ⓐ	254
	STL132/..-V		255
	STL132/..-V-HT		256
	STL132/..-V-HT	ⓐ	257
	STL133/..-V		258
	STL133/..-V-HT		259
	STL136/..-V		260
	STL136/..-V-HT		261
NEW	STL136/..-V-HT	ⓐ	262
NEW	STL136/..-V-SMD	ⓐ	263
	STL140/..-H		264
	STL140/..-H-HT		265
NEW	STL190/..-V-SMD	ⓐ	266
	STL(Z)950/..-V		267
	STL(Z)950/..-V-HT		268
	STL(Z)950/..-V-HT	ⓐ	269
	STL(Z)950/..-V-HC		270
	STL(Z)950/..-V-HC-HT		271
	STL(Z)950/..-V-HC-HT	ⓐ	272
	STL(Z)950/..G-V		273
	STL(Z)950/..G-V-HT		274
	STL(Z)950/..G-V-HT	ⓐ	275
	STL(Z)950/..G-V-HC		276
	STL(Z)950/..G-V-HC-HT		277
	STL(Z)950/..G-V-HC-HT	ⓐ	278
	STL(Z)950/..F-V		279
	STL(Z)950/..F-V-HT		280
	STL(Z)950/..F-V-HT	ⓐ	281
	STL(Z)950/..F-V-HC		282
	STL(Z)950/..F-V-HC-HT		283
	STL(Z)950/..F-V-HC-HT	ⓐ	284
	STLZ950/..-V-INV		285
	STL(Z)950/..-H		286
	STL(Z)950/..-H-HT		287
	STL(Z)950/..-H-HT	ⓐ	288
	STL(Z)950/..-H-HC		289
	STL(Z)950/..-H-HC-HT		290
	STL(Z)950/..-H-HC-HT	ⓐ	291

	STL(Z)950/..G-H		292
	STL(Z)950/..G-H-HT		293
	STL(Z)950/..G-H-HT		294
	STL(Z)950/..G-H-HC		295
	STL(Z)950/..G-H-HC-HT		296
	STL(Z)950/..G-H-HC-HT		297
	STL(Z)950/..F-H		298
	STL(Z)950/..F-H-HT		299
	STL(Z)950/..F-H-HT		300
	STL(Z)950/..F-H-HC		301
	STL(Z)950/..F-H-HC-HT		302
	STL(Z)950/..F-H-HC-HT		303
	STLZ950/..-H-INV		304
	STL955/..-OL		305
	STL955/..-OR		306
	STLZ970/..-V		307
	STLZ970/..-H		308
	STLZ970/..G-V		309
	STLZ970/..G-H		310
	STLZ970/..F-V		311
	STLZ970/..F-H		312
	STL975/..G-V		313
	STL975/..G-H		314
	STLZ990/..		315
	STLZ990/..G		316
	Spacing 7.62 mm		
	STLZ960/..-V		317
NEW	STLZ960/..-V-HC		318
	STLZ960/..G-V		319
NEW	STLZ960/..G-V-HC		320
	STLZ960/..-H		321
NEW	STLZ960/..-H-HC		322
	STLZ960/..G-H		323
NEW	STLZ960/..G-H-HC		324
	STLZ965/..F-V		325
	STLZ965/..F-H		326
	Spacing 10.0 mm / 10.16 mm		
	STL(Z)130/..-V		327
	STL130/..-V-HT		328
	STL132/..-V		329
	STL132/..-V-HT		330
3	**INTERFACE PIN BLOCKS**		**332**
	Series 5322 - FKB - SMD		334
	Series 5322 - PKB - SMD		335
	Series 5322 - L01		336
	Series 5322 - T01		337
	Series 5458 - SMD		338
	Series 5457 - SMD		339
4	**ACCESSORIES**		**340**
	Bridges insulated / uninsulated		342
	Coding Stars / Separating Elements		343
	Pull Reliefs / Mounting Rail Clips		344
	Spacer / Side Walls		345
	Wire-end Ferrules with Plastic Collars		346
5	**TECHNICAL ANNEX**		**348**
	Environment / Household Appliance IEC 60335-1		350
	Approvals / Regulations		351
	Rated Wire Sizes / Connectable Wire Sizes		352
	Overvoltage Categories I - IV		353
	Pollution Degrees 1 up to 4/ Insulation Material Groups		354
	Clearance and Creepage Distances		355
	Norm Tables		356
	Current-Carrying Capacity		358
	Tightening Torques for Terminal Screws		358
	Materials and Surfaces		359
	Products with Flanges / Tension Plates / Integrated Test Jacks		360
	Terminal Bridging / Coding		361
6	**REPRESENTATIONS**		**362**
	International		362
	Germany		366
7	**ORDER NUMBER / TYPE INDEX**		**368**
	Order Number Index		368
	Order Number Index Tape-on-Reel Products		370
	Type Index		370
	Type Index Tape-on-Reel Product		373
	IMPRINT		**374**

L'IMPULSION Retrouvez nous sur www.limpulsion.fr

PHOENIX MECANO AG

The Group Phoenix Mecano is a global player in the enclosures and industrial components segments, has a streamlined operating structure and is a leader in many markets. Geared towards the professional and cost-effective manufacture of niche products, it helps to ensure the smooth operation of processes and connections in the machine industry and industrial electronics. Its products are used in the mechanical engineering, measurement and control technology, alternative energy, medical technology, aerospace technology and home and hospital care sectors, amongst others.



Enclosures

Phoenix Mecano enclosures protect all types of electronic and electrical equipment, offering exactly the kind of protection the customer requires.

Areas of application include plant engineering, railway, automotive and medical technology and offshore oil platforms. In addition to enclosures, Phoenix Mecano also supplies input units such as membrane keyboards and keypads, short-stroke keys, capacitive buttons and touchscreens.



Mechanical Components

This division's wide range of linear actuators, electric cylinders and lifting columns are deployed in industry, workstation installation and the home and hospital care sector.

Its profile assembly systems can be used to assemble peripheral production systems right through to entire production lines.



ELCOM/EMS

The ELCOM/EMS division's products are used wherever electrical energy flows, whether it be high, medium or low voltage, alternating or direct current.

They can be found in all industrial sectors, from medical technology, astrophysics and aerospace, to power distribution networks, switchgear and renewable energy.

STRONG TOGETHER – PRODUCTS OF OUR GROUP OF COMPANIES

PTR

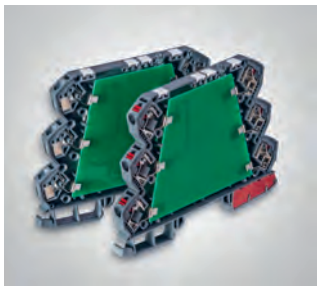

HARTMANN



HARTU



HARTMANN ELECTRONIC



PHOENIX MECANO
DIGITAL ELEKTRONIK



KUNDISCH



DEWERT OKIN



ATON



WIENER

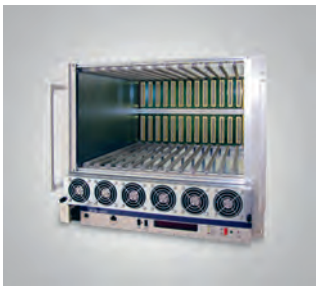

DEWERT OKIN

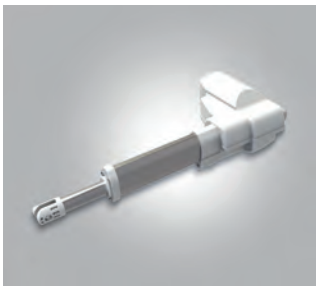

ROSE



RK ROSE+KRIEGER



WIJDEVEN



BOPLA



ISMET



PM SPECIAL MEASURING SYSTEMS

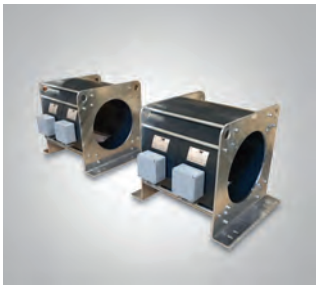

REDUR



L'IMPULSION | Retrouvez nous sur www.limpulsion.fr



Phoenix Mecano-Group

Gross Sales

approx. 680.0 million EUR*

Employees

approx. 7.157 Employees*

PHOENIX MECANO GROUP LOCATIONS AROUND THE WORLD

*The numbers relate to 2019.

You can find current figures on our Website: www.phoenix-mecano.com



North | South America

USA:
Orlando, Florida
Springfield, Ohio
Shannon, Mississippi
Frederick, Maryland
Ontario, Kalifornien

Brasilien:
Barueri

Europe | Africa

Great Britain: Aylesbury

Spain: Zaragoza

France: Fontenay-sous-Bois

Benelux:
Deinze, Belgien
Al Ter Apel, Netherlands
Doetinchem, Netherlands
Enschede, Netherlands

Scandinavia:
Odense, Denmark
Ingelstad, Sweden

Germany:
Alsdorf, Baiersdorf, Bünde, Burscheid, Grävenwiesbach, Kirchlengern, Langenhagen, Minden, Muggensturm, Porta Westfalica, Salem-Neufrach, Stuttgart, Villingen-Schwenningen, Werne, Wendel, Wutha-Farnroda

Switzerland: Stein am Rhein

Czechia: Běhařovice

Tunesia:
Ben Arous, Borj-Cedria, Bouhejba-Zaghouan

Marocco: Tétouan

Italy: Inzago

Austria: Wien

Hungary: Kecskemét

Romania: Sibiu

Asien

Turkey: Ankara

Russia: Moskau

United Arab Emirates: Sharjah

India: Pune

Indonesia: Jakarta

Singapore: Singapore

People's Republic of China:
Dongguan, Kwun Tong (Hong Kong), Jiaxing, Shenzhen, Schanghai, Taicang

Taiwan: Taipei

Korea (South Korea):
Haeundae-gu, Busan

Vietnam: Ho Chi Minh Stadt

Australia

Australia: Victoria

L'IMPULSION Retrouvez nous sur www.limpulsion.fr



ptr-hartmann.com

Products
- » Product search with individual search criteria
- » Product data sheets with technical drawings
- » PDF generation
- » Test Probes - product configurator
- » Sample | Quotation order
- » PCB Terminal Blocks | PCB Multi-Connectors
- » Integrated Connection Technology
- » Interface Pin Blocks
- » Switches
- » Inductors
- » DIN RAIL Terminal Blocks
- » Test Probes

Know How
- » Background knowledge and more detailed information on our products

Downloads
- » Product catalogues
- » Certificates
- » Statements of conformity
- » Brochures | Flyers
- » Operation instructions | Check lists

Cross-Reference
- » Recoding of competitor article designations to PTR designations

Login Area
- » Premium service for registered customers
- » Download 3D-files

Contact
- » Your contacts worldwide



PTR HARTMANN WEBCODE

Our new catalogue contains a webcode for every product. The webcode consists of an asterisk followed by a combination of seven digits.

Webcode (Example) ***1804001**

To receive more information about the product you are interested in, go to our website and enter the webcode in the webcode search box.

L'IMPULSION
Retrouvez nous sur
www.limpulsion.fr

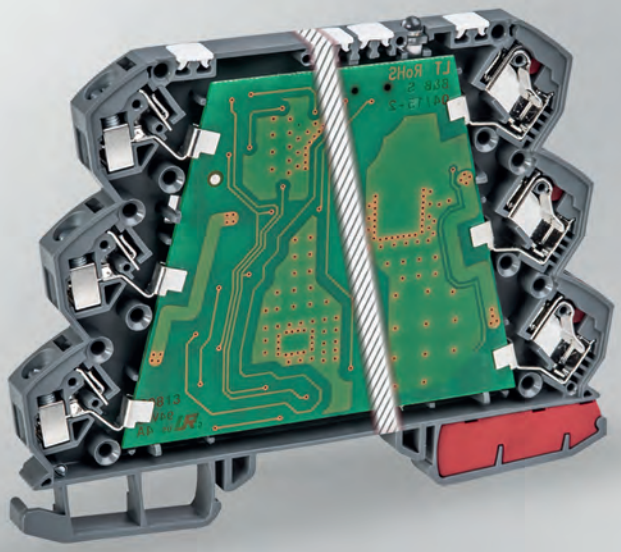





APPLICATION-ORIENTED
CONNECTION TECHNOLOGY

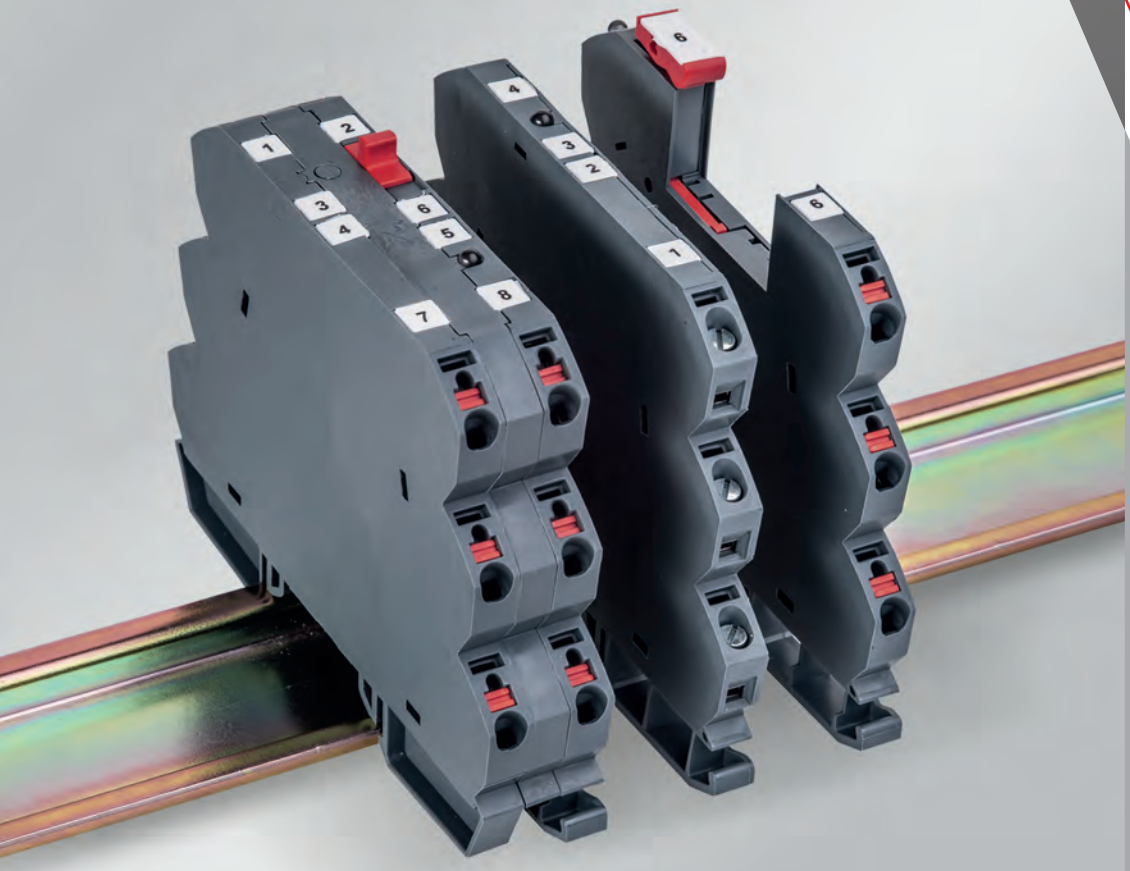

INTEGRATED CONNECTION TECHNOLOGY

The look of many assemblies and product lines is often determined by the shape and appearance of the included PCB terminal blocks' housing.

The newly-developed integrated connection technology is available in the screw and the time-saving Push-In technology. The fast and secure contact to the PCB is realized by easy push-on contact/clamps. This solder-free PCB contact removes the need for costly, errorprone soldering or an expensive soldering robot.

Such a highly functional and space-saving contact technology creates a standard solution for a very wide range of assemblies and enclosure designs.

On request, we can supply individual integrated connection technology solutions and interface technology, e.g. contacting technologies or specific electrical requirements.



LOW-COST MANUFACTURE

Take advantage of the savings which you can make by using integrated connection technology. These savings result not only from solder-free PCB contacting, but also from the increased flexibility in product design. This means that it is easy to create simpler PCB shapes. The result is that PCBs with simple geometric shapes help to reduce the milling costs, which increases utilisation.



LOW ELECTRICAL RESISTANCE

Other characteristics of the technology include low electrical contact resistance and the high level of mechanical reliability. This is because the conductor connection, PCB contacting and optional contacts, for example, an additional connection for an adjacent jumper, can be concentrated on a single metal part. This means that integrated connection technology satisfies a wide range of electrical requirements.

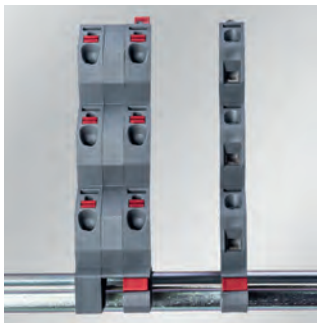

SPACE-SAVING

Above all when there is a shortage of space, integrated connection technology shows how much it offers: The integration of the technology in the customer's application makes it unnecessary to have a separate insulation material housing. The choice is yours. You can make use of the smaller consumed space to reduce the size of your application, or you can make greater use of the additional space. You benefit in both cases.



EXPANDED RANGE OF MATERIALS

It's your choice, and you can select the individual characteristics of the plastic materials needed for the application. These include laser-markable material, or requirements according to NFF 16-101/102, UL94 V0 or EN 60335.

L'IMPULSION | Retrouvez nous sur www.limpulsion.fr

INTEGRATED CONNECTION TECHNOLOGY

Solutions for Top-Hat Rail Housings: PTR IN-Series

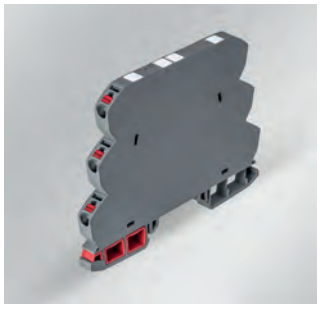

INS260

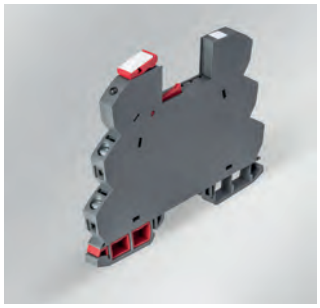

INS250



INM260

ADVANTAGES

- Height on TS35 mounting rail under 80 mm, allows use in field distributor boxes
- Tried-and-tested screw technology, time-saving push-in technology
- Clear equipment marking – up to 8 labelling fields
- Test openings under the centre labelling fields
- Uniform contours and continuous bridging using insulating jumper combs with all constructions and connection technologies
- Laser-markable plastic, conforms with UL94 V-0 and NFF 16 101/102 I2F2 requirements
- Snap-on foot on both sides, individually-mountable DIN rail coding, e.g. for use as an input / output system
- Optional housing openings for LED prisms, DIP and slide switches

INS260

- Overall width: 6.2 mm with up to 6 conductor connections
- Connection technology: Screw and push-in
- Multi-function housing: The function of the end device is only determined by the equipping of the installed PCB
- Areas of application: Industrial and building automation, signal converters, over-voltage protection

INS250

- Overall width: 6.2 mm with up to 6 conductor connections
- Connection technology: Screw and push-in
- Plug-in section for an interchangeable module for the exchange of wearing components such as relays or varistors
- Easy removal of the interchangeable module by means of an ejector

INM260

- Overall width: 17.5 mm with up to 12 conductor connections
- Connection technology: Screw and push-in
- Increased range of uses thanks to the fitting of 2 PCBs, e.g. in order to comply with EMC requirements by the physical separation of function unit and mains unit
- Use of components up to a height of 11.0 mm (if a PCB is used)

L'IMPULSION
Retrouvez nous sur
www.limpulsion.fr



Compact construction in connection with a laser-markable housing, a range of individual marking opportunities, plus a high level of compatibility with all modules and connection technologies: With its IN-Series, PTR HARTMANN offers complete top-hat rail housings which are equipped with integrated connection technology. The choice is between the INS250, INS260 and INM260 modules with overall widths of 6.2 mm and 17.5 mm, with up to 12 conductor connections using tried-and-tested screw technology and time-saving push-in technology.

L'IMPULSION Retrouvez nous sur www.limpulsion.fr

Your Benefits

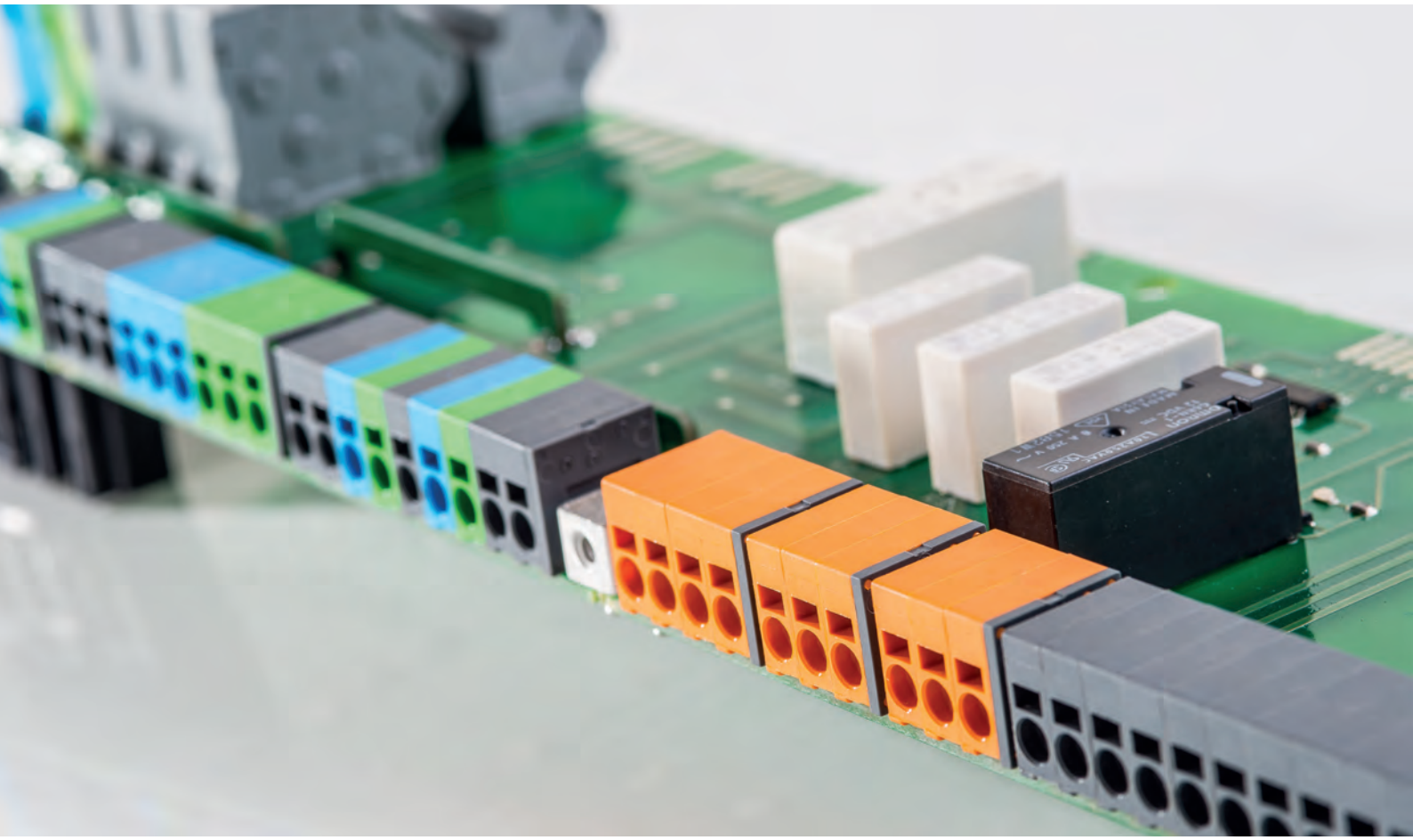

Quality and reliability are more important today than ever before. This is of utmost importance especially when it comes to terminal blocks and multiconnector systems. Ever-new directions must be met and strict international standards adhered to. Along with constant quality checks and delivery deadlines, PTR HARTMANN maintains excellent reliability, quality and service.

The focus is on the customer, who is not only offered a high-quality product but in addition tremendous value and service.

With an innovative R&D Department (specialising in custom-made products), a flexible production facility and a well-thought-out logistic process, PTR HARTMANN offers prompt service and cost-effective products. PTR HARTMANN offers a great package of value and service when it comes to PCB terminal blocks and PCB multi-connector. Customer-specific requests are welcome accepted and ulfilled using our in-house capabilities.

Customised Products

PCB terminal blocks, PCB multi-connectors and pin strips for special applications can be developed at PTR HARTMANN to meet the customer's requirements. Modifications of a standard housing or integration of an additional wire connection within the plastic housing are possible.

Partial Assembly / Irregular Spacing

Besides PCB terminal blocks and PCB multi-connectors with the standard spacing of 3.5 (3.81) mm, 4.0 mm, 5.0 (5.08) mm, 6.0 mm, 6.35 mm and 7.5 (7.62) mm, PTR HARTMANN delivers designs with double-spacing of 7.0 (7.62) mm, 10.0 (10.16) mm as well as 15.0 (15.24) mm or in any desired special design.

Cable Assembly / Bridge

PCB multi-connectors are delivered on request with the applicable preassembled cable. Other options such as external bridges can be offered with or without insulation as an accessory. If required, these can be fitted to the PCB terminal block and supplied as a single part.

Printed Circuit-Board Assembly

If PTR terminal blocks or headers are to be assembled on small printed circuit boards, PTR could take over the manufacturing of the complete device

Closed Clamp Area

Terminal blocks and connectors with the lift principle can be delivered on request with a closed clamp area either for a complete block or with an irregular pattern. This avoids incorrect connection to the poles.

Special Poles

PTR HARTMANN supplies terminal blocks as well as headers in many different varieties. Shorter or longer pins, gold-plated or partially old-plated contact pins and contact springs. Pins with different diameters or angled pins are available depending on the series!

Colour Variety

The PTR HARTMANN connection technologies products and connector systems are available in standard colours and also in a large choice of different colours. In this way, multi-coloured options can be offered and headers can be matched by colour to the applicable terminal blocks. PCB terminal blocks and PCB multi-connectors can be produced in almost any other colour (RAL).



Tape-on-Reel / Trays / Tubes

For printed circuit board assembly in automated processes, PTR HARTMANN can offer terminal blocks and headers on tape-on-reel, in trays or in tubes.
Dimensions and shapes are adapted to the assembly machine. On request the tapes / trays / tubes can be supplied in anti-static packaging for ESD protection. Terminal blocks and headers in tape-on-reel or tray packing will be delivered with pick & place pad where needed.

Printing

Connection technologies products can be marked by different methods. PTR HARTMANN offers its customers two kinds of printing: Ink-jet printing, the cost-effective, fast and flexible solution to print letters or individual characters and tampon printing. The Tampon print guarantees the best quality and definition? A variety of letters and characters are possible – even on corners and round surfaces. Both types of printing are wipe-proof; the tampon-printing method is also resistant to isopropyl alcohol. Specific products can also be labeled using a laser.

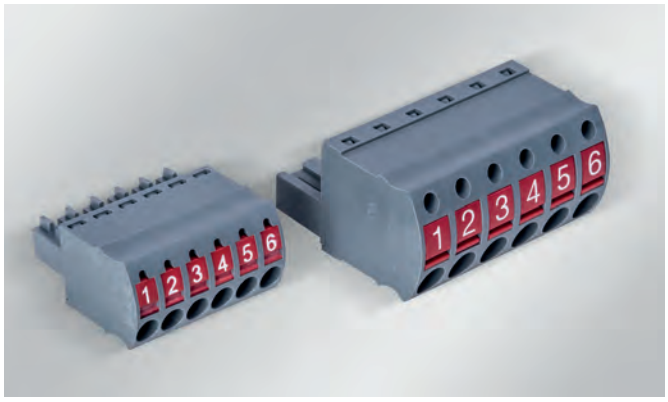

L'IMPULSION Retrouvez nous sur www.limpulsion.fr

Clamp Types



The Wire Guard Type

In this design, PTR HARTMANN screw PCB terminal blocks make use of stainless steel wire protection which protects the connected wire. The solder pin and clamp body form a single unit, and this guarantees low transition resistance and minimal voltage loss. This configuration allows for (a) a versatile and low-cost solution for PCB terminal blocks whose terminal clamps are rarely removed; and (b) the use of both solid and stranded conductors with and without ferrules. Applications include building automation, safety technology, and telecommunication.

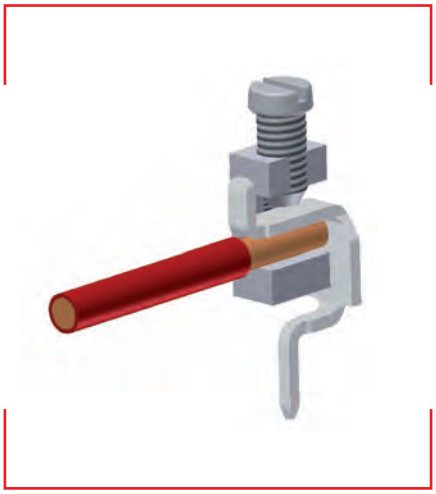

The Lift Type

The most popular and proven technology for connections which must often be removed consists of PCB terminal blocks with a lift design which allows the clamp to move parallel to the solder tag during the screwing process. This ensures that it is easy to detach and restore the electrical contact. It also ensures secure fastening in the clamping area of solid or stranded conductors with a wide range of wire sizes. The wire is clamped between the clamp and the solder tag, so even the smallest wires fit tightly in the connection area. The lateral grooves in the connection area provide excellent tear strength and ensure penetration of the wire's oxidation layer when the screw is tightened. This creates a secure, gas-tight electrical connection. This connection mechanism is used for industrial applications when it is necessary to connect and disconnect conductors frequently, but at the same time to ensure a reliable electrical contact.

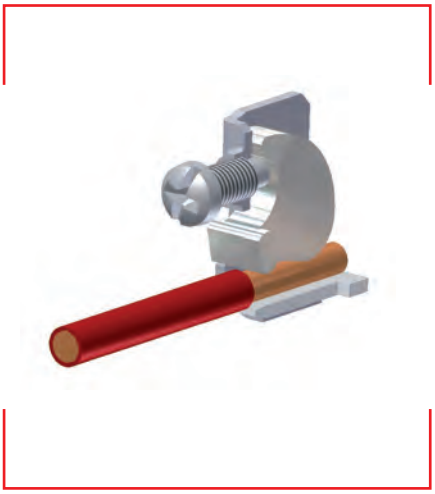

The Excenter Type

The excenter design results in space-saving products in which the wire and screw are positioned on the same side of the component. The excenter type is used to mount PCB terminal blocks in flush device elements, for example circuit board inserts.



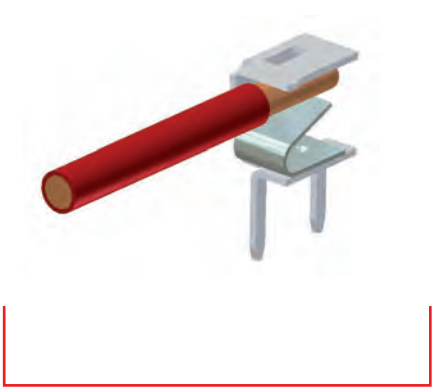



The Tension Spring Type

The tension spring design allows the user to connect and disconnect wires by opening the spring with a screwdriver or operating lever – there is no time-consuming rotation of a screw or need for a special tool. The tension spring type is very useful in difficult operating conditions, for example where there is a risk of vibration, impact, shock or extreme temperature fluctuations. The spring compensates for the stress-dependent and thermal compression / flow performance of the wires, and this ensures a gas-tight and maintenance-free electrical connection. This dynamic clamp connection system creates a reliable contact, protects the connection against vibration, and is becoming more and more popular in industrial and traffic technology applications.

The Push-In Type

The push-in design offers the fastest connection method. It is ideal for use with solid and stranded wires with ferrules, and allows the user to make connections by direct insertion of the wire without using a tool or pressing a lever. A screwdriver or operating lever is necessary only to open the spring during the insertion or removal of stranded wires. The simple structure of PCB terminal blocks creates a compact design. The data and telecommunication industries often use this time-saving connection technology.

The Insulation-Displacement Contact Principle

Connection of conductors is quicker using insulation-displacement contacts than using Push-In solutions . It is then no longer necessary to strip the insulation from the conductors, but instead simply to insert and press them directly into the conductor entry without any preliminary treatment. Tiny knife-like insulation-displacement contacts then penetrate through the outer insulation of the conductor – consisting normally of PVC or PE – thus making contact with the internal stranded copper wire(s) without damaging them. Both PCB terminal blocks and connectors utilising insulation-displacement contact technology are usually designed, for use on PCBs, for small conductors, since these are predominantly used in signal transmission. The conductors can be multiply reused, it is necessary only to remove the previously used length of conductor in advance.

L'IMPULSION
Retrouvez nous sur
www.limpulsion.fr

Automated Assembly of PCBs



Automation now plays an important part in circuit board manufacture. In this process, an automatic assembly machine positions components on the circuit board and then solders them fully automatically.

A handling system removes the component from its packaging, determines its position, and then calculates the travel that is necessary for exact positioning of the component on the circuit board. When a circuit board has been assembled, it moves to the next station.
Circuit-board component packaging must ensure component protection, storage and transport. It must also allow the component to be placed in a precisely-defined position.

There are various types of suitable packaging, including

- Tape-on-Reel
- Trays
- Tubes

Tape-on-Reel

For tape-on-reel packaging, the components are packed in pockets sealed with protective foil. This type of packaging is available in various widths, pocket depths and material strengths in accordance with **EN 60286-3**. In addition to standard tape-on-reel, customized products are also available, as shown in the picture. A conductive material is generally used in order to prevent electrostatic discharge. The tapes are wound on reels which are inserted directly into the placement machine feeder.

Tubes

Tubes are another type of component packaging used for automatic assembly processes. Tube shapes are designed to give the component the best possible protection during shipping and storage. At the same time, the tube shapes ensure correct positioning of the component for automatic assembly. Tubes are also available in a conductive material.

Trays

Other placement machines use palleting systems with stacked trays which supply the components. This provides a sufficiently large quantity of components so that the placement machine can operate without supervision. The tray shape enables the target component to be correctly positioned on the tray, and the handling system can then remove it. Trays are generally made of conductive material which prevents electrostatic discharge.



Tape-on-Reel



Tubes



Trays

L'IMPULSION Retrouvez nous sur www.limpulsion.fr

Soldering

Wave or reflow soldering is used for the fully-automatic or semi-automatic soldering of components to circuit boards and flat modules.

In wave soldering, after the circuit board has been assembled, it is heated and then passed over a solder wave. In this process, hot fluid solder is pumped through a gap (chip and delta wave) or, for example, through holes in a perforated plate (Wörthmann wave). The component's solder pins take up the solder, which results in a perfect solder connection after the solder has cooled.

In reflow soldering, soldering paste is applied under pressure to the circuit board. As the applied solder has adhesive properties, the circuit board can be assembled without any further fixation, and can then pass through the furnace. After a pre-heating phase, the solder is heated to fusion temperature during the soldering phase. At this temperature, the solder becomes liquid, and this creates a bond between the component and circuit board. The result is a fault-free solder connection after the solder has cooled.

As a rule of thumb for solderable PTR HARTMANN PCB terminal blocks and pin strips a PCB hole diameter should be used which is 0.3 mm larger than the pin diameter from the soldered component.

As preferred the information of the respective product page is valid. A solder pad has to have a minimum ring thickness of 0.2 mm to ensure a correct shaped soldering cone and therefore a good soldering joint.

The soldering process consists of the following four main phases

1. Preparation

In the wave soldering process, first the components are mounted on the circuit board. In reflow soldering, by contrast, first the soldering paste is applied, and then the components are mounted.

2. Preheating

During this phase, the assembled circuit boards are brought to a preheat temperature – there are different processes for this purpose. The preheating method prevents deformation of the circuit board or its components and other damage.

3. Soldering

In wave soldering, the preheated circuit board passes over a solder wave. In reflow soldering, the entire circuit board is heated to the soldering temperature. The soldering time must be carefully selected to ensure that there is no damage to the circuit board or its heat-sensitive components.

4. Cooling

The circuit board components should be cooled under supervision immediately after soldering. This minimises thermal stress on the circuit board and its components.
On the right there are examples of soldering temperature profiles for various soldering processes used with through-hole products, based on **EN 61760-1** for SMD products.

The actual soldering process depends on various factors, including PCB design, solder paste used, number, type and size of the components used. This means that the profiles illustrated can only be seen as recommendations.

It is not possible to make generally binding statements about the various processes, PCBs and components. Any decision about the profile which ensures your best soldering result must be taken on a case-by-case basis. The aim is to carry out work at the lower maximum load for the components used, so in general the maximum temperatures used are lower than those shown in the soldering profiles on the right.

Soldering Profile to EN 61760-1

REFLOW SOLDERING PROFILE

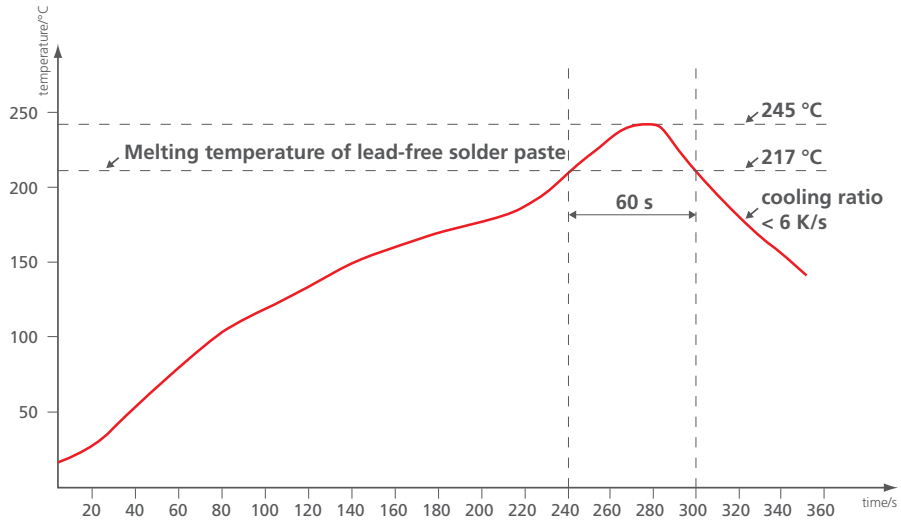

WAVE SOLDERING PROFIL SINGLE WAVE

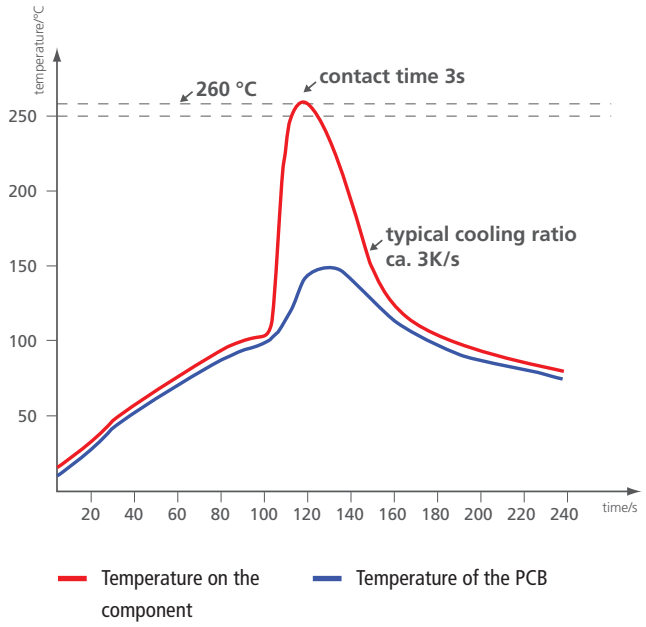

WAVE SOLDERING PROFIL DOUBLE WAVE

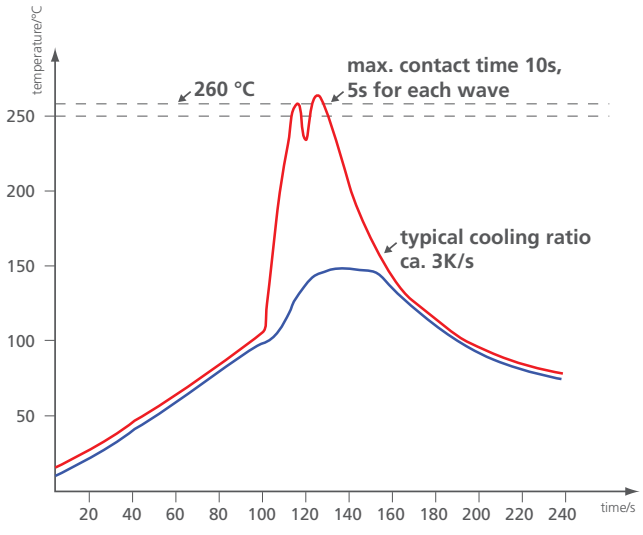

L'IMPULSION Retrouvez nous sur www.limpulsion.fr

Marking Processes



PTR uses both inkjet and tampon printers.
Inkjet printing is a rapid and flexible process, but the contour accuracy is inferior. Inkjet printing is easy to use and offers low-cost manufacturing.

Tampon printing is more expensive, but contour accuracy is much better. The two-component ink system also provides better scratch and wipe resistance.

When permanent marking is especially important, laser marking is a realistic alternative.



Inkjet Printing

Inkjet printers are matrix printers which use a targeted spray of ink droplets to create a printed image. Alternatively, they guide the spray electrically. This allows the individual droplets to create an image from many dots. Normally the user can easily and quickly adapt the image and print out letters, numbers and special characters.



Tampon Printing

Tampon printing is an indirect printing process. The user creates an image-specific printing block to which he applies the ink. A tampon transfers the ink to the terminal block. This process provides highly accurate contours. Individually-manufactured printing blocks make it possible to print letters, numbers and special characters.



Laser Marking

Marking with a laser beam results in a permanent change to the plastic. The change in colour generated by the laser represents a scratch-proof, indelible and extremely long-lasting method of marking. The high levels of contour accuracy and contrast are achieved by the use of plastic which are designed specifically for laser marking. Many of the plastics used by PTR HARTMANN are suitable for laser marking.

Article Designation

STL1550 / 6 (G) - 3.5 - (V) - (P2.6) - B - BK - (HT)
1 2 3 4 5 6 7 8 9

1 Series Name

AK/ STL metric version
AKZ/ STLZ inch version

2 Number of Poles

3

CC with coding cover
DS with wire guard
F with flange
FD with finger release
FN with flange noses
FR with (screwless) flange with rocker
G with side walls, enclosed housing
GMB assembly block version
KD with screw lever
L with pull relief
LG with locking guides
LGB with locking guides, bottom
SE with separating element(s)
VP with alternating pins
WD with angle lever

4 Spacing (mm)

5

H solderable PCB terminal blocks: horizontal screw-in direction
Pin Strips: horizontal plug-in direction of pluggable PCB terminal block
V solderable PCB terminal blocks: vertical screw-in direction
Pin Strips: vertical plug-in direction of pluggable PCB terminal block
OL orthogonal design, pins point left
OR orthogonal design, pins point right

6

PX.X pin length, solder side
PTX.X pin length total

7 with Printing

according to customer drawing (BV)

8 Housing Colour

in full name for example: GREEN
or (on the basis of DIN IEC 60757)
short for example: GN

9

AU gold-plated contacts
BL solid block
BR with internal bridging
CP with coding pin(s)
FP with fixing pin(s)
HC high-current version
HT reflow enabled
INV inverted mating face
PD pin distance from front row to back row
SMD surface mounted device

L'IMPULSION Retrouvez nous sur www.limpulsion.fr

PCB TERMINAL BLOCKS

PCB terminal blocks are divided into two groups - screw terminal blocks and spring terminal blocks.

Three connection types are available for the screw terminal blocks: the wire guard, the lift, and the excenter type.

Normally, screw terminal blocks are manufactured either as modular constructions, as two-pole and three-pole terminals, and can be flexibly connected to each other to make larger terminals by means of the so-called dovetail connection. Individual series are also available in blocks. Screw terminal blocks using the different connection designs are available with spacing from 2.54 mm to 15.24 mm, metric or inch, and in various colours.

The group of spring terminal blocks is divided into PCB terminal blocks using the push-in design (leg spring technology) and the tension spring design. Spring terminal blocks are normally manufactured in layers which can be combined to create the required number of poles. In addition, different colours can be combined within a terminal block.

Spring terminal blocks using both connection types are available with spacing from 2.5 mm to 11.5 mm, metric or inches.

L'IMPULSION | Retrouvez nous sur www.limpulsion.fr

PCB TERMINAL BLOCKS	CLAMP TYPE	PAGE
Screw Terminal Blocks	Wire Guard Type	32
	Lift Type	63
	Excenter Type	103
Spring Terminal Blocks	Push-In Type	109
	Tension Spring Type	149

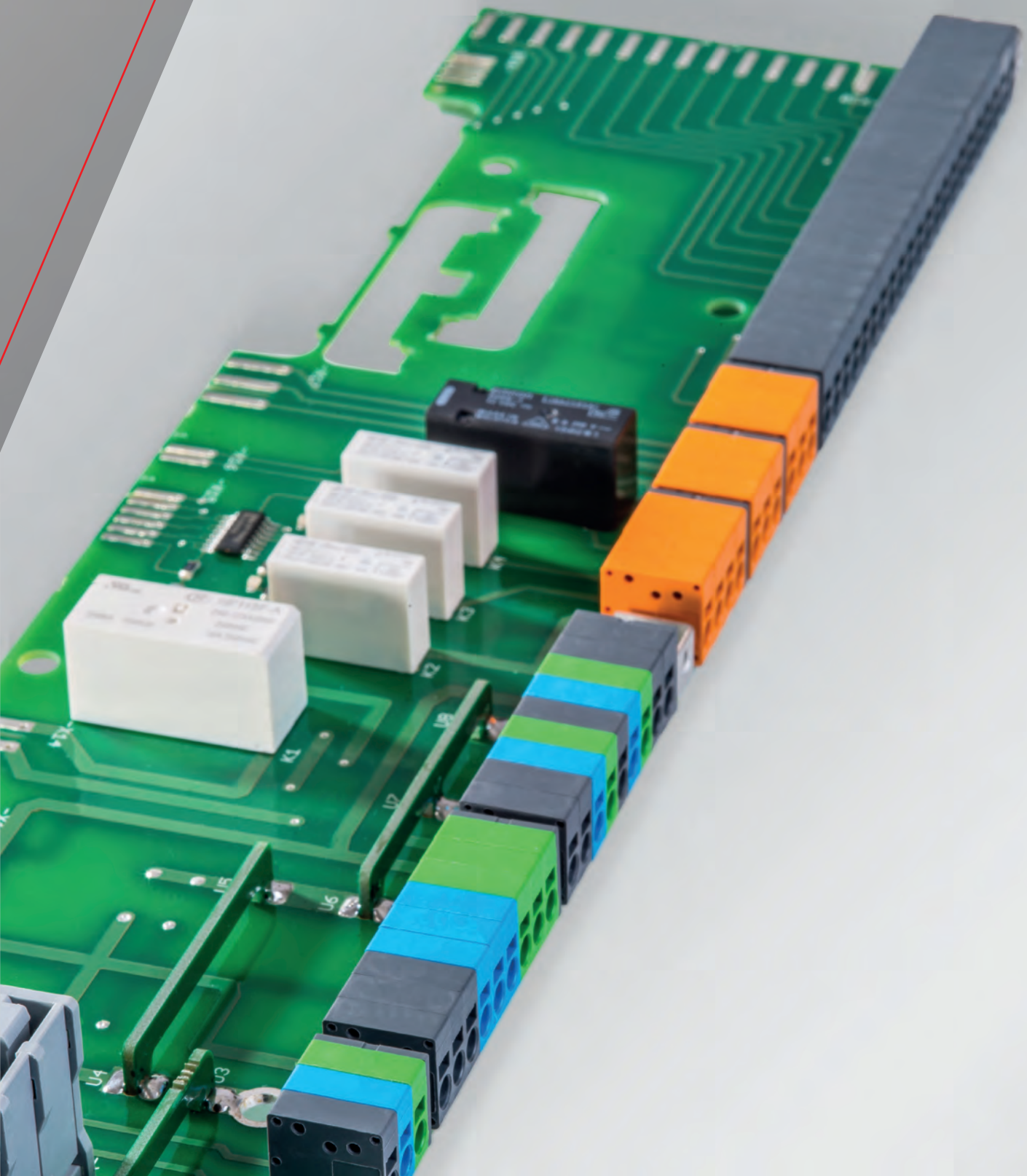

L'IMPULSION
Retrouvez nous sur
www.limpulsion.fr

AK550/..DS-3.5-V-GREY

Spacing 3.5 mm



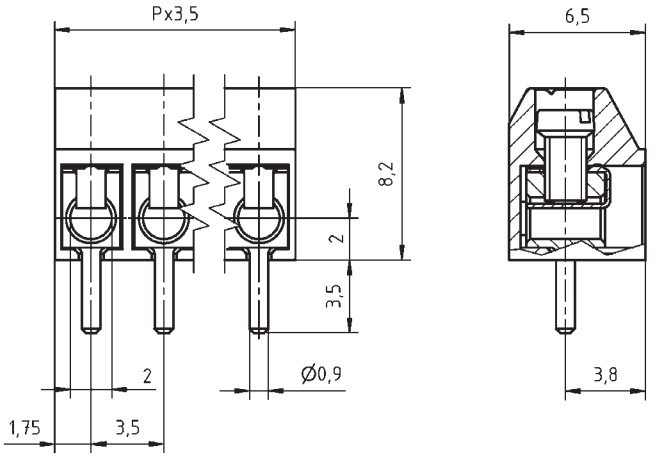

WIRE SIZES	
solid min	0.08 mm²
solid max	1.5 mm²
stranded min	0.08 mm²
stranded max	1.0 mm²
stranded with ferrule min	0.14 mm²
stranded with ferrule max	0.5 mm²
DIMENSIONS	
Stripped Length	5.5 mm
PCB Hole Diameter	1.2 mm
MATERIALS	
Clamp	Brass
Wire Guard	Stainless Steel
Screw	Steel
INSULATING MATERIAL	
Material	PA 6.6
Flammability Class	UL 94 V-0
TEMPERATURES	
Operating Temperature (without mech. load)	-40 °C - 105 °C
WAVE SOLDERING PROCESS	
Soldering Temperature, recommended	260 °C
Peak Soldering Time, recommended	3-4 s
REFLOW PROCESS	
Soldering Temperature, recommended	-
Peak Soldering Time, recommended	-

COLOURS[1]

GREY, RAL 7016	PEBBLE GREY, RAL 7032
GREEN, RAL 6018	LIGHT GREEN, similar RAL 6018

ACCESSORIES

	Description	Article Number
	Bridge, 2-pole, insulated, BRI/2-7.0/7.62-L7.5-LIGHT GREY	50000000018
	Bridge, 2-pole, angled, BR/2-3.5/3.81-H-L7.5	50000000029
	Bridge, 2-pole, BR/2-3.5/3.81-L7.5	50000000015
	Bridge, 3-pole, BR/3-3.5/3.81-L7.5	50000000016

ORDER DATA (SPACING 3.5 MM)

Poles	Width (mm)	Article Designation	Article Number	PU
2	7.00	AK550/2DS-3.5-V-GREY	50550020121G	250
3	10.50	AK550/3DS-3.5-V-GREY	50550030121G	250
4	14.00	AK550/4DS-3.5-V-GREY	50550040121G	250
5	17.50	AK550/5DS-3.5-V-GREY	50550050121G	250
6	21.00	AK550/6DS-3.5-V-GREY	50550060121G	250
7	24.50	AK550/7DS-3.5-V-GREY	50550070121G	250
8	28.00	AK550/8DS-3.5-V-GREY	50550080121E	100
9	31.50	AK550/9DS-3.5-V-GREY	50550090121E	100
10	35.00	AK550/10DS-3.5-V-GREY	50550100121D	50
11	38.50	AK550/11DS-3.5-V-GREY	50550110121D	50
12	42.00	AK550/12DS-3.5-V-GREY	50550120121D	50
13	45.50	AK550/13DS-3.5-V-GREY	50550130121D	50
14	49.00	AK550/14DS-3.5-V-GREY	50550140121D	50
15	52.50	AK550/15DS-3.5-V-GREY	50550150121D	50
16	56.00	AK550/16DS-3.5-V-GREY	50550160121D	50

RATINGS

Usegroup	B	C	D		
Rated Voltage	125 V	-	-	130 V	
Rated Current	6 A	-	-	13.5 A	
Rated Wire Size				min	max
solid	AWG 28-16	-	-	0.5 mm²	1.0 mm²
stranded	AWG 28-16	-	-	0.5 mm²	1.0 mm²
Torque (in.lbs)	2.21	-	-	1.77	
Screw Size	M2	-	-	M2	
Test Voltage	1.2 kV	-	-	1.25 kV	

[1]Colours according to RAL, there may be variations on colour due to production conditions. Special colours on request.

Spacing 3.5 mm

AK550/..DS-3.5-H-GREY

WIRE SIZES	
solid min	0.08 mm²
solid max	1.5 mm²
stranded min	0.08 mm²
stranded max	1.0 mm²
stranded with ferrule min	0.14 mm²
stranded with ferrule max	0.5 mm²
DIMENSIONS	
Stripped Length	5.5 mm
PCB Hole Diameter	1.2 mm
MATERIALS	
Clamp	Brass
Wire Guard	Stainless Steel
Screw	Steel
INSULATING MATERIAL	
Material	PA 6.6
Flammability Class	UL 94 V-0
TEMPERATURES	
Operating Temperature (without mech. load)	-40 °C - 105 °C
WAVE SOLDERING PROCESS	
Soldering Temperature, recommended	260 °C
Peak Soldering Time, recommended	3-4 s
REFLOW PROCESS	
Soldering Temperature, recommended	-
Peak Soldering Time, recommended	-



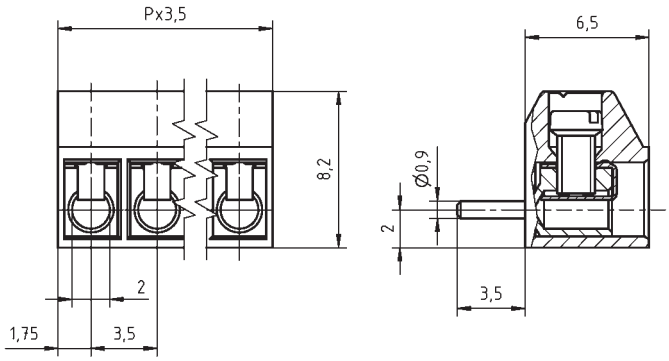

COLOURS[1]

GREY, RAL 7016		GREEN, RAL 6018	
LIGHT GREEN, similar RAL 6018			

ORDER DATA (SPACING 3.5 MM)

Poles	Width (mm)	Article Designation	Article Number	PU
2	7.00	AK550/2DS-3.5-H-GREY	50550020171G	250
3	10.50	AK550/3DS-3.5-H-GREY	50550030171G	250
4	14.00	AK550/4DS-3.5-H-GREY	50550040171G	250
5	17.50	AK550/5DS-3.5-H-GREY	50550050171G	250
6	21.00	AK550/6DS-3.5-H-GREY	50550060171G	250
7	24.50	AK550/7DS-3.5-H-GREY	50550070171G	250
8	28.00	AK550/8DS-3.5-H-GREY	50550080171E	100
9	31.50	AK550/9DS-3.5-H-GREY	50550090171E	100
10	35.00	AK550/10DS-3.5-H-GREY	50550100171D	50
11	38.50	AK550/11DS-3.5-H-GREY	50550110171D	50
12	42.00	AK550/12DS-3.5-H-GREY	50550120171D	50
13	45.50	AK550/13DS-3.5-H-GREY	50550130171D	50
14	49.00	AK550/14DS-3.5-H-GREY	50550140171D	50
15	52.50	AK550/15DS-3.5-H-GREY	50550150171D	50
16	56.00	AK550/16DS-3.5-H-GREY	50550160171D	50

ACCESSORIES

	Description	Article Number
	Bridge, 2-pole, insulated, BRI/2-7.0/7.62-L7.5-LIGHT GREY	50000000018
	Bridge, 2-pole, angled, BR/2-3.5/3.81-H-L7.5	50000000029
	Bridge, 2-pole, BR/2-3.5/3.81-L7.5	50000000015
	Bridge, 3-pole, BR/3-3.5/3.81-L7.5	50000000016

RATINGS

	c UL us			VDE	
Usegroup	B	C	D		
Rated Voltage	125 V	-	-	130 V	
Rated Current	6 A	-	-	13.5 A	
Rated Wire Size				min	max
solid	AWG 28-16	-	-	0.5 mm²	1.0 mm²
stranded	AWG 28-16	-	-	0.5 mm²	1.0 mm²
Torque (in.lbs)	2.21	-	-	1.77	
Screw Size	M2	-	-	M2	
Test Voltage	1.2 kV	-	-	1.25 kV	

[1]Colours according to RAL, there may be variations on colour due to production conditions. Special colours on request.

L'IMPULSION
Retrouvez nous sur
www.limpulsion.fr

AK100/..DS-5.0-V-GREY

Spacing 5.0 mm



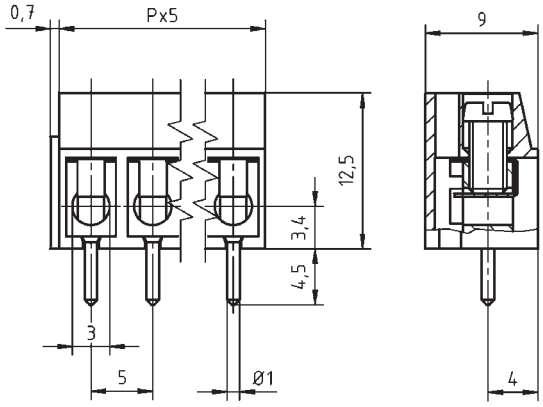

WIRE SIZES	
solid min	0.2 mm²
solid max	2.5 mm²
stranded min	0.2 mm²
stranded max	2.5 mm²
stranded with ferrule min	0.2 mm²
stranded with ferrule max	2.5 mm²
DIMENSIONS	
Stripped Length	7.0 mm
PCB Hole Diameter	1.3 mm
MATERIALS	
Clamp	Brass
Wire Guard	Stainless Steel
Screw	Steel
INSULATING MATERIAL	
Material	PA 6.6
Flammability Class	UL 94 V-0
TEMPERATURES	
Operating Temperature (without mech. load)	-40 °C - 105 °C
WAVE SOLDERING PROCESS	
Soldering Temperature, recommended	260 °C
Peak Soldering Time, recommended	3-4 s
REFLOW PROCESS	
Soldering Temperature, recommended	-
Peak Soldering Time, recommended	-

COLOURS[1]

GREY, RAL 7016 — BLACK, RAL 9011

BLUE, RAL 5015

ACCESSORIES

	Description	Article Number
	Bridge, 2-pole, insulated, BRI/2-5.0/5.08-LIGHT GREY	50000000006
	Bridge, 3-pole, insulated, BRI/3-5.0/5.08-LIGHT GREY	50000000007
	Bridge, 2-pole, BR/2-5.0/5.08-L7.0	50000000008

ORDER DATA (SPACING 5.0 MM)

Poles	Width (mm)	Article Designation	Article Number	PU
2	10.70	AK100/2DS-5.0-V-GREY	50100020121G	250
3	15.70	AK100/3DS-5.0-V-GREY	50100030121G	250
4	20.70	AK100/4DS-5.0-V-GREY	50100040121G	250
5	25.70	AK100/5DS-5.0-V-GREY	50100050121G	250
6	30.70	AK100/6DS-5.0-V-GREY	50100060121F	200
7	35.70	AK100/7DS-5.0-V-GREY	50100070121F	200
8	40.70	AK100/8DS-5.0-V-GREY	50100080121E	100
9	45.70	AK100/9DS-5.0-V-GREY	50100090121E	100
10	50.70	AK100/10DS-5.0-V-GREY	50100100121E	100
11	55.70	AK100/11DS-5.0-V-GREY	50100110121E	100
12	60.70	AK100/12DS-5.0-V-GREY	50100120121E	100

RATINGS

	B	C	D		
Usegroup					
Rated Voltage	300 V	-	300 V	250 V	
Rated Current	20 A	-	10 A	24 A	
Rated Wire Size				min	max
solid	AWG 22-12	-	AWG 22-12	0.5 mm²	2.5 mm²
stranded	AWG 22-12	-	AWG 22-12	0.5 mm²	2.5 mm²
Torque (in.lbs)	3.98	-	3.98	4.43	
Screw Size	M3	-	M3	M3	
Test Voltage	1.6 kV	-	1.6 kV	2.0 kV	

[1]Colours according to RAL, there may be variations on colour due to production conditions. Special colours on request.

Spacing 5.08 mm

AKZ120/..DS-5.08-V-GREY

WIRE SIZES	
solid min	0.2 mm²
solid max	2.5 mm²
stranded min	0.2 mm²
stranded max	2.5 mm²
stranded with ferrule min	0.2 mm²
stranded with ferrule max	2.5 mm²
DIMENSIONS	
Stripped Length	7.0 mm
PCB Hole Diameter	1.3 mm
MATERIALS	
Clamp	Brass
Wire Guard	Stainless Steel
Screw	Steel
INSULATING MATERIAL	
Material	PA 6.6
Flammability Class	UL 94 V-0
TEMPERATURES	
Operating Temperature (without mech. load)	-40 °C - 105 °C
WAVE SOLDERING PROCESS	
Soldering Temperature, recommended	260 °C
Peak Soldering Time, recommended	3-4 s
REFLOW PROCESS	
Soldering Temperature, recommended	-
Peak Soldering Time, recommended	-



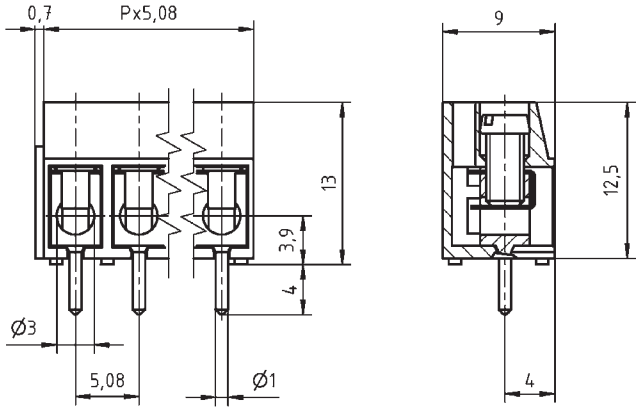

COLOURS[1]

GREY, RAL 7016		BLACK, RAL 9011	
BLUE, RAL 5015			

ORDER DATA (SPACING 5.08 MM)

Poles	Width (mm)	Article Designation	Article Number	PU
2	10.86	AKZ120/2DS-5.08-V-GREY	50120020110G	250
3	15.94	AKZ120/3DS-5.08-V-GREY	50120030110G	250
4	21.02	AKZ120/4DS-5.08-V-GREY	50120040110G	250
5	26.10	AKZ120/5DS-5.08-V-GREY	50120050110G	250
6	31.18	AKZ120/6DS-5.08-V-GREY	50120060110F	200
7	36.26	AKZ120/7DS-5.08-V-GREY	50120070110F	200
8	41.34	AKZ120/8DS-5.08-V-GREY	50120080110E	100
9	46.42	AKZ120/9DS-5.08-V-GREY	50120090110E	100
10	51.50	AKZ120/10DS-5.08-V-GREY	50120100110E	100
11	56.58	AKZ120/11DS-5.08-V-GREY	50120110110E	100
12	61.66	AKZ120/12DS-5.08-V-GREY	50120120110E	100

ACCESSORIES

	Description	Article Number
	Bridge, 2-pole, insulated, BRI/2-5.0/5.08-LIGHT GREY	50000000006
	Bridge, 3-pole, insulated, BRI/3-5.0/5.08-LIGHT GREY	50000000007
	Bridge, 2-pole, BR/2-5.0/5.08-L7.0	50000000008

RATINGS

	cULus			VDE	
Usegroup	B	C	D		
Rated Voltage	300 V	-	300 V	250 V	
Rated Current	20 A	-	10 A	24 A	
Rated Wire Size				min	max
solid	AWG 22-12	-	AWG 22-12	0.5 mm²	2.5 mm²
stranded	AWG 22-12	-	AWG 22-12	0.5 mm²	2.5 mm²
Torque (in.lbs)	3.98	-	3.98	4.43	
Screw Size	M3	-	M3	M3	
Test Voltage	1.6 kV	-	1.6 kV	2.0 kV	

[1]Colours according to RAL, there may be variations on colour due to production conditions. Special colours on request.

L'IMPULSION
Retrouvez nous sur
www.limpulsion.fr

AK100/..DS-5.0-V-GREY-BL

Spacing 5.0 mm



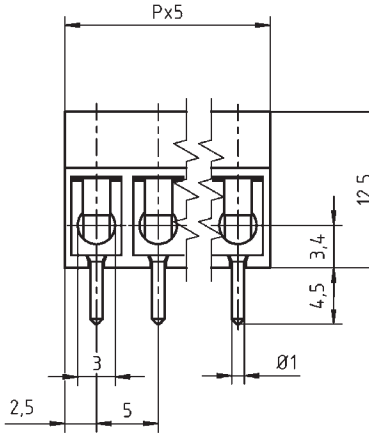

WIRE SIZES	
solid min	0.2 mm²
solid max	2.5 mm²
stranded min	0.2 mm²
stranded max	2.5 mm²
stranded with ferrule min	0.2 mm²
stranded with ferrule max	2.5 mm²
DIMENSIONS	
Stripped Length	7.0 mm
PCB Hole Diameter	1.3 mm
MATERIALS	
Clamp	Brass
Wire Guard	Stainless Steel
Screw	Steel
INSULATING MATERIAL	
Material	PA 6.6
Flammability Class	UL 94 V-0
TEMPERATURES	
Operating Temperature (without mech. load)	-40 °C - 105 °C
WAVE SOLDERING PROCESS	
Soldering Temperature, recommended	260 °C
Peak Soldering Time, recommended	3-4 s
REFLOW PROCESS	
Soldering Temperature, recommended	-
Peak Soldering Time, recommended	-

COLOURS[1]	
	GREY, RAL 7016

ACCESSORIES

	Description	Article Number
	Bridge, 2-pole, insulated, BRI/2-5.0/5.08-LIGHT GREY	50000000006
	Bridge, 3-pole, insulated, BRI/3-5.0/5.08-LIGHT GREY	50000000007
	Bridge, 2-pole, BR/2-5.0/5.08-L7.0	50000000008

ORDER DATA (SPACING 5.0 MM)

Poles	Width (mm)	Article Designation	Article Number	PU
2	10.00	AK100/2DS-5.0-V-GREY-BL	50100022121G	250
3	15.00	AK100/3DS-5.0-V-GREY-BL	50100032121G	250
4	20.00	AK100/4DS-5.0-V-GREY-BL	50100042121G	250
5	25.00	AK100/5DS-5.0-V-GREY-BL	50100052121G	250
6	30.00	AK100/6DS-5.0-V-GREY-BL	50100062121F	200
7	35.00	AK100/7DS-5.0-V-GREY-BL	50100072121F	200
8	40.00	AK100/8DS-5.0-V-GREY-BL	50100082121E	100
9	45.00	AK100/9DS-5.0-V-GREY-BL	50100092121E	100
10	50.00	AK100/10DS-5.0-V-GREY-BL	50100102121E	100
11	55.00	AK100/11DS-5.0-V-GREY-BL	50100112121E	100
12	60.00	AK100/12DS-5.0-V-GREY-BL	50100122121E	100

RATINGS

Usegroup	B	C	D		
Rated Voltage	300 V	-	300 V	250 V	
Rated Current	20 A	-	10 A	24 A	
Rated Wire Size				min	max
solid	AWG 22-12	-	AWG 22-12	0.5 mm²	2.5 mm²
stranded	AWG 22-12	-	AWG 22-12	0.5 mm²	2.5 mm²
Torque (in.lbs)	3.98	-	3.98	4.43	
Screw Size	M3	-	M3	M3	
Test Voltage	1.6 kV	-	1.6 kV	2.0 kV	

[1]Colours according to RAL, there may be variations on colour due to production conditions. Special colours on request.

Spacing 5.0 mm

AK100/..DS-5.0-H-GREY

WIRE SIZES	
solid min	0.2 mm²
solid max	2.5 mm²
stranded min	0.2 mm²
stranded max	2.5 mm²
stranded with ferrule min	0.2 mm²
stranded with ferrule max	2.5 mm²
DIMENSIONS	
Stripped Length	6.0 mm
PCB Hole Diameter	1.3 mm
MATERIALS	
Clamp	Brass
Wire Guard	Stainless Steel
Screw	Steel
INSULATING MATERIAL	
Material	PA 6.6
Flammability Class	UL 94 V-0
TEMPERATURES	
Operating Temperature (without mech. load)	-40 °C - 105 °C
WAVE SOLDERING PROCESS	
Soldering Temperature, recommended	260 °C
Peak Soldering Time, recommended	3-4 s
REFLOW PROCESS	
Soldering Temperature, recommended	-
Peak Soldering Time, recommended	-



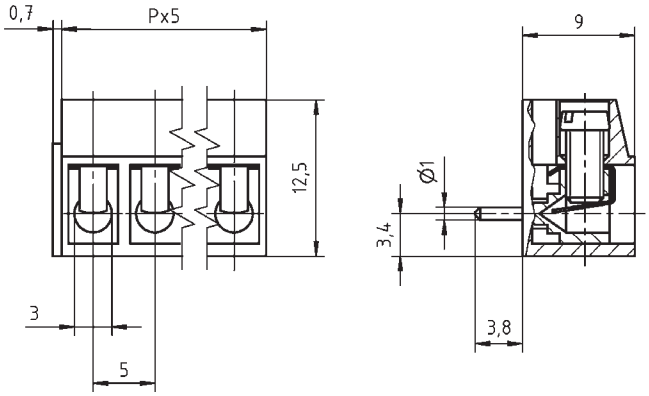

COLOURS[1]

GREY, RAL 7016 — BLUE, RAL 5015

ORDER DATA (SPACING 5.0 MM)

Poles	Width (mm)	Article Designation	Article Number	PU
2	10.70	AK100/2DS-5.0-H-GREY	50100020150G	250
3	15.70	AK100/3DS-5.0-H-GREY	50100030150G	250
4	20.70	AK100/4DS-5.0-H-GREY	50100040150G	250
5	25.70	AK100/5DS-5.0-H-GREY	50100050150G	250
6	30.70	AK100/6DS-5.0-H-GREY	50100060150F	200
7	35.70	AK100/7DS-5.0-H-GREY	50100070150F	200
8	40.70	AK100/8DS-5.0-H-GREY	50100080150E	100
9	45.70	AK100/9DS-5.0-H-GREY	50100090150E	100
10	50.70	AK100/10DS-5.0-H-GREY	50100100150E	100
11	55.70	AK100/11DS-5.0-H-GREY	50100110150E	100
12	60.70	AK100/12DS-5.0-H-GREY	50100120150E	100

ACCESSORIES

	Description	Article Number
	Bridge, 2-pole, insulated, BRI/2-5.0/5.08-LIGHT GREY	50000000006
	Bridge, 3-pole, insulated, BRI/3-5.0/5.08-LIGHT GREY	50000000007
	Bridge, 2-pole, BR/2-5.0/5.08-L7.0	50000000008

RATINGS

	B	C	D		
Usegroup					
Rated Voltage	300 V	-	300 V	250 V	
Rated Current	20 A	-	10 A	24 A	
Rated Wire Size				min	max
solid	AWG 22-12	-	AWG 22-12	0.5 mm²	2.5 mm²
stranded	AWG 22-12	-	AWG 22-12	0.5 mm²	2.5 mm²
Torque (in.lbs)	3.98	-	3.98	4.43	
Screw Size	M3	-	M3	M3	
Test Voltage	1.6 kV	-	1.6 kV	2.0 kV	

[1]Colours according to RAL, there may be variations on colour due to production conditions. Special colours on request.

L'IMPULSION
Retrouvez nous sur
www.limpulsion.fr

AKZ120/..DS-5.08-H-GREY

Spacing 5.08 mm



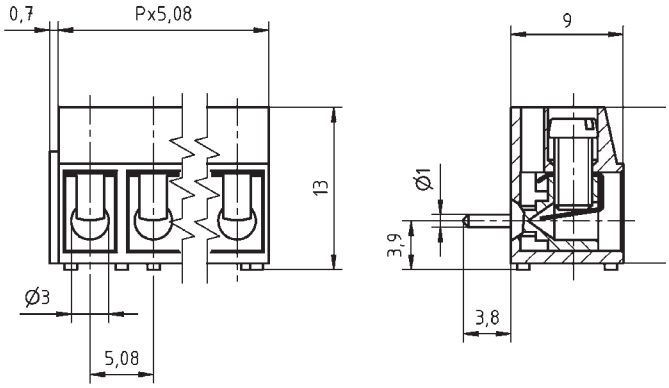

WIRE SIZES	
solid min	0.2 mm²
solid max	2.5 mm²
stranded min	0.2 mm²
stranded max	2.5 mm²
stranded with ferrule min	0.2 mm²
stranded with ferrule max	2.5 mm²
DIMENSIONS	
Stripped Length	6.0 mm
PCB Hole Diameter	1.3 mm
MATERIALS	
Clamp	Brass
Wire Guard	Stainless Steel
Screw	Steel
INSULATING MATERIAL	
Material	PA 6.6
Flammability Class	UL 94 V-0
TEMPERATURES	
Operating Temperature (without mech. load)	-40 °C - 105 °C
WAVE SOLDERING PROCESS	
Soldering Temperature, recommended	260 °C
Peak Soldering Time, recommended	3-4 s
REFLOW PROCESS	
Soldering Temperature, recommended	-
Peak Soldering Time, recommended	-

COLOURS[1]

GREY, RAL 7016 — BLUE, RAL 5015

ACCESSORIES

	Description	Article Number
	Bridge, 2-pole, insulated, BRI/2-5.0/5.08-LIGHT GREY	50000000006
	Bridge, 3-pole, insulated, BRI/3-5.0/5.08-LIGHT GREY	50000000007
	Bridge, 2-pole, BR/2-5.0/5.08-L7.0	50000000008

ORDER DATA (SPACING 5.08 MM)

Poles	Width (mm)	Article Designation	Article Number	PU
2	10.86	AKZ120/2DS-5.08-H-GREY	50120020130G	250
3	15.94	AKZ120/3DS-5.08-H-GREY	50120030130G	250
4	21.02	AKZ120/4DS-5.08-H-GREY	50120040130G	250
5	26.10	AKZ120/5DS-5.08-H-GREY	50120050130G	250
6	31.18	AKZ120/6DS-5.08-H-GREY	50120060130F	200
7	36.26	AKZ120/7DS-5.08-H-GREY	50120070130F	200
8	41.34	AKZ120/8DS-5.08-H-GREY	50120080130E	100
9	46.42	AKZ120/9DS-5.08-H-GREY	50120090130E	100
10	51.50	AKZ120/10DS-5.08-H-GREY	50120100130E	100
11	56.58	AKZ120/11DS-5.08-H-GREY	50120110130E	100
12	61.66	AKZ120/12DS-5.08-H-GREY	50120120130E	100

RATINGS

Usegroup	B	C	D		
Rated Voltage	300 V	-	300 V	250 V	
Rated Current	20 A	-	10 A	24 A	
Rated Wire Size				min	max
solid	AWG 22-12	-	AWG 22-12	0.5 mm²	2.5 mm²
stranded	AWG 22-12	-	AWG 22-12	0.5 mm²	2.5 mm²
Torque (in.lbs)	3.98	-	3.98	4.43	
Screw Size	M3	-	M3	M3	
Test Voltage	1.6 kV	-	1.6 kV	2.0 kV	

[1]Colours according to RAL, there may be variations on colour due to production conditions. Special colours on request.

Spacing 5.0 mm

AK100/..DS-5.0-H-GREY-BL

WIRE SIZES	
solid min	0.2 mm²
solid max	2.5 mm²
stranded min	0.2 mm²
stranded max	2.5 mm²
stranded with ferrule min	0.2 mm²
stranded with ferrule max	2.5 mm²
DIMENSIONS	
Stripped Length	6.0 mm
PCB Hole Diameter	1.3 mm
MATERIALS	
Clamp	Brass
Wire Guard	Stainless Steel
Screw	Steel
INSULATING MATERIAL	
Material	PA 6.6
Flammability Class	UL 94 V-0
TEMPERATURES	
Operating Temperature (without mech. load)	-40 °C - 105 °C
WAVE SOLDERING PROCESS	
Soldering Temperature, recommended	260 °C
Peak Soldering Time, recommended	3-4 s
REFLOW PROCESS	
Soldering Temperature, recommended	-
Peak Soldering Time, recommended	-



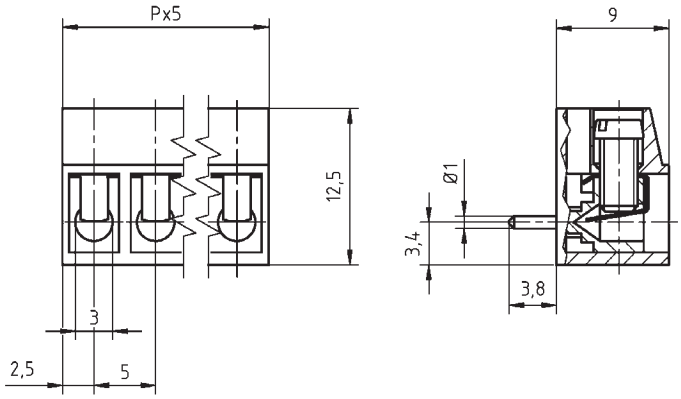

COLOURS[1]

GREY, RAL 7016

ORDER DATA (SPACING 5.0 MM)

Poles	Width (mm)	Article Designation	Article Number	PU
2	10.00	AK100/2DS-5.0-H-GREY-BL	50100022150G	250
3	15.00	AK100/3DS-5.0-H-GREY-BL	50100032150G	250
4	20.00	AK100/4DS-5.0-H-GREY-BL	50100042150G	250
5	25.00	AK100/5DS-5.0-H-GREY-BL	50100052150G	250
6	30.00	AK100/6DS-5.0-H-GREY-BL	50100062150F	200
7	35.00	AK100/7DS-5.0-H-GREY-BL	50100072150F	200
8	40.00	AK100/8DS-5.0-H-GREY-BL	50100082150E	100
9	45.00	AK100/9DS-5.0-H-GREY-BL	50100092150E	100
10	50.00	AK100/10DS-5.0-H-GREY-BL	50100102150E	100
11	55.00	AK100/11DS-5.0-H-GREY-BL	50100112150E	100
12	60.00	AK100/12DS-5.0-H-GREY-BL	50100122150E	100

ACCESSORIES

	Description	Article Number
	Bridge, 2-pole, insulated, BRI/2-5.0/5.08-LIGHT GREY	50000000006
	Bridge, 3-pole, insulated, BRI/3-5.0/5.08-LIGHT GREY	50000000007
	Bridge, 2-pole, BR/2-5.0/5.08-L7.0	50000000008

RATINGS

	cULus			VDE	
Usegroup	B	C	D		
Rated Voltage	300 V	-	300 V	250 V	
Rated Current	20 A	-	10 A	24 A	
Rated Wire Size				min	max
solid	AWG 22-12	-	AWG 22-12	0.5 mm²	2.5 mm²
stranded	AWG 22-12	-	AWG 22-12	0.5 mm²	2.5 mm²
Torque (in.lbs)	3.98	-	3.98	4.43	
Screw Size	M3	-	M3	M3	
Test Voltage	1.6 kV	-	1.6 kV	2.0 kV	

[1]Colours according to RAL, there may be variations on colour due to production conditions. Special colours on request.

L'IMPULSION
Retrouvez nous sur
www.limpulsion.fr

AK104/..DS-5.0-V-GREY

Spacing 5.0 mm



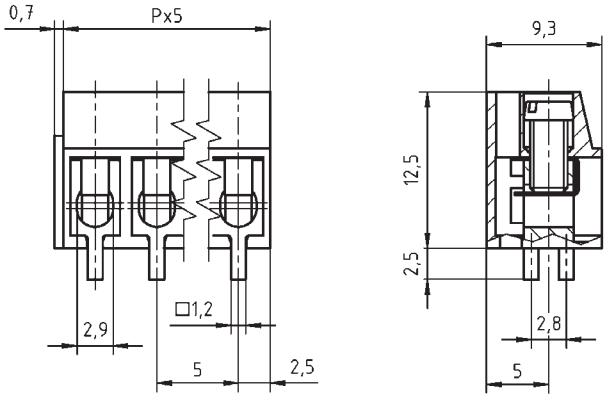

WIRE SIZES	
solid min	0.2 mm²
solid max	4.0 mm²
stranded min	0.2 mm²
stranded max	4.0 mm²
stranded with ferrule min	0.2 mm²
stranded with ferrule max	2.5 mm²
DIMENSIONS	
Stripped Length	7.0 mm
PCB Hole Diameter	2.0 mm
MATERIALS	
Clamp	Brass
Wire Guard	Stainless Steel
Screw	Steel
INSULATING MATERIAL	
Material	PA 6.6
Flammability Class	UL 94 V-0
TEMPERATURES	
Operating Temperature (without mech. load)	-40 °C - 105 °C
WAVE SOLDERING PROCESS	
Soldering Temperature, recommended	260 °C
Peak Soldering Time, recommended	3-4 s
REFLOW PROCESS	
Soldering Temperature, recommended	-
Peak Soldering Time, recommended	-

COLOURS[1]
GREY, RAL 7016

ACCESSORIES

	Description	Article Number
	Bridge, 2-pole, insulated, BRI/2-5.0/5.08-LIGHT GREY	50000000006
	Bridge, 3-pole, insulated, BRI/3-5.0/5.08-LIGHT GREY	50000000007
	Bridge, 2-pole, BR/2-5.0/5.08-L7.0	50000000008

ORDER DATA (SPACING 5.0 MM)

Poles	Width (mm)	Article Designation	Article Number	PU
2	10.70	AK104/2DS-5.0-V-GREY	50104020070G	250
3	15.70	AK104/3DS-5.0-V-GREY	50104030070G	250
4	20.70	AK104/4DS-5.0-V-GREY	50104040070G	250
5	25.70	AK104/5DS-5.0-V-GREY	50104050070G	250
6	30.70	AK104/6DS-5.0-V-GREY	50104060070F	200
7	35.70	AK104/7DS-5.0-V-GREY	50104070070F	200
8	40.70	AK104/8DS-5.0-V-GREY	50104080070E	100
9	45.70	AK104/9DS-5.0-V-GREY	50104090070E	100
10	50.70	AK104/10DS-5.0-V-GREY	50104100070E	100
11	55.70	AK104/11DS-5.0-V-GREY	50104110070E	100
12	60.70	AK104/12DS-5.0-V-GREY	50104120070E	100

RATINGS

	c UL us			VDE	
Usegroup	B	C	D		
Rated Voltage	300 V	150 V	300 V	250 V	
Rated Current	20 A	20 A	10 A	32 A	
Rated Wire Size				min	max
solid	AWG 22-12	AWG 22-12	AWG 22-12	0.5 mm²	4.0 mm²
stranded	AWG 22-12	AWG 22-12	AWG 22-12	0.5 mm²	4.0 mm²
Torque (in.lbs)	7.08	7.08	7.08	4.43	
Screw Size	M3	M3	M3	M3	
Test Voltage	1.6 kV	1.3 kV	1.6 kV	2.0 kV	

[1]Colours according to RAL, there may be variations on colour due to production conditions. Special colours on request.

Spacing 5.0 mm / Spacing 5.08 mm

AK500/..DS-5.0-V-GREY
AKZ500/..DS-5.08-V-GREY

WIRE SIZES	
solid min	0.2 mm²
solid max	1.5 mm²
stranded min	0.2 mm²
stranded max	1.5 mm²
stranded with ferrule min	0.2 mm²
stranded with ferrule max	1.5 mm²
DIMENSIONS	
Stripped Length	6.0 mm
PCB Hole Diameter	1.3 mm
MATERIALS	
Clamp	Brass
Wire Guard	Stainless Steel
Screw	Steel
INSULATING MATERIAL	
Material	PA 6.6
Flammability Class	UL 94 V-0
TEMPERATURES	
Operating Temperature (without mech. load)	-40 °C - 105 °C
WAVE SOLDERING PROCESS	
Soldering Temperature, recommended	260 °C
Peak Soldering Time, recommended	3-4 s
REFLOW PROCESS	
Soldering Temperature, recommended	-
Peak Soldering Time, recommended	-



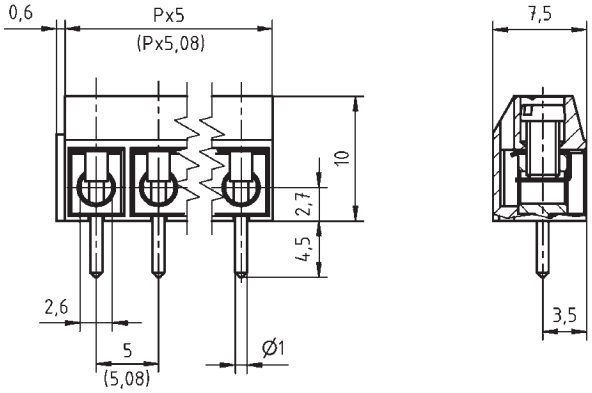

COLOURS[1]

GREY, RAL 7016		BLACK, RAL 9011	
GREEN, RAL 6018		BLUE, RAL 5015	

ORDER DATA (SPACING 5.0 MM)

Poles	Width (mm)	Article Designation	Article Number	PU
2	10.60	AK500/2DS-5.0-V-GREY	50500020121G	250
3	15.60	AK500/3DS-5.0-V-GREY	50500030121G	250
4	20.60	AK500/4DS-5.0-V-GREY	50500040121G	250
5	25.60	AK500/5DS-5.0-V-GREY	50500050121G	250
6	30.60	AK500/6DS-5.0-V-GREY	50500060121G	250
7	35.60	AK500/7DS-5.0-V-GREY	50500070121G	250
8	40.60	AK500/8DS-5.0-V-GREY	50500080121E	100
9	45.60	AK500/9DS-5.0-V-GREY	50500090121E	100
...	...	...	...	...
12	60.60	AK500/12DS-5.0-V-GREY	50500120121E	100

ORDER DATA (SPACING 5.08 MM)

Poles	Width (mm)	Article Designation	Article Number	PU
2	10.76	AKZ500/2DS-5.08-V-GREY	50500020134G	250
3	15.84	AKZ500/3DS-5.08-V-GREY	50500030134G	250
4	20.92	AKZ500/4DS-5.08-V-GREY	50500040134G	250
5	26.00	AKZ500/5DS-5.08-V-GREY	50500050134G	250
6	31.08	AKZ500/6DS-5.08-V-GREY	50500060134G	250
7	36.16	AKZ500/7DS-5.08-V-GREY	50500070134G	250
8	41.24	AKZ500/8DS-5.08-V-GREY	50500080134E	100
9	46.32	AKZ500/9DS-5.08-V-GREY	50500090134E	100
...	...	...	...	...
12	61.56	AKZ500/12DS-5.08-V-GREY	50500120134E	100

ACCESSORIES

	Description	Article Number
	Bridge, 2-pole, insulated, BRI/2-5.0/5.08-LIGHT GREY	50000000006
	Bridge, 3-pole, insulated, BRI/3-5.0/5.08-LIGHT GREY	50000000007
	Bridge, 2-pole, BR/2-5.0/5.08-L7.0	50000000008

RATINGS

	cULus			VDE	
Usegroup	B	C	D		
Rated Voltage	300 V	-	300 V	250 V	
Rated Current	15 A	-	10 A	17.5 A	
Rated Wire Size				min	max
solid	AWG 22-14	-	AWG 22-14	0.5 mm²	1.5 mm²
stranded	AWG 22-14	-	AWG 22-14	0.5 mm²	1.5 mm²
Torque (in.lbs)	3.54	-	3.54	3.54	
Screw Size	M2.6	-	M2.6	M2.6	
Test Voltage	1.6 kV	-	1.6 kV	2.0 kV	

[1]Colours according to RAL, there may be variations on colour due to production conditions. Special colours on request.

L'IMPULSION
Retrouvez nous sur
www.limpulsion.fr

AK500/..DS-5.0-V-GREY-BL

Spacing 5.0 mm



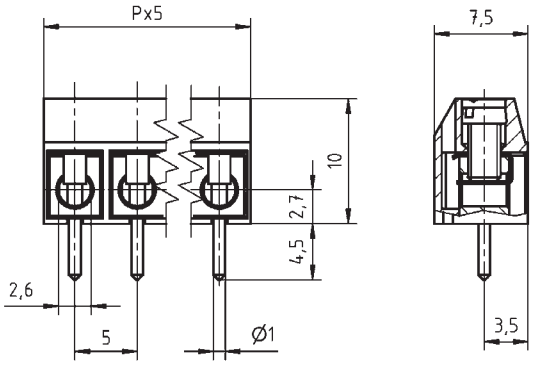

WIRE SIZES	
solid min	0.2 mm²
solid max	1.5 mm²
stranded min	0.2 mm²
stranded max	1.5 mm²
stranded with ferrule min	0.2 mm²
stranded with ferrule max	1.5 mm²
DIMENSIONS	
Stripped Length	6.0 mm
PCB Hole Diameter	1.3 mm
MATERIALS	
Clamp	Brass
Wire Guard	Stainless Steel
Screw	Steel
INSULATING MATERIAL	
Material	PA 6.6
Flammability Class	UL 94 V-0
TEMPERATURES	
Operating Temperature (without mech. load)	-40 °C - 105 °C
WAVE SOLDERING PROCESS	
Soldering Temperature, recommended	260 °C
Peak Soldering Time, recommended	3-4 s
REFLOW PROCESS	
Soldering Temperature, recommended	-
Peak Soldering Time, recommended	-

COLOURS[1]

GREY, RAL 7016	BLACK, RAL 9011
GREEN, RAL 6018	

ACCESSORIES

	Description	Article Number
	Bridge, 2-pole, insulated, BRI/2-5.0/5.08-LIGHT GREY	50000000006
	Bridge, 3-pole, insulated, BRI/3-5.0/5.08-LIGHT GREY	50000000007
	Bridge, 2-pole, BR/2-5.0/5.08-L7.0	50000000008

ORDER DATA (SPACING 5.0 MM)

Poles	Width (mm)	Article Designation	Article Number	PU
2	10.00	AK500/2DS-5.0-V-GREY-BL	50500023121G	250
3	15.00	AK500/3DS-5.0-V-GREY-BL	50500033121G	250
4	20.00	AK500/4DS-5.0-V-GREY-BL	50500043121G	250
5	25.00	AK500/5DS-5.0-V-GREY-BL	50500053121G	250
6	30.00	AK500/6DS-5.0-V-GREY-BL	50500063121G	250
7	35.00	AK500/7DS-5.0-V-GREY-BL	50500073121G	250
8	40.00	AK500/8DS-5.0-V-GREY-BL	50500083121E	100
9	45.00	AK500/9DS-5.0-V-GREY-BL	50500093121E	100
10	50.00	AK500/10DS-5.0-V-GREY-BL	50500103121E	100
11	55.00	AK500/11DS-5.0-V-GREY-BL	50500113121E	100
12	60.00	AK500/12DS-5.0-V-GREY-BL	50500123121E	100

RATINGS

	c UL us			VDE	
Usegroup	B	C	D		
Rated Voltage	300 V	-	300 V	250 V	
Rated Current	15 A	-	10 A	17.5 A	
Rated Wire Size				min	max
solid	AWG 22-14	-	AWG 22-14	0.5 mm²	1.5 mm²
stranded	AWG 22-14	-	AWG 22-14	0.5 mm²	1.5 mm²
Torque (in.lbs)	3.54	-	3.54	3.54	
Screw Size	M2.6	-	M2.6	M2.6	
Test Voltage	1.6 kV	-	1.6 kV	2.0 kV	

[1]Colours according to RAL, there may be variations on colour due to production conditions. Special colours on request.

Spacing 5.0 mm / Spacing 5.08 mm

AK500/..DS-5.0-H-GREY
AKZ500/..DS-5.08-H-GREY

WIRE SIZES	
solid min	0.2 mm²
solid max	1.5 mm²
stranded min	0.2 mm²
stranded max	1.5 mm²
stranded with ferrule min	0.2 mm²
stranded with ferrule max	1.5 mm²
DIMENSIONS	
Stripped Length	5.0 mm
PCB Hole Diameter	1.3 mm
MATERIALS	
Clamp	Brass
Wire Guard	Stainless Steel
Screw	Steel
INSULATING MATERIAL	
Material	PA 6.6
Flammability Class	UL 94 V-0
TEMPERATURES	
Operating Temperature (without mech. load)	-40 °C - 105 °C
WAVE SOLDERING PROCESS	
Soldering Temperature, recommended	260 °C
Peak Soldering Time, recommended	3-4 s
REFLOW PROCESS	
Soldering Temperature, recommended	-
Peak Soldering Time, recommended	-



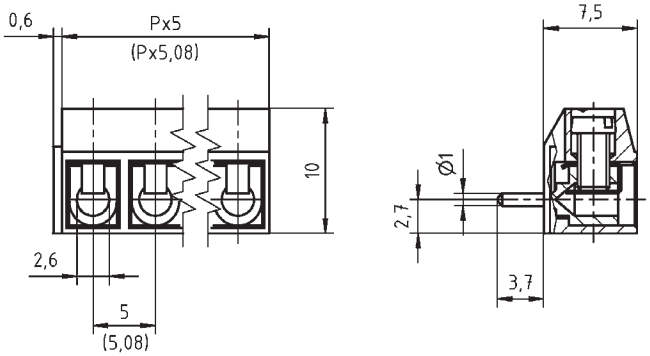

COLOURS[1]

GREY, RAL 7016 — BLUE, RAL 5015

ORDER DATA (SPACING 5.0 MM)

Poles	Width (mm)	Article Designation	Article Number	PU
2	10.60	AK500/2DS-5.0-H-GREY	50500020171G	250
3	15.60	AK500/3DS-5.0-H-GREY	50500030171G	250
4	20.60	AK500/4DS-5.0-H-GREY	50500040171G	250
5	25.60	AK500/5DS-5.0-H-GREY	50500050171G	250
6	30.60	AK500/6DS-5.0-H-GREY	50500060171G	250
7	35.60	AK500/7DS-5.0-H-GREY	50500070171G	250
8	40.60	AK500/8DS-5.0-H-GREY	50500080171E	100
9	45.60	AK500/9DS-5.0-H-GREY	50500090171E	100
...	...	...	...	...
12	60.60	AK500/12DS-5.0-H-GREY	50500120171E	100

ORDER DATA (SPACING 5.08 MM)

Poles	Width (mm)	Article Designation	Article Number	PU
2	10.76	AKZ500/2DS-5.08-H-GREY	50500020184G	250
3	15.84	AKZ500/3DS-5.08-H-GREY	50500030184G	250
4	20.92	AKZ500/4DS-5.08-H-GREY	50500040184G	250
5	26.00	AKZ500/5DS-5.08-H-GREY	50500050184G	250
6	31.08	AKZ500/6DS-5.08-H-GREY	50500060184G	250
7	36.16	AKZ500/7DS-5.08-H-GREY	50500070184G	250
8	41.24	AKZ500/8DS-5.08-H-GREY	50500080184E	100
9	46.32	AKZ500/9DS-5.08-H-GREY	50500090184E	100
...	...	...	...	...
12	61.56	AKZ500/12DS-5.08-H-GREY	50500120184E	100

ACCESSORIES

	Description	Article Number
	Bridge, 2-pole, insulated, BRI/2-5.0/5.08-LIGHT GREY	50000000006
	Bridge, 3-pole, insulated, BRI/3-5.0/5.08-LIGHT GREY	50000000007
	Bridge, 2-pole, BR/2-5.0/5.08-L7.0	50000000008

RATINGS

	cULus			VDE	
Usegroup	B	C	D		
Rated Voltage	300 V	-	300 V	250 V	
Rated Current	15 A	-	10 A	17.5 A	
Rated Wire Size				min	max
solid	AWG 22-14	-	AWG 22-14	0.5 mm²	1.5 mm²
stranded	AWG 22-14	-	AWG 22-14	0.5 mm²	1.5 mm²
Torque (in.lbs)	3.54	-	3.54	3.54	
Screw Size	M2.6	-	M2.6	M2.6	
Test Voltage	1.6 kV	-	1.6 kV	2.0 kV	

[1]Colours according to RAL, there may be variations on colour due to production conditions. Special colours on request.

L'IMPULSION
Retrouvez nous sur
www.limpulsion.fr

AK500/..DS-5.0-H-GREY-BL

Spacing 5.0 mm



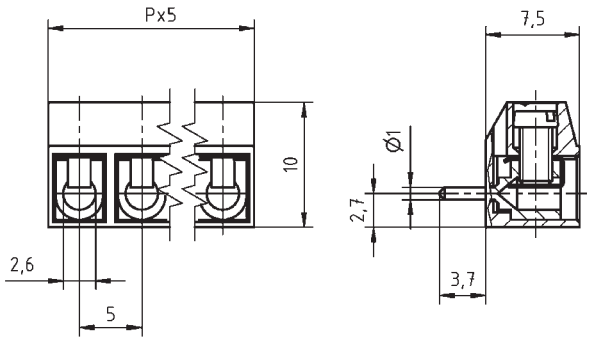

WIRE SIZES	
solid min	0.2 mm²
solid max	1.5 mm²
stranded min	0.2 mm²
stranded max	1.5 mm²
stranded with ferrule min	0.2 mm²
stranded with ferrule max	1.5 mm²
DIMENSIONS	
Stripped Length	6.0 mm
PCB Hole Diameter	1.3 mm
MATERIALS	
Clamp	Brass
Wire Guard	Stainless Steel
Screw	Steel
INSULATING MATERIAL	
Material	PA 6.6
Flammability Class	UL 94 V-0
TEMPERATURES	
Operating Temperature (without mech. load)	-40 °C - 105 °C
WAVE SOLDERING PROCESS	
Soldering Temperature, recommended	260 °C
Peak Soldering Time, recommended	3-4 s
REFLOW PROCESS	
Soldering Temperature, recommended	-
Peak Soldering Time, recommended	-

COLOURS[1]	
	GREY, RAL 7016

ACCESSORIES

	Description	Article Number
	Bridge, 2-pole, insulated, BRI/2-5.0/5.08-LIGHT GREY	50000000006
	Bridge, 3-pole, insulated, BRI/3-5.0/5.08-LIGHT GREY	50000000007
	Bridge, 2-pole, BR/2-5.0/5.08-L7.0	50000000008

ORDER DATA (SPACING 5.0 MM)

Poles	Width (mm)	Article Designation	Article Number	PU
2	10.00	AK500/2DS-5.0-H-GREY-BL	50500023171G	250
3	15.00	AK500/3DS-5.0-H-GREY-BL	50500033171G	250
4	20.00	AK500/4DS-5.0-H-GREY-BL	50500043171G	250
5	25.00	AK500/5DS-5.0-H-GREY-BL	50500053171G	250
6	30.00	AK500/6DS-5.0-H-GREY-BL	50500063171G	250
7	35.00	AK500/7DS-5.0-H-GREY-BL	50500073171G	250
8	40.00	AK500/8DS-5.0-H-GREY-BL	50500083171E	100
9	45.00	AK500/9DS-5.0-H-GREY-BL	50500093171E	100
10	50.00	AK500/10DS-5.0-H-GREY-BL	50500103171E	100
11	55.00	AK500/11DS-5.0-H-GREY-BL	50500113171E	100
12	60.00	AK500/12DS-5.0-H-GREY-BL	50500123171E	100

RATINGS

	c UL us			VDE	
Usegroup	B	C	D		
Rated Voltage	300 V	-	300 V	250 V	
Rated Current	15 A	-	10 A	17.5 A	
Rated Wire Size				min	max
solid	AWG 22-14	-	AWG 22-14	0.5 mm²	1.5 mm²
stranded	AWG 22-14	-	AWG 22-14	0.5 mm²	1.5 mm²
Torque (in.lbs)	3.54	-	3.54	3.54	
Screw Size	M2.6	-	M2.6	M2.6	
Test Voltage	1.6 kV	-	1.6 kV	2.0 kV	

[1]Colours according to RAL, there may be variations on colour due to production conditions. Special colours on request.

Spacing 5.0 mm

AK590/..DS-5.0-GREY

WIRE SIZES	
solid min	0.2 mm²
solid max	1.5 mm²
stranded min	0.2 mm²
stranded max	1.5 mm²
stranded with ferrule min	0.2 mm²
stranded with ferrule max	1.5 mm²
DIMENSIONS	
Stripped Length	6.0 mm
PCB Hole Diameter	1.3 mm
MATERIALS	
Clamp	Brass
Wire Guard	Stainless Steel
Screw	Steel
INSULATING MATERIAL	
Material	PA 6.6
Flammability Class	UL 94 V-0
TEMPERATURES	
Operating Temperature (without mech. load)	-40 °C - 105 °C
WAVE SOLDERING PROCESS	
Soldering Temperature, recommended	260 °C
Peak Soldering Time, recommended	3-4 s
REFLOW PROCESS	
Soldering Temperature, recommended	-
Peak Soldering Time, recommended	-



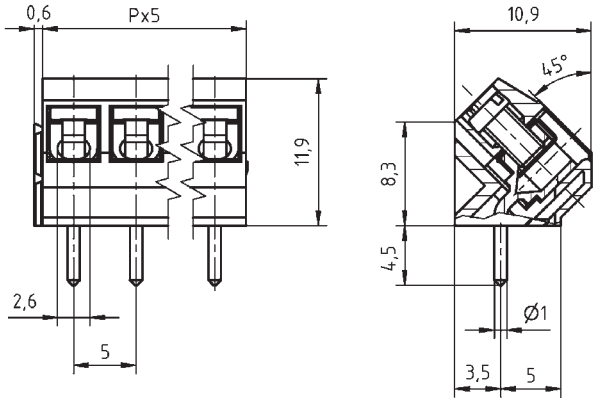

COLOURS[1]

■	GREY, RAL 7016	■	BLUE, RAL 5015
■	LIGHT GREEN, similar RAL 6018		

ORDER DATA (SPACING 5.0 MM)

Poles	Width (mm)	Article Designation	Article Number	PU
2	10.60	AK590/2DS-5.0-GREY	50590020121G	250
3	15.60	AK590/3DS-5.0-GREY	50590030121G	250
4	20.60	AK590/4DS-5.0-GREY	50590040121G	250
5	25.60	AK590/5DS-5.0-GREY	50590050121G	250
6	30.60	AK590/6DS-5.0-GREY	50590060121G	250
7	35.60	AK590/7DS-5.0-GREY	50590070121G	250
8	40.60	AK590/8DS-5.0-GREY	50590080121E	100
9	45.60	AK590/9DS-5.0-GREY	50590090121E	100
10	50.60	AK590/10DS-5.0-GREY	50590100121E	100
11	55.60	AK590/11DS-5.0-GREY	50590110121E	100
12	60.60	AK590/12DS-5.0-GREY	50590120121E	100

ACCESSORIES

	Description	Article Number
	Bridge, 2-pole, insulated, BRI/2-5.0/5.08-LIGHT GREY	50000000006
	Bridge, 3-pole, insulated, BRI/3-5.0/5.08-LIGHT GREY	50000000007
	Bridge, 2-pole, BR/2-5.0/5.08-L7.0	50000000008

RATINGS

	c UL us			VDE	
Usegroup	B	C	D		
Rated Voltage	300 V	-	300 V	250 V	
Rated Current	15 A	-	10 A	17.5 A	
Rated Wire Size				min	max
solid	AWG 22-14	-	AWG 22-14	0.5 mm²	1.5 mm²
stranded	AWG 22-14	-	AWG 22-14	0.5 mm²	1.5 mm²
Torque (in.lbs)	3.54	-	3.54	3.54	
Screw Size	M2.6	-	M2.6	M2.6	
Test Voltage	1.6 kV	-	1.6 kV	2.0 kV	

[1]Colours according to RAL, there may be variations on colour due to production conditions. Special colours on request.

L'IMPULSION
Retrouvez nous sur
www.limpulsion.fr

AK550/..DS-7.0-V-GREY

Spacing 7.0 mm



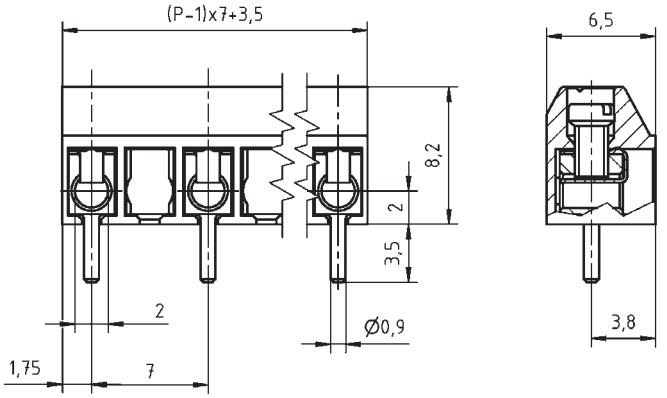

WIRE SIZES	
solid min	0.08 mm²
solid max	1.5 mm²
stranded min	0.08 mm²
stranded max	1.0 mm²
stranded with ferrule min	0.14 mm²
stranded with ferrule max	0.5 mm²
DIMENSIONS	
Stripped Length	5.5 mm
PCB Hole Diameter	1.2 mm
MATERIALS	
Clamp	Brass
Wire Guard	Stainless Steel
Screw	Steel
INSULATING MATERIAL	
Material	PA 6.6
Flammability Class	UL 94 V-0
TEMPERATURES	
Operating Temperature (without mech. load)	-40 °C - 105 °C
WAVE SOLDERING PROCESS	
Soldering Temperature, recommended	260 °C
Peak Soldering Time, recommended	3-4 s
REFLOW PROCESS	
Soldering Temperature, recommended	-
Peak Soldering Time, recommended	-

COLOURS1			
	GREY, RAL 7016		PEBBLE GREY, RAL 7032
	GREEN, RAL 6018		LIGHT GREEN, similar RAL 6018

ACCESSORIES

	Description	Article Number
	Bridge, 2-pole, insulated, BRI/2-7.0/7.62-L7.5-LIGHT GREY	50000000018

ORDER DATA (SPACING 7.0 MM)

Poles	Width (mm)	Article Designation	Article Number	PU
2	10.50	AK550/2DS-7.0-V-GREY	50550020211G	250
3	17.50	AK550/3DS-7.0-V-GREY	50550030211G	250
4	24.50	AK550/4DS-7.0-V-GREY	50550040211G	250
5	31.50	AK550/5DS-7.0-V-GREY	50550050211E	100
6	38.50	AK550/6DS-7.0-V-GREY	50550060211D	50
7	45.50	AK550/7DS-7.0-V-GREY	50550070211D	50
8	52.50	AK550/8DS-7.0-V-GREY	50550080211D	50

RATINGS

	c UL us			VDE	
Usegroup	B	C	D		
Rated Voltage	300 V	150 V	300 V	450 V	
Rated Current	6 A	6 A	6 A	13.5 A	
Rated Wire Size				min	max
solid	AWG 28-16	AWG 28-16	AWG 28-16	0.5 mm²	1.0 mm²
stranded	AWG 28-16	AWG 28-16	AWG 28-16	0.5 mm²	1.0 mm²
Torque (in.lbs)	2.21	2.21	2.21	1.77	
Screw Size	M2	M2	M2	M2	
Test Voltage	1.6 kV	1.3 kV	1.6 kV	2.5 kV	

[1]Colours according to RAL, there may be variations on colour due to production conditions. Special colours on request.

Spacing 7.0 mm

AK550/..DS-7.0-H-GREY

WIRE SIZES	
solid min	0.08 mm²
solid max	1.5 mm²
stranded min	0.08 mm²
stranded max	1.0 mm²
stranded with ferrule min	0.14 mm²
stranded with ferrule max	0.5 mm²
DIMENSIONS	
Stripped Length	5.5 mm
PCB Hole Diameter	1.2 mm
MATERIALS	
Clamp	Brass
Wire Guard	Stainless Steel
Screw	Steel
INSULATING MATERIAL	
Material	PA 6.6
Flammability Class	UL 94 V-0
TEMPERATURES	
Operating Temperature (without mech. load)	-40 °C - 105 °C
WAVE SOLDERING PROCESS	
Soldering Temperature, recommended	260 °C
Peak Soldering Time, recommended	3-4 s
REFLOW PROCESS	
Soldering Temperature, recommended	-
Peak Soldering Time, recommended	-



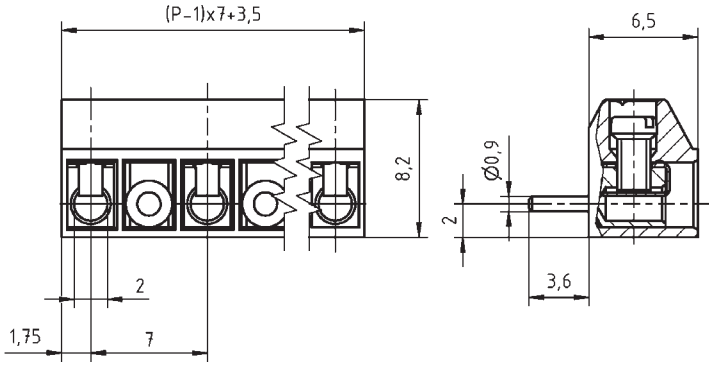

COLOURS[1]

GREY, RAL 7016		GREEN, RAL 6018	
LIGHT GREEN, similar RAL 6018			

ORDER DATA (SPACING 7.0 MM)

Poles	Width (mm)	Article Designation	Article Number	PU
2	10.50	AK550/2DS-7.0-H-GREY	50550020240G	250
3	17.50	AK550/3DS-7.0-H-GREY	50550030240G	250
4	24.50	AK550/4DS-7.0-H-GREY	50550040240G	250
5	31.50	AK550/5DS-7.0-H-GREY	50550050240E	100
6	38.50	AK550/6DS-7.0-H-GREY	50550060240D	50
7	45.50	AK550/7DS-7.0-H-GREY	50550070240D	50
8	52.50	AK550/8DS-7.0-H-GREY	50550080240D	50

ACCESSORIES

	Description	Article Number
	Bridge, 2-pole, insulated, BRI/2-7.0/7.62-L7.5-LIGHT GREY	50000000018

RATINGS

	c UL us			VDE	
Usegroup	B	C	D		
Rated Voltage	300 V	150 V	300 V	450 V	
Rated Current	6 A	6 A	6 A	13.5 A	
Rated Wire Size				min	max
solid	AWG 28-16	AWG 28-16	AWG 28-16	0.5 mm²	1.0 mm²
stranded	AWG 28-16	AWG 28-16	AWG 28-16	0.5 mm²	1.0 mm²
Torque (in.lbs)	2.21	2.21	2.21	1.77	
Screw Size	M2	M2	M2	M2	
Test Voltage	1.6 kV	1.3 kV	1.6 kV	2.5 kV	

[1]Colours according to RAL, there may be variations on colour due to production conditions. Special colours on request.

L'IMPULSION
Retrouvez nous sur
www.limpulsion.fr

AK110/..DS-7.5-V-GREY

Spacing 7.5 mm



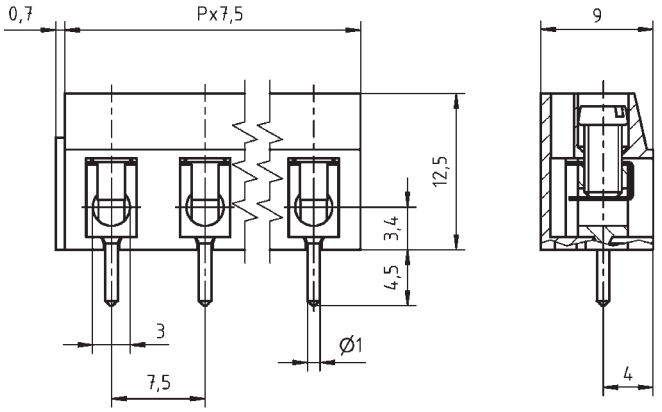

WIRE SIZES	
solid min	0.2 mm²
solid max	2.5 mm²
stranded min	0.2 mm²
stranded max	2.5 mm²
stranded with ferrule min	0.2 mm²
stranded with ferrule max	2.5 mm²
DIMENSIONS	
Stripped Length	7.0 mm
PCB Hole Diameter	1.3 mm
MATERIALS	
Clamp	Brass
Wire Guard	Stainless Steel
Screw	Steel
INSULATING MATERIAL	
Material	PA 6.6
Flammability Class	UL 94 V-0
TEMPERATURES	
Operating Temperature (without mech. load)	-40 °C - 105 °C
WAVE SOLDERING PROCESS	
Soldering Temperature, recommended	260 °C
Peak Soldering Time, recommended	3-4 s
REFLOW PROCESS	
Soldering Temperature, recommended	-
Peak Soldering Time, recommended	-

COLOURS[1]

GREY, RAL 7016	BLACK, RAL 9011
RED, RAL 3003	LIGHT GREEN, similar RAL 6018

ACCESSORIES

	Description	Article Number
	Bridge, 2-pole, insulated, BRI/2-7.5/7.62-L8.2-LIGHT GREY	50000000017

ORDER DATA (SPACING 7.5 MM)

Poles	Width (mm)	Article Designation	Article Number	PU
2	15.70	AK110/2DS-7.5-V-GREY	50110020070F	200
3	23.20	AK110/3DS-7.5-V-GREY	50110030070F	200
4	30.70	AK110/4DS-7.5-V-GREY	50110040070F	200
5	38.20	AK110/5DS-7.5-V-GREY	50110050070E	100
6	45.70	AK110/6DS-7.5-V-GREY	50110060070E	100
7	53.20	AK110/7DS-7.5-V-GREY	50110070070E	100
8	60.70	AK110/8DS-7.5-V-GREY	50110080070E	100
9	68.20	AK110/9DS-7.5-V-GREY	50110090070E	100
10	75.70	AK110/10DS-7.5-V-GREY	50110100070D	50
11	83.20	AK110/11DS-7.5-V-GREY	50110110070D	50
12	90.70	AK110/12DS-7.5-V-GREY	50110120070D	50

RATINGS

	c UL us			VDE	
Usegroup	B	C	D		
Rated Voltage	300 V	150 V	300 V	750 V	
Rated Current	20 A	20 A	10 A	24 A	
Rated Wire Size				min	max
solid	AWG 22-14	AWG 22-14	AWG 22-14	0.5 mm²	2.5 mm²
stranded	AWG 22-14	AWG 22-14	AWG 22-14	0.5 mm²	2.5 mm²
Torque (in.lbs)	3.98	3.98	3.98	4.43	
Screw Size	M3	M3	M3	M3	
Test Voltage	1.6 kV	1.3 kV	1.6 kV	3.0 kV	

[1]Colours according to RAL, there may be variations on colour due to production conditions. Special colours on request.

Spacing 7.5 mm

AK110/..DS-7.5-H-GREY

WIRE SIZES	
solid min	0.2 mm²
solid max	2.5 mm²
stranded min	0.2 mm²
stranded max	2.5 mm²
stranded with ferrule min	0.2 mm²
stranded with ferrule max	2.5 mm²
DIMENSIONS	
Stripped Length	6.0 mm
PCB Hole Diameter	1.3 mm
MATERIALS	
Clamp	Brass
Wire Guard	Stainless Steel
Screw	Steel
INSULATING MATERIAL	
Material	PA 6.6
Flammability Class	UL 94 V-0
TEMPERATURES	
Operating Temperature (without mech. load)	-40 °C - 105 °C
WAVE SOLDERING PROCESS	
Soldering Temperature, recommended	260 °C
Peak Soldering Time, recommended	3-4 s
REFLOW PROCESS	
Soldering Temperature, recommended	-
Peak Soldering Time, recommended	-



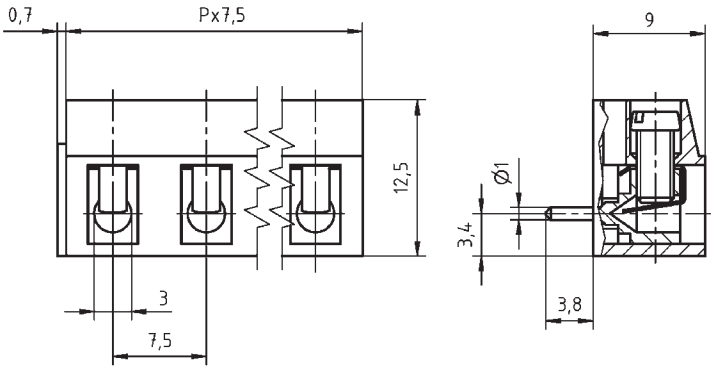

COLOURS[1]

GREY, RAL 7016		BLACK, RAL 9011	
RED, RAL 3003		LIGHT GREEN, similar RAL 6018	

ORDER DATA (SPACING 7.5 MM)

Poles	Width (mm)	Article Designation	Article Number	PU
2	15.70	AK110/2DS-7.5-H-GREY	50110020100F	200
3	23.20	AK110/3DS-7.5-H-GREY	50110030100F	200
4	30.70	AK110/4DS-7.5-H-GREY	50110040100F	200
5	38.20	AK110/5DS-7.5-H-GREY	50110050100E	100
6	45.70	AK110/6DS-7.5-H-GREY	50110060100E	100
7	53.20	AK110/7DS-7.5-H-GREY	50110070100E	100
8	60.70	AK110/8DS-7.5-H-GREY	50110080100E	100
9	68.20	AK110/9DS-7.5-H-GREY	50110090100E	100
10	75.70	AK110/10DS-7.5-H-GREY	50110100100D	50
11	83.20	AK110/11DS-7.5-H-GREY	50110110100D	50
12	90.70	AK110/12DS-7.5-H-GREY	50110120100D	50

ACCESSORIES

	Description	Article Number
	Bridge, 2-pole, insulated, BRI/2-7.5/7.62-L8.2-LIGHT GREY	50000000017

RATINGS

	cULus			VDE	
Usegroup	B	C	D		
Rated Voltage	300 V	150 V	300 V	750 V	
Rated Current	20 A	20 A	10 A	24 A	
Rated Wire Size				min	max
solid	AWG 22-14	AWG 22-14	AWG 22-14	0.5 mm²	2.5 mm²
stranded	AWG 22-14	AWG 22-14	AWG 22-14	0.5 mm²	2.5 mm²
Torque (in.lbs)	3.98	3.98	3.98	4.43	
Screw Size	M3	M3	M3	M3	
Test Voltage	1.6 kV	1.3 kV	1.6 kV	3.0 kV	

[1]Colours according to RAL, there may be variations on colour due to production conditions. Special colours on request.

L'IMPULSION
Retrouvez nous sur
www.limpulsion.fr

AK114/..DS-7.5-V-GREY

Spacing 7.5 mm



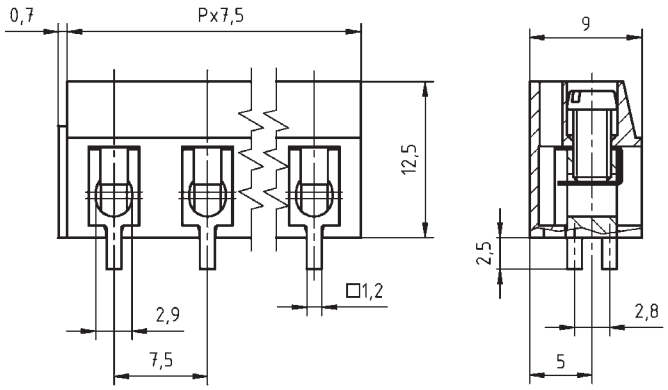

WIRE SIZES	
solid min	0.2 mm²
solid max	4.0 mm²
stranded min	0.2 mm²
stranded max	2.5 mm²
stranded with ferrule min	0.2 mm²
stranded with ferrule max	2.5 mm²
DIMENSIONS	
Stripped Length	7.0 mm
PCB Hole Diameter	2.0 mm
MATERIALS	
Clamp	Brass
Wire Guard	Stainless Steel
Screw	Steel
INSULATING MATERIAL	
Material	PA 6.6
Flammability Class	UL 94 V-0
TEMPERATURES	
Operating Temperature (without mech. load)	-40 °C - 105 °C
WAVE SOLDERING PROCESS	
Soldering Temperature, recommended	260 °C
Peak Soldering Time, recommended	3-4 s
REFLOW PROCESS	
Soldering Temperature, recommended	-
Peak Soldering Time, recommended	-

COLOURS[1]	
	GREY, RAL 7016

ACCESSORIES

	Description	Article Number
	Bridge, 2-pole, insulated, BRI/2-7.5/7.62-L8.2-LIGHT GREY	50000000017

ORDER DATA (SPACING 7.5 MM)

Poles	Width (mm)	Article Designation	Article Number	PU
2	15.70	AK114/2DS-7.5-V-GREY	50114020070F	200
3	23.20	AK114/3DS-7.5-V-GREY	50114030070F	200
4	30.70	AK114/4DS-7.5-V-GREY	50114040070F	200
5	38.20	AK114/5DS-7.5-V-GREY	50114050070E	100
6	45.70	AK114/6DS-7.5-V-GREY	50114060070E	100
7	53.20	AK114/7DS-7.5-V-GREY	50114070070E	100
8	60.70	AK114/8DS-7.5-V-GREY	50114080070E	100
9	68.20	AK114/9DS-7.5-V-GREY	50114090070E	100
10	75.70	AK114/10DS-7.5-V-GREY	50114100070D	50
11	83.20	AK114/11DS-7.5-V-GREY	50114110070D	50
12	90.70	AK114/12DS-7.5-V-GREY	50114120070D	50

RATINGS

	c UL us			VDE	
Usegroup	B	C	D		
Rated Voltage	300 V	150 V	300 V	1.000 V	
Rated Current	20 A	10 A	20 A	32 A	
Rated Wire Size				min	max
solid	AWG 22-12	AWG 22-12	AWG 22-12	0.5 mm²	4.0 mm²
stranded	AWG 22-12	AWG 22-12	AWG 22-12	0.5 mm²	4.0 mm²
Torque (in.lbs)	7.08	7.08	7.08	4.43	
Screw Size	M3	M3	M3	M3	
Test Voltage	1.6 kV	1.3 kV	1.6 kV	3.0 kV	

[1]Colours according to RAL, there may be variations on colour due to production conditions. Special colours on request.

Spacing 10.0 mm

AK100/..DS-10.0-V-GREY

WIRE SIZES	
solid min	0.2 mm²
solid max	2.5 mm²
stranded min	0.2 mm²
stranded max	2.5 mm²
stranded with ferrule min	0.2 mm²
stranded with ferrule max	2.5 mm²
DIMENSIONS	
Stripped Length	7.0 mm
PCB Hole Diameter	1.3 mm
MATERIALS	
Clamp	Brass
Wire Guard	Stainless Steel
Screw	Steel
INSULATING MATERIAL	
Material	PA 6.6
Flammability Class	UL 94 V-0
TEMPERATURES	
Operating Temperature (without mech. load)	-40 °C - 105 °C
WAVE SOLDERING PROCESS	
Soldering Temperature, recommended	260 °C
Peak Soldering Time, recommended	3-4 s
REFLOW PROCESS	
Soldering Temperature, recommended	-
Peak Soldering Time, recommended	-



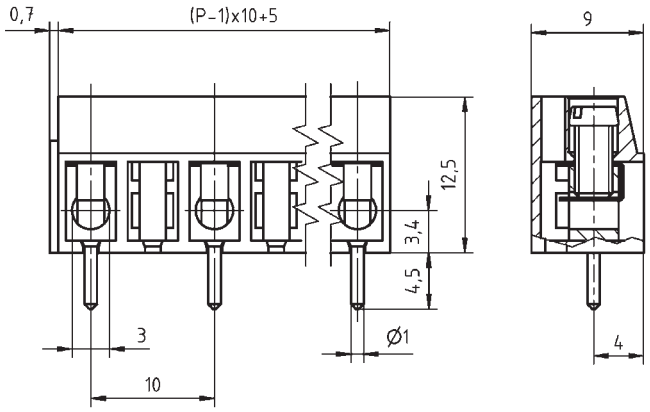

COLOURS[1]

	GREY, RAL 7016		BLACK, RAL 9011
	BLUE, RAL 5015		

ORDER DATA (SPACING 10.0 MM)

Poles	Width (mm)	Article Designation	Article Number	PU
2	15.70	AK100/2DS-10.0-V-GREY	50100020190G	250
3	25.70	AK100/3DS-10.0-V-GREY	50100030190G	250
4	35.70	AK100/4DS-10.0-V-GREY	50100040190F	200
5	45.70	AK100/5DS-10.0-V-GREY	50100050190E	100
6	55.70	AK100/6DS-10.0-V-GREY	50100060190E	100
7	65.70	AK100/7DS-10.0-V-GREY	50100070190D	50
8	75.70	AK100/8DS-10.0-V-GREY	50100080190D	50
9	85.70	AK100/9DS-10.0-V-GREY	50100090190D	50
10	95.70	AK100/10DS-10.0-V-GREY	50100100190D	50
11	105.70	AK100/11DS-10.0-V-GREY	50100110190D	50
12	115.70	AK100/12DS-10.0-V-GREY	50100120190D	50

RATINGS	c UL us			VDE	
Usegroup	B	C	D		
Rated Voltage	300 V	150 V	300 V	1.000 V	
Rated Current	20 A	20 A	10 A	24 A	
Rated Wire Size				min	max
solid	AWG 22-12	AWG 22-12	AWG 22-12	0.5 mm²	2.5 mm²
stranded	AWG 22-12	AWG 22-12	AWG 22-12	0.5 mm²	2.5 mm²
Torque (in.lbs)	3.98	3.98	3.98	4.43	
Screw Size	M3	M3	M3	M3	
Test Voltage	1.6 kV	1.3 kV	1.6 kV	3.5 kV	

[1]Colours according to RAL, there may be variations on colour due to production conditions. Special colours on request.

L'IMPULSION
Retrouvez nous sur
www.limpulsion.fr

AKZ120/..DS-10.16-V-GREY

Spacing 10.16 mm



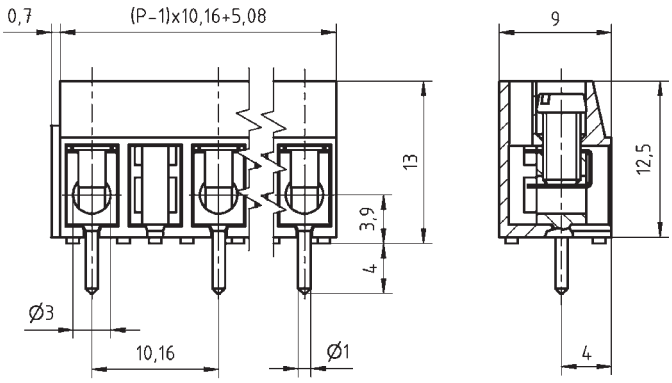

WIRE SIZES	
solid min	0.2 mm²
solid max	2.5 mm²
stranded min	0.2 mm²
stranded max	2.5 mm²
stranded with ferrule min	0.2 mm²
stranded with ferrule max	2.5 mm²
DIMENSIONS	
Stripped Length	7.0 mm
PCB Hole Diameter	1.3 mm
MATERIALS	
Clamp	Brass
Wire Guard	Stainless Steel
Screw	Steel
INSULATING MATERIAL	
Material	PA 6.6
Flammability Class	UL 94 V-0
TEMPERATURES	
Operating Temperature (without mech. load)	-40 °C - 105 °C
WAVE SOLDERING PROCESS	
Soldering Temperature, recommended	260 °C
Peak Soldering Time, recommended	3-4 s
REFLOW PROCESS	
Soldering Temperature, recommended	-
Peak Soldering Time, recommended	-

COLOURS[1]			
	GREY, RAL 7016		BLACK, RAL 9011
	BLUE, RAL 5015		

ORDER DATA (SPACING 10.16 MM)

Poles	Width (mm)	Article Designation	Article Number	PU
2	15.94	AKZ120/2DS-10.16-V-GREY	50120020150G	250
3	26.10	AKZ120/3DS-10.16-V-GREY	50120030150G	250
4	36.26	AKZ120/4DS-10.16-V-GREY	50120040150F	200
5	46.42	AKZ120/5DS-10.16-V-GREY	50120050150E	100
6	56.58	AKZ120/6DS-10.16-V-GREY	50120060150E	100

RATINGS	c UL us			VDE	
Usegroup	B	C	D		
Rated Voltage	300 V	150 V	300 V	1.000 V	
Rated Current	20 A	20 A	10 A	24 A	
Rated Wire Size				min	max
solid	AWG 22-12	AWG 22-12	AWG 22-12	0.5 mm²	2.5 mm²
stranded	AWG 22-12	AWG 22-12	AWG 22-12	0.5 mm²	2.5 mm²
Torque (in.lbs)	3.98	3.98	3.98	4.43	
Screw Size	M3	M3	M3	M3	
Test Voltage	1.6 kV	1.3 kV	1.6 kV	3.5 kV	

[1]Colours according to RAL, there may be variations on colour due to production conditions. Special colours on request.

Spacing 10.0 mm

AK100/..DS-10.0-V-GREY-BL

WIRE SIZES	
solid min	0.2 mm²
solid max	2.5 mm²
stranded min	0.2 mm²
stranded max	2.5 mm²
stranded with ferrule min	0.2 mm²
stranded with ferrule max	2.5 mm²
DIMENSIONS	
Stripped Length	7.0 mm
PCB Hole Diameter	1.3 mm
MATERIALS	
Clamp	Brass
Wire Guard	Stainless Steel
Screw	Steel
INSULATING MATERIAL	
Material	PA 6.6
Flammability Class	UL 94 V-0
TEMPERATURES	
Operating Temperature (without mech. load)	-40 °C - 105 °C
WAVE SOLDERING PROCESS	
Soldering Temperature, recommended	260 °C
Peak Soldering Time, recommended	3-4 s
REFLOW PROCESS	
Soldering Temperature, recommended	-
Peak Soldering Time, recommended	-

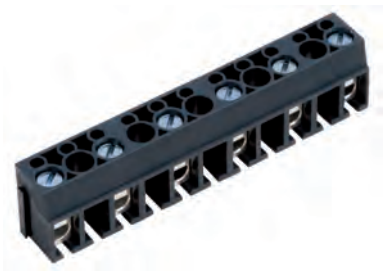

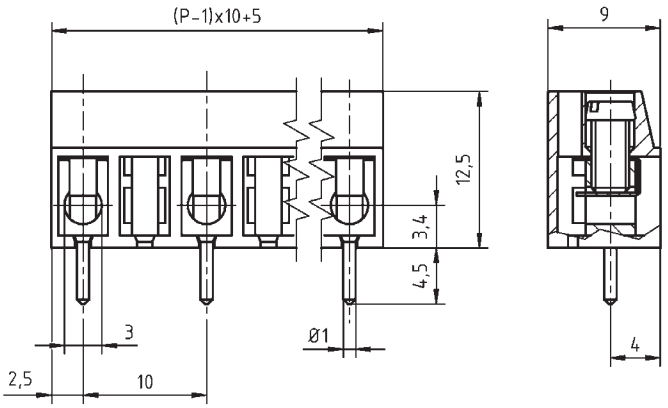

COLOURS[1]
GREY, RAL 7016

ORDER DATA (SPACING 10.0 MM)				
Poles	Width (mm)	Article Designation	Article Number	PU
2	15.00	AK100/2DS-10.0-V-GREY-BL	50100022190G	250
3	25.00	AK100/3DS-10.0-V-GREY-BL	50100032190G	250
4	35.00	AK100/4DS-10.0-V-GREY-BL	50100042190F	200
5	45.00	AK100/5DS-10.0-V-GREY-BL	50100052190E	100
6	55.00	AK100/6DS-10.0-V-GREY-BL	50100062190E	100

RATINGS	c UL us			VDE	
Usegroup	B	C	D		
Rated Voltage	300 V	150 V	300 V	1.000 V	
Rated Current	20 A	20 A	10 A	24 A	
Rated Wire Size				min	max
solid	AWG 22-12	AWG 22-12	AWG 22-12	0.5 mm²	2.5 mm²
stranded	AWG 22-12	AWG 22-12	AWG 22-12	0.5 mm²	2.5 mm²
Torque (in.lbs)	3.98	3.98	3.98	4.43	
Screw Size	M3	M3	M3	M3	
Test Voltage	1.6 kV	1.3 kV	1.6 kV	3.5 kV	

[1]Colours according to RAL, there may be variations on colour due to production conditions. Special colours on request.

L'IMPULSION
Retrouvez nous sur
www.limpulsion.fr

AK100/..DS-10.0-H-GREY

Spacing 10.0 mm



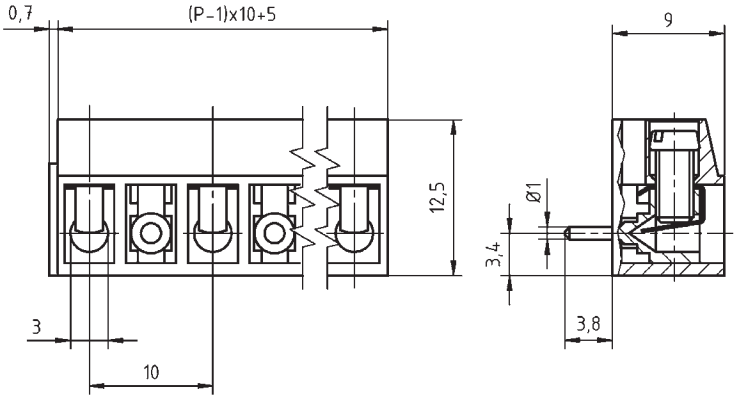

WIRE SIZES	
solid min	0.2 mm²
solid max	2.5 mm²
stranded min	0.2 mm²
stranded max	2.5 mm²
stranded with ferrule min	0.2 mm²
stranded with ferrule max	2.5 mm²
DIMENSIONS	
Stripped Length	6.0 mm
PCB Hole Diameter	1.3 mm
MATERIALS	
Clamp	Brass
Wire Guard	Stainless Steel
Screw	Steel
INSULATING MATERIAL	
Material	PA 6.6
Flammability Class	UL 94 V-0
TEMPERATURES	
Operating Temperature (without mech. load)	-40 °C - 105 °C
WAVE SOLDERING PROCESS	
Soldering Temperature, recommended	260 °C
Peak Soldering Time, recommended	3-4 s
REFLOW PROCESS	
Soldering Temperature, recommended	-
Peak Soldering Time, recommended	-

COLOURS[1]			
	GREY, RAL 7016		BLUE, RAL 5015

ORDER DATA (SPACING 10.0 MM)

Poles	Width (mm)	Article Designation	Article Number	PU
2	15.70	AK100/2DS-10.0-H-GREY	50100020240G	250
3	25.70	AK100/3DS-10.0-H-GREY	50100030240G	250
4	35.70	AK100/4DS-10.0-H-GREY	50100040240F	200
5	45.70	AK100/5DS-10.0-H-GREY	50100050240E	100
6	55.70	AK100/6DS-10.0-H-GREY	50100060240E	100
7	65.70	AK100/7DS-10.0-H-GREY	50100070240D	50
8	75.70	AK100/8DS-10.0-H-GREY	50100080240D	50
9	85.70	AK100/9DS-10.0-H-GREY	50100090240D	50
10	95.70	AK100/10DS-10.0-H-GREY	50100100240D	50
11	105.70	AK100/11DS-10.0-H-GREY	50100110240D	50
12	115.70	AK100/12DS-10.0-H-GREY	50100120240D	50

RATINGS	c UL us			VDE	
Usegroup	B	C	D		
Rated Voltage	300 V	150 V	300 V	1.000 V	
Rated Current	20 A	20 A	10 A	24 A	
Rated Wire Size				min	max
solid	AWG 22-12	AWG 22-12	AWG 22-12	0.5 mm²	2.5 mm²
stranded	AWG 22-12	AWG 22-12	AWG 22-12	0.5 mm²	2.5 mm²
Torque (in.lbs)	3.98	3.98	3.98	4.43	
Screw Size	M3	M3	M3	M3	
Test Voltage	1.6 kV	1.3 kV	1.6 kV	3.5 kV	

[1]Colours according to RAL, there may be variations on colour due to production conditions. Special colours on request.

Spacing 10.16 mm

AKZ120/..DS-10.16-H-GREY

WIRE SIZES	
solid min	0.2 mm²
solid max	2.5 mm²
stranded min	0.2 mm²
stranded max	2.5 mm²
stranded with ferrule min	0.2 mm²
stranded with ferrule max	2.5 mm²
DIMENSIONS	
Stripped Length	7.0 mm
PCB Hole Diameter	1.3 mm
MATERIALS	
Clamp	Brass
Wire Guard	Stainless Steel
Screw	Steel
INSULATING MATERIAL	
Material	PA 6.6
Flammability Class	UL 94 V-0
TEMPERATURES	
Operating Temperature (without mech. load)	-40 °C - 105 °C
WAVE SOLDERING PROCESS	
Soldering Temperature, recommended	260 °C
Peak Soldering Time, recommended	3-4 s
REFLOW PROCESS	
Soldering Temperature, recommended	-
Peak Soldering Time, recommended	-



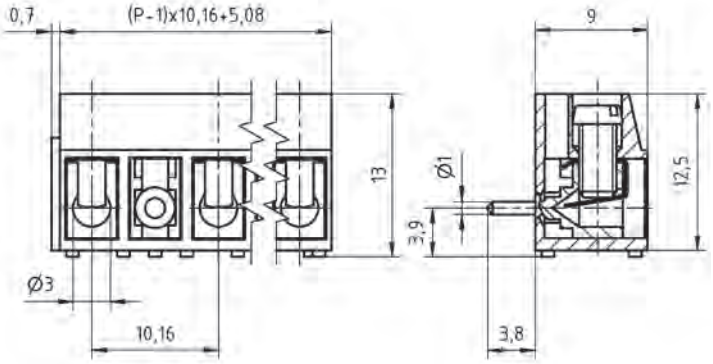

COLOURS[1]			
GREY, RAL 7016		BLUE, RAL 5015	

ORDER DATA (SPACING 10.16 MM)				
Poles	Width (mm)	Article Designation	Article Number	PU
2	15.94	AKZ120/2DS-10.16-H-GREY	50120020170G	250
3	26.10	AKZ120/3DS-10.16-H-GREY	50120030170G	250
4	36.26	AKZ120/4DS-10.16-H-GREY	50120040170F	200
5	46.42	AKZ120/5DS-10.16-H-GREY	50120050170E	100
6	56.58	AKZ120/6DS-10.16-H-GREY	50120060170E	100

RATINGS	cULus			VDE	
Usegroup	B	C	D		
Rated Voltage	300 V	150 V	300 V	1.000 V	
Rated Current	20 A	20 A	10 A	24 A	
Rated Wire Size				min	max
solid	AWG 22-12	AWG 22-12	AWG 22-12	0.5 mm²	2.5 mm²
stranded	AWG 22-12	AWG 22-12	AWG 22-12	0.5 mm²	2.5 mm²
Torque (in.lbs)	3.98	3.98	3.98	4.43	
Screw Size	M3	M3	M3	M3	
Test Voltage	1.6 kV	1.3 kV	1.6 kV	3.5 kV	

[1]Colours according to RAL, there may be variations on colour due to production conditions. Special colours on request.

L'IMPULSION
Retrouvez nous sur
www.limpulsion.fr

AK100/..DS-10.0-H-GREY-BL

Spacing 10.0 mm



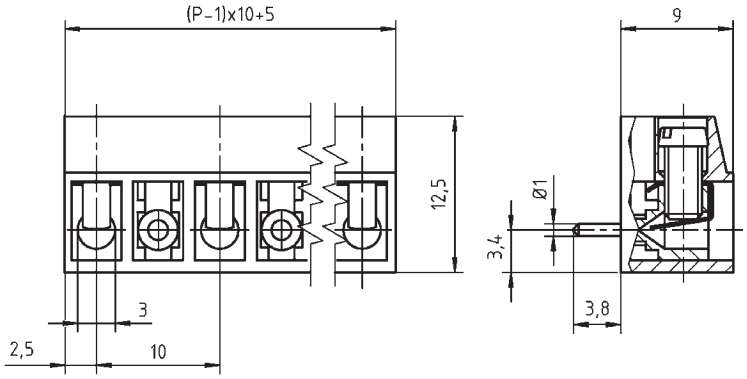

WIRE SIZES	
solid min	0.2 mm²
solid max	2.5 mm²
stranded min	0.2 mm²
stranded max	2.5 mm²
stranded with ferrule min	0.2 mm²
stranded with ferrule max	2.5 mm²
DIMENSIONS	
Stripped Length	6.0 mm
PCB Hole Diameter	1.3 mm
MATERIALS	
Clamp	Brass
Wire Guard	Stainless Steel
Screw	Steel
INSULATING MATERIAL	
Material	PA 6.6
Flammability Class	UL 94 V-0
TEMPERATURES	
Operating Temperature (without mech. load)	-40 °C - 105 °C
WAVE SOLDERING PROCESS	
Soldering Temperature, recommended	260 °C
Peak Soldering Time, recommended	3-4 s
REFLOW PROCESS	
Soldering Temperature, recommended	-
Peak Soldering Time, recommended	-

COLOURS[1]	
	GREY, RAL 7016

ORDER DATA (SPACING 10.0 MM)

Poles	Width (mm)	Article Designation	Article Number	PU
2	15.00	AK100/2DS-10.0-H-GREY-BL	50100022240G	250
3	25.00	AK100/3DS-10.0-H-GREY-BL	50100032240G	250
4	35.00	AK100/4DS-10.0-H-GREY-BL	50100042240F	200
5	45.00	AK100/5DS-10.0-H-GREY-BL	50100052240E	100
6	55.00	AK100/6DS-10.0-H-GREY-BL	50100062240E	100

RATINGS	cULus			VDE	
Usegroup	B	C	D		
Rated Voltage	300 V	150 V	300 V	1.000 V	
Rated Current	20 A	20 A	10 A	24 A	
Rated Wire Size				min	max
solid	AWG 22-12	AWG 22-12	AWG 22-12	0.5 mm²	2.5 mm²
stranded	AWG 22-12	AWG 22-12	AWG 22-12	0.5 mm²	2.5 mm²
Torque (in.lbs)	3.98	3.98	3.98	4.43	
Screw Size	M3	M3	M3	M3	
Test Voltage	1.6 kV	1.3 kV	1.6 kV	3.5 kV	

[1]Colours according to RAL, there may be variations on colour due to production conditions. Special colours on request.

Spacing 10.0 mm / Spacing 10.16 mm

AK500/..DS-10.0-V-GREY
AKZ500/..DS-10.16-V-GREY

WIRE SIZES	
solid min	0.2 mm²
solid max	1.5 mm²
stranded min	0.2 mm²
stranded max	1.5 mm²
stranded with ferrule min	0.2 mm²
stranded with ferrule max	1.5 mm²
DIMENSIONS	
Stripped Length	5.0 mm
PCB Hole Diameter	1.3 mm
MATERIALS	
Clamp	Brass
Wire Guard	Stainless Steel
Screw	Steel
INSULATING MATERIAL	
Material	PA 6.6
Flammability Class	UL 94 V-0
TEMPERATURES	
Operating Temperature (without mech. load)	-40 °C - 105 °C
WAVE SOLDERING PROCESS	
Soldering Temperature, recommended	260 °C
Peak Soldering Time, recommended	3-4 s
REFLOW PROCESS	
Soldering Temperature, recommended	-
Peak Soldering Time, recommended	-



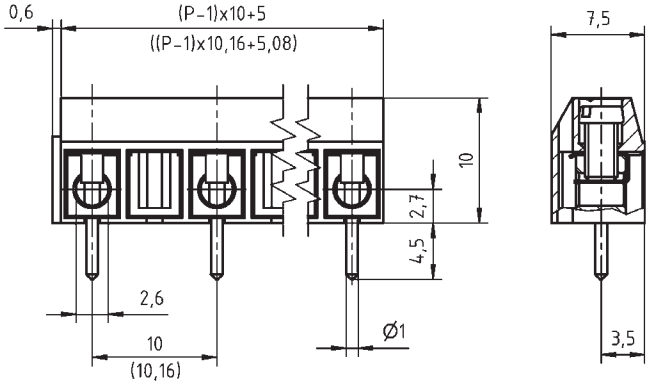

COLOURS[1]

GREY, RAL 7016		BLACK, RAL 9011	
GREEN, RAL 6018		BLUE, RAL 5015	

ORDER DATA (SPACING 10.0 MM)

Poles	Width (mm)	Article Designation	Article Number	PU
2	15.60	AK500/2DS-10.0-V-GREY	50500020211G	250
3	25.60	AK500/3DS-10.0-V-GREY	50500030211G	250
4	35.60	AK500/4DS-10.0-V-GREY	50500040211G	250
5	45.60	AK500/5DS-10.0-V-GREY	50500050211E	100
6	55.60	AK500/6DS-10.0-V-GREY	50500060211E	100
7	65.60	AK500/7DS-10.0-V-GREY	50500070211D	50
8	75.60	AK500/8DS-10.0-V-GREY	50500080211D	50
9	85.60	AK500/9DS-10.0-V-GREY	50500090211D	50
...	...	...	...	...
12	115.60	AK500/12DS-10.0-V-GREY	50500120211D	50

ORDER DATA (SPACING 10.16 MM)

Poles	Width (mm)	Article Designation	Article Number	PU
2	15.84	AKZ500/2DS-10.16-V-GREY	50500020224G	250
3	26.00	AKZ500/3DS-10.16-V-GREY	50500030224G	250
4	36.16	AKZ500/4DS-10.16-V-GREY	50500040224G	250
5	46.32	AKZ500/5DS-10.16-V-GREY	50500050224E	100
6	56.48	AKZ500/6DS-10.16-V-GREY	50500060224E	100
7	66.64	AKZ500/7DS-10.16-V-GREY	50500070224D	50
8	76.80	AKZ500/8DS-10.16-V-GREY	50500080224D	50
9	86.96	AKZ500/9DS-10.16-V-GREY	50500090224D	50
...	...	...	...	...
12	117.44	AKZ500/12DS-10.16-V-GREY	50500120224D	50

RATINGS	c UL us			VDE	
Usegroup	B	C	D		
Rated Voltage	300 V	150 V	300 V	1.000 V	
Rated Current	15 A	15 A	10 A	17.5 A	
Rated Wire Size				min	max
solid	AWG 22-14	AWG 22-14	AWG 22-14	0.5 mm²	1.5 mm²
stranded	AWG 22-14	AWG 22-14	AWG 22-14	0.5 mm²	1.5 mm²
Torque (in.lbs)	3.54	3.54	3.54	3.54	
Screw Size	M2.6	M2.6	M2.6	M2.6	
Test Voltage	1.6 kV	1.3 kV	1.6 kV	3.5 kV	

[1]Colours according to RAL, there may be variations on colour due to production conditions. Special colours on request.

L'IMPULSION
Retrouvez nous sur
www.limpulsion.fr

AK500/..DS-10.0-V-GREY-BL

Spacing 10.0 mm



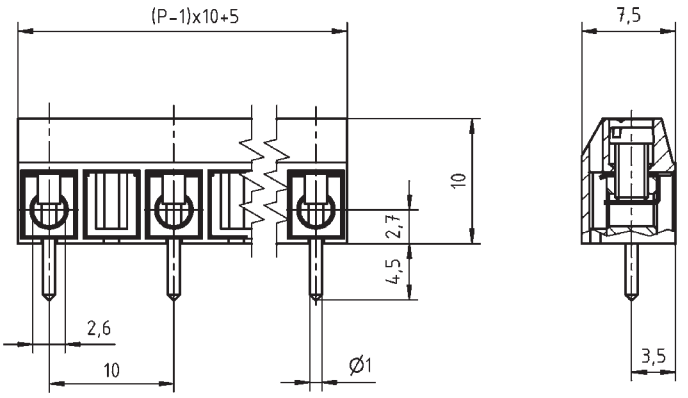

WIRE SIZES	
solid min	0.2 mm²
solid max	1.5 mm²
stranded min	0.2 mm²
stranded max	1.5 mm²
stranded with ferrule min	0.2 mm²
stranded with ferrule max	1.5 mm²
DIMENSIONS	
Stripped Length	5.0 mm
PCB Hole Diameter	1.3 mm
MATERIALS	
Clamp	Brass
Wire Guard	Stainless Steel
Screw	Steel
INSULATING MATERIAL	
Material	PA 6.6
Flammability Class	UL 94 V-0
TEMPERATURES	
Operating Temperature (without mech. load)	-40 °C - 105 °C
WAVE SOLDERING PROCESS	
Soldering Temperature, recommended	260 °C
Peak Soldering Time, recommended	3-4 s
REFLOW PROCESS	
Soldering Temperature, recommended	-
Peak Soldering Time, recommended	-

COLOURS[1]			
	GREY, RAL 7016		BLACK, RAL 9011
	GREEN, RAL 6018		

ORDER DATA (SPACING 10.0 MM)

Poles	Width (mm)	Article Designation	Article Number	PU
2	15.00	AK500/2DS-10.0-V-GREY-BL	50500023211G	250
3	25.00	AK500/3DS-10.0-V-GREY-BL	50500033211G	250
4	35.00	AK500/4DS-10.0-V-GREY-BL	50500043211G	250
5	45.00	AK500/5DS-10.0-V-GREY-BL	50500053211E	100
6	55.00	AK500/6DS-10.0-V-GREY-BL	50500063211E	100

RATINGS	cULus			VDE	
Usegroup	B	C	D		
Rated Voltage	300 V	150 V	300 V	1.000 V	
Rated Current	15 A	15 A	10 A	17.5 A	
Rated Wire Size				min	max
solid	AWG 22-14	AWG 22-14	AWG 22-14	0.5 mm²	1.5 mm²
stranded	AWG 22-14	AWG 22-14	AWG 22-14	0.5 mm²	1.5 mm²
Torque (in.lbs)	3.54	3.54	3.54	3.54	
Screw Size	M2.6	M2.6	M2.6	M2.6	
Test Voltage	1.6 kV	1.3 kV	1.6 kV	3.5 kV	

[1]Colours according to RAL, there may be variations on colour due to production conditions. Special colours on request.

Spacing 10.0 mm / Spacing 10.16 mm

AK500/..DS-10.0-H-GREY
AKZ500/..DS-10.16-H-GREY

WIRE SIZES	
solid min	0.2 mm²
solid max	1.5 mm²
stranded min	0.2 mm²
stranded max	1.5 mm²
stranded with ferrule min	0.2 mm²
stranded with ferrule max	1.5 mm²
DIMENSIONS	
Stripped Length	5.0 mm
PCB Hole Diameter	1.3 mm
MATERIALS	
Clamp	Brass
Wire Guard	Stainless Steel
Screw	Steel
INSULATING MATERIAL	
Material	PA 6.6
Flammability Class	UL 94 V-0
TEMPERATURES	
Operating Temperature (without mech. load)	-40 °C - 105 °C
WAVE SOLDERING PROCESS	
Soldering Temperature, recommended	260 °C
Peak Soldering Time, recommended	3-4 s
REFLOW PROCESS	
Soldering Temperature, recommended	-
Peak Soldering Time, recommended	-



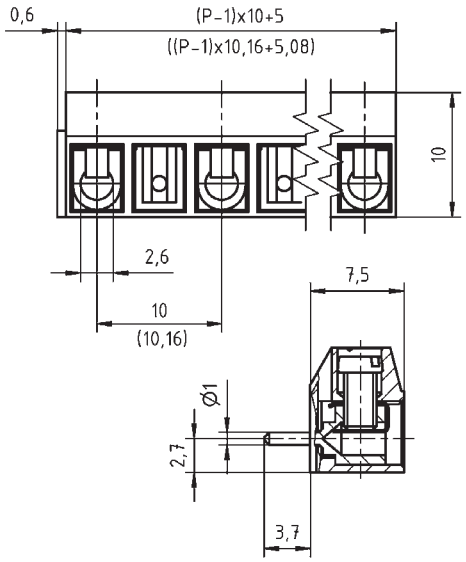

COLOURS[1]

■	GREY, RAL 7016	■	BLUE, RAL 5015

ORDER DATA (SPACING 10.0 MM)

Poles	Width (mm)	Article Designation	Article Number	PU
2	15.60	AK500/2DS-10.0-H-GREY	50500020241G	250
3	25.60	AK500/3DS-10.0-H-GREY	50500030241G	250
4	35.60	AK500/4DS-10.0-H-GREY	50500040241G	250
5	45.60	AK500/5DS-10.0-H-GREY	50500050241E	100
6	55.60	AK500/6DS-10.0-H-GREY	50500060241E	100
7	65.60	AK500/7DS-10.0-H-GREY	50500070241D	50
8	75.60	AK500/8DS-10.0-H-GREY	50500080241D	50
9	85.60	AK500/9DS-10.0-H-GREY	50500090241D	50
...	...	...	...	...
12	115.60	AK500/12DS-10.0-H-GREY	50500120241D	50

ORDER DATA (SPACING 10.16 MM)

Poles	Width (mm)	Article Designation	Article Number	PU
2	15.84	AKZ500/2DS-10.16-H-GREY	50500020251G	250
3	26.00	AKZ500/3DS-10.16-H-GREY	50500030251G	250
4	36.16	AKZ500/4DS-10.16-H-GREY	50500040251G	250
5	46.32	AKZ500/5DS-10.16-H-GREY	50500050251E	100
6	56.48	AKZ500/6DS-10.16-H-GREY	50500060251E	100
7	66.64	AKZ500/7DS-10.16-H-GREY	50500070251D	50
8	76.80	AKZ500/8DS-10.16-H-GREY	50500080251D	50
9	86.96	AKZ500/9DS-10.16-H-GREY	50500090251D	50
...	...	...	...	...
12	117.44	AKZ500/12DS-10.16-H-GREY	50500120251D	50

RATINGS	cULus			VDE	
Usegroup	B	C	D		
Rated Voltage	300 V	150 V	300 V	1.000 V	
Rated Current	15 A	15 A	10 A	17.5 A	
Rated Wire Size				min	max
solid	AWG 22-14	AWG 22-14	AWG 22-14	0.5 mm²	1.5 mm²
stranded	AWG 22-14	AWG 22-14	AWG 22-14	0.5 mm²	1.5 mm²
Torque (in.lbs)	3.54	3.54	3.54	3.54	
Screw Size	M2.6	M2.6	M2.6	M2.6	
Test Voltage	1.6 kV	1.3 kV	1.6 kV	3.5 kV	

[1]Colours according to RAL, there may be variations on colour due to production conditions. Special colours on request.

L'IMPULSION
Retrouvez nous sur
www.limpulsion.fr

AK500/..DS-10.0-H-GREY-BL

Spacing 10.0 mm



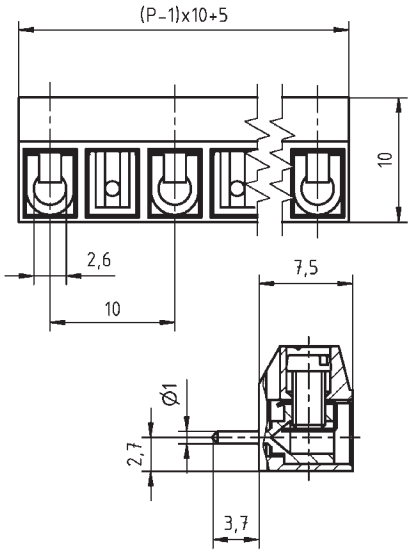

WIRE SIZES	
solid min	0.2 mm²
solid max	1.5 mm²
stranded min	0.2 mm²
stranded max	1.5 mm²
stranded with ferrule min	0.2 mm²
stranded with ferrule max	1.5 mm²
DIMENSIONS	
Stripped Length	5.0 mm
PCB Hole Diameter	1.3 mm
MATERIALS	
Clamp	Brass
Wire Guard	Stainless Steel
Screw	Steel
INSULATING MATERIAL	
Material	PA 6.6
Flammability Class	UL 94 V-0
TEMPERATURES	
Operating Temperature (without mech. load)	-40 °C - 105 °C
WAVE SOLDERING PROCESS	
Soldering Temperature, recommended	260 °C
Peak Soldering Time, recommended	3-4 s
REFLOW PROCESS	
Soldering Temperature, recommended	-
Peak Soldering Time, recommended	-

COLOURS[1]	
	GREY, RAL 7016

ORDER DATA (SPACING 10.0 MM)

Poles	Width (mm)	Article Designation	Article Number	PU
2	15.00	AK500/2DS-10.0-H-GREY-BL	50500023241G	250
3	25.00	AK500/3DS-10.0-H-GREY-BL	50500033241G	250
4	35.00	AK500/4DS-10.0-H-GREY-BL	50500043241G	250
5	45.00	AK500/5DS-10.0-H-GREY-BL	50500053241E	100
6	55.00	AK500/6DS-10.0-H-GREY-BL	50500063241E	100

RATINGS	cULus			VDE	
Usegroup	B	C	D		
Rated Voltage	300 V	150 V	300 V	1.000 V	
Rated Current	15 A	15 A	10 A	17.5 A	
Rated Wire Size				min	max
solid	AWG 22-14	AWG 22-14	AWG 22-14	0.5 mm²	1.5 mm²
stranded	AWG 22-14	AWG 22-14	AWG 22-14	0.5 mm²	1.5 mm²
Torque (in.lbs)	3.54	3.54	3.54	3.54	
Screw Size	M2.6	M2.6	M2.6	M2.6	
Test Voltage	1.6 kV	1.3 kV	1.6 kV	3.5 kV	

[1]Colours according to RAL, there may be variations on colour due to production conditions. Special colours on request.

EK104/..DS-V

NEW

WIRE SIZES	
solid	0.2 mm² - 4.0 mm²
stranded (flexibel)	0.2 mm² - 2.5 mm²
stranded with ferrule	0.2 mm² - 2.5 mm²
DIMENSIONS	
Stripped Length	at least 5.0 mm
PCB Hole Diameter	2.0 mm
MATERIALS	
Clamp	Brass
Wire Guard	Stainless Steel
Screw	Steel
TEMPERATURES	
Operating Temperature (without mech. load)	-40 °C - 105 °C
WAVE SOLDERING PROCESS	
Soldering Temperature, recommended	260 °C
Peak Soldering Time, recommended	3-4 s
REFLOW PROCESS	
Soldering Temperature, recommended	217 °C - 245 °C
Peak Soldering Time, recommended	60 s



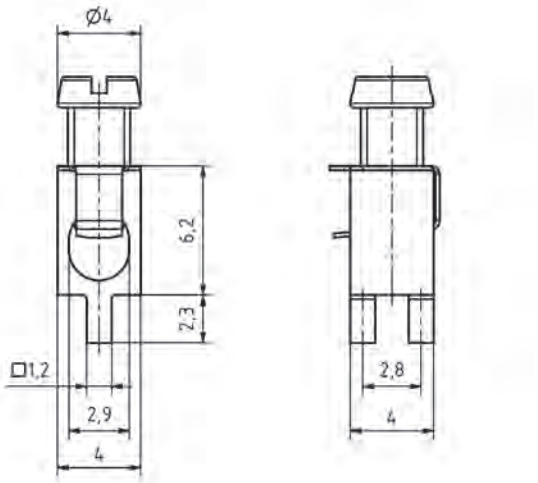

ORDER DATA				
Poles	Width (mm)	Article Designation	Article Number	PU
1		EK104/1DS-V	50104018801H	500

RATINGS	*			**	
Usegroup	B	C	D		
Rated Voltage	-	-	-	-	
Rated Current	20 A	20 A	10 A	32 A	
Rated Wire Size				min	max
solid	AWG 22-14	AWG 22-14	AWG 22-14	0.5 mm²	4.0 mm²
stranded	AWG 22-14	AWG 22-14	AWG 22-14	0.5 mm²	4.0 mm²
Torque (in.lbs)	0.50 Nm	0.50 Nm	0.50 Nm	0.50 Nm	
Screw Size	M3	M3	M3	M3	

*Data similar to UL 1059 (XCFR2.E101811)/CSA 22.2 No. 158 (XCFR8.E101811)
**Data similar to EN 60998

L'IMPULSION
Retrouvez nous sur
www.limpulsion.fr

NEW

EK105/..DS-V



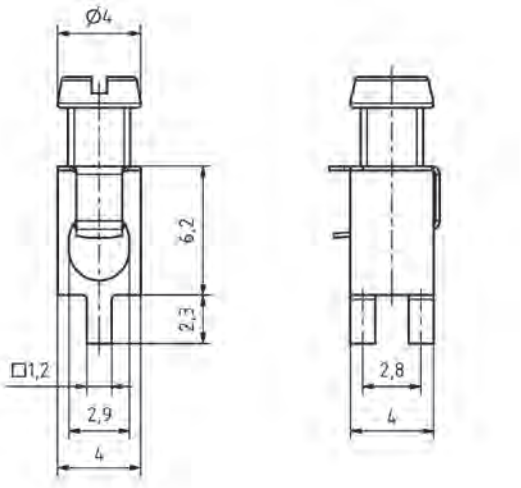

WIRE SIZES	
solid	0.2 mm² - 2.5 mm²
stranded (flexibel)	0.2 mm² - 1.5 mm²
stranded with ferrule	0.2 mm² - 1.5 mm²
DIMENSIONS	
Stripped Length	at least 5.0 mm
PCB Hole Diameter	1.5 mm
MATERIALS	
Clamp	Brass
Wire Guard	Stainless Steel
Screw	Steel
TEMPERATURES	
Operating Temperature (without mech. load)	-40 °C - 105 °C
WAVE SOLDERING PROCESS	
Soldering Temperature, recommended	260 °C
Peak Soldering Time, recommended	3-4 s
REFLOW PROCESS	
Soldering Temperature, recommended	217 °C - 245 °C
Peak Soldering Time, recommended	60 s

ORDER DATA

Poles	Width (mm)	Article Designation	Article Number	PU
1		EK105/1DS-V	50105018803H	500

RATINGS	*			**	
Usegroup	B	C	D		
Rated Voltage	-	-	-	-	
Rated Current	20 A	20 A	10 A	24 A	
Rated Wire Size				min	max
solid	AWG 22-12	AWG 22-12	AWG 22-12	0.2 mm²	2.5 mm²
stranded	AWG 22-12	AWG 22-14	AWG 22-12	0.2 mm²	2.5 mm²
Torque (in.lbs)	0.50 Nm	0.50 Nm	0.50 Nm	0.50 Nm	
Screw Size	M3	M3	M3	M3	

*Data similar to UL 1059 (XCFR2.E101811)/CSA 22.2 No. 158 (XCFR8.E101811)

**Data similar to EN 60998

Spacing 2.54 mm

AKZ692/..-2.54-V-GREEN

WIRE SIZES	
solid min	0.14 mm²
solid max	0.75 mm²
stranded min	0.14 mm²
stranded max	0.75 mm²
stranded with ferrule min	0.14 mm²
stranded with ferrule max	0.34 mm²
DIMENSIONS	
Stripped Length	4.0 mm
PCB Hole Diameter	1.3 mm
MATERIALS	
Clamp	Brass
Screw	Steel
Solder Tab	Brass
INSULATING MATERIAL	
Material	PA 6.6
Flammability Class	UL 94 V-0
TEMPERATURES	
Operating Temperature (without mech. load)	-40 °C - 105 °C
WAVE SOLDERING PROCESS	
Soldering Temperature, recommended	260 °C
Peak Soldering Time, recommended	3-4 s
REFLOW PROCESS	
Soldering Temperature, recommended	-
Peak Soldering Time, recommended	-



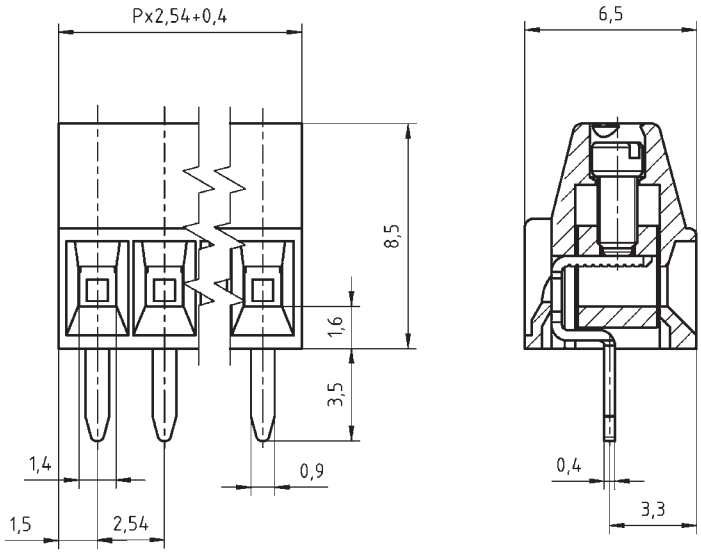

COLOURS[1]

GREEN, RAL 6018

LIGHT GREEN, similar RAL 6018

ORDER DATA (SPACING 2.54 MM)

Poles	Width (mm)	Article Designation	Article Number	PU
2	5.48	AKZ692/2-2.54-V-GREEN	50692020021E	100
3	8.02	AKZ692/3-2.54-V-GREEN	50692030021E	100
4	10.56	AKZ692/4-2.54-V-GREEN	50692040021E	100
5	13.10	AKZ692/5-2.54-V-GREEN	50692050021E	100
6	15.64	AKZ692/6-2.54-V-GREEN	50692060021E	100
7	18.18	AKZ692/7-2.54-V-GREEN	50692070021E	100
8	20.72	AKZ692/8-2.54-V-GREEN	50692080021E	100
9	23.26	AKZ692/9-2.54-V-GREEN	50692090021E	100
10	25.80	AKZ692/10-2.54-V-GREEN	50692100021E	100
11	28.34	AKZ692/11-2.54-V-GREEN	50692110021E	100
12	30.88	AKZ692/12-2.54-V-GREEN	50692120021E	100
13	33.42	AKZ692/13-2.54-V-GREEN	50692130021E	100
14	35.96	AKZ692/14-2.54-V-GREEN	50692140021E	100
15	38.50	AKZ692/15-2.54-V-GREEN	50692150021E	100
16	41.04	AKZ692/16-2.54-V-GREEN	50692160021E	100
17	43.58	AKZ692/17-2.54-V-GREEN	50692170021E	100
18	46.12	AKZ692/18-2.54-V-GREEN	50692180021E	100
19	48.66	AKZ692/19-2.54-V-GREEN	50692190021E	100
20	51.20	AKZ692/20-2.54-V-GREEN	50692200021E	100
21	53.74	AKZ692/21-2.54-V-GREEN	50692210021E	100
22	56.28	AKZ692/22-2.54-V-GREEN	50692220021E	100
23	58.82	AKZ692/23-2.54-V-GREEN	50692230021E	100
24	61.36	AKZ692/24-2.54-V-GREEN	50692240021E	100

RATINGS	c UL us			VDE	
Usegroup	B	C	D		
Rated Voltage	150 V	-	-	130 V	
Rated Current	7 A	-	-	9 A	
Rated Wire Size				min	max
solid	AWG 30-18	-	-	0.14 mm²	0.75 mm²
stranded	AWG 30-18	-	-	0.14 mm²	0.75 mm²
Torque (in.lbs)	0.89	-	-	0.89	
Screw Size	M1.6	-	-	M1.6	
Test Voltage	1.3 kV	-	-	1.25 kV	

[1]Colours according to RAL, there may be variations on colour due to production conditions. Special colours on request.

L'IMPULSION
Retrouvez nous sur
www.limpulsion.fr

AK601/..-3.5-V-GREEN
AKZ601/..-3.81-V-GREEN

Spacing 3.5 mm / Spacing 3.81 mm



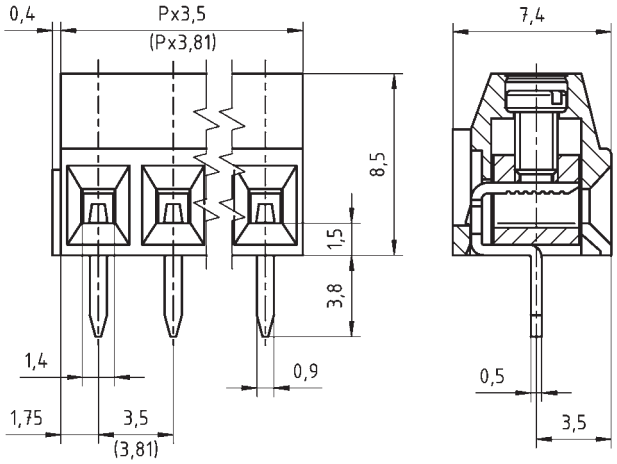

WIRE SIZES	
solid min	0.08 mm²
solid max	1.5 mm²
stranded min	0.08 mm²
stranded max	1.0 mm²
stranded with ferrule min	0.14 mm²
stranded with ferrule max	0.34 mm²
DIMENSIONS	
Stripped Length	6.0 mm
PCB Hole Diameter	1.2 mm
MATERIALS	
Clamp	Brass
Screw	Steel
Solder Tab	Brass
INSULATING MATERIAL	
Material	PA 6.6
Flammability Class	UL 94 V-0
TEMPERATURES	
Operating Temperature (without mech. load)	-40 °C - 105 °C
WAVE SOLDERING PROCESS	
Soldering Temperature, recommended	260 °C
Peak Soldering Time, recommended	3-4 s
REFLOW PROCESS	
Soldering Temperature, recommended	-
Peak Soldering Time, recommended	-

COLOURS[1]

GREEN, RAL 6018

LIGHT GREEN, similar RAL 6018

ACCESSORIES

	Description	Article Number
	Bridge, 2-pole, insulated, BRI/2-7.0/7.62-L7.5-LIGHT GREY	50000000018
	Bridge, 2-pole, angled, BR/2-3.5/3.81-H-L7.5	50000000029
	Bridge, 2-pole, BR/2-3.5/3.81-L7.5	50000000015
	Bridge, 3-pole, BR/3-3.5/3.81-L7.5	50000000016

RATINGS

	c UL us			VDE	
Usegroup	B	C	D		
Rated Voltage	150 V	-	-	130 V	
Rated Current	10 A	-	-	10 A	
Rated Wire Size				min	max
solid	AWG 28-16	-	-	0.2 mm²	1.0 mm²
stranded	AWG 28-16	-	-	0.2 mm²	1.0 mm²
Torque (in.lbs)	1.77	-	-	1.77	
Screw Size	M2	-	-	M2	
Test Voltage	1.3 kV	-	-	1.25 kV	

ORDER DATA (SPACING 3.5 MM)

Poles	Width (mm)	Article Designation	Article Number	PU
2	7.40	AK601/2-3.5-V-GREEN	50601020001F	200
3	10.90	AK601/3-3.5-V-GREEN	50601030001F	200
4	14.40	AK601/4-3.5-V-GREEN	50601040001F	200
5	17.90	AK601/5-3.5-V-GREEN	50601050001F	200
6	21.40	AK601/6-3.5-V-GREEN	50601060001E	100
7	24.90	AK601/7-3.5-V-GREEN	50601070001E	100
8	28.40	AK601/8-3.5-V-GREEN	50601080001E	100
9	31.90	AK601/9-3.5-V-GREEN	50601090001E	100
...	...	...	...	...
24	84.40	AK601/24-3.5-V-GREEN	50601240001D	50

ORDER DATA (SPACING 3.81 MM)

Poles	Width (mm)	Article Designation	Article Number	PU
2	7.71	AKZ601/2-3.81-V-GREEN	50601020021F	200
3	11.52	AKZ601/3-3.81-V-GREEN	50601030021F	200
4	15.33	AKZ601/4-3.81-V-GREEN	50601040021F	200
5	19.14	AKZ601/5-3.81-V-GREEN	50601050021F	200
6	22.95	AKZ601/6-3.81-V-GREEN	50601060021E	100
7	26.76	AKZ601/7-3.81-V-GREEN	50601070021E	100
8	30.57	AKZ601/8-3.81-V-GREEN	50601080021E	100
9	34.38	AKZ601/9-3.81-V-GREEN	50601090021E	100
...	...	...	...	...
24	91.53	AKZ601/24-3.81-V-GREEN	50601240021D	50

[1]Colours according to RAL, there may be variations on colour due to production conditions. Special colours on request.

Spacing 3.81 mm

AKZ602/..-3.81-V-GREEN

WIRE SIZES	
solid min	0.14 mm²
solid max	1.5 mm²
stranded min	0.14 mm²
stranded max	1.0 mm²
stranded with ferrule min	0.25 mm²
stranded with ferrule max	0.5 mm²
DIMENSIONS	
Stripped Length	5.0 mm
PCB Hole Diameter	1.1 mm
MATERIALS	
Clamp	Brass
Screw	Bronze
Solder Tab	Copper Alloy
INSULATING MATERIAL	
Material	PA 6.6
Flammability Class	UL 94 V-0
TEMPERATURES	
Operating Temperature (without mech. load)	-40 °C - 105 °C
WAVE SOLDERING PROCESS	
Soldering Temperature, recommended	260 °C
Peak Soldering Time, recommended	3-4 s
REFLOW PROCESS	
Soldering Temperature, recommended	-
Peak Soldering Time, recommended	-



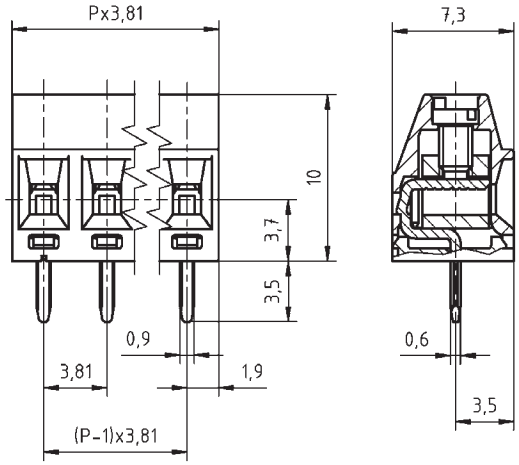

COLOURS[1]

GREEN, RAL 6018	LIGHT GREEN, similar RAL 6018

ORDER DATA (SPACING 3.81 MM)

Poles	Width (mm)	Article Designation	Article Number	PU
2	7.62	AKZ602/2-3.81-V-GREEN	50602020021F	200
3	11.43	AKZ602/3-3.81-V-GREEN	50602030021F	200
4	15.24	AKZ602/4-3.81-V-GREEN	50602040021F	200
5	19.05	AKZ602/5-3.81-V-GREEN	50602050021F	200
6	22.86	AKZ602/6-3.81-V-GREEN	50602060021E	100
7	26.67	AKZ602/7-3.81-V-GREEN	50602070021E	100
8	30.48	AKZ602/8-3.81-V-GREEN	50602080021E	100
9	34.29	AKZ602/9-3.81-V-GREEN	50602090021E	100
10	38.10	AKZ602/10-3.81-V-GREEN	50602100021D	50
11	41.91	AKZ602/11-3.81-V-GREEN	50602110021D	50
12	45.72	AKZ602/12-3.81-V-GREEN	50602120021D	50
13	49.53	AKZ602/13-3.81-V-GREEN	50602130021D	50
14	53.34	AKZ602/14-3.81-V-GREEN	50602140021D	50
15	57.15	AKZ602/15-3.81-V-GREEN	50602150021D	50
16	60.96	AKZ602/16-3.81-V-GREEN	50602160021D	50

ACCESSORIES

	Description	Article Number
	Bridge, 2-pole, insulated, BRI/2-7.0/7.62-L7.5-LIGHT GREY	50000000018
	Bridge, 2-pole, angled, BR/2-3.5/3.81-H-L4.7	50000000019
	Bridge, 2-pole, BR/2-3.5/3.81-L4.7	50000000013
	Bridge, 3-pole, BR/3-3.5/3.81-L4.7	50000000014

RATINGS	cULus			VDE	
Usegroup	B	C	D		
Rated Voltage	300 V	-	-	130 V	
Rated Current	10 A	-	-	13.5 A	
Rated Wire Size				min	max
solid	AWG 30-16	-	-	0.5 mm²	1.0 mm²
stranded	AWG 30-16	-	-	0.5 mm²	1.0 mm²
Torque (in.lbs)	2.21	-	-	1.77	
Screw Size	M2	-	-	M2	
Test Voltage	1.6 kV	-	-	1.25 kV	

[1]Colours according to RAL, there may be variations on colour due to production conditions. Special colours on request.

L'IMPULSION
Retrouvez nous sur
www.limpulsion.fr

AKZ250/..-5.08-V-GREEN

Spacing 5.08 mm



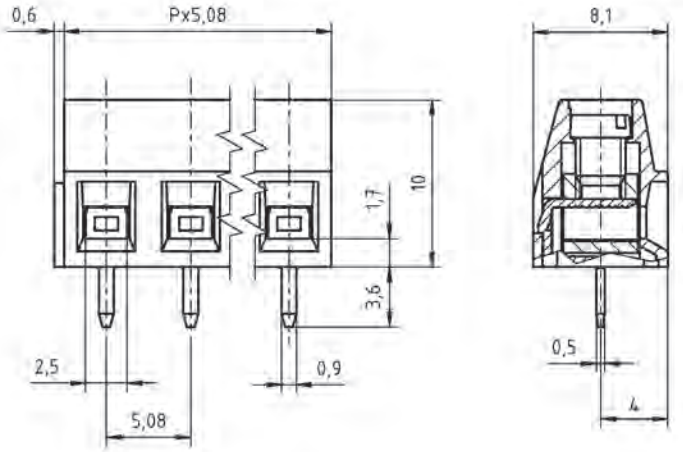

WIRE SIZES	
solid min	0.14 mm²
solid max	1.5 mm²
stranded min	0.14 mm²
stranded max	1.5 mm²
stranded with ferrule min	0.25 mm²
stranded with ferrule max	1.5 mm²
DIMENSIONS	
Stripped Length	6.0 mm
PCB Hole Diameter	1.3 mm
MATERIALS	
Clamp	Brass
Screw	Steel
Solder Tab	Bronze
INSULATING MATERIAL	
Material	PA 6.6
Flammability Class	UL 94 V-0
TEMPERATURES	
Operating Temperature (without mech. load)	-40 °C - 105 °C
WAVE SOLDERING PROCESS	
Soldering Temperature, recommended	260 °C
Peak Soldering Time, recommended	3-4 s
REFLOW PROCESS	
Soldering Temperature, recommended	-
Peak Soldering Time, recommended	-

COLOURS[1]	
GREEN, RAL 6018	LIGHT GREEN, similar RAL 6018

ACCESSORIES

	Description	Article Number
	Bridge, 2-pole, insulated, BRI/2-5.0/5.08-LIGHT GREY	50000000006
	Bridge, 3-pole, insulated, BRI/3-5.0/5.08-LIGHT GREY	50000000007
	Bridge, 2-pole, BR/2-5.0/5.08-L7.0	50000000008

ORDER DATA (SPACING 5.08 MM)

Poles	Width (mm)	Article Designation	Article Number	PU
2	10.76	AKZ250/2-5.08-V-GREEN	50250020001F	200
3	15.84	AKZ250/3-5.08-V-GREEN	50250030001F	200
4	20.92	AKZ250/4-5.08-V-GREEN	50250040001F	200
5	26.00	AKZ250/5-5.08-V-GREEN	50250050001F	200
6	31.08	AKZ250/6-5.08-V-GREEN	50250060001E	100
7	36.16	AKZ250/7-5.08-V-GREEN	50250070001E	100
8	41.24	AKZ250/8-5.08-V-GREEN	50250080001E	100
9	46.32	AKZ250/9-5.08-V-GREEN	50250090001E	100
10	51.40	AKZ250/10-5.08-V-GREEN	50250100001D	50
11	56.48	AKZ250/11-5.08-V-GREEN	50250110001D	50
12	61.56	AKZ250/12-5.08-V-GREEN	50250120001D	50

RATINGS

	c UL us			VDE	
Usegroup	B	C	D		
Rated Voltage	300 V	150 V	300 V	250 V	
Rated Current	15 A	15 A	10 A	13 A	
Rated Wire Size				min	max
solid	AWG 28-14	AWG 28-14	AWG 28-14	0.5 mm²	1.5 mm²
stranded	AWG 28-14	AWG 28-14	AWG 28-14	0.5 mm²	1.5 mm²
Torque (in.lbs)	4.43	4.43	4.43	4.43	
Screw Size	M3	M3	M3	M3	
Test Voltage	1.6 kV	1.3 kV	1.6 kV	2.0 kV	

[1]Colours according to RAL, there may be variations on colour due to production conditions. Special colours on request.

Spacing 5.0 mm / Spacing 5.08 mm

AK300/..-5.0-GREY
AKZ300/..-5.08-GREY

WIRE SIZES	
solid min	0.14 mm²
solid max	2.5 mm²
stranded min	0.14 mm²
stranded max	1.5 mm²
stranded with ferrule min	0.25 mm²
stranded with ferrule max	1.5 mm²
DIMENSIONS	
Stripped Length	7.0 mm
PCB Hole Diameter	1.3 mm
MATERIALS	
Clamp	Brass
Screw	Steel
Solder Tab	Copper Alloy
INSULATING MATERIAL	
Material	PA 6.6
Flammability Class	UL 94 V-0
TEMPERATURES	
Operating Temperature (without mech. load)	-40 °C - 105 °C
WAVE SOLDERING PROCESS	
Soldering Temperature, recommended	260 °C
Peak Soldering Time, recommended	3-4 s
REFLOW PROCESS	
Soldering Temperature, recommended	-
Peak Soldering Time, recommended	-



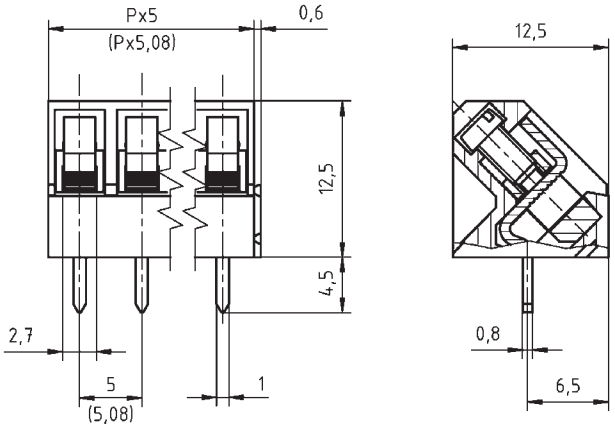

COLOURS[1]

GREY, RAL 7016		GREEN, RAL 6018	
BLUE, RAL 5015			

ORDER DATA (SPACING 5.0 MM)

Poles	Width (mm)	Article Designation	Article Number	PU
2	10.60	AK300/2-5.0-GREY	50300020041F	200
3	15.60	AK300/3-5.0-GREY	50300030041F	200
4	20.60	AK300/4-5.0-GREY	50300040041F	200
5	25.60	AK300/5-5.0-GREY	50300050041F	200
6	30.60	AK300/6-5.0-GREY	50300060041F	200
7	35.60	AK300/7-5.0-GREY	50300070041E	100
8	40.60	AK300/8-5.0-GREY	50300080041E	100
9	45.60	AK300/9-5.0-GREY	50300090041E	100
...	...	...	...	...
12	60.60	AK300/12-5.0-GREY	50300120041D	50

ORDER DATA (SPACING 5.08 MM)

Poles	Width (mm)	Article Designation	Article Number	PU
2	10.76	AKZ300/2-5.08-GREY	50300020141F	200
3	15.84	AKZ300/3-5.08-GREY	50300030141F	200
4	20.92	AKZ300/4-5.08-GREY	50300040141F	200
5	26.00	AKZ300/5-5.08-GREY	50300050141F	200
6	31.08	AKZ300/6-5.08-GREY	50300060141F	200
7	36.16	AKZ300/7-5.08-GREY	50300070141E	100
8	41.24	AKZ300/8-5.08-GREY	50300080141E	100
9	46.32	AKZ300/9-5.08-GREY	50300090141E	100
...	...	...	...	...
12	61.56	AKZ300/12-5.08-GREY	50300120141D	50

ACCESSORIES

	Description	Article Number
	Bridge, 2-pole, insulated, BRI/2-5.0/5.08-LIGHT GREY	50000000006
	Bridge, 3-pole, insulated, BRI/3-5.0/5.08-LIGHT GREY	50000000007
	Bridge, 2-pole, BR/2-5.0/5.08-L7.0	50000000008

RATINGS

	cULus			VDE	
Usegroup	B	C	D		
Rated Voltage	300 V	-	300 V	250 V	
Rated Current	15 A	-	10 A	24 A	
Rated Wire Size				min	max
solid	AWG 22-12	-	AWG 22-12	0.5 mm²	2.5 mm²
stranded	AWG 22-12	-	AWG 22-12	0.5 mm²	1.5 mm²
Torque (in.lbs)	3.54	-	3.54	3.54	
Screw Size	M2.6	-	M2.6	M2.6	
Test Voltage	1.6 kV	-	1.6 kV	2.0 kV	

[1]Colours according to RAL, there may be variations on colour due to production conditions. Special colours on request.

L'IMPULSION
Retrouvez nous sur
www.limpulsion.fr

NEW

AK300/..-5.0-P3.7-BK-BL-HT

Spacing 5.0 mm



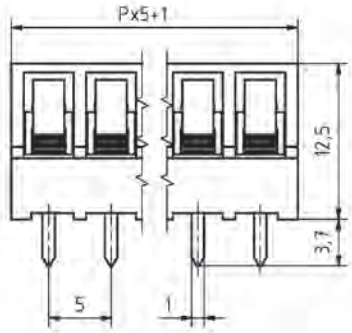

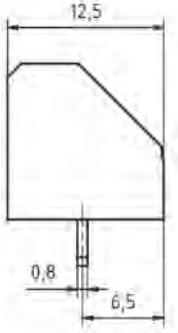



WIRE SIZES	
solid min	0.14 mm²
solid max	2.5 mm²
stranded min	0.14 mm²
stranded max	1.5 mm²
stranded with ferrule min	0.25 mm²
stranded with ferrule max	1.5 mm²
DIMENSIONS	
Stripped Length	7.0 mm
PCB Hole Diameter	1.3 mm
MATERIALS	
Clamp	Brass
Screw	Steel
Solder Tab	Copper Alloy
INSULATING MATERIAL	
Material	PA
Flammability Class	UL 94 V-0
TEMPERATURES	
Operating Temperature (without mech. load)	-40 °C - 105 °C
WAVE SOLDERING PROCESS	
Soldering Temperature, recommended	260 °C
Peak Soldering Time, recommended	3-4 s
REFLOW PROCESS	
Soldering Temperature, recommended	217 - 245 °C
Peak Soldering Time, recommended	60 s

COLOURS[1]	
■	BLACK, RAL 9011

ACCESSORIES[2]

	Description	Article Number
	Bridge, 2-pole, insulated, BRI/2-5.0/5.08-LIGHT GREY	50000000006
	Bridge, 3-pole, insulated, BRI/3-5.0/5.08-LIGHT GREY	50000000007
	Bridge, 2-pole, BR/2-5.0/5.08-L7.0	50000000008

ORDER DATA (SPACING 5.0 MM)

Poles	Width (mm)	Article Designation	Article Number	PU
2	10.60	AK300/2-5.0-P3.7-BK-BL-HT	50300023341F	200
3	15.60	AK300/3-5.0-P3.7-BK-BL-HT	50300033341F	200
4	20.60	AK300/4-5.0-P3.7-BK-BL-HT	50300043341F	200
5	25.60	AK300/5-5.0-P3.7-BK-BL-HT	50300053341F	200
6	30.60	AK300/6-5.0-P3.7-BK-BL-HT	50300063341F	200

RATINGS

	c UL us			VDE	
Usegroup	B	C	D		
Rated Voltage	300 V	-	300 V	250 V	
Rated Current	15 A	-	10 A	24 A	
Rated Wire Size				min	max
solid	AWG 22-12	-	AWG 22-12	0.5 mm²	2.5 mm²
stranded	AWG 22-12	-	AWG 22-12	0.5 mm²	1.5 mm²
Torque (in.lbs)	3.54	-	3.54	3.54	
Screw Size	M2.6	-	M2.6	M2.6	
Test Voltage	1.6 kV	-	1.6 kV	2.0 kV	

[1]Colours according to RAL, there may be variations on colour due to production conditions. [2]The insulated bridges have to be mounted after the reflow soldering process.

Spacing 5.0 mm

AK300/..-5.0-P3.7-BK-BL-HT

NEW

WIRE SIZES	
solid min	0.14 mm²
solid max	2.5 mm²
stranded min	0.14 mm²
stranded max	1.5 mm²
stranded with ferrule min	0.25 mm²
stranded with ferrule max	1.5 mm²
DIMENSIONS	
Stripped Length	7.0 mm
PCB Hole Diameter	1.3 mm
MATERIALS	
Clamp	Brass
Screw	Steel
Solder Tab	Copper Alloy
INSULATING MATERIAL	
Material	PA
Flammability Class	UL 94 V-0
TEMPERATURES	
Operating Temperature (without mech. load)	-40 °C - 105 °C
WAVE SOLDERING PROCESS	
Soldering Temperature, recommended	260 °C
Peak Soldering Time, recommended	3-4 s
REFLOW PROCESS	
Soldering Temperature, recommended	217 - 245 °C
Peak Soldering Time, recommended	60 s

COLOURS[1]

BLACK, RAL 9011

TAPE ON REEL

Poles	Reel (RD/")	Width (R/mm)	Pitch (RP/mm)	Pieces (PCS)
2-6	15	56	24	225

ORDER DATA (SPACING 5.0 MM)

Poles	Width (mm)	Article Designation	Article Number	PU
2	10.60	AK300/2-5.0-P3.7-BK-BL-HT	50300023341R	225
3	15.60	AK300/3-5.0-P3.7-BK-BL-HT	50300033341R	225
4	20.60	AK300/4-5.0-P3.7-BK-BL-HT	50300043341R	225
5	25.60	AK300/5-5.0-P3.7-BK-BL-HT	50300053341R	225
6	30.60	AK300/6-5.0-P3.7-BK-BL-HT	50300063341R	225



Technical Drawing see Page 69

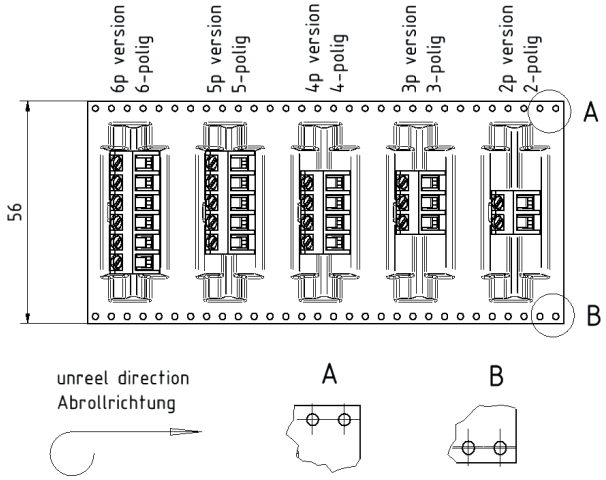

ACCESSORIES[2]

	Description	Article Number
	Bridge, 2-pole, insulated, BRI/2-5.0/5.08-LIGHT GREY	50000000006
	Bridge, 3-pole, insulated, BRI/3-5.0/5.08-LIGHT GREY	50000000007
	Bridge, 2-pole, BR/2-5.0/5.08-L7.0	50000000008

RATINGS

	cULus			VDE	
Usegroup	B	C	D		
Rated Voltage	300 V	-	300 V	250 V	
Rated Current	15 A	-	10 A	24 A	
Rated Wire Size				min	max
solid	AWG 22-12	-	AWG 22-12	0.5 mm²	2.5 mm²
stranded	AWG 22-12	-	AWG 22-12	0.5 mm²	1.5 mm²
Torque (in.lbs)	3.54	-	3.54	3.54	
Screw Size	M2.6	-	M2.6	M2.6	
Test Voltage	1.6 kV	-	1.6 kV	2.0 kV	

[1]Colours according to RAL, there may be variations on colour due to production conditions. [2]The insulated bridges have to be mounted after the reflow soldering process.

L'IMPULSION
Retrouvez nous sur
www.limpulsion.fr

AK340/..-5.0-OL-GREEN

Spacing 5.0 mm



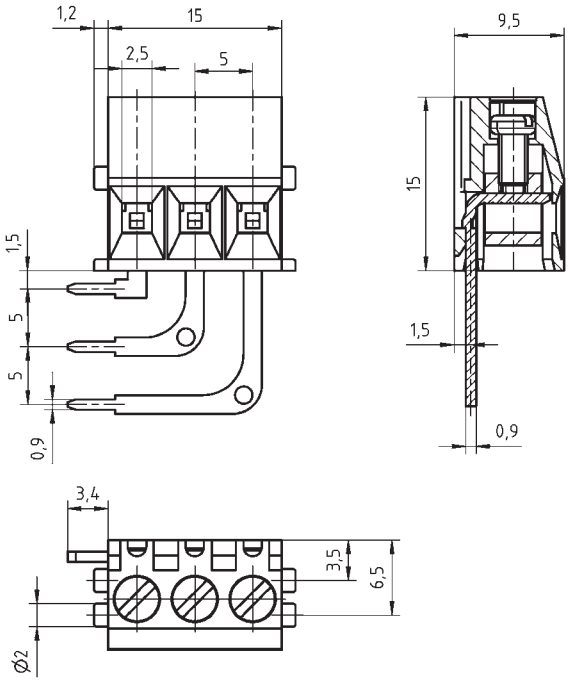

WIRE SIZES	
solid min	0.14 mm²
solid max	4.0 mm²
stranded min	0.14 mm²
stranded max	4.0 mm²
stranded with ferrule min	0.14 mm²
stranded with ferrule max	1.5 mm²
DIMENSIONS	
Stripped Length	7.0 mm
PCB Hole Diameter	1.3 mm
MATERIALS	
Clamp	Brass
Screw	Steel
Solder Tab	Brass
INSULATING MATERIAL	
Material	PA 6.6
Flammability Class	UL 94 V-0
TEMPERATURES	
Operating Temperature (without mech. load)	-40 °C - 105 °C
WAVE SOLDERING PROCESS	
Soldering Temperature, recommended	260 °C
Peak Soldering Time, recommended	3-4 s
REFLOW PROCESS	
Soldering Temperature, recommended	-
Peak Soldering Time, recommended	-

COLOURS[1]			
	GREEN, RAL 6018		BLACK, RAL 9011
	LIGHT GREY, RAL 7035		

ACCESSORIES

	Description	Article Number
	Bridge, 2-pole, insulated, BRI/2-5.0/5.08-LIGHT GREY	50000000006
	Bridge, 3-pole, insulated, BRI/3-5.0/5.08-LIGHT GREY	50000000007
	Bridge, 2-pole, BR/2-5.0/5.08-L7.0	50000000008

ORDER DATA (SPACING 5.0 MM)

Poles	Width (mm)	Article Designation	Article Number	PU
3	17.40	AK340/3-5.0-OL-GREEN	50340030061F	200

RATINGS

	c UL us			VDE	
Usegroup	B	C	D		
Rated Voltage	300 V	-	300 V	250 V	
Rated Current	16 A	-	10 A	16 A	
Rated Wire Size				min	max
solid	AWG 22-12	-	AWG 22-12	0.2 mm²	4.0 mm²
stranded	AWG 22-12	-	AWG 22-12	0.2 mm²	2.5 mm²
Torque (in.lbs)	3.54	-	3.54	3.54	
Screw Size	M2.5	-	M2.5	M2.5	
Test Voltage	1.6 kV	-	1.6 kV	2.0 kV	

[1]Colours according to RAL, there may be variations on colour due to production conditions. Special colours on request.

Spacing 5.0 mm

AK340/..-5.0-OR-GREEN

WIRE SIZES	
solid min	0.14 mm²
solid max	4.0 mm²
stranded min	0.14 mm²
stranded max	4.0 mm²
stranded with ferrule min	0.14 mm²
stranded with ferrule max	1.5 mm²
DIMENSIONS	
Stripped Length	7.0 mm
PCB Hole Diameter	1.3 mm
MATERIALS	
Clamp	Brass
Screw	Steel
Solder Tab	Brass
INSULATING MATERIAL	
Material	PA 6.6
Flammability Class	UL 94 V-0
TEMPERATURES	
Operating Temperature (without mech. load)	-40 °C - 105 °C
WAVE SOLDERING PROCESS	
Soldering Temperature, recommended	260 °C
Peak Soldering Time, recommended	3-4 s
REFLOW PROCESS	
Soldering Temperature, recommended	-
Peak Soldering Time, recommended	-



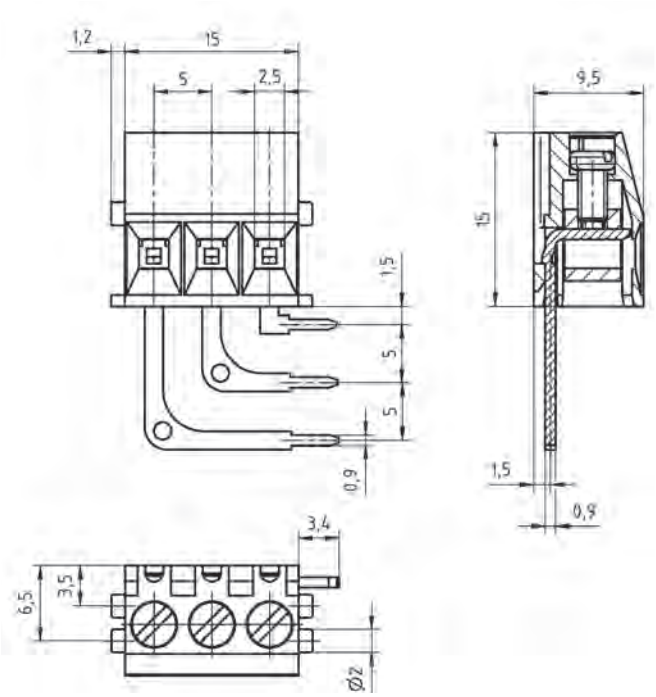

COLOURS[1]

GREEN, RAL 6018		BLACK, RAL 9011	
LIGHT GREY, RAL 7035			

ORDER DATA (SPACING 5.0 MM)

Poles	Width (mm)	Article Designation	Article Number	PU
3	17.40	AK340/3-5.0-OR-GREEN	50340030071F	200

ACCESSORIES

	Description	Article Number
	Bridge, 2-pole, insulated, BRI/2-5.0/5.08-LIGHT GREY	50000000006
	Bridge, 3-pole, insulated, BRI/3-5.0/5.08-LIGHT GREY	50000000007
	Bridge, 2-pole, BR/2-5.0/5.08-L7.0	50000000008

RATINGS

	cULus			VDE	
Usegroup	B	C	D		
Rated Voltage	300 V	-	300 V	250 V	
Rated Current	16 A	-	10 A	16 A	
Rated Wire Size				min	max
solid	AWG 22-12	-	AWG 22-12	0.2 mm²	4.0 mm²
stranded	AWG 22-12	-	AWG 22-12	0.2 mm²	2.5 mm²
Torque (in.lbs)	3.54	-	3.54	3.54	
Screw Size	M2.5	-	M2.5	M2.5	
Test Voltage	1.6 kV	-	1.6 kV	2.0 kV	

[1]Colours according to RAL, there may be variations on colour due to production conditions. Special colours on request.

L'IMPULSION
Retrouvez nous sur
www.limpulsion.fr

AK350/..-5.0-V-GREEN
AKZ350/..-5.08-V-GREEN

Spacing 5.0 mm / Spacing 5.08 mm



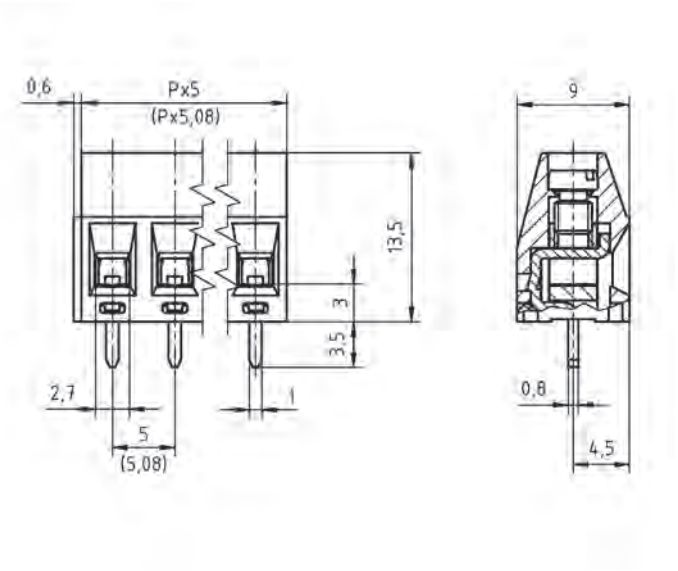

WIRE SIZES	
solid min	0.14 mm²
solid max	2.5 mm²
stranded min	0.14 mm²
stranded max	1.5 mm²
stranded with ferrule min	0.25 mm²
stranded with ferrule max	1.5 mm²
DIMENSIONS	
Stripped Length	6.0 mm
PCB Hole Diameter	1.3 mm
MATERIALS	
Clamp	Brass
Screw	Steel
Solder Tab	Brass
INSULATING MATERIAL	
Material	PA 6.6
Flammability Class	UL 94 V-0
TEMPERATURES	
Operating Temperature (without mech. load)	-40 °C - 105 °C
WAVE SOLDERING PROCESS	
Soldering Temperature, recommended	260 °C
Peak Soldering Time, recommended	3-4 s
REFLOW PROCESS	
Soldering Temperature, recommended	-
Peak Soldering Time, recommended	-

COLOURS[1]

GREEN, RAL 6018	LIGHT GREY, RAL 7035
BLUE, RAL 5015	LIGHT GREEN, similar RAL 6018

ACCESSORIES

	Description	Article Number
	Bridge, 2-pole, insulated, BRI/2-5.0/5.08-LIGHT GREY	50000000006
	Bridge, 3-pole, insulated, BRI/3-5.0/5.08-LIGHT GREY	50000000007
	Bridge, 2-pole, BR/2-5.0/5.08-L7.0	50000000008

RATINGS

	cULus			VDE	
Usegroup	B	C	D		
Rated Voltage	300 V	150 V	300 V	250 V	
Rated Current	15 A	15 A	10 A	17.5 A	
Rated Wire Size				min	max
solid	AWG 22-12	AWG 22-12	AWG 22-12	0.5 mm²	2.5 mm²
stranded	AWG 22-12	AWG 22-12	AWG 22-12	0.5 mm²	1.5 mm²
Torque (in.lbs)	4.43	4.43	4.43	4.43	
Screw Size	M3	M3	M3	M3	
Test Voltage	1.6 kV	1.3 kV	1.6 kV	2.0 kV	

ORDER DATA (SPACING 5.0 MM)

Poles	Width (mm)	Article Designation	Article Number	PU
2	10.60	AK350/2-5.0-V-GREEN	50350020005F	200
3	15.60	AK350/3-5.0-V-GREEN	50350030005F	200
4	20.60	AK350/4-5.0-V-GREEN	50350040005F	200
5	25.60	AK350/5-5.0-V-GREEN	50350050005F	200
6	30.60	AK350/6-5.0-V-GREEN	50350060005E	100
7	35.60	AK350/7-5.0-V-GREEN	50350070005E	100
8	40.60	AK350/8-5.0-V-GREEN	50350080005E	100
9	45.60	AK350/9-5.0-V-GREEN	50350090005E	100
...	...	...	...	...
12	60.60	AK350/12-5.0-V-GREEN	50350120005D	50

ORDER DATA (SPACING 5.08 MM)

Poles	Width (mm)	Article Designation	Article Number	PU
2	10.76	AKZ350/2-5.08-V-GREEN	50350020001F	200
3	15.84	AKZ350/3-5.08-V-GREEN	50350030001F	200
4	20.92	AKZ350/4-5.08-V-GREEN	50350040001F	200
5	26.00	AKZ350/5-5.08-V-GREEN	50350050001F	200
6	31.08	AKZ350/6-5.08-V-GREEN	50350060001E	100
7	36.16	AKZ350/7-5.08-V-GREEN	50350070001E	100
8	41.24	AKZ350/8-5.08-V-GREEN	50350080001E	100
9	46.32	AKZ350/9-5.08-V-GREEN	50350090001E	100
...	...	...	...	...
12	61.56	AKZ350/12-5.08-V-GREEN	50350120001D	50

[1]Colours according to RAL, there may be variations on colour due to production conditions. Special colours on request.

Spacing 5.0 mm / Spacing 5.08 mm

AK350/..-5.0-V-GREEN-HC
AKZ350/..-5.08-V-GREEN-HC

WIRE SIZES	
solid min	0.14 mm²
solid max	2.5 mm²
stranded min	0.14 mm²
stranded max	1.5 mm²
stranded with ferrule min	0.25 mm²
stranded with ferrule max	1.5 mm²
DIMENSIONS	
Stripped Length	6.0 mm
PCB Hole Diameter	1.3 mm
MATERIALS	
Clamp	Brass
Screw	Steel
Solder Tab	Copper Alloy
INSULATING MATERIAL	
Material	PA 6.6
Flammability Class	UL 94 V-0
TEMPERATURES	
Operating Temperature (without mech. load)	-40 °C - 105 °C
WAVE SOLDERING PROCESS	
Soldering Temperature, recommended	260 °C
Peak Soldering Time, recommended	3-4 s
REFLOW PROCESS	
Soldering Temperature, recommended	-
Peak Soldering Time, recommended	-



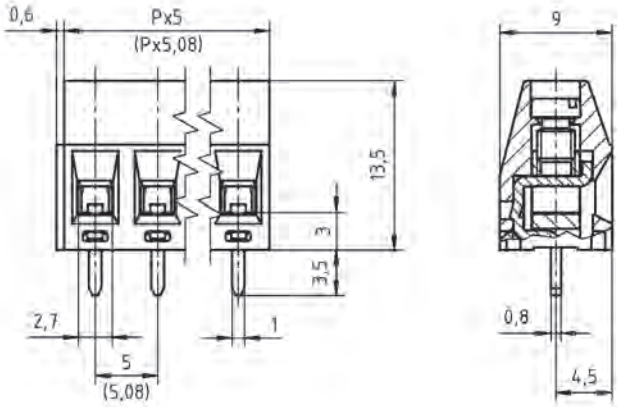

COLOURS[1]

	GREEN, RAL 6018		LIGHT GREY, RAL 7035
	BLUE, RAL 5015		LIGHT GREEN, similar RAL 6018

ORDER DATA (SPACING 5.0 MM)

Poles	Width (mm)	Article Designation	Article Number	PU
2	10.60	AK350/2-5.0-V-GREEN-HC	50350020095F	200
3	15.60	AK350/3-5.0-V-GREEN-HC	50350030095F	200
4	20.60	AK350/4-5.0-V-GREEN-HC	50350040095F	200
5	25.60	AK350/5-5.0-V-GREEN-HC	50350050095F	200
6	30.60	AK350/6-5.0-V-GREEN-HC	50350060095E	100
7	35.60	AK350/7-5.0-V-GREEN-HC	50350070095E	100
8	40.60	AK350/8-5.0-V-GREEN-HC	50350080095E	100
9	45.60	AK350/9-5.0-V-GREEN-HC	50350090095E	100
...	...	...	...	...
12	60.60	AK350/12-5.0-V-GREEN-HC	50350120095D	50

ORDER DATA (SPACING 5.08 MM)

Poles	Width (mm)	Article Designation	Article Number	PU
2	10.76	AKZ350/2-5.08-V-GREEN-HC	50350020091F	200
3	15.84	AKZ350/3-5.08-V-GREEN-HC	50350030091F	200
4	20.92	AKZ350/4-5.08-V-GREEN-HC	50350040091F	200
5	26.00	AKZ350/5-5.08-V-GREEN-HC	50350050091F	200
6	31.08	AKZ350/6-5.08-V-GREEN-HC	50350060091E	100
7	36.16	AKZ350/7-5.08-V-GREEN-HC	50350070091E	100
8	41.24	AKZ350/8-5.08-V-GREEN-HC	50350080091E	100
9	46.32	AKZ350/9-5.08-V-GREEN-HC	50350090091E	100
...	...	...	...	...
12	61.56	AKZ350/12-5.08-V-GREEN-HC	50350120091D	50

ACCESSORIES

	Description	Article Number
	Bridge, 2-pole, insulated, BRI/2-5.0/5.08-LIGHT GREY	50000000006
	Bridge, 3-pole, insulated, BRI/3-5.0/5.08-LIGHT GREY	50000000007
	Bridge, 2-pole, BR/2-5.0/5.08-L7.0	50000000008

RATINGS	cULus			VDE	
Usegroup	B	C	D		
Rated Voltage	300 V	150 V	300 V	250 V	
Rated Current	19 A	19 A	10 A	24 A	
Rated Wire Size				min	max
solid	AWG 22-12	AWG 22-12	AWG 22-12	0.5 mm²	2.5 mm²
stranded	AWG 22-12	AWG 22-12	AWG 22-12	0.5 mm²	1.5 mm²
Torque (in.lbs)	4.43	4.43	4.43	4.43	
Screw Size	M3	M3	M3	M3	
Test Voltage	1.6 kV	1.3 kV	1.6 kV	2.0 kV	

[1]Colours according to RAL, there may be variations on colour due to production conditions. Special colours on request.

L'IMPULSION
Retrouvez nous sur
www.limpulsion.fr

AK350/..-5.0-V-GREEN-BR

Spacing 5.0 mm



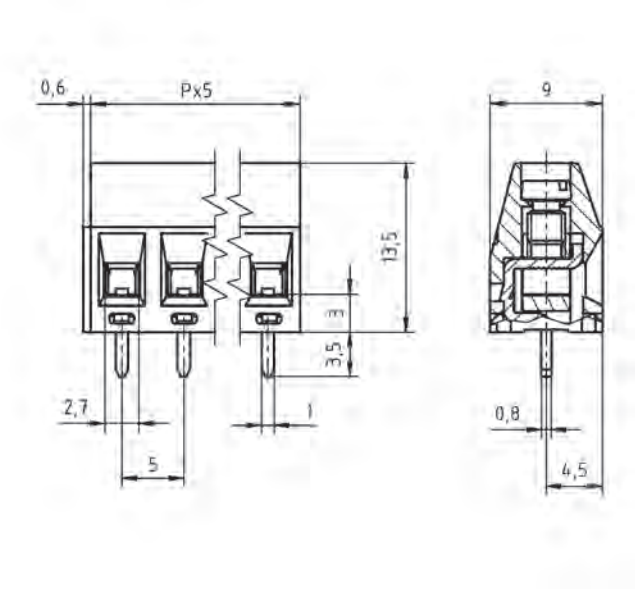

WIRE SIZES	
solid min	0.14 mm²
solid max	2.5 mm²
stranded min	0.14 mm²
stranded max	1.5 mm²
stranded with ferrule min	0.25 mm²
stranded with ferrule max	1.5 mm²
DIMENSIONS	
Stripped Length	6.0 mm
PCB Hole Diameter	1.3 mm
MATERIALS	
Clamp	Brass
Screw	Steel
Solder Tab	Copper Alloy
INSULATING MATERIAL	
Material	PA 6.6
Flammability Class	UL 94 V-0
TEMPERATURES	
Operating Temperature (without mech. load)	-40 °C - 105 °C
WAVE SOLDERING PROCESS	
Soldering Temperature, recommended	260 °C
Peak Soldering Time, recommended	3-4 s
REFLOW PROCESS	
Soldering Temperature, recommended	-
Peak Soldering Time, recommended	-

COLOURS[1]	
	GREEN, RAL 6018

ORDER DATA (SPACING 5.0 MM)

Poles	Width (mm)	Article Designation	Article Number	PU
2	10.60	AK350/2-5.0-V-GREEN-BR	50350020045F	200
3	15.60	AK350/3-5.0-V-GREEN-BR	50350030045F	200
4	20.60	AK350/4-5.0-V-GREEN-BR	50350040045E	100

RATINGS	c UL us			VDE	
Usegroup	B	C	D		
Rated Voltage	300 V	-	300 V	250 V	
Rated Current	15 A	-	10 A	24 A	
Rated Wire Size				min	max
solid	AWG 22-12	-	AWG 22-12	0.5 mm²	2.5 mm²
stranded	AWG 22-12	-	AWG 22-12	0.5 mm²	1.5 mm²
Torque (in.lbs)	4.43	-	4.43	4.43	
Screw Size	M3	-	M3	M3	
Test Voltage	1.6 kV	-	1.6 kV	2.0 kV	

[1]Colours according to RAL, there may be variations on colour due to production conditions. Special colours on request.

Spacing 5.0 mm / Spacing 5.08 mm

AK350/..-5.0-V-GREEN-FP
AKZ350/..-5.08-V-GREEN-FP

NEW

WIRE SIZES	
solid min	0.14 mm²
solid max	2.5 mm²
stranded min	0.14 mm²
stranded max	1.5 mm²
stranded with ferrule min	0.25 mm²
stranded with ferrule max	1.5 mm²
DIMENSIONS	
Stripped Length	6.0 mm
PCB Hole Diameter	1.3 mm
MATERIALS	
Clamp	Brass
Screw	Steel
Solder Tab	Copper Alloy
INSULATING MATERIAL	
Material	PA 6.6
Flammability Class	UL 94 V-0
TEMPERATURES	
Operating Temperature (without mech. load)	-40 °C - 105 °C
WAVE SOLDERING PROCESS	
Soldering Temperature, recommended	260 °C
Peak Soldering Time, recommended	3-4 s
REFLOW PROCESS	
Soldering Temperature, recommended	-
Peak Soldering Time, recommended	-



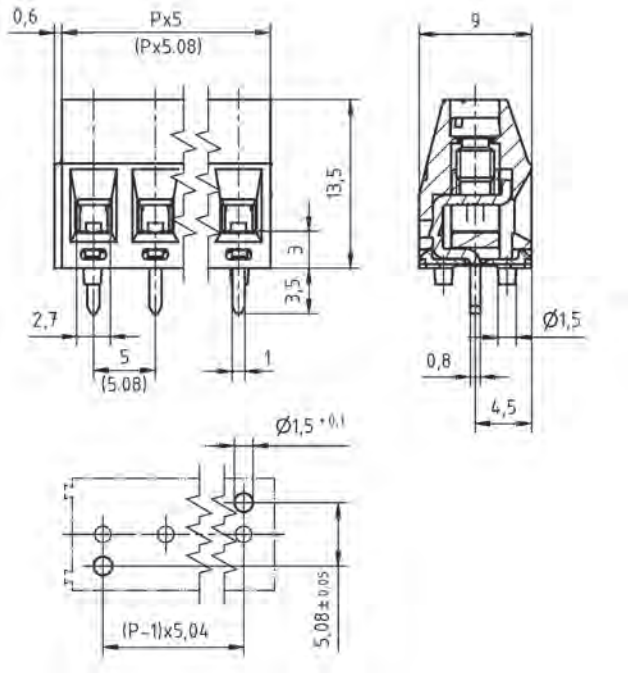

COLOURS[1]	
	GREEN, RAL 6018

ORDER DATA (SPACING 5.0 MM)

Poles	Width (mm)	Article Designation	Article Number	PU
2	10.60	AK350/2-5.0-V-GREEN-FP	50350020015F	200
3	15.60	AK350/3-5.0-V-GREEN-FP	50350030015F	200

ORDER DATA (SPACING 5.08 MM)

Poles	Width (mm)	Article Designation	Article Number	PU
2	10.76	AKZ350/2-5.08-V-GREEN-FP	50350020017F	200
3	15.84	AKZ350/3-5.08-V-GREEN-FP	50350030017F	200

ACCESSORIES

	Description	Article Number
	Bridge, 2-pole, insulated, BRI/2-5.0/5.08-LIGHT GREY	50000000006
	Bridge, 3-pole, insulated, BRI/3-5.0/5.08-LIGHT GREY	50000000007
	Bridge, 2-pole, BR/2-5.0/5.08-L7.0	50000000008

RATINGS	cULus			VDE	
Usegroup	B	C	D		
Rated Voltage	300 V	150 V	300 V	250 V	
Rated Current	15 A	15 A	10 A	17.5 A	
Rated Wire Size				min	max
solid	AWG 22-12	AWG 22-12	AWG 22-12	0.5 mm²	2.5 mm²
stranded	AWG 22-12	AWG 22-12	AWG 22-12	0.5 mm²	1.5 mm²
Torque (in.lbs)	4.43	4.43	4.43	4.43	
Screw Size	M3	M3	M3	M3	
Test Voltage	1.6 kV	1.3 kV	1.6 kV	2.0 kV	

[1]Colours according to RAL, there may be variations on colour due to production conditions. Special colours on request.

L'IMPULSION
Retrouvez nous sur
www.limpulsion.fr

AKZ350/..-5.08-V-P3.5-BK-HT

Spacing 5.08 mm



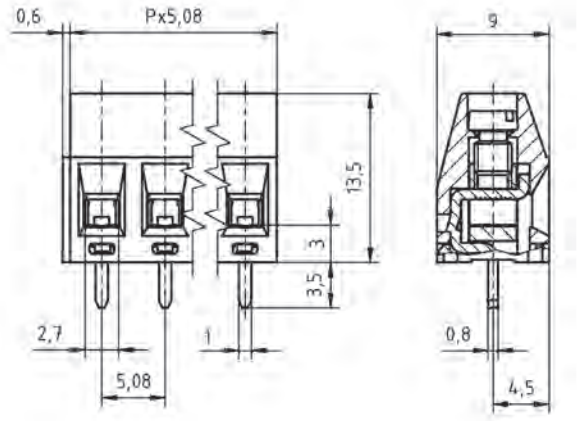

WIRE SIZES	
solid min	0.14 mm²
solid max	2.5 mm²
stranded min	0.14 mm²
stranded max	1.5 mm²
stranded with ferrule min	0.25 mm²
stranded with ferrule max	1.5 mm²
DIMENSIONS	
Stripped Length	6.0 mm
PCB Hole Diameter	1.3 mm
MATERIALS	
Clamp	Brass
Screw	Steel
Solder Tab	Brass
INSULATING MATERIAL	
Material	PPA
Flammability Class	UL 94 V-0
TEMPERATURES	
Operating Temperature (without mech. load)	-40 °C - 105 °C
WAVE SOLDERING PROCESS	
Soldering Temperature, recommended	260 °C
Peak Soldering Time, recommended	3-4 s
REFLOW PROCESS	
Soldering Temperature, recommended	217 °C - 245 °C
Peak Soldering Time, recommended	60 s

COLOURS[1]	
	BLACK, RAL 9011

ACCESSORIES2

	Description	Article Number
	Bridge, 2-pole, insulated, BRI/2-5.0/5.08-LIGHT GREY	50000000006
	Bridge, 3-pole, insulated, BRI/3-5.0/5.08-LIGHT GREY	50000000007
	Bridge, 2-pole, BR/2-5.0/5.08-L7.0	50000000008

ORDER DATA (SPACING 5.08 MM)

Poles	Width (mm)	Article Designation	Article Number	PU
2	10.76	AKZ350/2-5.08-V-P3.5-BK-HT	50350020331F	200
3	15.84	AKZ350/3-5.08-V-P3.5-BK-HT	50350030331F	200
4	20.92	AKZ350/4-5.08-V-P3.5-BK-HT	50350040331F	200
5	26.00	AKZ350/5-5.08-V-P3.5-BK-HT	50350050331F	200
6	31.08	AKZ350/6-5.08-V-P3.5-BK-HT	50350060331E	100
7	36.16	AKZ350/7-5.08-V-P3.5-BK-HT	50350070331E	100
8	41.24	AKZ350/8-5.08-V-P3.5-BK-HT	50350080331E	100
9	46.32	AKZ350/9-5.08-V-P3.5-BK-HT	50350090331E	100
10	51.40	AKZ350/10-5.08-V-P3.5-BK-HT	50350100331D	50
11	56.48	AKZ350/11-5.08-V-P3.5-BK-HT	50350110331D	50
12	61.56	AKZ350/12-5.08-V-P3.5-BK-HT	50350120331D	50

RATINGS

	c UL us			VDE	
Usegroup	B	C	D		
Rated Voltage	300 V	150 V	300 V	250 V	
Rated Current	15 A	15 A	10 A	17.5 A	
Rated Wire Size				min	max
solid	AWG 22-12	AWG 22-12	AWG 22-12	0.5 mm²	2.5 mm²
stranded	AWG 22-12	AWG 22-12	AWG 22-12	0.5 mm²	1.5 mm²
Torque (in.lbs)	4.43	4.43	4.43	4.43	
Screw Size	M3	M3	M3	M3	
Test Voltage	1.6 kV	1.3 kV	1.6 kV	2.0 kV	

[1]Colours according to RAL, there may be variations on colour due to production conditions. 2The insulated bridges have to be mounted after the reflow soldering process.

Spacing 5.08 mm

AKZ350/..-5.08-V-P3.5-BK-HT

NEW

WIRE SIZES	
solid min	0.14 mm²
solid max	2.5 mm²
stranded min	0.14 mm²
stranded max	1.5 mm²
stranded with ferrule min	0.25 mm²
stranded with ferrule max	1.5 mm²
DIMENSIONS	
Stripped Length	6.0 mm
PCB Hole Diameter	1.3 mm
MATERIALS	
Clamp	Brass
Screw	Steel
Solder Tab	Copper Alloy
INSULATING MATERIAL	
Material	PPA
Flammability Class	UL 94 V-0
TEMPERATURES	
Operating Temperature (without mech. load)	-40 °C - 105 °C
WAVE SOLDERING PROCESS	
Soldering Temperature, recommended	265 °C
Peak Soldering Time, recommended	3-4 s
REFLOW PROCESS	
Soldering Temperature, recommended	217 °C - 245 °C
Peak Soldering Time, recommended	60 s



Technical Drawing see page 76

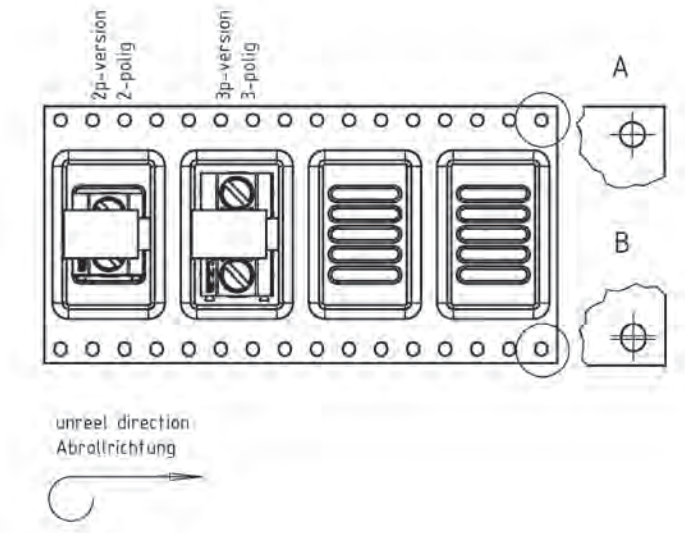

COLOURS[1]

BLACK, RAL 9011

TAPE-ON-REEL

Poles	Reel (RD /")	Width (R/mm)	Pitch (RP/mm)	Pieces (PCS)
2-3	13	32	16	205

ORDER DATA (SPACING 5.08 MM)

Poles	Width (mm)	Article Designation	Article Number	PU
2	10.76	AKZ350/2-5.08-V-P3.5-BK-HT	50350020331R	205
3	15.84	AKZ350/3-5.08-V-P3.5-BK-HT	50350030331R	205

ACCESSORIES[2]

	Description	Article Number
	Bridge, 2-pole, insulated, BRI/2-5.0/5.08-LIGHT GREY	50000000006
	Bridge, 3-pole, insulated, BRI/3-5.0/5.08-LIGHT GREY	50000000007
	Bridge, 2-pole, BR/2-5.0/5.08-L7.0	50000000008

RATINGS	cULus			VDE	
Usegroup	B	C	D		
Rated Voltage	300 V	150 V	300 V	250 V	
Rated Current	15 A	15 A	10 A	17.5 A	
Rated Wire Size				min	max
solid	AWG 22-12	AWG 22-12	AWG 22-12	0.5 mm²	2.5 mm²
stranded	AWG 22-12	AWG 22-12	AWG 22-12	0.5 mm²	1.5 mm²
Torque (in.lbs)	4.43	4.43	4.43	4.43	
Screw Size	M3	M3	M3	M3	
Test Voltage	1.6 kV	1.3 kV	1.6 kV	2.0 kV	

[1]Colours according to RAL, there may be variations on colour due to production conditions. [2]The insulated bridges have to be mounted after the reflow soldering process.

L'IMPULSION Retrouvez nous sur www.limpulsion.fr

AKZ350/..-5.08-V-P3.5-BK-FP-HT

Spacing 5.08 mm



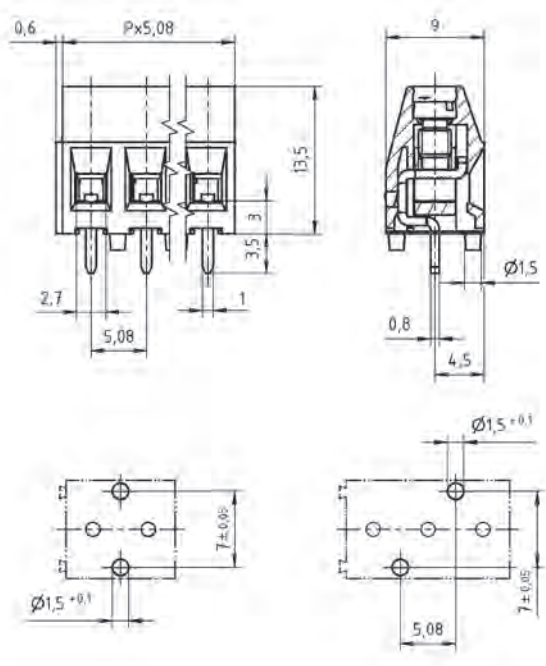

WIRE SIZES	
solid min	0.14 mm²
solid max	2.5 mm²
stranded min	0.14 mm²
stranded max	1.5 mm²
stranded with ferrule min	0.25 mm²
stranded with ferrule max	1.5 mm²
DIMENSIONS	
Stripped Length	6.0 mm
PCB Hole Diameter	1.3 mm
MATERIALS	
Clamp	Brass
Screw	Steel
Solder Tab	Brass
INSULATING MATERIAL	
Material	PPA
Flammability Class	UL 94 V-0
TEMPERATURES	
Operating Temperature (without mech. load)	-40 °C - 105 °C
WAVE SOLDERING PROCESS	
Soldering Temperature, recommended	260 °C
Peak Soldering Time, recommended	3-4 s
REFLOW PROCESS	
Soldering Temperature, recommended	217 °C - 245 °C
Peak Soldering Time, recommended	60 s

COLOURS[1]	
	BLACK, RAL 9011

ACCESSORIES[2]

	Description	Article Number
	Bridge, 2-pole, insulated, BRI/2-5.0/5.08-LIGHT GREY	50000000006
	Bridge, 3-pole, insulated, BRI/3-5.0/5.08-LIGHT GREY	50000000007
	Bridge, 2-pole, BR/2-5.0/5.08-L7.0	50000000008

ORDER DATA (SPACING 5.08 MM)

Poles	Width (mm)	Article Designation	Article Number	PU
2	10.76	AKZ350/2-5.08-V-P3.5-BK-FP-HT	50350020937F	200
3	15.84	AKZ350/3-5.08-V-P3.5-BK-FP-HT	50350030937F	200
4	20.92	AKZ350/4-5.08-V-P3.5-BK-FP-HT	50350040937F	200
5	26.00	AKZ350/5-5.08-V-P3.5-BK-FP-HT	50350050937F	200
6	31.08	AKZ350/6-5.08-V-P3.5-BK-FP-HT	50350060937E	100
7	36.16	AKZ350/7-5.08-V-P3.5-BK-FP-HT	50350070937E	100
8	41.24	AKZ350/8-5.08-V-P3.5-BK-FP-HT	50350080937E	100
9	46.32	AKZ350/9-5.08-V-P3.5-BK-FP-HT	50350090937E	100
10	51.40	AKZ350/10-5.08-V-P3.5-BK-FP-HT	50350100937E	100
11	56.48	AKZ350/11-5.08-V-P3.5-BK-FP-HT	50350110937D	50
12	61.56	AKZ350/12-5.08-V-P3.5-BK-FP-HT	50350120937D	50

RATINGS	cULus			VDE	
Usegroup	B	C	D		
Rated Voltage	300 V	150 V	300 V	250 V	
Rated Current	15 A	15 A	10 A	17.5 A	
Rated Wire Size				min	max
solid	AWG 22-12	AWG 22-12	AWG 22-12	0.5 mm²	2.5 mm²
stranded	AWG 22-12	AWG 22-12	AWG 22-12	0.5 mm²	1.5 mm²
Torque (in.lbs)	4.43	4.43	4.43	4.43	
Screw Size	M3	M3	M3	M3	
Test Voltage	1.6 kV	1.3 kV	1.6 kV	2.0 kV	

[1]Colours according to RAL, there may be variations on colour due to production conditions. [2]The insulated bridges have to be mounted after the reflow soldering process.

Spacing 5.08 mm

AKZ350/..-5.08-V-P3.5-BK-FP-HT

NEW

WIRE SIZES	
solid min	0.14 mm²
solid max	2.5 mm²
stranded min	0.14 mm²
stranded max	1.5 mm²
stranded with ferrule min	0.25 mm²
stranded with ferrule max	1.5 mm²
DIMENSIONS	
Stripped Length	6.0 mm
PCB Hole Diameter	1.3 mm
MATERIALS	
Clamp	Brass
Screw	Steel
Solder Tab	Brass
INSULATING MATERIAL	
Material	PPA
Flammability Class	UL 94 V-0
TEMPERATURES	
Operating Temperature (without mech. load)	-40 °C - 105 °C
WAVE SOLDERING PROCESS	
Soldering Temperature, recommended	260 °C
Peak Soldering Time, recommended	3-4 s
REFLOW PROCESS	
Soldering Temperature, recommended	217 °C - 245 °C
Peak Soldering Time, recommended	60 s



Technical Drawing see page 78

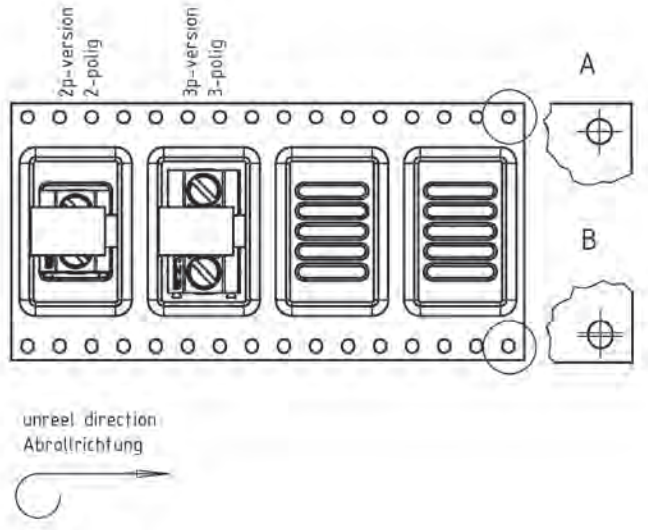

COLOURS[1]

BLACK, RAL 9011

TAPE-ON-REEL

Poles	Reel (RD /")	Width (R/mm)	Pitch (RP/mm)	Pieces (PCS)
2-3	13	32	16	205

ORDER DATA (SPACING 5.08 MM)

Poles	Width (mm)	Article Designation	Article Number	PU
2	10.76	AKZ350/2-5.08-V-P3.5-BK-FP-HT	50350020937R	205
3	15.84	AKZ350/3-5.08-V-P3.5-BK-FP-HT	50350030937R	205

ACCESSORIES[2]

	Description	Article Number
	Bridge, 2-pole, insulated, BRI/2-5.0/5.08-LIGHT GREY	50000000006
	Bridge, 3-pole, insulated, BRI/3-5.0/5.08-LIGHT GREY	50000000007
	Bridge, 2-pole, BR/2-5.0/5.08-L7.0	50000000008

RATINGS					
Usegroup	B	C	D		
Rated Voltage	300 V	150 V	300 V	250 V	
Rated Current	15 A	15 A	10 A	17.5 A	
Rated Wire Size				min	max
solid	AWG 22-12	AWG 22-12	AWG 22-12	0.5 mm²	2.5 mm²
stranded	AWG 22-12	AWG 22-12	AWG 22-12	0.5 mm²	1.5 mm²
Torque (in.lbs)	4.43	4.43	4.43	4.43	
Screw Size	M3	M3	M3	M3	
Test Voltage	1.6 kV	1.3 kV	1.6 kV	2.0 kV	

[1]Colours according to RAL, there may be variations on colour due to production conditions. [2]The insulated bridges have to be mounted after the reflow soldering process.

L'IMPULSION
Retrouvez nous sur
www.limpulsion.fr

AK350/..-5.0-H-GREEN
AKZ350/..-5.08-H-GREEN

Spacing 5.0 mm / Spacing 5.08 mm



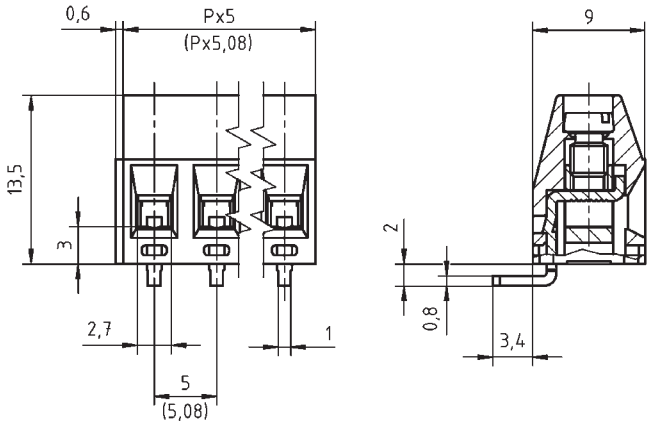

WIRE SIZES	
solid min	0.14 mm²
solid max	2.5 mm²
stranded min	0.14 mm²
stranded max	1.5 mm²
stranded with ferrule min	0.25 mm²
stranded with ferrule max	1.5 mm²
DIMENSIONS	
Stripped Length	6.0 mm
PCB Hole Diameter	1.3 mm
MATERIALS	
Clamp	Brass
Screw	Steel
Solder Tab	Brass
INSULATING MATERIAL	
Material	PA 6.6
Flammability Class	UL 94 V-0
TEMPERATURES	
Operating Temperature (without mech. load)	-40 °C - 105 °C
WAVE SOLDERING PROCESS	
Soldering Temperature, recommended	260 °C
Peak Soldering Time, recommended	3-4 s
REFLOW PROCESS	
Soldering Temperature, recommended	-
Peak Soldering Time, recommended	-

COLOURS[1]

GREEN, RAL 6018	LIGHT GREY, RAL 7035
BLUE, RAL 5015	

ACCESSORIES

	Description	Article Number
	Bridge, 2-pole, insulated, BRI/2-5.0/5.08-LIGHT GREY	50000000006
	Bridge, 3-pole, insulated, BRI/3-5.0/5.08-LIGHT GREY	50000000007
	Bridge, 2-pole, BR/2-5.0/5.08-L7.0	50000000008

RATINGS

	c UL us			VDE	
Usegroup	B	C	D		
Rated Voltage	300 V	150 V	300 V	250 V	
Rated Current	15 A	15 A	10 A	17.5 A	
Rated Wire Size				min	max
solid	AWG 22-12	AWG 22-12	AWG 22-12	0.5 mm²	2.5 mm²
stranded	AWG 22-12	AWG 22-12	AWG 22-12	0.5 mm²	1.5 mm²
Torque (in.lbs)	4.43	4.43	4.43	4.43	
Screw Size	M3	M3	M3	M3	
Test Voltage	1.6 kV	1.3 kV	1.6 kV	2.0 kV	

ORDER DATA (SPACING 5.0 MM)

Poles	Width (mm)	Article Designation	Article Number	PU
2	10.60	AK350/2-5.0-H-GREEN	50350020205F	200
3	15.60	AK350/3-5.0-H-GREEN	50350030205F	200
4	20.60	AK350/4-5.0-H-GREEN	50350040205F	200
5	25.60	AK350/5-5.0-H-GREEN	50350050205F	200
6	30.60	AK350/6-5.0-H-GREEN	50350060205E	100
7	35.60	AK350/7-5.0-H-GREEN	50350070205E	100
8	40.60	AK350/8-5.0-H-GREEN	50350080205E	100
9	45.60	AK350/9-5.0-H-GREEN	50350090205E	100
...	...	...	...	...
12	60.60	AK350/12-5.0-H-GREEN	50350120205D	50

ORDER DATA (SPACING 5.08 MM)

Poles	Width (mm)	Article Designation	Article Number	PU
2	10.76	AKZ350/2-5.08-H-GREEN	50350020201F	200
3	15.84	AKZ350/3-5.08-H-GREEN	50350030201F	200
4	20.92	AKZ350/4-5.08-H-GREEN	50350040201F	200
5	26.00	AKZ350/5-5.08-H-GREEN	50350050201F	200
6	31.08	AKZ350/6-5.08-H-GREEN	50350060201E	100
7	36.16	AKZ350/7-5.08-H-GREEN	50350070201E	100
8	41.24	AKZ350/8-5.08-H-GREEN	50350080201E	100
9	46.32	AKZ350/9-5.08-H-GREEN	50350090201E	100
...	...	...	...	...
12	61.56	AKZ350/12-5.08-H-GREEN	50350120201D	50

[1]Colours according to RAL, there may be variations on colour due to production conditions. Special colours on request.

Spacing 5.0 mm / Spacing 5.08 mm

AK350/..-5.0-H-GREEN-HC
AKZ350/..-5.08-H-GREEN-HC

WIRE SIZES	
solid min	0.14 mm²
solid max	2.5 mm²
stranded min	0.14 mm²
stranded max	1.5 mm²
stranded with ferrule min	0.25 mm²
stranded with ferrule max	1.5 mm²
DIMENSIONS	
Stripped Length	6.0 mm
PCB Hole Diameter	1.3 mm
MATERIALS	
Clamp	Brass
Screw	Steel
Solder Tab	Copper Alloy
INSULATING MATERIAL	
Material	PA 6.6
Flammability Class	UL 94 V-0
TEMPERATURES	
Operating Temperature (without mech. load)	-40 °C - 105 °C
WAVE SOLDERING PROCESS	
Soldering Temperature, recommended	260 °C
Peak Soldering Time, recommended	3-4 s
REFLOW PROCESS	
Soldering Temperature, recommended	-
Peak Soldering Time, recommended	-



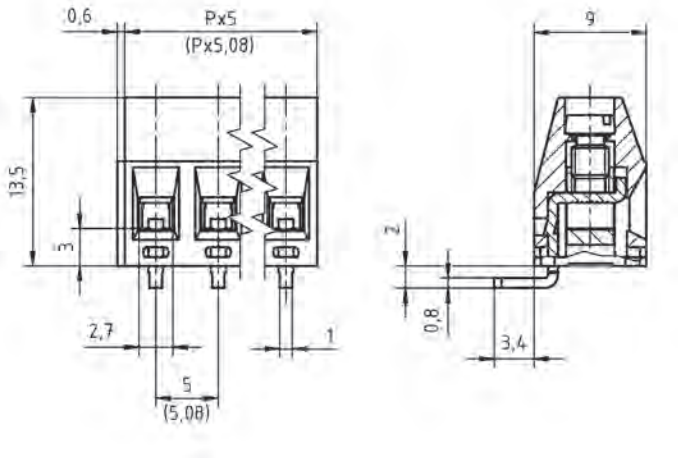

COLOURS[1]

GREEN, RAL 6018	LIGHT GREY, RAL 7035
BLUE, RAL 5015	

ORDER DATA (SPACING 5.0 MM)

Poles	Width (mm)	Article Designation	Article Number	PU
2	10.60	AK350/2-5.0-H-GREEN-HC	50350020295F	200
3	15.60	AK350/3-5.0-H-GREEN-HC	50350030295F	200
4	20.60	AK350/4-5.0-H-GREEN-HC	50350040295F	200
5	25.60	AK350/5-5.0-H-GREEN-HC	50350050295F	200
6	30.60	AK350/6-5.0-H-GREEN-HC	50350060295E	100
7	35.60	AK350/7-5.0-H-GREEN-HC	50350070295E	100
8	40.60	AK350/8-5.0-H-GREEN-HC	50350080295E	100
9	45.60	AK350/9-5.0-H-GREEN-HC	50350090295E	100
...	...	...	...	...
12	60.60	AK350/12-5.0-H-GREEN-HC	50350120295D	50

ORDER DATA (SPACING 5.08 MM)

Poles	Width (mm)	Article Designation	Article Number	PU
2	10.76	AKZ350/2-5.08-H-GREEN-HC	50350020291F	200
3	15.84	AKZ350/3-5.08-H-GREEN-HC	50350030291F	200
4	20.92	AKZ350/4-5.08-H-GREEN-HC	50350040291F	200
5	26.00	AKZ350/5-5.08-H-GREEN-HC	50350050291F	200
6	31.08	AKZ350/6-5.08-H-GREEN-HC	50350060291E	100
7	36.16	AKZ350/7-5.08-H-GREEN-HC	50350070291E	100
8	41.24	AKZ350/8-5.08-H-GREEN-HC	50350080291E	100
9	46.32	AKZ350/9-5.08-H-GREEN-HC	50350090291E	100
...	...	...	...	...
12	61.56	AKZ350/12-5.08-H-GREEN-HC	50350120291D	50

ACCESSORIES

	Description	Article Number
	Bridge, 2-pole, insulated, BRI/2-5.0/5.08-LIGHT GREY	50000000006
	Bridge, 3-pole, insulated, BRI/3-5.0/5.08-LIGHT GREY	50000000007
	Bridge, 2-pole, BR/2-5.0/5.08-L7.0	50000000008

RATINGS	cULus			VDE	
Usegroup	B	C	D		
Rated Voltage	300 V	150 V	300 V	250 V	
Rated Current	19 A	19 A	10 A	24 A	
Rated Wire Size				min	max
solid	AWG 22-12	AWG 22-12	AWG 22-12	0.5 mm²	2.5 mm²
stranded	AWG 22-12	AWG 22-12	AWG 22-12	0.5 mm²	1.5 mm²
Torque (in.lbs)	4.43	4.43	4.43	4.43	
Screw Size	M3	M3	M3	M3	
Test Voltage	1.6 kV	1.3 kV	1.6 kV	2.0 kV	

[1]Colours according to RAL, there may be variations on colour due to production conditions. Special colours on request.

L'IMPULSION
Retrouvez nous sur
www.limpulsion.fr

AK370/..-5.0-V-GREEN

Spacing 5.0 mm



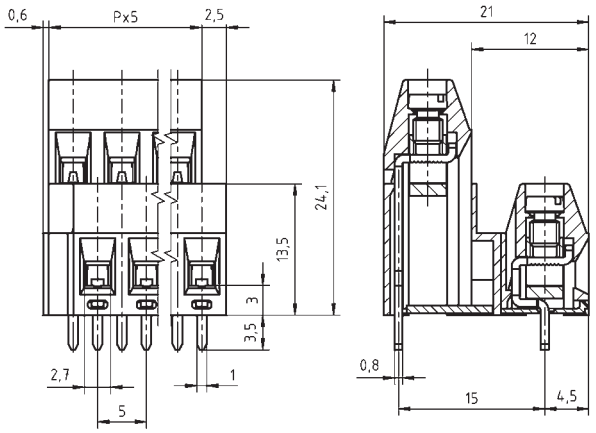

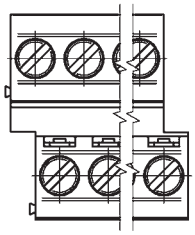

WIRE SIZES	
solid min	0.14 mm²
solid max	2.5 mm²
stranded min	0.14 mm²
stranded max	1.5 mm²
stranded with ferrule min	0.25 mm²
stranded with ferrule max	1.5 mm²
DIMENSIONS	
Stripped Length	6.0 mm
PCB Hole Diameter	1.3 mm
MATERIALS	
Clamp	Brass
Screw	Steel
Solder Tab	Brass
INSULATING MATERIAL	
Material	PA 6.6
Flammability Class	UL 94 V-0
TEMPERATURES	
Operating Temperature (without mech. load)	-40 °C - 105 °C
WAVE SOLDERING PROCESS	
Soldering Temperature, recommended	260 °C
Peak Soldering Time, recommended	3-4 s
REFLOW PROCESS	
Soldering Temperature, recommended	-
Peak Soldering Time, recommended	-

COLOURS[1]	
GREEN, RAL 6018	LIGHT GREEN, similar RAL 6018

ACCESSORIES

	Description	Article Number
	Bridge, 2-pole, insulated, BRI/2-5.0/5.08-LIGHT GREY	50000000006
	Bridge, 3-pole, insulated, BRI/3-5.0/5.08-LIGHT GREY	50000000007
	Bridge, 2-pole, BR/2-5.0/5.08-L7.0	50000000008

ORDER DATA (SPACING 5.0 MM)

Poles	Width (mm)	Article Designation	Article Number	PU
2	13.10	AK370/2-5.0-V-GREEN	50370020005E	100
3	18.10	AK370/3-5.0-V-GREEN	50370030005E	100
4	23.10	AK370/4-5.0-V-GREEN	50370040005E	100
5	28.10	AK370/5-5.0-V-GREEN	50370050005D	50
6	33.10	AK370/6-5.0-V-GREEN	50370060005D	50
7	38.10	AK370/7-5.0-V-GREEN	50370070005D	50
8	43.10	AK370/8-5.0-V-GREEN	50370080005D	50
9	48.10	AK370/9-5.0-V-GREEN	50370090005D	50
10	53.10	AK370/10-5.0-V-GREEN	50370100005D	50
11	58.10	AK370/11-5.0-V-GREEN	50370110005D	50
12	63.10	AK370/12-5.0-V-GREEN	50370120005D	50

RATINGS

	c UL us			VDE	
Usegroup	B	C	D		
Rated Voltage	300 V	150 V	300 V	250 V	
Rated Current	15 A	15 A	10 A	17.5 A	
Rated Wire Size				min	max
solid	AWG 22-12	AWG 22-12	AWG 22-12	0.5 mm²	2.5 mm²
stranded	AWG 22-12	AWG 22-12	AWG 22-12	0.5 mm²	1.5 mm²
Torque (in.lbs)	4.43	4.43	4.43	4.43	
Screw Size	M3	M3	M3	M3	
Test Voltage	1.6 kV	1.3 kV	1.6 kV	2.0 kV	

[1]Colours according to RAL, there may be variations on colour due to production conditions. Special colours on request.

Spacing 5.0 mm

AK370/..-5.0-V-GREEN-HC

WIRE SIZES	
solid min	0.14 mm²
solid max	2.5 mm²
stranded min	0.14 mm²
stranded max	1.5 mm²
stranded with ferrule min	0.25 mm²
stranded with ferrule max	1.5 mm²
DIMENSIONS	
Stripped Length	6.0 mm
PCB Hole Diameter	1.3 mm
MATERIALS	
Clamp	Brass
Screw	Steel
Solder Tab	Copper Alloy
INSULATING MATERIAL	
Material	PA 6.6
Flammability Class	UL 94 V-0
TEMPERATURES	
Operating Temperature (without mech. load)	-40 °C - 105 °C
WAVE SOLDERING PROCESS	
Soldering Temperature, recommended	260 °C
Peak Soldering Time, recommended	3-4 s
REFLOW PROCESS	
Soldering Temperature, recommended	-
Peak Soldering Time, recommended	-



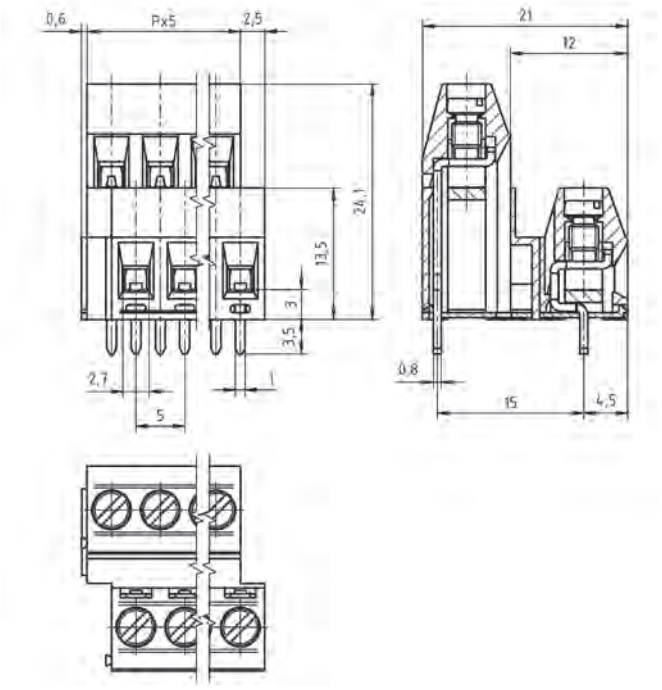

COLOURS[1]

GREEN, RAL 6018

LIGHT GREEN, similar RAL 6018

ORDER DATA (SPACING 5.0 MM)

Poles	Width (mm)	Article Designation	Article Number	PU
2	13.10	AK370/2-5.0-V-GREEN-HC	50370020009E	100
3	18.10	AK370/3-5.0-V-GREEN-HC	50370030009E	100
4	23.10	AK370/4-5.0-V-GREEN-HC	50370040009E	100
5	28.10	AK370/5-5.0-V-GREEN-HC	50370050009D	50
6	33.10	AK370/6-5.0-V-GREEN-HC	50370060009D	50
7	38.10	AK370/7-5.0-V-GREEN-HC	50370070009D	50
8	43.10	AK370/8-5.0-V-GREEN-HC	50370080009D	50
9	48.10	AK370/9-5.0-V-GREEN-HC	50370090009D	50
10	53.10	AK370/10-5.0-V-GREEN-HC	50370100009D	50
11	58.10	AK370/11-5.0-V-GREEN-HC	50370110009D	50
12	63.10	AK370/12-5.0-V-GREEN-HC	50370120009D	50

ACCESSORIES

	Description	Article Number
	Bridge, 2-pole, insulated, BRI/2-5.0/5.08-LIGHT GREY	50000000006
	Bridge, 3-pole, insulated, BRI/3-5.0/5.08-LIGHT GREY	50000000007
	Bridge, 2-pole, BR/2-5.0/5.08-L7.0	50000000008

RATINGS

	cULus			VDE	
Usegroup	B	C	D		
Rated Voltage	300 V	150 V	300 V	250 V	
Rated Current	19 A	19 A	10 A	24 A	
Rated Wire Size				min	max
solid	AWG 22-12	AWG 22-12	AWG 22-12	0.5 mm²	2.5 mm²
stranded	AWG 22-12	AWG 22-12	AWG 22-12	0.5 mm²	1.5 mm²
Torque (in.lbs)	4.43	4.43	4.43	4.43	
Screw Size	M3	M3	M3	M3	
Test Voltage	1.6 kV	1.3 kV	1.6 kV	2.0 kV	

[1]Colours according to RAL, there may be variations on colour due to production conditions. Special colours on request.

L'IMPULSION
Retrouvez nous sur
www.limpulsion.fr

AK700/..-5.0-V-GREEN
AKZ700/..-5.08-V-GREEN

Spacing 5.0 mm / Spacing 5.08 mm



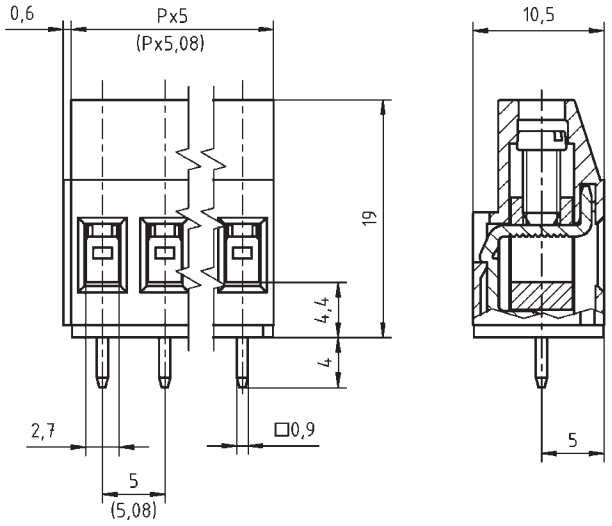

WIRE SIZES	
solid min	0.2 mm²
solid max	4.0 mm²
stranded min	0.2 mm²
stranded max	2.5 mm²
stranded with ferrule min	0.25 mm²
stranded with ferrule max	2.5 mm²
DIMENSIONS	
Stripped Length	8.0 mm
PCB Hole Diameter	1.3 mm
MATERIALS	
Clamp	Brass
Screw	Steel
Solder Tab	Copper Alloy
INSULATING MATERIAL	
Material	PA 6.6
Flammability Class	UL 94 V-0
TEMPERATURES	
Operating Temperature (without mech. load)	-40 °C - 105 °C
WAVE SOLDERING PROCESS	
Soldering Temperature, recommended	260 °C
Peak Soldering Time, recommended	3-4 s
REFLOW PROCESS	
Soldering Temperature, recommended	-
Peak Soldering Time, recommended	-

COLOURS[1]

GREEN, RAL 6018	GREY, RAL 7016
PEBBLE GREY, RAL 7032	BLUE, RAL 5015
LIGHT GREEN, similar RAL 6018	

ACCESSORIES

	Description	Article Number
	Bridge, 2-pole, insulated, BRI/2-5.0/5.08-LIGHT GREY	50000000006
	Bridge, 3-pole, insulated, BRI/3-5.0/5.08-LIGHT GREY	50000000007
	Bridge, 2-pole, BR/2-5.0/5.08-L7.0	50000000008
	Screw Cover SC-AK700-YELLOW	50700000004

RATINGS

	cULus			VDE	
Usegroup	B	C	D		
Rated Voltage	300 V	150 V	300 V	250 V	
Rated Current	20 A	20 A	10 A	24 A	
Rated Wire Size				min	max
solid	AWG 30-12	AWG 30-12	AWG 30-12	0.5 mm²	4.0 mm²
stranded	AWG 30-12	AWG 30-12	AWG 30-12	0.5 mm²	2.5 mm²
Torque (in.lbs)	3.98	3.98	3.98	4.43	
Screw Size	M3	M3	M3	M3	
Test Voltage	1.6 kV	1.3 kV	1.6 kV	2.0 kV	

ORDER DATA (SPACING 5.0 MM)

Poles	Width (mm)	Article Designation	Article Number	PU
2	10.60	AK700/2-5.0-V-GREEN	50700020201F	200
3	15.60	AK700/3-5.0-V-GREEN	50700030201F	200
4	20.60	AK700/4-5.0-V-GREEN	50700040201F	200
5	25.60	AK700/5-5.0-V-GREEN	50700050201F	200
6	30.60	AK700/6-5.0-V-GREEN	50700060201E	100
7	35.60	AK700/7-5.0-V-GREEN	50700070201E	100
8	40.60	AK700/8-5.0-V-GREEN	50700080201E	100
9	45.60	AK700/9-5.0-V-GREEN	50700090201E	100
...	...	...	...	...
12	60.60	AK700/12-5.0-V-GREEN	50700120201D	50

ORDER DATA (SPACING 5.08 MM)

Poles	Width (mm)	Article Designation	Article Number	PU
2	10.76	AKZ700/2-5.08-V-GREEN	50700020213F	200
3	15.84	AKZ700/3-5.08-V-GREEN	50700030213F	200
4	20.92	AKZ700/4-5.08-V-GREEN	50700040213F	200
5	26.00	AKZ700/5-5.08-V-GREEN	50700050213F	200
6	31.08	AKZ700/6-5.08-V-GREEN	50700060213E	100
7	36.16	AKZ700/7-5.08-V-GREEN	50700070213E	100
8	41.24	AKZ700/8-5.08-V-GREEN	50700080213E	100
9	46.32	AKZ700/9-5.08-V-GREEN	50700090213E	100
...	...	...	...	...
12	61.56	AKZ700/12-5.08-V-GREEN	50700120213D	50

[1]Colours according to RAL, there may be variations on colour due to production conditions. Special colours on request.

Spacing 5.0 mm

AK700/..-5.0-V-GREEN-BR

WIRE SIZES	
solid min	0.2 mm²
solid max	4.0 mm²
stranded min	0.2 mm²
stranded max	2.5 mm²
stranded with ferrule min	0.25 mm²
stranded with ferrule max	2.5 mm²
DIMENSIONS	
Stripped Length	8.0 mm
PCB Hole Diameter	1.3 mm
MATERIALS	
Clamp	Brass
Screw	Steel
Solder Tab	Copper Alloy
INSULATING MATERIAL	
Material	PA 6.6
Flammability Class	UL 94 V-0
TEMPERATURES	
Operating Temperature (without mech. load)	-40 °C - 105 °C
WAVE SOLDERING PROCESS	
Soldering Temperature, recommended	260 °C
Peak Soldering Time, recommended	3-4 s
REFLOW PROCESS	
Soldering Temperature, recommended	-
Peak Soldering Time, recommended	-



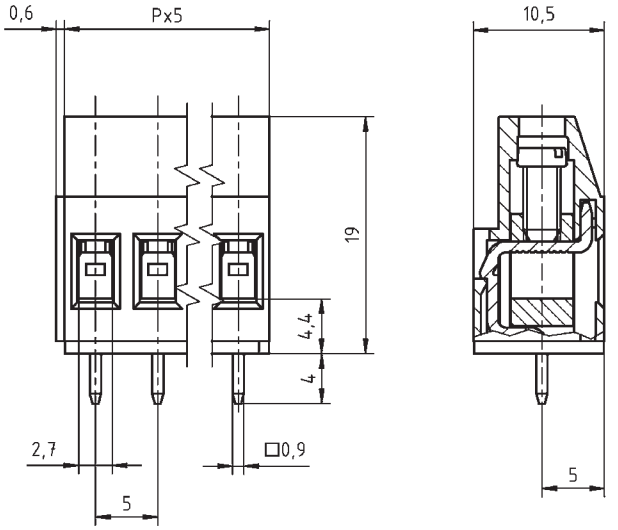

COLOURS[1]

GREEN, RAL 6018

ORDER DATA (SPACING 5.0 MM)

Poles	Width (mm)	Article Designation	Article Number	PU
3	15.60	AK700/3-5.0-V-GREEN-BR	50700030045F	200

ACCESSORIES

	Description	Article Number
	Screw Cover SC-AK700-YELLOW	50700000004

RATINGS

	cULus			VDE	
Usegroup	B	C	D		
Rated Voltage	300 V	-	300 V	250 V	
Rated Current	20 A	-	10 A	24 A	
Rated Wire Size				min	max
solid	AWG 30-12	-	AWG 30-12	0.5 mm²	4.0 mm²
stranded	AWG 30-12	-	AWG 30-12	0.5 mm²	2.5 mm²
Torque (in.lbs)	3.98	-	3.98	4.43	
Screw Size	M3	-	M3	M3	
Test Voltage	1.6 kV	-	1.6 kV	2.0 kV	

[1]Colours according to RAL, there may be variations on colour due to production conditions. Special colours on request.

L'IMPULSION
Retrouvez nous sur
www.limpulsion.fr

AK700/..-5.0-H-GREEN
AKZ700/..-5.08-H-GREEN

Spacing 5.0 mm / Spacing 5.08 mm



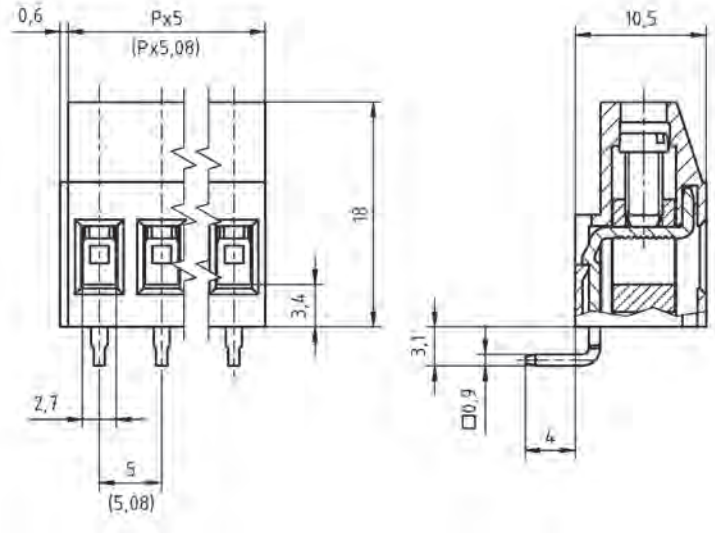

WIRE SIZES	
solid min	0.2 mm²
solid max	4.0 mm²
stranded min	0.2 mm²
stranded max	2.5 mm²
stranded with ferrule min	0.25 mm²
stranded with ferrule max	2.5 mm²
DIMENSIONS	
Stripped Length	8.0 mm
PCB Hole Diameter	1.3 mm
MATERIALS	
Clamp	Brass
Screw	Steel
Solder Tab	Copper Alloy
INSULATING MATERIAL	
Material	PA 6.6
Flammability Class	UL 94 V-0
TEMPERATURES	
Operating Temperature (without mech. load)	-40 °C - 105 °C
WAVE SOLDERING PROCESS	
Soldering Temperature, recommended	260 °C
Peak Soldering Time, recommended	3-4 s
REFLOW PROCESS	
Soldering Temperature, recommended	-
Peak Soldering Time, recommended	-

COLOURS[1]

GREEN, RAL 6018	GREY, RAL 7016
PEBBLE GREY, RAL 7032	BLUE, RAL 5015
LIGHT GREEN, similar RAL 6018	

ACCESSORIES

	Description	Article Number
	Bridge, 2-pole, insulated, BRI/2-5.0/5.08-LIGHT GREY	50000000006
	Bridge, 3-pole, insulated, BRI/3-5.0/5.08-LIGHT GREY	50000000007
	Bridge, 2-pole, BR/2-5.0/5.08-L7.0	50000000008
	Screw Cover SC-AK700-YELLOW	50700000004

RATINGS

	cULus			VDE	
Usegroup	B	C	D		
Rated Voltage	300 V	-	300 V	250 V	
Rated Current	15 A	-	10 A	24 A	
Rated Wire Size				min	max
solid	AWG 30-12	-	AWG 30-12	0.5 mm²	4.0 mm²
stranded	AWG 30-12	-	AWG 30-12	0.5 mm²	2.5 mm²
Torque (in.lbs)	3.98	-	3.98	4.43	
Screw Size	M3	-	M3	M3	
Test Voltage	1.6 kV	-	1.6 kV	2.0 kV	

ORDER DATA (SPACING 5.0 MM)

Poles	Width (mm)	Article Designation	Article Number	PU
2	10.60	AK700/2-5.0-H-GREEN	50700020261F	200
3	15.60	AK700/3-5.0-H-GREEN	50700030261F	200
4	20.60	AK700/4-5.0-H-GREEN	50700040261F	200
5	25.60	AK700/5-5.0-H-GREEN	50700050261F	200
6	30.60	AK700/6-5.0-H-GREEN	50700060261E	100
7	35.60	AK700/7-5.0-H-GREEN	50700070261E	100
8	40.60	AK700/8-5.0-H-GREEN	50700080261E	100
9	45.60	AK700/9-5.0-H-GREEN	50700090261E	100
...	...	...	...	...
12	60.60	AK700/12-5.0-H-GREEN	50700120261D	50

ORDER DATA (SPACING 5.08 MM)

Poles	Width (mm)	Article Designation	Article Number	PU
2	10.76	AKZ700/2-5.08-H-GREEN	50700020274F	200
3	15.84	AKZ700/3-5.08-H-GREEN	50700030274F	200
4	20.92	AKZ700/4-5.08-H-GREEN	50700040274F	200
5	26.00	AKZ700/5-5.08-H-GREEN	50700050274F	200
6	31.08	AKZ700/6-5.08-H-GREEN	50700060274E	100
7	36.16	AKZ700/7-5.08-H-GREEN	50700070274E	100
8	41.24	AKZ700/8-5.08-H-GREEN	50700080274E	100
9	46.32	AKZ700/9-5.08-H-GREEN	50700090274E	100
...	...	...	...	...
12	61.56	AKZ700/12-5.08-H-GREEN	50700120274D	50

[1]Colours according to RAL, there may be variations on colour due to production conditions. Special colours on request.

Spacing 5.0 mm / Spacing 5.08 mm

AK750/..-5.0-V-GREEN
AKZ750/..-5.08-V-GREEN



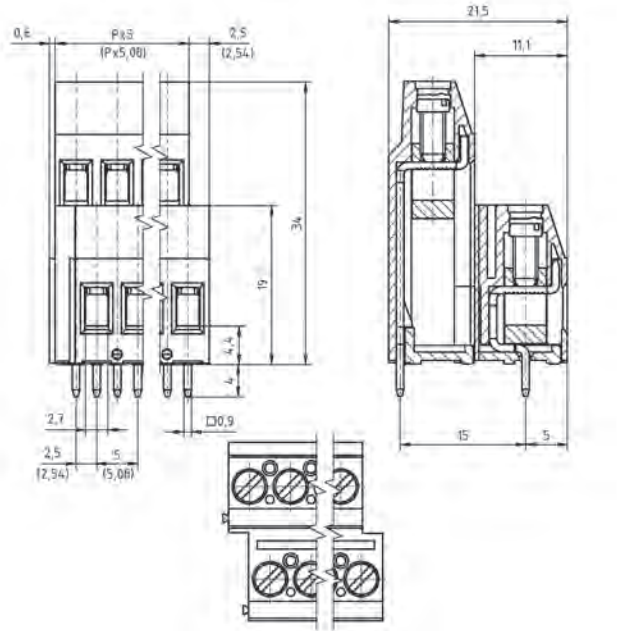

WIRE SIZES	
solid min	0.2 mm²
solid max	4.0 mm²
stranded min	0.2 mm²
stranded max	2.5 mm²
stranded with ferrule min	0.25 mm²
stranded with ferrule max	2.5 mm²
DIMENSIONS	
Stripped Length	8.0 mm
PCB Hole Diameter	1.3 mm
MATERIALS	
Clamp	Brass
Screw	Steel
Solder Tab	Copper Alloy
INSULATING MATERIAL	
Material	PA 6.6
Flammability Class	UL 94 V-0
TEMPERATURES	
Operating Temperature (without mech. load)	-40 °C - 105 °C
WAVE SOLDERING PROCESS	
Soldering Temperature, recommended	260 °C
Peak Soldering Time, recommended	3-4 s
REFLOW PROCESS	
Soldering Temperature, recommended	-
Peak Soldering Time, recommended	-

COLOURS[1]

GREEN, RAL 6018		GREY, RAL 7016	
LIGHT GREEN, similar RAL 6018			

ORDER DATA (SPACING 5.0 MM)

Poles	Width (mm)	Article Designation	Article Number	PU
2	13.10	AK750/2-5.0-V-GREEN	50750020201D	50
3	18.10	AK750/3-5.0-V-GREEN	50750030201D	50
4	23.10	AK750/4-5.0-V-GREEN	50750040201D	50
5	28.10	AK750/5-5.0-V-GREEN	50750050201D	50
6	33.10	AK750/6-5.0-V-GREEN	50750060201D	50
7	38.10	AK750/7-5.0-V-GREEN	50750070201D	50
8	43.10	AK750/8-5.0-V-GREEN	50750080201D	50
9	48.10	AK750/9-5.0-V-GREEN	50750090201D	50
...	...	...	...	...
12	63.10	AK750/12-5.0-V-GREEN	50750120201D	50

ORDER DATA (SPACING 5.08 MM)

Poles	Width (mm)	Article Designation	Article Number	PU
2	13.30	AKZ750/2-5.08-V-GREEN	50750020210D	50
3	18.38	AKZ750/3-5.08-V-GREEN	50750030210D	50
4	23.46	AKZ750/4-5.08-V-GREEN	50750040210D	50
5	28.54	AKZ750/5-5.08-V-GREEN	50750050210D	50
6	33.62	AKZ750/6-5.08-V-GREEN	50750060210D	50
7	38.70	AKZ750/7-5.08-V-GREEN	50750070210D	50
8	43.78	AKZ750/8-5.08-V-GREEN	50750080210D	50
9	48.86	AKZ750/9-5.08-V-GREEN	50750090210D	50
...	...	...	...	...
12	64.10	AKZ750/12-5.08-V-GREEN	50750120210D	50

ACCESSORIES

	Description	Article Number
	Bridge, 2-pole, insulated, BRI/2-5.0/5.08-LIGHT GREY	50000000006
	Bridge, 3-pole, insulated, BRI/3-5.0/5.08-LIGHT GREY	50000000007
	Bridge, 2-pole, BR/2-5.0/5.08-L7.0	50000000008
	Screw Cover SC-AK700-YELLOW	50700000004

RATINGS

	cULus			VDE	
Usegroup	B	C	D		
Rated Voltage	300 V	150 V	300 V	250 V	
Rated Current	20 A	20 A	10 A	24 A	
Rated Wire Size				min	max
solid	AWG 30-12	AWG 30-12	AWG 30-12	0.5 mm²	4.0 mm²
stranded	AWG 30-12	AWG 30-12	AWG 30-12	0.5 mm²	2.5 mm²
Torque (in.lbs)	3.98	3.98	3.98	4.43	
Screw Size	M3	M3	M3	M3	
Test Voltage	1.6 kV	1.3 kV	1.6 kV	2.0 kV	

[1]Colours according to RAL, there may be variations on colour due to production conditions. Special colours on request.

L'IMPULSION
Retrouvez nous sur
www.limpulsion.fr

AKZ770/..-5.08-V-GREEN

Spacing 5.08 mm



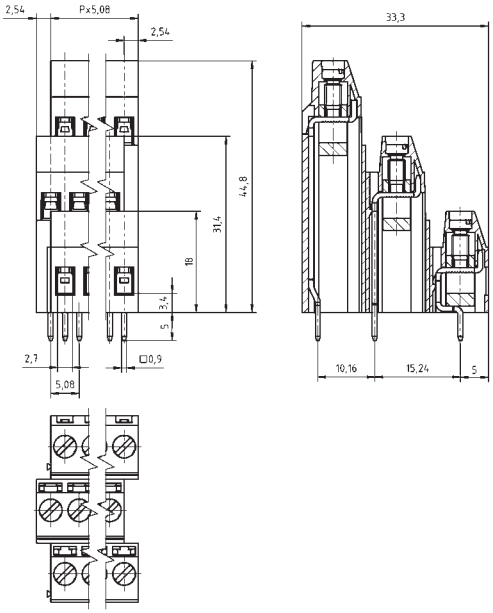

WIRE SIZES	
solid min	0.2 mm²
solid max	4.0 mm²
stranded min	0.2 mm²
stranded max	2.5 mm²
stranded with ferrule min	0.25 mm²
stranded with ferrule max	2.5 mm²
DIMENSIONS	
Stripped Length	8.0 mm
PCB Hole Diameter	1.3 mm
MATERIALS	
Clamp	Brass
Screw	Steel
Solder Tab	Copper Alloy
INSULATING MATERIAL	
Material	PA 6.6
Flammability Class	UL 94 V-0
TEMPERATURES	
Operating Temperature (without mech. load)	-40 °C - 105 °C
WAVE SOLDERING PROCESS	
Soldering Temperature, recommended	260 °C
Peak Soldering Time, recommended	3-4 s
REFLOW PROCESS	
Soldering Temperature, recommended	-
Peak Soldering Time, recommended	-

COLOURS[1]

GREEN, RAL 6018

LIGHT GREEN, similar RAL 6018

ACCESSORIES

	Description	Article Number
	Bridge, 2-pole, insulated, BRI/2-5.0/5.08-LIGHT GREY	50000000006
	Bridge, 3-pole, insulated, BRI/3-5.0/5.08-LIGHT GREY	50000000007
	Bridge, 2-pole, BR/2-5.0/5.08-L7.0	50000000008
	Screw Cover SC-AK700-YELLOW	50700000004

ORDER DATA (SPACING 5.08 MM)

Poles	Width (mm)	Article Designation	Article Number	PU
2	12.70	AKZ770/2-5.08-V-GREEN	50770020210D	50
3	17.78	AKZ770/3-5.08-V-GREEN	50770030210D	50
4	22.86	AKZ770/4-5.08-V-GREEN	50770040210D	50
5	27.94	AKZ770/5-5.08-V-GREEN	50770050210D	50
6	33.02	AKZ770/6-5.08-V-GREEN	50770060210D	50
7	38.10	AKZ770/7-5.08-V-GREEN	50770070210D	50
8	43.18	AKZ770/8-5.08-V-GREEN	50770080210D	50
9	48.26	AKZ770/9-5.08-V-GREEN	50770090210D	50
10	53.34	AKZ770/10-5.08-V-GREEN	50770100210D	50
11	58.42	AKZ770/11-5.08-V-GREEN	50770110210D	50
12	63.50	AKZ770/12-5.08-V-GREEN	50770120210D	50

RATINGS

	c UL us			VDE	
Usegroup	B	C	D		
Rated Voltage	300 V	150 V	300 V	250 V	
Rated Current	20 A	20 A	10 A	22 A	
Rated Wire Size				min	max
solid	AWG 30-12	AWG 30-12	AWG 30-12	0.5 mm²	2.5 mm²
stranded	AWG 30-12	AWG 30-12	AWG 30-12	0.5 mm²	2.5 mm²
Torque (in.lbs)	3.98	3.98	3.98	4.43	
Screw Size	M3	M3	M3	M3	
Test Voltage	1.6 kV	1.3 kV	1.6 kV	2.0 kV	

[1]Colours according to RAL, there may be variations on colour due to production conditions. Special colours on request.

Spacing 5.0 mm

AK790/..-5.0-V-GREEN

WIRE SIZES	
solid min	0.2 mm²
solid max	4.0 mm²
stranded min	0.2 mm²
stranded max	2.5 mm²
stranded with ferrule min	0.25 mm²
stranded with ferrule max	2.5 mm²
DIMENSIONS	
Stripped Length	8.0 mm
PCB Hole Diameter	1.3 mm
MATERIALS	
Clamp	Brass
Screw	Steel
Solder Tab	Copper Alloy
INSULATING MATERIAL	
Material	PA 6.6
Flammability Class	UL 94 V-0
TEMPERATURES	
Operating Temperature (without mech. load)	-40 °C - 105 °C
WAVE SOLDERING PROCESS	
Soldering Temperature, recommended	260 °C
Peak Soldering Time, recommended	3-4 s
REFLOW PROCESS	
Soldering Temperature, recommended	-
Peak Soldering Time, recommended	-



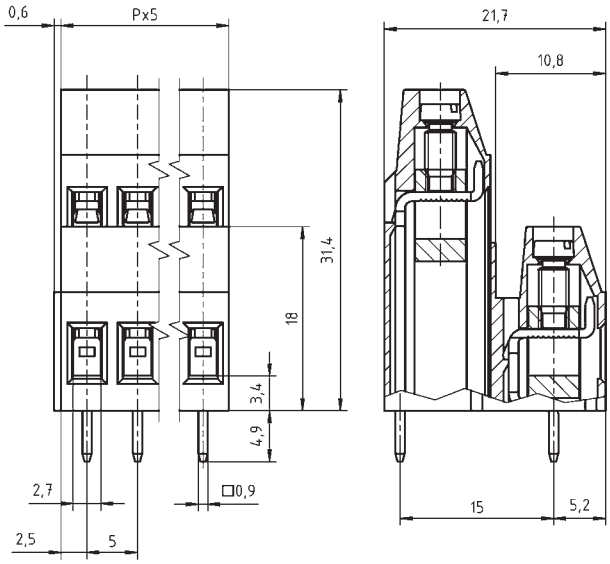

COLOURS[1]

GREEN, RAL 6018

LIGHT GREEN, similar RAL 6018

ORDER DATA (SPACING 5.0 MM)

Poles	Width (mm)	Article Designation	Article Number	PU
2	10.60	AK790/2-5.0-V-GREEN	50790020201D	50
3	15.60	AK790/3-5.0-V-GREEN	50790030201D	50
4	20.60	AK790/4-5.0-V-GREEN	50790040201D	50
5	25.60	AK790/5-5.0-V-GREEN	50790050201D	50
6	30.60	AK790/6-5.0-V-GREEN	50790060201D	50
7	35.60	AK790/7-5.0-V-GREEN	50790070201D	50
8	40.60	AK790/8-5.0-V-GREEN	50790080201D	50
9	45.60	AK790/9-5.0-V-GREEN	50790090201D	50
10	50.60	AK790/10-5.0-V-GREEN	50790100201D	50
11	55.60	AK790/11-5.0-V-GREEN	50790110201D	50
12	60.60	AK790/12-5.0-V-GREEN	50790120201D	50

ACCESSORIES

	Description	Article Number
	Bridge, 2-pole, insulated, BRI/2-5.0/5.08-LIGHT GREY	50000000006
	Bridge, 3-pole, insulated, BRI/3-5.0/5.08-LIGHT GREY	50000000007
	Bridge, 2-pole, BR/2-5.0/5.08-L7.0	50000000008
	Screw Cover SC-AK700-YELLOW	50700000004

RATINGS

	cULus			VDE	
Usegroup	B	C	D		
Rated Voltage	300 V	150 V	300 V	250 V	
Rated Current	20 A	20 A	10 A	24 A	
Rated Wire Size				min	max
solid	AWG 30-12	AWG 30-12	AWG 30-12	0.5 mm²	4.0 mm²
stranded	AWG 30-12	AWG 30-12	AWG 30-12	0.5 mm²	2.5 mm²
Torque (in.lbs)	3.98	3.98	3.98	4.43	
Screw Size	M3	M3	M3	M3	
Test Voltage	1.6 kV	1.3 kV	1.6 kV	2.0 kV	

[1]Colours according to RAL, there may be variations on colour due to production conditions. Special colours on request.

L'IMPULSION
Retrouvez nous sur
www.limpulsion.fr

AK793/..-5.0-V-GREEN

Spacing 5.0 mm



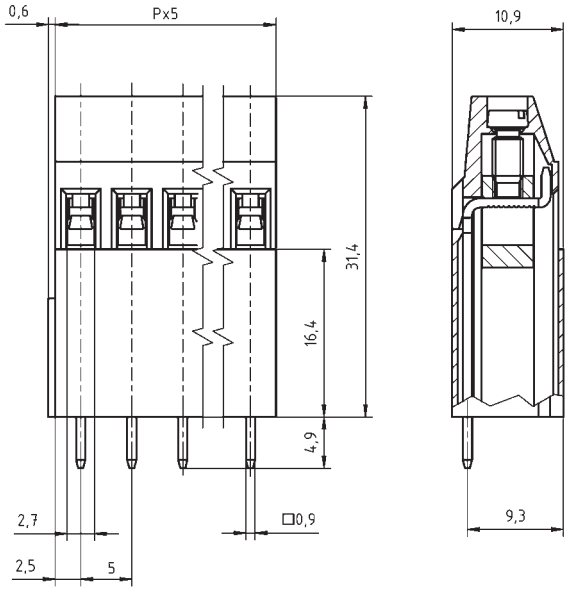

WIRE SIZES	
solid min	0.2 mm²
solid max	4.0 mm²
stranded min	0.2 mm²
stranded max	2.5 mm²
stranded with ferrule min	0.25 mm²
stranded with ferrule max	2.5 mm²
DIMENSIONS	
Stripped Length	8.0 mm
PCB Hole Diameter	1.3 mm
MATERIALS	
Clamp	Brass
Screw	Steel
Solder Tab	Copper Alloy
INSULATING MATERIAL	
Material	PA 6.6
Flammability Class	UL 94 V-0
TEMPERATURES	
Operating Temperature (without mech. load)	-40 °C - 105 °C
WAVE SOLDERING PROCESS	
Soldering Temperature, recommended	260 °C
Peak Soldering Time, recommended	3-4 s
REFLOW PROCESS	
Soldering Temperature, recommended	-
Peak Soldering Time, recommended	-

COLOURS[1]

GREEN, RAL 6018

LIGHT GREEN, similar RAL 6018

ACCESSORIES

	Description	Article Number
	Bridge, 2-pole, insulated, BRI/2-5.0/5.08-LIGHT GREY	50000000006
	Bridge, 3-pole, insulated, BRI/3-5.0/5.08-LIGHT GREY	50000000007
	Bridge, 2-pole, BR/2-5.0/5.08-L7.0	50000000008
	Screw Cover SC-AK700-YELLOW	50700000004

RATINGS

	cULus			VDE	
Usegroup	B	C	D		
Rated Voltage	300 V	150 V	300 V	250 V	
Rated Current	20 A	20 A	10 A	24 A	
Rated Wire Size				min	max
solid	AWG 30-12	AWG 30-12	AWG 30-12	0.5 mm²	4.0 mm²
stranded	AWG 30-12	AWG 30-12	AWG 30-12	0.5 mm²	2.5 mm²
Torque (in.lbs)	3.98	3.98	3.98	4.43	
Screw Size	M3	M3	M3	M3	
Test Voltage	1.6 kV	1.3 kV	1.6 kV	2.0 kV	

ORDER DATA (SPACING 5.0 MM)

Poles	Width (mm)	Article Designation	Article Number	PU
2	10.60	AK793/2-5.0-V-GREEN	50793020201D	50
4	20.60	AK793/4-5.0-V-GREEN	50793040201D	50
6	30.60	AK793/6-5.0-V-GREEN	50793060201D	50
8	40.60	AK793/8-5.0-V-GREEN	50793080201D	50
10	50.60	AK793/10-5.0-V-GREEN	50793100201D	50
12	60.60	AK793/12-5.0-V-GREEN	50793120201D	50

[1]Colours according to RAL, there may be variations on colour due to production conditions. Special colours on request.

Spacing 6.35 mm

AKZ840/..-6.35-V-GREEN

WIRE SIZES	
solid min	0.2 mm²
solid max	6.0 mm²
stranded min	0.2 mm²
stranded max	4.0 mm²
stranded with ferrule min	0.25 mm²
stranded with ferrule max	4.0 mm²
DIMENSIONS	
Stripped Length	7.0 mm
PCB Hole Diameter	1.6 mm
MATERIALS	
Clamp	Brass
Screw	Steel
Solder Tab	Brass
INSULATING MATERIAL	
Material	PA 6.6
Flammability Class	UL 94 V-0
TEMPERATURES	
Operating Temperature (without mech. load)	-40 °C - 105 °C
WAVE SOLDERING PROCESS	
Soldering Temperature, recommended	260 °C
Peak Soldering Time, recommended	3-4 s
REFLOW PROCESS	
Soldering Temperature, recommended	-
Peak Soldering Time, recommended	-



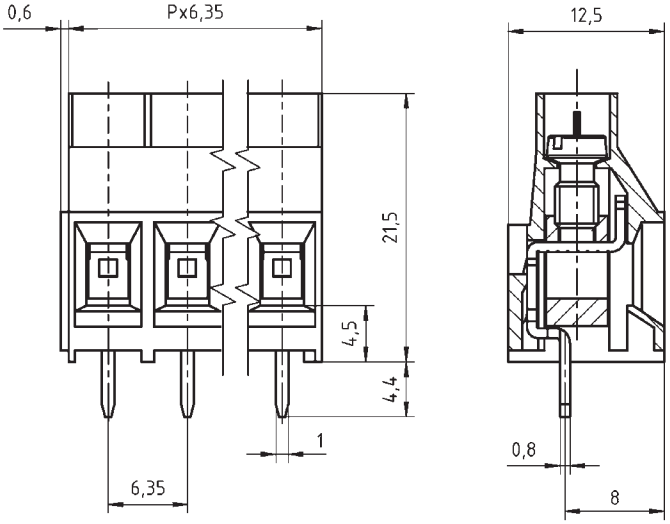

COLOURS[1]	
GREEN, RAL 6018	LIGHT GREY, RAL 7035
LIGHT GREEN, similar RAL 6018	

ORDER DATA (SPACING 6.35 MM)

Poles	Width (mm)	Article Designation	Article Number	PU
2	13.30	AKZ840/2-6.35-V-GREEN	50840020201D	50
3	19.65	AKZ840/3-6.35-V-GREEN	50840030201D	50
4	26.00	AKZ840/4-6.35-V-GREEN	50840040201D	50
5	32.35	AKZ840/5-6.35-V-GREEN	50840050201D	50
6	38.70	AKZ840/6-6.35-V-GREEN	50840060201D	50
7	45.05	AKZ840/7-6.35-V-GREEN	50840070201D	50
8	51.40	AKZ840/8-6.35-V-GREEN	50840080201D	50
9	57.75	AKZ840/9-6.35-V-GREEN	50840090201D	50
10	64.10	AKZ840/10-6.35-V-GREEN	50840100201D	50
11	70.45	AKZ840/11-6.35-V-GREEN	50840110201D	50
12	76.80	AKZ840/12-6.35-V-GREEN	50840120201D	50
13	83.15	AKZ840/13-6.35-V-GREEN	50840130201D	50
14	89.50	AKZ840/14-6.35-V-GREEN	50840140201D	50
15	95.85	AKZ840/15-6.35-V-GREEN	50840150201D	50
16	102.20	AKZ840/16-6.35-V-GREEN	50840160201D	50

RATINGS	c UL us			VDE	
Usegroup	B	C	D		
Rated Voltage	300 V	-	300 V	450 V	
Rated Current	30 A	-	10 A	32 A	
Rated Wire Size				min	max
solid	AWG 28-10	-	AWG 28-10	0.2 mm²	4.0 mm²
stranded	AWG 28-10	-	AWG 28-10	0.2 mm²	4.0 mm²
Torque (in.lbs)	7.08	-	7.08	7.08	
Screw Size	M3.5	-	M3.5	M3.5	
Test Voltage	1.6 kV	-	1.6 kV	2.5 kV	

[1]Colours according to RAL, there may be variations on colour due to production conditions. Special colours on request.

L'IMPULSION
Retrouvez nous sur
www.limpulsion.fr

AK360/..-7.5-V-GREEN

Spacing 7.5 mm

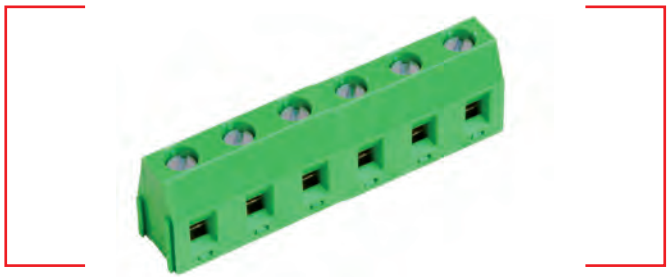

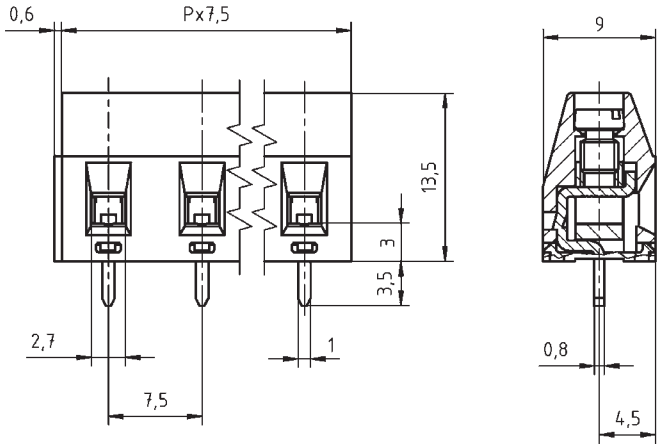

WIRE SIZES	
solid min	0.14 mm²
solid max	2.5 mm²
stranded min	0.14 mm²
stranded max	1.5 mm²
stranded with ferrule min	0.25 mm²
stranded with ferrule max	1.5 mm²
DIMENSIONS	
Stripped Length	6.0 mm
PCB Hole Diameter	1.3 mm
MATERIALS	
Clamp	Brass
Screw	Steel
Solder Tab	Brass
INSULATING MATERIAL	
Material	PA 6.6
Flammability Class	UL 94 V-0
TEMPERATURES	
Operating Temperature (without mech. load)	-40 °C - 105 °C
WAVE SOLDERING PROCESS	
Soldering Temperature, recommended	260 °C
Peak Soldering Time, recommended	3-4 s
REFLOW PROCESS	
Soldering Temperature, recommended	-
Peak Soldering Time, recommended	-

COLOURS[1]			
	GREEN, RAL 6018		BLACK, RAL 9011
	LIGHT GREEN, similar RAL 6018		

ACCESSORIES

	Description	Article Number
	Bridge, 2-pole, insulated, BRI/2-7.5/7.62-L8.2-LIGHT GREY	50000000017

ORDER DATA (SPACING 7.5 MM)

Poles	Width (mm)	Article Designation	Article Number	PU
2	15.60	AK360/2-7.5-V-GREEN	50360020005F	200
3	23.10	AK360/3-7.5-V-GREEN	50360030005F	200
4	30.60	AK360/4-7.5-V-GREEN	50360040005F	200
5	38.10	AK360/5-7.5-V-GREEN	50360050005E	100
6	45.60	AK360/6-7.5-V-GREEN	50360060005E	100
7	53.10	AK360/7-7.5-V-GREEN	50360070005E	100
8	60.60	AK360/8-7.5-V-GREEN	50360080005E	100
9	68.10	AK360/9-7.5-V-GREEN	50360090005E	100
10	75.60	AK360/10-7.5-V-GREEN	50360100005D	50
11	83.10	AK360/11-7.5-V-GREEN	50360110005D	50
12	90.60	AK360/12-7.5-V-GREEN	50360120005D	50

RATINGS

	c UL us			VDE	
Usegroup	B	C	D		
Rated Voltage	300 V	150 V	300 V	750 V	
Rated Current	15 A	15 A	10 A	17.5 A	
Rated Wire Size				min	max
solid	AWG 22-12	AWG 22-12	AWG 22-12	0.5 mm²	2.5 mm²
stranded	AWG 22-12	AWG 22-12	AWG 22-12	0.5 mm²	1.5 mm²
Torque (in.lbs)	4.43	4.43	4.43	4.43	
Screw Size	M3	M3	M3	M3	
Test Voltage	1.6 kV	1.3 kV	1.6 kV	3.0 kV	

[1]Colours according to RAL, there may be variations on colour due to production conditions. Special colours on request.

Spacing 7.5 mm

AK360/..-7.5-V-GREEN-HC

WIRE SIZES	
solid min	0.14 mm²
solid max	2.5 mm²
stranded min	0.14 mm²
stranded max	1.5 mm²
stranded with ferrule min	0.25 mm²
stranded with ferrule max	1.5 mm²
DIMENSIONS	
Stripped Length	6.0 mm
PCB Hole Diameter	1.3 mm
MATERIALS	
Clamp	Brass
Screw	Steel
Solder Tab	Copper Alloy
INSULATING MATERIAL	
Material	PA 6.6
Flammability Class	UL 94 V-0
TEMPERATURES	
Operating Temperature (without mech. load)	-40 °C - 105 °C
WAVE SOLDERING PROCESS	
Soldering Temperature, recommended	260 °C
Peak Soldering Time, recommended	3-4 s
REFLOW PROCESS	
Soldering Temperature, recommended	-
Peak Soldering Time, recommended	-

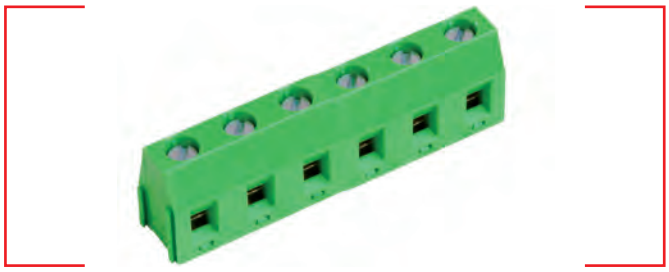

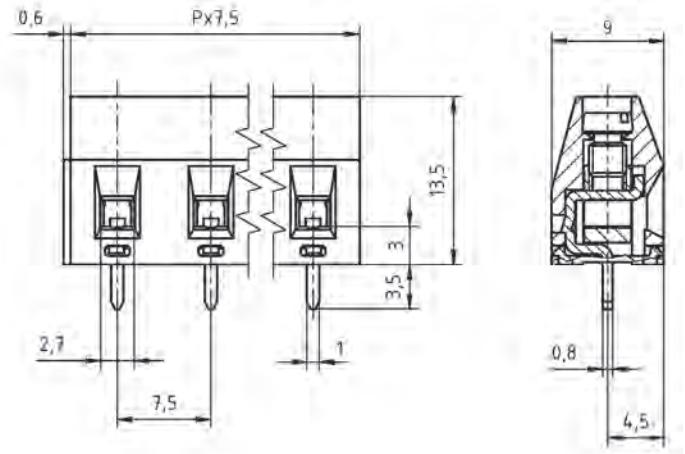

COLOURS[1]

	GREEN, RAL 6018		BLACK, RAL 9011
	LIGHT GREEN, similar RAL 6018		

ORDER DATA (SPACING 7.5 MM)

Poles	Width (mm)	Article Designation	Article Number	PU
2	15.60	AK360/2-7.5-V-GREEN-HC	50360020009F	200
3	23.10	AK360/3-7.5-V-GREEN-HC	50360030009F	200
4	30.60	AK360/4-7.5-V-GREEN-HC	50360040009F	200
5	38.10	AK360/5-7.5-V-GREEN-HC	50360050009E	100
6	45.60	AK360/6-7.5-V-GREEN-HC	50360060009E	100
7	53.10	AK360/7-7.5-V-GREEN-HC	50360070009E	100
8	60.60	AK360/8-7.5-V-GREEN-HC	50360080009E	100
9	68.10	AK360/9-7.5-V-GREEN-HC	50360090009E	100
10	75.60	AK360/10-7.5-V-GREEN-HC	50360100009D	50
11	83.10	AK360/11-7.5-V-GREEN-HC	50360110009D	50
12	90.60	AK360/12-7.5-V-GREEN-HC	50360120009D	50

ACCESSORIES

	Description	Article Number
	Bridge, 2-pole, insulated, BRI/2-7.5/7.62-L8.2-LIGHT GREY	50000000017

RATINGS

	cULus			VDE	
Usegroup	B	C	D		
Rated Voltage	300 V	150 V	300 V	750 V	
Rated Current	19 A	19 A	10 A	24 A	
Rated Wire Size				min	max
solid	AWG 22-12	AWG 22-12	AWG 22-12	0.5 mm²	2.5 mm²
stranded	AWG 22-12	AWG 22-12	AWG 22-12	0.5 mm²	1.5 mm²
Torque (in.lbs)	4.43	4.43	4.43	4.43	
Screw Size	M3	M3	M3	M3	
Test Voltage	1.6 kV	1.3 kV	1.6 kV	3.0 kV	

[1]Colours according to RAL, there may be variations on colour due to production conditions. Special colours on request.

L'IMPULSION
Retrouvez nous sur
www.limpulsion.fr

AK360/..-7.5-H-GREEN

Spacing 7.5 mm

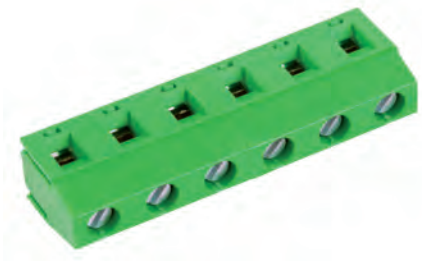

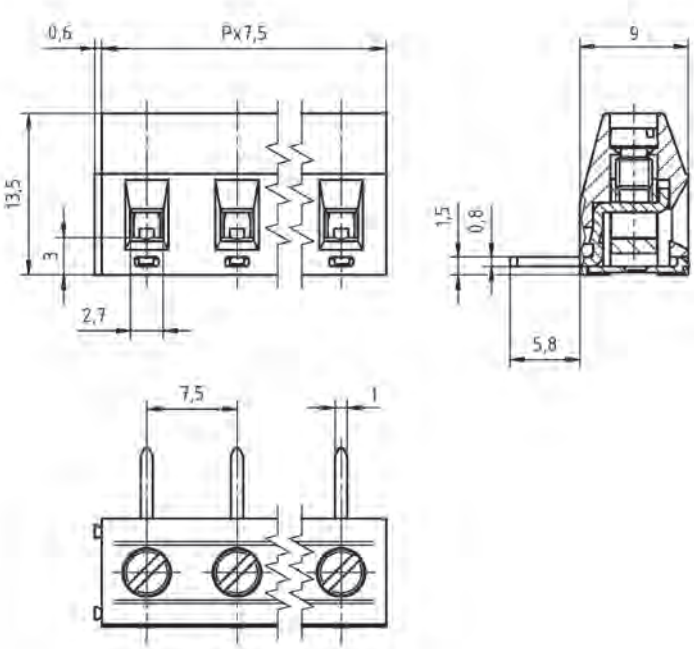

WIRE SIZES	
solid min	0.14 mm²
solid max	2.5 mm²
stranded min	0.14 mm²
stranded max	1.5 mm²
stranded with ferrule min	0.25 mm²
stranded with ferrule max	1.5 mm²
DIMENSIONS	
Stripped Length	6.0 mm
PCB Hole Diameter	1.3 mm
MATERIALS	
Clamp	Brass
Screw	Steel
Solder Tab	Brass
INSULATING MATERIAL	
Material	PA 6.6
Flammability Class	UL 94 V-0
TEMPERATURES	
Operating Temperature (without mech. load)	-40 °C - 105 °C
WAVE SOLDERING PROCESS	
Soldering Temperature, recommended	260 °C
Peak Soldering Time, recommended	3-4 s
REFLOW PROCESS	
Soldering Temperature, recommended	-
Peak Soldering Time, recommended	-

COLOURS[1]

GREEN, RAL 6018 | BLACK, RAL 9011

ACCESSORIES

	Description	Article Number
	Bridge, 2-pole, insulated, BRI/2-7.5/7.62-L8.2-LIGHT GREY	50000000017

ORDER DATA (SPACING 7.5 MM)

Poles	Width (mm)	Article Designation	Article Number	PU
2	15.60	AK360/2-7.5-H-GREEN	50360020207F	200
3	23.10	AK360/3-7.5-H-GREEN	50360030207F	200
4	30.60	AK360/4-7.5-H-GREEN	50360040207F	200
5	38.10	AK360/5-7.5-H-GREEN	50360050207E	100
6	45.60	AK360/6-7.5-H-GREEN	50360060207E	100
7	53.10	AK360/7-7.5-H-GREEN	50360070207E	100
8	60.60	AK360/8-7.5-H-GREEN	50360080207E	100
9	68.10	AK360/9-7.5-H-GREEN	50360090207E	100
10	75.60	AK360/10-7.5-H-GREEN	50360100207D	50
11	83.10	AK360/11-7.5-H-GREEN	50360110207D	50
12	90.60	AK360/12-7.5-H-GREEN	50360120207D	50

RATINGS

	c UL us			VDE	
Usegroup	B	C	D		
Rated Voltage	300 V	150 V	300 V	750 V	
Rated Current	15 A	15 A	10 A	17.5 A	
Rated Wire Size				min	max
solid	AWG 22-12	AWG 22-12	AWG 22-12	0.5 mm²	2.5 mm²
stranded	AWG 22-12	AWG 22-12	AWG 22-12	0.5 mm²	1.5 mm²
Torque (in.lbs)	4.43	4.43	4.43	4.43	
Screw Size	M3	M3	M3	M3	
Test Voltage	1.6 kV	1.3 kV	1.6 kV	3.0 kV	

[1]Colours according to RAL, there may be variations on colour due to production conditions. Special colours on request.

Spacing 7.5 mm

AK360/..-7.5-H-GREEN-HC

WIRE SIZES	
solid min	0.14 mm²
solid max	2.5 mm²
stranded min	0.14 mm²
stranded max	1.5 mm²
stranded with ferrule min	0.25 mm²
stranded with ferrule max	1.5 mm²
DIMENSIONS	
Stripped Length	6.0 mm
PCB Hole Diameter	1.3 mm
MATERIALS	
Clamp	Brass
Screw	Steel
Solder Tab	Copper Alloy
INSULATING MATERIAL	
Material	PA 6.6
Flammability Class	UL 94 V-0
TEMPERATURES	
Operating Temperature (without mech. load)	-40 °C - 105 °C
WAVE SOLDERING PROCESS	
Soldering Temperature, recommended	260 °C
Peak Soldering Time, recommended	3-4 s
REFLOW PROCESS	
Soldering Temperature, recommended	-
Peak Soldering Time, recommended	-



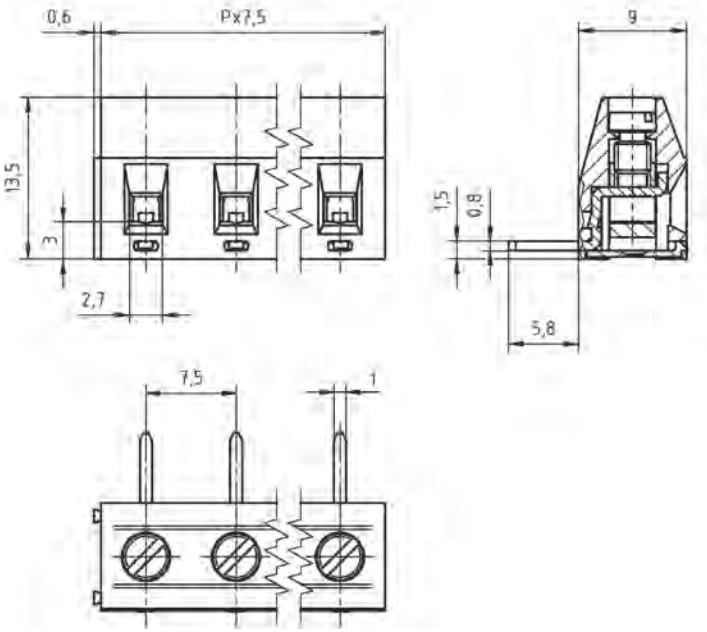

COLOURS[1]

GREEN, RAL 6018 — BLACK, RAL 9011

ORDER DATA (SPACING 7.5 MM)

Poles	Width (mm)	Article Designation	Article Number	PU
2	15.60	AK360/2-7.5-H-GREEN-HC	50360020209F	200
3	23.10	AK360/3-7.5-H-GREEN-HC	50360030209F	200
4	30.60	AK360/4-7.5-H-GREEN-HC	50360040209F	200
5	38.10	AK360/5-7.5-H-GREEN-HC	50360050209E	100
6	45.60	AK360/6-7.5-H-GREEN-HC	50360060209E	100
7	53.10	AK360/7-7.5-H-GREEN-HC	50360070209E	100
8	60.60	AK360/8-7.5-H-GREEN-HC	50360080209E	100
9	68.10	AK360/9-7.5-H-GREEN-HC	50360090209E	100
10	75.60	AK360/10-7.5-H-GREEN-HC	50360100209D	50
11	83.10	AK360/11-7.5-H-GREEN-HC	50360110209D	50
12	90.60	AK360/12-7.5-H-GREEN-HC	50360120209D	50

ACCESSORIES

	Description	Article Number
	Bridge, 2-pole, insulated, BRI/2-7.5/7.62-L8.2-LIGHT GREY	50000000017

RATINGS

	c UL us			VDE	
Usegroup	B	C	D		
Rated Voltage	300 V	150 V	300 V	750 V	
Rated Current	19 A	19 A	10 A	24 A	
Rated Wire Size				min	max
solid	AWG 22-12	AWG 22-12	AWG 22-12	0.5 mm²	2.5 mm²
stranded	AWG 22-12	AWG 22-12	AWG 22-12	0.5 mm²	1.5 mm²
Torque (in.lbs)	4.43	4.43	4.43	4.43	
Screw Size	M3	M3	M3	M3	
Test Voltage	1.6 kV	1.3 kV	1.6 kV	3.0 kV	

[1]Colours according to RAL, there may be variations on colour due to production conditions. Special colours on request.

L'IMPULSION
Retrouvez nous sur
www.limpulsion.fr

AK710/..-7.5-V-GREEN
AKZ710/..-7.62-V-GREEN

Spacing 7.5 mm / Spacing 7.62 mm



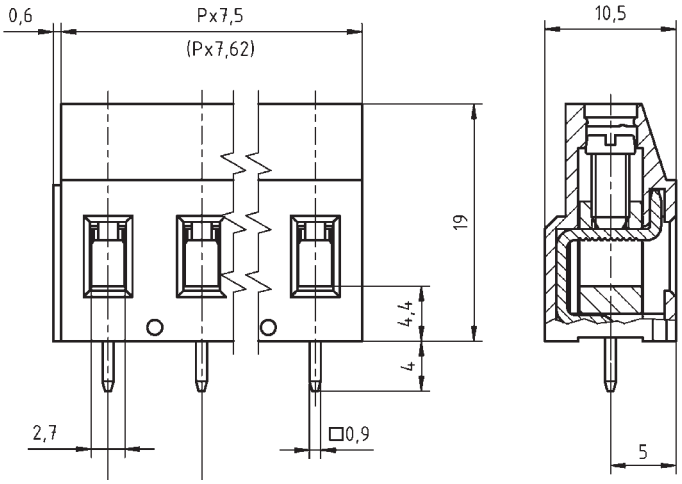

WIRE SIZES	
solid min	0.2 mm²
solid max	4.0 mm²
stranded min	0.2 mm²
stranded max	2.5 mm²
stranded with ferrule min	0.25 mm²
stranded with ferrule max	2.5 mm²
DIMENSIONS	
Stripped Length	8.0 mm
PCB Hole Diameter	1.3 mm
MATERIALS	
Clamp	Brass
Screw	Steel
Solder Tab	Copper Alloy
INSULATING MATERIAL	
Material	PA 6.6
Flammability Class	UL 94 V-0
TEMPERATURES	
Operating Temperature (without mech. load)	-40 °C - 105 °C
WAVE SOLDERING PROCESS	
Soldering Temperature, recommended	260 °C
Peak Soldering Time, recommended	3-4 s
REFLOW PROCESS	
Soldering Temperature, recommended	-
Peak Soldering Time, recommended	-

COLOURS[1]

GREEN, RAL 6018	BLACK, RAL 9011
PEBBLE GREY, RAL 7032	BLUE, RAL 5015
LIGHT GREEN, similar RAL 6018	

ACCESSORIES

	Description	Article Number
	Bridge, 2-pole, insulated, BRI/2-7.5/7.62-L8.2-LIGHT GREY	50000000017
	Screw Cover SC-AK700-YELLOW	50700000004

ORDER DATA (SPACING 7.5 MM)

Poles	Width (mm)	Article Designation	Article Number	PU
2	15.60	AK710/2-7.5-V-GREEN	50710020201E	100
3	23.10	AK710/3-7.5-V-GREEN	50710030201E	100
4	30.60	AK710/4-7.5-V-GREEN	50710040201E	100
5	38.10	AK710/5-7.5-V-GREEN	50710050201E	100
6	45.60	AK710/6-7.5-V-GREEN	50710060201D	50
7	53.10	AK710/7-7.5-V-GREEN	50710070201D	50
8	60.60	AK710/8-7.5-V-GREEN	50710080201D	50
9	68.10	AK710/9-7.5-V-GREEN	50710090201D	50
...	...	...	...	...
12	90.60	AK710/12-7.5-V-GREEN	50710120201D	50

ORDER DATA (SPACING 7.62 MM)

Poles	Width (mm)	Article Designation	Article Number	PU
2	15.84	AKZ710/2-7.62-V-GREEN	50710020213E	100
3	23.46	AKZ710/3-7.62-V-GREEN	50710030213E	100
4	31.08	AKZ710/4-7.62-V-GREEN	50710040213E	100
5	38.70	AKZ710/5-7.62-V-GREEN	50710050213E	100
6	46.32	AKZ710/6-7.62-V-GREEN	50710060213D	50
7	53.94	AKZ710/7-7.62-V-GREEN	50710070213D	50
8	61.56	AKZ710/8-7.62-V-GREEN	50710080213D	50
9	69.18	AKZ710/9-7.62-V-GREEN	50710090213D	50
...	...	...	...	...
12	92.04	AKZ710/12-7.62-V-GREEN	50710120213D	50

RATINGS	c UL us			VDE	
Usegroup	B	C	D		
Rated Voltage	300 V	150 V	300 V	750 V	
Rated Current	20 A	20 A	10 A	24 A	
Rated Wire Size				min	max
solid	AWG 30-12	AWG 30-12	AWG 30-12	0.5 mm²	4.0 mm²
stranded	AWG 30-12	AWG 30-12	AWG 30-12	0.5 mm²	2.5 mm²
Torque (in.lbs)	3.98	3.98	3.98	4.43	
Screw Size	M3	M3	M3	M3	
Test Voltage	1.6 kV	1.3 kV	1.6 kV	3.0 kV	

[1]Colours according to RAL, there may be variations on colour due to production conditions. Special colours on request.

Spacing 9.52 mm

AKZ841/..-9.52-V-GREEN

WIRE SIZES	
solid min	0.2 mm²
solid max	6.0 mm²
stranded min	0.2 mm²
stranded max	4.0 mm²
stranded with ferrule min	0.25 mm²
stranded with ferrule max	4.0 mm²
DIMENSIONS	
Stripped Length	7.0 mm
PCB Hole Diameter	1.6 mm
MATERIALS	
Clamp	Brass
Screw	Steel
Solder Tab	Brass
INSULATING MATERIAL	
Material	PA 6.6
Flammability Class	UL 94 V-0
TEMPERATURES	
Operating Temperature (without mech. load)	-40 °C - 105 °C
WAVE SOLDERING PROCESS	
Soldering Temperature, recommended	260 °C
Peak Soldering Time, recommended	3-4 s
REFLOW PROCESS	
Soldering Temperature, recommended	-
Peak Soldering Time, recommended	-



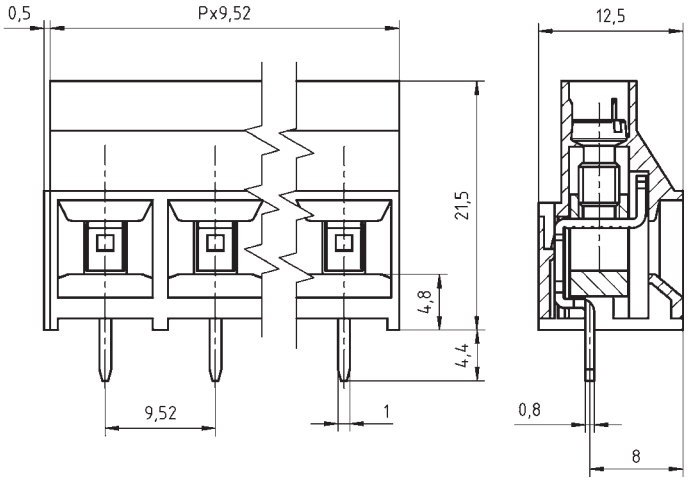

COLOURS[1]

GREEN, RAL 6018

LIGHT GREEN, similar RAL 6018

ORDER DATA (SPACING 9.52 MM)

Poles	Width (mm)	Article Designation	Article Number	PU
2	19.54	AKZ841/2-9.52-V-GREEN	50841020201D	50
3	29.06	AKZ841/3-9.52-V-GREEN	50841030201D	50
4	38.58	AKZ841/4-9.52-V-GREEN	50841040201D	50
5	48.10	AKZ841/5-9.52-V-GREEN	50841050201D	50
6	57.62	AKZ841/6-9.52-V-GREEN	50841060201D	50
7	67.14	AKZ841/7-9.52-V-GREEN	50841070201D	50
8	76.66	AKZ841/8-9.52-V-GREEN	50841080201D	50
9	86.18	AKZ841/9-9.52-V-GREEN	50841090201D	50
10	95.70	AKZ841/10-9.52-V-GREEN	50841100201D	50
11	105.22	AKZ841/11-9.52-V-GREEN	50841110201D	50
12	114.74	AKZ841/12-9.52-V-GREEN	50841120201D	50
13	124.26	AKZ841/13-9.52-V-GREEN	50841130201D	50
14	133.78	AKZ841/14-9.52-V-GREEN	50841140201D	50
15	143.30	AKZ841/15-9.52-V-GREEN	50841150201D	50
16	152.82	AKZ841/16-9.52-V-GREEN	50841160201D	50

RATINGS	c UL us			VDE	
Usegroup	B	C	D		
Rated Voltage	300 V	300 V	600 V	1.000 V	
Rated Current	30 A	30 A	5 A	32 A	
Rated Wire Size				min	max
solid	AWG 28-10	AWG 28-10	AWG 28-10	0.2 mm²	4.0 mm²
stranded	AWG 28-10	AWG 28-10	AWG 28-10	0.2 mm²	4.0 mm²
Torque (in.lbs)	7.08	7.08	7.08	7.08	
Screw Size	M3.5	M3.5	M3.5	M3.5	
Test Voltage	1.6 kV	1.6 kV	2.2 kV	3.5 kV	

[1]Colours according to RAL, there may be variations on colour due to production conditions. Special colours on request.

L'IMPULSION
Retrouvez nous sur
www.limpulsion.fr

AKZ250/..-10.16-V-GREEN

Spacing 10.16 mm



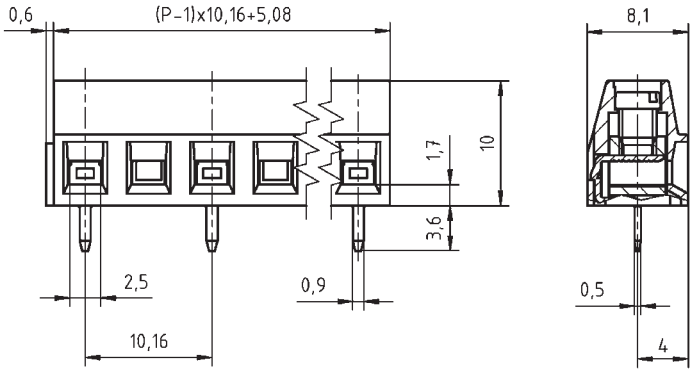

WIRE SIZES	
solid min	0.14 mm²
solid max	1.5 mm²
stranded min	0.14 mm²
stranded max	1.5 mm²
stranded with ferrule min	0.25 mm²
stranded with ferrule max	1.5 mm²
DIMENSIONS	
Stripped Length	6.0 mm
PCB Hole Diameter	1.3 mm
MATERIALS	
Clamp	Brass
Screw	Steel
Solder Tab	Bronze
INSULATING MATERIAL	
Material	PA 6.6
Flammability Class	UL 94 V-0
TEMPERATURES	
Operating Temperature (without mech. load)	-40 °C - 105 °C
WAVE SOLDERING PROCESS	
Soldering Temperature, recommended	260 °C
Peak Soldering Time, recommended	3-4 s
REFLOW PROCESS	
Soldering Temperature, recommended	-
Peak Soldering Time, recommended	-

COLOURS[1]	
GREEN, RAL 6018	LIGHT GREEN, similar RAL 6018

ORDER DATA (SPACING 10.16 MM)

Poles	Width (mm)	Article Designation	Article Number	PU
2	15.84	AKZ250/2-10.16-V-GREEN	50250020021F	200
3	26.00	AKZ250/3-10.16-V-GREEN	50250030021F	200
4	36.16	AKZ250/4-10.16-V-GREEN	50250040021E	100
5	46.32	AKZ250/5-10.16-V-GREEN	50250050021E	100
6	56.48	AKZ250/6-10.16-V-GREEN	50250060021D	50

RATINGS	cULus			VDE	
Usegroup	B	C	D		
Rated Voltage	300 V	150 V	300 V	1.000 V	
Rated Current	15 A	15 A	10 A	13 A	
Rated Wire Size				min	max
solid	AWG 28-14	AWG 28-14	AWG 28-14	0.5 mm²	1.5 mm²
stranded	AWG 28-14	AWG 28-14	AWG 28-14	0.5 mm²	1.5 mm²
Torque (in.lbs)	4.43	4.43	4.43	4.43	
Screw Size	M3	M3	M3	M3	
Test Voltage	1.6 kV	1.3 kV	1.6 kV	3.5 kV	

[1]Colours according to RAL, there may be variations on colour due to production conditions. Special colours on request.

Spacing 10.0 mm / Spacing 10.16 mm

AK350/..-10.0-V-GREEN
AKZ350/..-10.16-V-GREEN



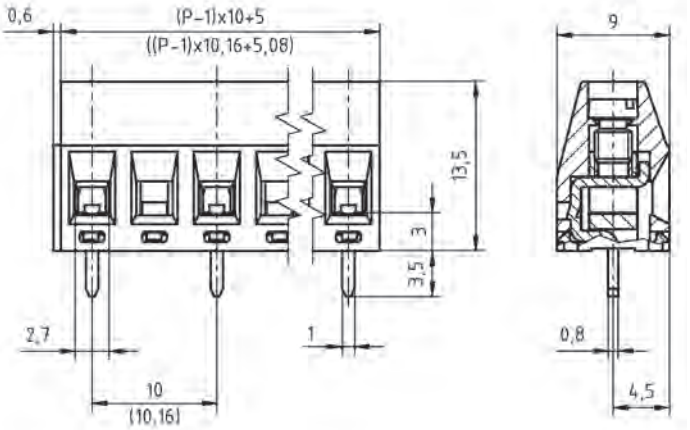

WIRE SIZES	
solid min	0.14 mm²
solid max	2.5 mm²
stranded min	0.14 mm²
stranded max	1.5 mm²
stranded with ferrule min	0.25 mm²
stranded with ferrule max	1.5 mm²
DIMENSIONS	
Stripped Length	6.0 mm
PCB Hole Diameter	1.3 mm
MATERIALS	
Clamp	Brass
Screw	Steel
Solder Tab	Brass
INSULATING MATERIAL	
Material	PA 6.6
Flammability Class	UL 94 V-0
TEMPERATURES	
Operating Temperature (without mech. load)	-40 °C - 105 °C
WAVE SOLDERING PROCESS	
Soldering Temperature, recommended	260 °C
Peak Soldering Time, recommended	3-4 s
REFLOW PROCESS	
Soldering Temperature, recommended	-
Peak Soldering Time, recommended	-

COLOURS[1]

	GREEN, RAL 6018		LIGHT GREY, RAL 7035
	BLUE, RAL 5015		LIGHT GREEN, similar RAL 6018

ORDER DATA (SPACING 10.0 MM)

Poles	Width (mm)	Article Designation	Article Number	PU
2	15.60	AK350/2-10.0-V-GREEN	50350020025F	200
3	25.60	AK350/3-10.0-V-GREEN	50350030025F	200
4	35.60	AK350/4-10.0-V-GREEN	50350040025E	100
5	45.60	AK350/5-10.0-V-GREEN	50350050025E	100
6	55.60	AK350/6-10.0-V-GREEN	50350060025D	50
7	65.60	AK350/7-10.0-V-GREEN	50350070025D	50
8	75.60	AK350/8-10.0-V-GREEN	50350080025D	50
9	85.60	AK350/9-10.0-V-GREEN	50350090025D	50
...	...	...	...	...
12	115.60	AK350/12-10.0-V-GREEN	50350120025D	50

ORDER DATA (SPACING 10.16 MM)

Poles	Width (mm)	Article Designation	Article Number	PU
2	15.84	AKZ350/2-10.16-V-GREEN	50350020021F	200
3	26.00	AKZ350/3-10.16-V-GREEN	50350030021F	200
4	36.16	AKZ350/4-10.16-V-GREEN	50350040021E	100
5	46.32	AKZ350/5-10.16-V-GREEN	50350050021E	100
6	56.48	AKZ350/6-10.16-V-GREEN	50350060021D	50
7	66.64	AKZ350/7-10.16-V-GREEN	50350070021D	50
8	76.80	AKZ350/8-10.16-V-GREEN	50350080021D	50
9	86.96	AKZ350/9-10.16-V-GREEN	50350090021D	50
...	...	...	...	...
12	117.44	AKZ350/12-10.16-V-GREEN	50350120021D	50

RATINGS	c UL us			VDE	
Usegroup	B	C	D		
Rated Voltage	300 V	150 V	300 V	1.000 V	
Rated Current	15 A	15 A	10 A	17.5 A	
Rated Wire Size				min	max
solid	AWG 22-12	AWG 22-12	AWG 22-12	0.5 mm²	2.5 mm²
stranded	AWG 22-12	AWG 22-12	AWG 22-12	0.5 mm²	1.5 mm²
Torque (in.lbs)	4.43	4.43	4.43	4.43	
Screw Size	M3	M3	M3	M3	
Test Voltage	1.6 kV	1.3 kV	1.6 kV	3.5 kV	

[1]Colours according to RAL, there may be variations on colour due to production conditions. Special colours on request.

L'IMPULSION
Retrouvez nous sur
www.limpulsion.fr

AK350/..-10.0-V-GREEN-HC
AKZ350/..-10.16-V-GREEN-HC

Spacing 10.0 mm / Spacing 10.16 mm



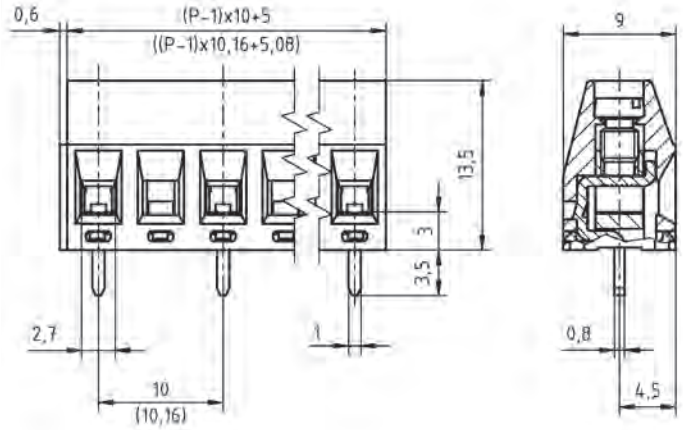

WIRE SIZES	
solid min	0.14 mm²
solid max	2.5 mm²
stranded min	0.14 mm²
stranded max	1.5 mm²
stranded with ferrule min	0.25 mm²
stranded with ferrule max	1.5 mm²
DIMENSIONS	
Stripped Length	6.0 mm
PCB Hole Diameter	1.3 mm
MATERIALS	
Clamp	Brass
Screw	Steel
Solder Tab	Copper Alloy
INSULATING MATERIAL	
Material	PA 6.6
Flammability Class	UL 94 V-0
TEMPERATURES	
Operating Temperature (without mech. load)	-40 °C - 105 °C
WAVE SOLDERING PROCESS	
Soldering Temperature, recommended	260 °C
Peak Soldering Time, recommended	3-4 s
REFLOW PROCESS	
Soldering Temperature, recommended	-
Peak Soldering Time, recommended	-

COLOURS[1]			
	GREEN, RAL 6018		LIGHT GREY, RAL 7035
	BLUE, RAL 5015		LIGHT GREEN, similar RAL 6018

RATINGS	cULus			VDE	
Usegroup	B	C	D		
Rated Voltage	300 V	150 V	300 V	1.000 V	
Rated Current	19 A	19 A	10 A	24 A	
Rated Wire Size				min	max
solid	AWG 22-12	AWG 22-12	AWG 22-12	0.5 mm²	2.5 mm²
stranded	AWG 22-12	AWG 22-12	AWG 22-12	0.5 mm²	1.5 mm²
Torque (in.lbs)	4.43	4.43	4.43	4.43	
Screw Size	M3	M3	M3	M3	
Test Voltage	1.6 kV	1.3 kV	1.6 kV	3.5 kV	

ORDER DATA (SPACING 10.0 MM)

Poles	Width (mm)	Article Designation	Article Number	PU
2	15.60	AK350/2-10.0-V-GREEN-HC	50350020925F	200
3	25.60	AK350/3-10.0-V-GREEN-HC	50350030925F	200
4	35.60	AK350/4-10.0-V-GREEN-HC	50350040925E	100
5	45.60	AK350/5-10.0-V-GREEN-HC	50350050925E	100
6	55.60	AK350/6-10.0-V-GREEN-HC	50350060925D	50
7	65.60	AK350/7-10.0-V-GREEN-HC	50350070925D	50
8	75.60	AK350/8-10.0-V-GREEN-HC	50350080925D	50
9	85.60	AK350/9-10.0-V-GREEN-HC	50350090925D	50
...	...	...	...	...
12	115.60	AK350/12-10.0-V-GREEN-HC	50350120925D	50

ORDER DATA (SPACING 10.16 MM)

Poles	Width (mm)	Article Designation	Article Number	PU
2	15.84	AKZ350/2-10.16-V-GREEN-HC	50350020921F	200
3	26.00	AKZ350/3-10.16-V-GREEN-HC	50350030921F	200
4	36.16	AKZ350/4-10.16-V-GREEN-HC	50350040921E	100
5	46.32	AKZ350/5-10.16-V-GREEN-HC	50350050921E	100
6	56.48	AKZ350/6-10.16-V-GREEN-HC	50350060921D	50
7	66.64	AKZ350/7-10.16-V-GREEN-HC	50350070921D	50
8	76.80	AKZ350/8-10.16-V-GREEN-HC	50350080921D	50
9	86.96	AKZ350/9-10.16-V-GREEN-HC	50350090921D	50
...	...	...	...	...
12	117.44	AKZ350/12-10.16-V-GREEN-HC	50350120921D	50

[1]Colours according to RAL, there may be variations on colour due to production conditions. Special colours on request.

Spacing 10.0 mm / Spacing 10.16 mm

AK350/..-10.0-H-GREEN
AKZ350/..-10.16-H-GREEN

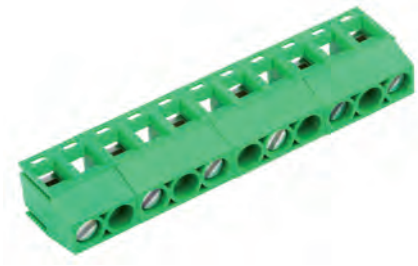

WIRE SIZES	
solid min	0.14 mm²
solid max	2.5 mm²
stranded min	0.14 mm²
stranded max	1.5 mm²
stranded with ferrule min	0.25 mm²
stranded with ferrule max	1.5 mm²
DIMENSIONS	
Stripped Length	6.0 mm
PCB Hole Diameter	1.3 mm
MATERIALS	
Clamp	Brass
Screw	Steel
Solder Tab	Brass
INSULATING MATERIAL	
Material	PA 6.6
Flammability Class	UL 94 V-0
TEMPERATURES	
Operating Temperature (without mech. load)	-40 °C - 105 °C
WAVE SOLDERING PROCESS	
Soldering Temperature, recommended	260 °C
Peak Soldering Time, recommended	3-4 s
REFLOW PROCESS	
Soldering Temperature, recommended	-
Peak Soldering Time, recommended	-

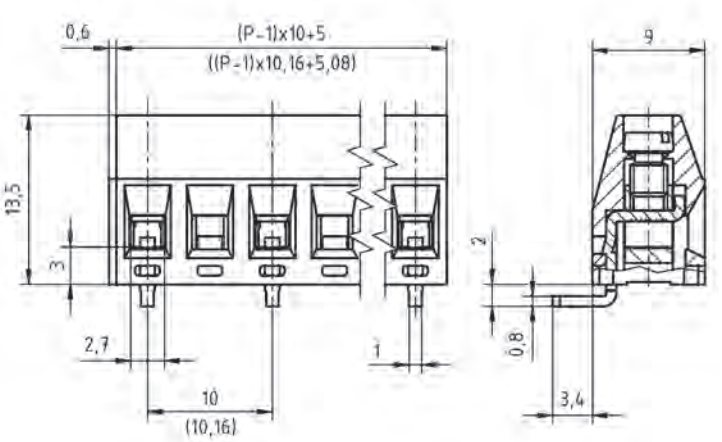

COLOURS[1]			
GREEN, RAL 6018		LIGHT GREY, RAL 7035	
BLUE, RAL 5015		LIGHT GREEN, similar RAL 6018	

ORDER DATA (SPACING 10.0 MM)

Poles	Width (mm)	Article Designation	Article Number	PU
2	15.60	AK350/2-10.0-H-GREEN	50350020225F	200
3	25.60	AK350/3-10.0-H-GREEN	50350030225F	200
4	35.60	AK350/4-10.0-H-GREEN	50350040225E	100
5	45.60	AK350/5-10.0-H-GREEN	50350050225E	100
6	55.60	AK350/6-10.0-H-GREEN	50350060225D	50
7	65.60	AK350/7-10.0-H-GREEN	50350070225D	50
8	75.60	AK350/8-10.0-H-GREEN	50350080225D	50
9	85.60	AK350/9-10.0-H-GREEN	50350090225D	50
...	...	...	...	...
12	115.60	AK350/12-10.0-H-GREEN	50350120225D	50

ORDER DATA (SPACING 10.16 MM)

Poles	Width (mm)	Article Designation	Article Number	PU
2	15.84	AKZ350/2-10.16-H-GREEN	50350020221F	200
3	26.00	AKZ350/3-10.16-H-GREEN	50350030221F	200
4	36.16	AKZ350/4-10.16-H-GREEN	50350040221E	100
5	46.32	AKZ350/5-10.16-H-GREEN	50350050221E	100
6	56.48	AKZ350/6-10.16-H-GREEN	50350060221D	50
7	66.64	AKZ350/7-10.16-H-GREEN	50350070221D	50
8	76.80	AKZ350/8-10.16-H-GREEN	50350080221D	50
9	86.96	AKZ350/9-10.16-H-GREEN	50350090221D	50
...	...	...	...	...
12	117.44	AKZ350/12-10.16-H-GREEN	50350120221D	50

RATINGS	c UL us			VDE	
Usegroup	B	C	D		
Rated Voltage	300 V	150 V	300 V	1.000 V	
Rated Current	15 A	15 A	10 A	17.5 A	
Rated Wire Size				min	max
solid	AWG 22-12	AWG 22-12	AWG 22-12	0.5 mm²	2.5 mm²
stranded	AWG 22-12	AWG 22-12	AWG 22-12	0.5 mm²	1.5 mm²
Torque (in.lbs)	4.43	4.43	4.43	4.43	
Screw Size	M3	M3	M3	M3	
Test Voltage	1.6 kV	1.3 kV	1.6 kV	3.5 kV	

[1]Colours according to RAL, there may be variations on colour due to production conditions. Special colours on request.

L'IMPULSION
Retrouvez nous sur
www.limpulsion.fr

AK350/..-10.0-H-GREEN-HC
AKZ350/..-10.16-H-GREEN-HC

Spacing 10.0 mm / Spacing 10.16 mm



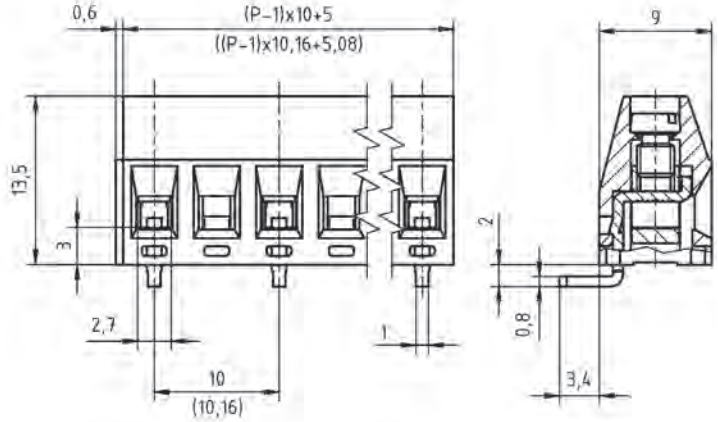

WIRE SIZES	
solid min	0.14 mm²
solid max	2.5 mm²
stranded min	0.14 mm²
stranded max	1.5 mm²
stranded with ferrule min	0.25 mm²
stranded with ferrule max	1.5 mm²
DIMENSIONS	
Stripped Length	6.0 mm
PCB Hole Diameter	1.3 mm
MATERIALS	
Clamp	Brass
Screw	Steel
Solder Tab	Copper Alloy
INSULATING MATERIAL	
Material	PA 6.6
Flammability Class	UL 94 V-0
TEMPERATURES	
Operating Temperature (without mech. load)	-40 °C - 105 °C
WAVE SOLDERING PROCESS	
Soldering Temperature, recommended	260 °C
Peak Soldering Time, recommended	3-4 s
REFLOW PROCESS	
Soldering Temperature, recommended	-
Peak Soldering Time, recommended	-

COLOURS[1]			
	GREEN, RAL 6018		LIGHT GREY, RAL 7035
	BLUE, RAL 5015		LIGHT GREEN, similar RAL 6018

RATINGS	cULus			VDE	
Usegroup	B	C	D		
Rated Voltage	300 V	150 V	300 V	1.000 V	
Rated Current	19 A	19 A	10 A	24 A	
Rated Wire Size				min	max
solid	AWG 22-12	AWG 22-12	AWG 22-12	0.5 mm²	2.5 mm²
stranded	AWG 22-12	AWG 22-12	AWG 22-12	0.5 mm²	1.5 mm²
Torque (in.lbs)	4.43	4.43	4.43	4.43	
Screw Size	M3	M3	M3	M3	
Test Voltage	1.6 kV	1.3 kV	1.6 kV	3.5 kV	

ORDER DATA (SPACING 10.0 MM)

Poles	Width (mm)	Article Designation	Article Number	PU
2	15.60	AK350/2-10.0-H-GREEN-HC	50350020226F	200
3	25.60	AK350/3-10.0-H-GREEN-HC	50350030226F	200
4	35.60	AK350/4-10.0-H-GREEN-HC	50350040226E	100
5	45.60	AK350/5-10.0-H-GREEN-HC	50350050226E	100
6	55.60	AK350/6-10.0-H-GREEN-HC	50350060226D	50
7	65.60	AK350/7-10.0-H-GREEN-HC	50350070226D	50
8	75.60	AK350/8-10.0-H-GREEN-HC	50350080226D	50
9	85.60	AK350/9-10.0-H-GREEN-HC	50350090226D	50
...	...	...	...	...
12	115.60	AK350/12-10.0-H-GREEN-HC	50350120226D	50

ORDER DATA (SPACING 10.16 MM)

Poles	Width (mm)	Article Designation	Article Number	PU
2	15.84	AKZ350/2-10.16-H-GREEN-HC	50350020229F	200
3	26.00	AKZ350/3-10.16-H-GREEN-HC	50350030229F	200
4	36.16	AKZ350/4-10.16-H-GREEN-HC	50350040229E	100
5	46.32	AKZ350/5-10.16-H-GREEN-HC	50350050229E	100
6	56.48	AKZ350/6-10.16-H-GREEN-HC	50350060229D	50
7	66.64	AKZ350/7-10.16-H-GREEN-HC	50350070229D	50
8	76.80	AKZ350/8-10.16-H-GREEN-HC	50350080229D	50
9	86.96	AKZ350/9-10.16-H-GREEN-HC	50350090229D	50
...	...	...	...	...
12	117.44	AKZ350/12-10.16-H-GREEN-HC	50350120229D	50

[1]Colours according to RAL, there may be variations on colour due to production conditions. Special colours on request.

Spacing 5.0 mm
1- to n-poles

AK2200/..-5.0-V-GREEN

WIRE SIZES	
solid min	0.2 mm²
solid max	4.0 mm²
stranded min	0.2 mm²
stranded max	2.5 mm²
stranded with ferrule min	0.25 mm²
stranded with ferrule max	2.5 mm²
DIMENSIONS	
Stripped Length	9.0 mm
PCB Hole Diameter	1.3 mm
MATERIALS	
Screw	Steel
Solder Tab	Copper Alloy
Clamp Cage	Steel
Excenter	Steel
INSULATING MATERIAL	
Material	PA 6.6
Flammability Class	UL 94 V-0
TEMPERATURES	
Operating Temperature (without mech. load)	-40 °C - 105 °C
WAVE SOLDERING PROCESS	
Soldering Temperature, recommended	260 °C
Peak Soldering Time, recommended	3-4 s
REFLOW PROCESS	
Soldering Temperature, recommended	-
Peak Soldering Time, recommended	-



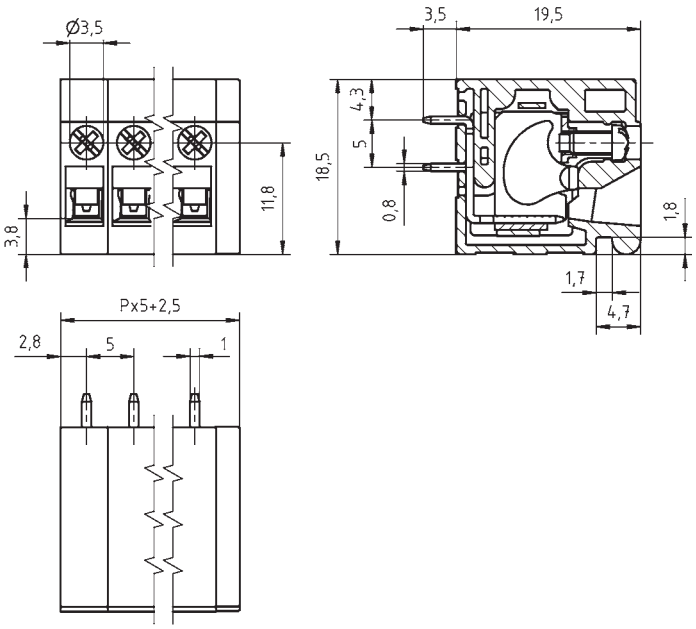

COLOURS[1]

GREEN, RAL 6018		BLACK, RAL 9011	
LIGHT GREEN, similar RAL 6018			

ORDER DATA (SPACING 5.0 MM)

Poles	Width (mm)	Article Designation	Article Number	PU
1	7.50	AK2200/1-5.0-V-GREEN	52200010001E	100
2	12.50	AK2200/2-5.0-V-GREEN	52200020001D	50
3	17.50	AK2200/3-5.0-V-GREEN	52200030001D	50
4	22.50	AK2200/4-5.0-V-GREEN	52200040001D	50
5	27.50	AK2200/5-5.0-V-GREEN	52200050001D	50
6	32.50	AK2200/6-5.0-V-GREEN	52200060001D	50
7	37.50	AK2200/7-5.0-V-GREEN	52200070001D	50
8	42.50	AK2200/8-5.0-V-GREEN	52200080001D	50
9	47.50	AK2200/9-5.0-V-GREEN	52200090001D	50
10	52.50	AK2200/10-5.0-V-GREEN	52200100001D	50
11	57.50	AK2200/11-5.0-V-GREEN	52200110001D	50
12	62.50	AK2200/12-5.0-V-GREEN	52200120001D	50

ACCESSORIES

	Description	Article Number
	Spacer SPC-AK2200-GREEN	52200000002

RATINGS

	c UL us			VDE	
Usegroup	B	C	D		
Rated Voltage	300 V	150 V	300 V	250 V	
Rated Current	20 A	20 A	10 A	24 A	
Rated Wire Size				min	max
solid	AWG 30-12	AWG 30-12	AWG 30-12	0.5 mm²	2.5 mm²
stranded	AWG 30-12	AWG 30-12	AWG 30-12	0.5 mm²	2.5 mm²
Torque (in.lbs)	4.43	4.43	4.43	4.43	
Screw Size	M2.5	M2.5	M2.5	M2.5	
Test Voltage	1.6 kV	1.3 kV	1.6 kV	2.0 kV	

[1]Colours according to RAL, there may be variations on colour due to production conditions. Special colours on request.

L'IMPULSION
Retrouvez nous sur
www.limpulsion.fr

AK2200/..-5.0-H-GREEN

Spacing 5.0 mm
1- to n-poles



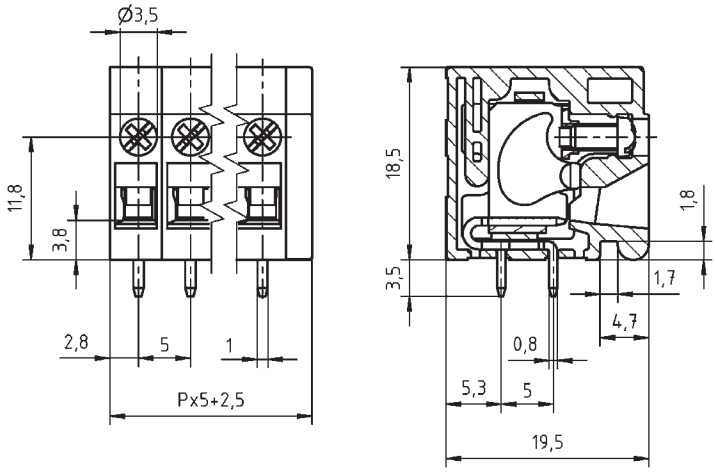

WIRE SIZES	
solid min	0.2 mm²
solid max	4.0 mm²
stranded min	0.2 mm²
stranded max	2.5 mm²
stranded with ferrule min	0.25 mm²
stranded with ferrule max	2.5 mm²
DIMENSIONS	
Stripped Length	9.0 mm
PCB Hole Diameter	1.3 mm
MATERIALS	
Screw	Steel
Solder Tab	Copper Alloy
Clamp Cage	Steel
Excenter	Steel
INSULATING MATERIAL	
Material	PA 6.6
Flammability Class	UL 94 V-0
TEMPERATURES	
Operating Temperature (without mech. load)	-40 °C - 105 °C
WAVE SOLDERING PROCESS	
Soldering Temperature, recommended	260 °C
Peak Soldering Time, recommended	3-4 s
REFLOW PROCESS	
Soldering Temperature, recommended	-
Peak Soldering Time, recommended	-

COLOURS[1]

GREEN, RAL 6018		BLACK, RAL 9011	
LIGHT GREEN, similar RAL 6018			

ACCESSORIES

	Description	Article Number
	Spacer SPC-AK2200-GREEN	52200000002

ORDER DATA (SPACING 5.0 MM)

Poles	Width (mm)	Article Designation	Article Number	PU
1	7.50	AK2200/1-5.0-H-GREEN	52200010051E	100
2	12.50	AK2200/2-5.0-H-GREEN	52200020051D	50
3	17.50	AK2200/3-5.0-H-GREEN	52200030051D	50
4	22.50	AK2200/4-5.0-H-GREEN	52200040051D	50
5	27.50	AK2200/5-5.0-H-GREEN	52200050051D	50
6	32.50	AK2200/6-5.0-H-GREEN	52200060051D	50
7	37.50	AK2200/7-5.0-H-GREEN	52200070051D	50
8	42.50	AK2200/8-5.0-H-GREEN	52200080051D	50
9	47.50	AK2200/9-5.0-H-GREEN	52200090051D	50
10	52.50	AK2200/10-5.0-H-GREEN	52200100051D	50
11	57.50	AK2200/11-5.0-H-GREEN	52200110051D	50
12	62.50	AK2200/12-5.0-H-GREEN	52200120051D	50

RATINGS

	c UL us			VDE	
Usegroup	B	C	D		
Rated Voltage	300 V	150 V	300 V	250 V	
Rated Current	20 A	20 A	10 A	24 A	
Rated Wire Size				min	max
solid	AWG 30-12	AWG 30-12	AWG 30-12	0.5 mm²	2.5 mm²
stranded	AWG 30-12	AWG 30-12	AWG 30-12	0.5 mm²	2.5 mm²
Torque (in.lbs)	4.43	4.43	4.43	4.43	
Screw Size	M2.5	M2.5	M2.5	M2.5	
Test Voltage	1.6 kV	1.3 kV	1.6 kV	2.0 kV	

[1]Colours according to RAL, there may be variations on colour due to production conditions. Special colours on request.

Spacing 7.5 mm
2- to n-poles

AK2200/..-7.5-V-GREEN

WIRE SIZES	
solid min	0.2 mm²
solid max	4.0 mm²
stranded min	0.2 mm²
stranded max	2.5 mm²
stranded with ferrule min	0.25 mm²
stranded with ferrule max	2.5 mm²
DIMENSIONS	
Stripped Length	9.0 mm
PCB Hole Diameter	1.3 mm
MATERIALS	
Screw	Steel
Solder Tab	Copper Alloy
Clamp Cage	Steel
Excenter	Steel
INSULATING MATERIAL	
Material	PA 6.6
Flammability Class	UL 94 V-0
TEMPERATURES	
Operating Temperature (without mech. load)	-40 °C - 105 °C
WAVE SOLDERING PROCESS	
Soldering Temperature, recommended	260 °C
Peak Soldering Time, recommended	3-4 s
REFLOW PROCESS	
Soldering Temperature, recommended	-
Peak Soldering Time, recommended	-



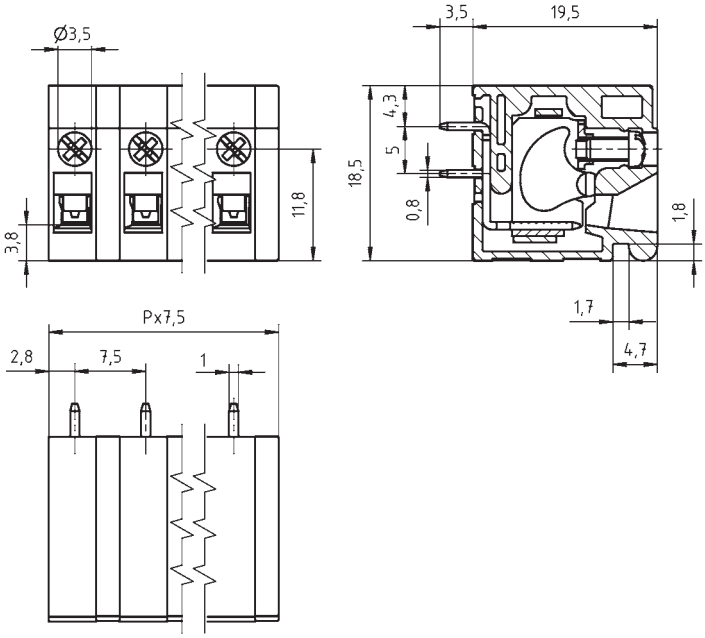

COLOURS[1]

	GREEN, RAL 6018		BLACK, RAL 9011
	LIGHT GREEN, similar RAL 6018		

ORDER DATA (SPACING 7.5 MM)

Poles	Width (mm)	Article Designation	Article Number	PU
2	15.00	AK2200/2-7.5-V-GREEN	52200020021D	50
3	22.50	AK2200/3-7.5-V-GREEN	52200030021D	50
4	30.00	AK2200/4-7.5-V-GREEN	52200040021D	50
5	37.50	AK2200/5-7.5-V-GREEN	52200050021D	50
6	45.00	AK2200/6-7.5-V-GREEN	52200060021D	50
7	52.50	AK2200/7-7.5-V-GREEN	52200070021D	50
8	60.00	AK2200/8-7.5-V-GREEN	52200080021D	50
9	67.50	AK2200/9-7.5-V-GREEN	52200090021D	50
10	75.00	AK2200/10-7.5-V-GREEN	52200100021D	50
11	82.50	AK2200/11-7.5-V-GREEN	52200110021D	50
12	90.00	AK2200/12-7.5-V-GREEN	52200120021D	50

ACCESSORIES

	Description	Article Number
	Spacer SPC-AK2200-GREEN	52200000002

RATINGS

	cULus			VDE	
Usegroup	B	C	D		
Rated Voltage	300 V	150 V	300 V	450 V	
Rated Current	20 A	20 A	10 A	24 A	
Rated Wire Size				min	max
solid	AWG 30-12	AWG 30-12	AWG 30-12	0.5 mm²	2.5 mm²
stranded	AWG 30-12	AWG 30-12	AWG 30-12	0.5 mm²	2.5 mm²
Torque (in.lbs)	4.43	4.43	4.43	4.43	
Screw Size	M2.5	M2.5	M2.5	M2.5	
Test Voltage	1.6 kV	1.3 kV	1.6 kV	2.5 kV	

[1]Colours according to RAL, there may be variations on colour due to production conditions. Special colours on request.

L'IMPULSION
Retrouvez nous sur
www.limpulsion.fr

AK2200/..-7.5-H-GREEN

Spacing 7.5 mm
2- to n-poles



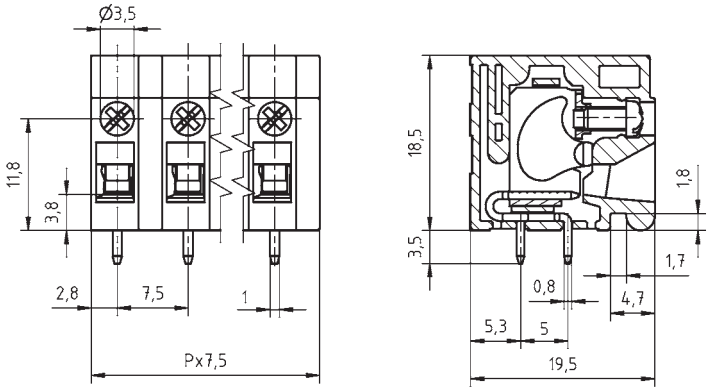

WIRE SIZES	
solid min	0.2 mm²
solid max	4.0 mm²
stranded min	0.2 mm²
stranded max	2.5 mm²
stranded with ferrule min	0.25 mm²
stranded with ferrule max	2.5 mm²
DIMENSIONS	
Stripped Length	9.0 mm
PCB Hole Diameter	1.3 mm
MATERIALS	
Screw	Steel
Solder Tab	Copper Alloy
Clamp Cage	Steel
Excenter	Steel
INSULATING MATERIAL	
Material	PA 6.6
Flammability Class	UL 94 V-0
TEMPERATURES	
Operating Temperature (without mech. load)	-40 °C - 105 °C
WAVE SOLDERING PROCESS	
Soldering Temperature, recommended	260 °C
Peak Soldering Time, recommended	3-4 s
REFLOW PROCESS	
Soldering Temperature, recommended	-
Peak Soldering Time, recommended	-

COLOURS[1]

GREEN, RAL 6018	BLACK, RAL 9011
LIGHT GREEN, similar RAL 6018	

ACCESSORIES

	Description	Article Number
	Spacer SPC-AK2200-GREEN	52200000002

ORDER DATA (SPACING 7.5 MM)

Poles	Width (mm)	Article Designation	Article Number	PU
2	15.00	AK2200/2-7.5-H-GREEN	52200020071D	50
3	22.50	AK2200/3-7.5-H-GREEN	52200030071D	50
4	30.00	AK2200/4-7.5-H-GREEN	52200040071D	50
5	37.50	AK2200/5-7.5-H-GREEN	52200050071D	50
6	45.00	AK2200/6-7.5-H-GREEN	52200060071D	50
7	52.50	AK2200/7-7.5-H-GREEN	52200070071D	50
8	60.00	AK2200/8-7.5-H-GREEN	52200080071D	50
9	67.50	AK2200/9-7.5-H-GREEN	52200090071D	50
10	75.00	AK2200/10-7.5-H-GREEN	52200100071D	50
11	82.50	AK2200/11-7.5-H-GREEN	52200110071D	50
12	90.00	AK2200/12-7.5-H-GREEN	52200120071D	50

RATINGS

	c UL us			VDE	
Usegroup	B	C	D		
Rated Voltage	300 V	150 V	300 V	450 V	
Rated Current	20 A	20 A	10 A	24 A	
Rated Wire Size				min	max
solid	AWG 30-12	AWG 30-12	AWG 30-12	0.5 mm²	2.5 mm²
stranded	AWG 30-12	AWG 30-12	AWG 30-12	0.5 mm²	2.5 mm²
Torque (in.lbs)	4.43	4.43	4.43	4.43	
Screw Size	M2.5	M2.5	M2.5	M2.5	
Test Voltage	1.6 kV	1.3 kV	1.6 kV	2.5 kV	

[1]Colours according to RAL, there may be variations on colour due to production conditions. Special colours on request.

Spacing 10.0 mm
2- to n-poles

AK2200/..-10.0-V-GREEN

WIRE SIZES	
solid min	0.2 mm²
solid max	4.0 mm²
stranded min	0.2 mm²
stranded max	2.5 mm²
stranded with ferrule min	0.25 mm²
stranded with ferrule max	2.5 mm²
DIMENSIONS	
Stripped Length	9.0 mm
PCB Hole Diameter	1.3 mm
MATERIALS	
Screw	Steel
Solder Tab	Copper Alloy
Clamp Cage	Steel
Excenter	Steel
INSULATING MATERIAL	
Material	PA 6.6
Flammability Class	UL 94 V-0
TEMPERATURES	
Operating Temperature (without mech. load)	-40 °C - 105 °C
WAVE SOLDERING PROCESS	
Soldering Temperature, recommended	260 °C
Peak Soldering Time, recommended	3-4 s
REFLOW PROCESS	
Soldering Temperature, recommended	-
Peak Soldering Time, recommended	-



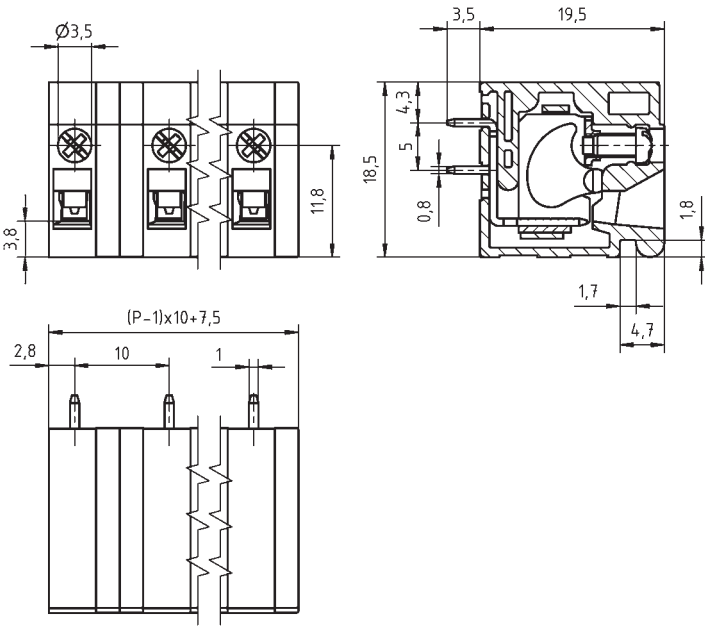

COLOURS[1]

GREEN, RAL 6018		BLACK, RAL 9011	
LIGHT GREEN, similar RAL 6018			

ORDER DATA (SPACING 10.0 MM)

Poles	Width (mm)	Article Designation	Article Number	PU
2	17.50	AK2200/2-10.0-V-GREEN	52200020041D	50
3	27.50	AK2200/3-10.0-V-GREEN	52200030041D	50
4	37.50	AK2200/4-10.0-V-GREEN	52200040041D	50
5	47.50	AK2200/5-10.0-V-GREEN	52200050041D	50
6	57.50	AK2200/6-10.0-V-GREEN	52200060041D	50
7	67.50	AK2200/7-10.0-V-GREEN	52200070041D	50
8	77.50	AK2200/8-10.0-V-GREEN	52200080041D	50
9	87.50	AK2200/9-10.0-V-GREEN	52200090041D	50
10	97.50	AK2200/10-10.0-V-GREEN	52200100041D	50
11	107.50	AK2200/11-10.0-V-GREEN	52200110041D	50
12	117.50	AK2200/12-10.0-V-GREEN	52200120041D	50

ACCESSORIES

	Description	Article Number
	Spacer SPC-AK2200-GREEN	52200000002

RATINGS

	c UL us			VDE	
Usegroup	B	C	D		
Rated Voltage	600 V	-	600 V	1.000 V	
Rated Current	20 A	-	5 A	24 A	
Rated Wire Size				min	max
solid	AWG 30-12	-	AWG 30-12	0.5 mm²	2.5 mm²
stranded	AWG 30-12	-	AWG 30-12	0.5 mm²	2.5 mm²
Torque (in.lbs)	4.43	-	4.43	4.43	
Screw Size	M2.5	-	M2.5	M2.5	
Test Voltage	2.2 kV	-	2.2 kV	3.5 kV	

[1]Colours according to RAL, there may be variations on colour due to production conditions. Special colours on request.

L'IMPULSION
Retrouvez nous sur
www.limpulsion.fr

AK2200/..-10.0-H-GREEN

Spacing 10.0 mm
2- to n-poles



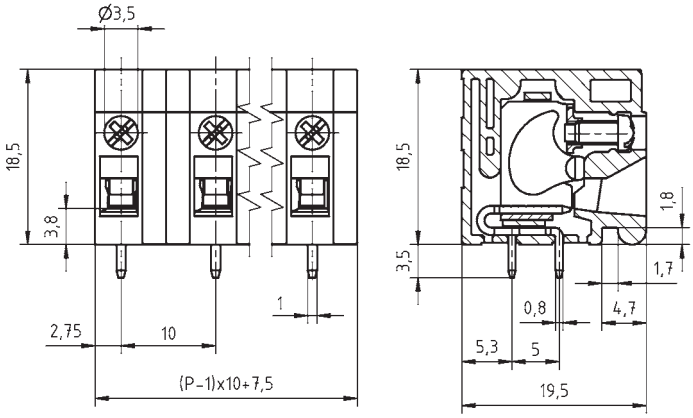

WIRE SIZES	
solid min	0.2 mm²
solid max	4.0 mm²
stranded min	0.2 mm²
stranded max	2.5 mm²
stranded with ferrule min	0.25 mm²
stranded with ferrule max	2.5 mm²
DIMENSIONS	
Stripped Length	9.0 mm
PCB Hole Diameter	1.3 mm
MATERIALS	
Screw	Steel
Solder Tab	Copper Alloy
Clamp Cage	Steel
Excenter	Steel
INSULATING MATERIAL	
Material	PA 6.6
Flammability Class	UL 94 V-0
TEMPERATURES	
Operating Temperature (without mech. load)	-40 °C - 105 °C
WAVE SOLDERING PROCESS	
Soldering Temperature, recommended	260 °C
Peak Soldering Time, recommended	3-4 s
REFLOW PROCESS	
Soldering Temperature, recommended	-
Peak Soldering Time, recommended	-

COLOURS[1]

GREEN, RAL 6018		BLACK, RAL 9011	
LIGHT GREEN, similar RAL 6018			

ACCESSORIES

	Description	Article Number
	Spacer SPC-AK2200-GREEN	52200000002

ORDER DATA (SPACING 10.0 MM)

Poles	Width (mm)	Article Designation	Article Number	PU
2	17.50	AK2200/2-10.0-H-GREEN	52200020091D	50
3	27.50	AK2200/3-10.0-H-GREEN	52200030091D	50
4	37.50	AK2200/4-10.0-H-GREEN	52200040091D	50
5	47.50	AK2200/5-10.0-H-GREEN	52200050091D	50
6	57.50	AK2200/6-10.0-H-GREEN	52200060091D	50
7	67.50	AK2200/7-10.0-H-GREEN	52200070091D	50
8	77.50	AK2200/8-10.0-H-GREEN	52200080091D	50
9	87.50	AK2200/9-10.0-H-GREEN	52200090091D	50
10	97.50	AK2200/10-10.0-H-GREEN	52200100091D	50
11	107.50	AK2200/11-10.0-H-GREEN	52200110091D	50
12	117.50	AK2200/12-10.0-H-GREEN	52200120091D	50

RATINGS

	c UL us			VDE	
Usegroup	B	C	D		
Rated Voltage	600 V	-	600 V	1.000 V	
Rated Current	20 A	-	5 A	24 A	
Rated Wire Size				min	max
solid	AWG 30-12	-	AWG 30-12	0.5 mm²	2.5 mm²
stranded	AWG 30-12	-	AWG 30-12	0.5 mm²	2.5 mm²
Torque (in.lbs)	4.43	-	4.43	4.43	
Screw Size	M2.5	-	M2.5	M2.5	
Test Voltage	2.2 kV	-	2.2 kV	3.5 kV	

[1]Colours according to RAL, there may be variations on colour due to production conditions. Special colours on request.

Spacing 2.5 mm
1- to n-poles

AK4191/..KD-2.5-PEBBLE GREY

WIRE SIZES	
solid min	0.14 mm²
solid max	0.75 mm²
stranded min	0.14 mm²
stranded max	0.75 mm²
stranded with ferrule min	0.14 mm²
stranded with ferrule max	0.34 mm²
DIMENSIONS	
Stripped Length	9.0 mm
PCB Hole Diameter	1.2 mm
MATERIALS	
Contact Pin	Bronze
INSULATING MATERIAL	
Material	PA 6.6
Flammability Class	UL 94 V-0
TEMPERATURES	
Operating Temperature (without mech. load)	-40 °C - 105 °C
WAVE SOLDERING PROCESS	
Soldering Temperature, recommended	260 °C
Peak Soldering Time, recommended	3-4 s
REFLOW PROCESS	
Soldering Temperature, recommended	-
Peak Soldering Time, recommended	-



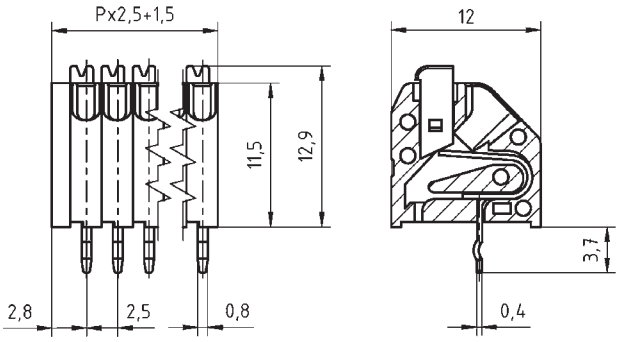

COLOURS[1]

PEBBLE GREY, RAL 7032		ORANGE, RAL 2011	
BLUE, RAL 5015		LIGHT GREEN, similar RAL 6018	

ORDER DATA (SPACING 2.5 MM)

Poles	Width (mm)	Article Designation	Article Number	PU
1	4.00	AK4191/1KD-2.5-PEBBLE GREY	54191010001G	250
2	6.50	AK4191/2KD-2.5-PEBBLE GREY	54191020001F	200
3	9.00	AK4191/3KD-2.5-PEBBLE GREY	54191030001F	200
4	11.50	AK4191/4KD-2.5-PEBBLE GREY	54191040001F	200
5	14.00	AK4191/5KD-2.5-PEBBLE GREY	54191050001E	100
6	16.50	AK4191/6KD-2.5-PEBBLE GREY	54191060001E	100
7	19.00	AK4191/7KD-2.5-PEBBLE GREY	54191070001E	100
8	21.50	AK4191/8KD-2.5-PEBBLE GREY	54191080001D	50
9	24.00	AK4191/9KD-2.5-PEBBLE GREY	54191090001D	50
10	26.50	AK4191/10KD-2.5-PEBBLE GREY	54191100001D	50
11	29.00	AK4191/11KD-2.5-PEBBLE GREY	54191110001D	50
12	31.50	AK4191/12KD-2.5-PEBBLE GREY	54191120001D	50

ACCESSORIES

	Description	Article Number
	Spacer SPC-AK4191-PEBBLE GREY	54191000000

RATINGS

	c UL us			VDE	
Usegroup	B	C	D		
Rated Voltage	150 V	-	150 V	130 V	
Rated Current	2 A	-	2 A	2 A	
Rated Wire Size				min	max
solid	AWG 26-20	-	AWG 26-20	0.2 mm²	0.75 mm²
stranded	AWG 26-20	-	AWG 26-20	0.2 mm²	0.75 mm²
Test Voltage	1.3 kV	-	1.3 kV	1.25 kV	

[1]Colours according to RAL, there may be variations on colour due to production conditions. Special colours on request.

L'IMPULSION
Retrouvez nous sur
www.limpulsion.fr

AK4191/..KDVP-2.5-PEBBLE GREY

Spacing 2.5 mm
1- to n-poles



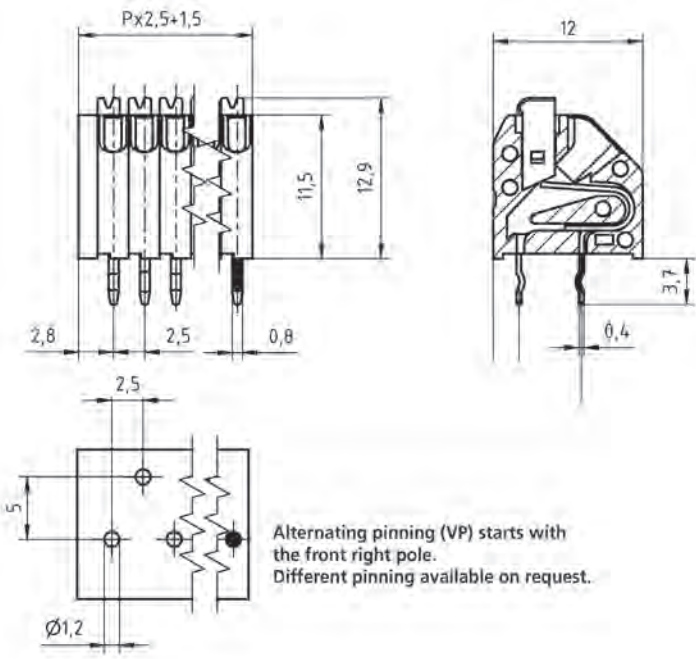

WIRE SIZES	
solid min	0.14 mm²
solid max	0.75 mm²
stranded min	0.14 mm²
stranded max	0.75 mm²
stranded with ferrule min	0.14 mm²
stranded with ferrule max	0.34 mm²
DIMENSIONS	
Stripped Length	9.0 mm
PCB Hole Diameter	1.2 mm
MATERIALS	
Contact Pin	Bronze
INSULATING MATERIAL	
Material	PA 6.6
Flammability Class	UL 94 V-0
TEMPERATURES	
Operating Temperature (without mech. load)	-40 °C - 105 °C
WAVE SOLDERING PROCESS	
Soldering Temperature, recommended	260 °C
Peak Soldering Time, recommended	3-4 s
REFLOW PROCESS	
Soldering Temperature, recommended	-
Peak Soldering Time, recommended	-

COLOURS[1]

PEBBLE GREY, RAL 7032	ORANGE, RAL 2011
BLUE, RAL 5015	LIGHT GREEN, similar RAL 6018

ACCESSORIES

	Description	Article Number
	Spacer SPC-AK4191-PEBBLE GREY	54191000000

ORDER DATA (SPACING 2.5 MM)

Poles	Width (mm)	Article Designation	Article Number	PU
1	4.00	AK4191/1KDVP-2.5-PEBBLE GREY	54191010051G	250
2	6.50	AK4191/2KDVP-2.5-PEBBLE GREY	54191020051F	200
3	9.00	AK4191/3KDVP-2.5-PEBBLE GREY	54191030051F	200
4	11.50	AK4191/4KDVP-2.5-PEBBLE GREY	54191040051F	200
5	14.00	AK4191/5KDVP-2.5-PEBBLE GREY	54191050051E	100
6	16.50	AK4191/6KDVP-2.5-PEBBLE GREY	54191060051E	100
7	19.00	AK4191/7KDVP-2.5-PEBBLE GREY	54191070051E	100
8	21.50	AK4191/8KDVP-2.5-PEBBLE GREY	54191080051D	50
9	24.00	AK4191/9KDVP-2.5-PEBBLE GREY	54191090051D	50
10	26.50	AK4191/10KDVP-2.5-PEBBLE GREY	54191100051D	50
11	29.00	AK4191/11KDVP-2.5-PEBBLE GREY	54191110051D	50
12	31.50	AK4191/12KDVP-2.5-PEBBLE GREY	54191120051D	50

RATINGS

		c UL us		VDE	
Usegroup	B	C	D		
Rated Voltage	300 V	-	300 V	250 V	
Rated Current	2 A	-	2 A	2 A	
Rated Wire Size				min	max
solid	AWG 26-20	-	AWG 26-20	0.2 mm²	0.75 mm²
stranded	AWG 26-20	-	AWG 26-20	0.2 mm²	0.75 mm²
Test Voltage	1.6 kV	-	1.6 kV	2.0 kV	

[1]Colours according to RAL, there may be variations on colour due to production conditions. Special colours on request.

Spacing 2.54 mm
1- to n-poles

AKZ4791/..KD-2.54-V-BASALTGREY

WIRE SIZES	
solid min	0.14 mm²
solid max	0.75 mm²
stranded min	0.14 mm²
stranded max	0.75 mm²
stranded with ferrule min	0.14 mm²
stranded with ferrule max	0.14 mm²
DIMENSIONS	
Stripped Length	10.0 mm
PCB Hole Diameter	1.2 mm
MATERIALS	
Solder Tab	Brass
Clamp Spring	Stainless Steel
INSULATING MATERIAL	
Material	PBT
Flammability Class	UL 94 V-0
TEMPERATURES	
Operating Temperature (without mech. load)	-40 °C - 105 °C
WAVE SOLDERING PROCESS	
Soldering Temperature, recommended	260 °C
Peak Soldering Time, recommended	3-4 s
REFLOW PROCESS	
Soldering Temperature, recommended	-
Peak Soldering Time, recommended	-



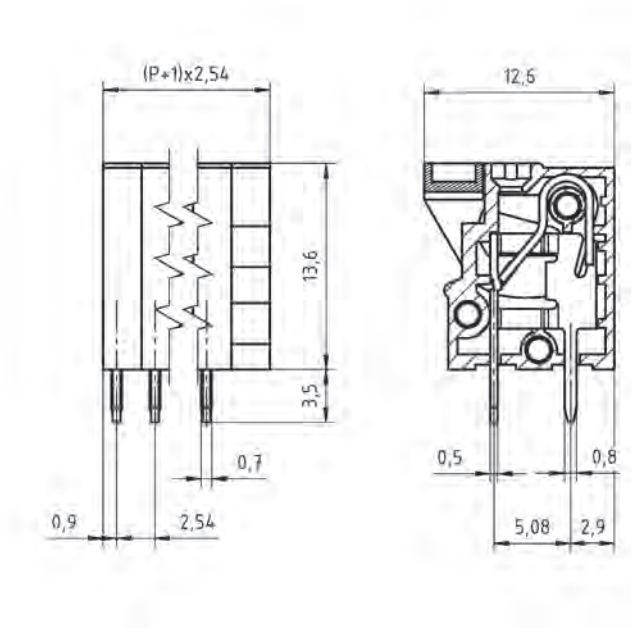

COLOURS[1]	
BASALT GREY, RAL 7012	GREEN, RAL 6018
LIGHT GREEN, similar RAL 6018	

ORDER DATA (SPACING 2.54 MM)

Poles	Width (mm)	Article Designation	Article Number	PU
1	5.08	AKZ4791/1KD-2.54-V-BASALTGREY	54791010421G	250
2	7.62	AKZ4791/2KD-2.54-V-BASALTGREY	54791020421F	200
3	10.16	AKZ4791/3KD-2.54-V-BASALTGREY	54791030421F	200
4	12.70	AKZ4791/4KD-2.54-V-BASALTGREY	54791040421F	200
5	15.24	AKZ4791/5KD-2.54-V-BASALTGREY	54791050421E	100
6	17.78	AKZ4791/6KD-2.54-V-BASALTGREY	54791060421E	100
7	20.32	AKZ4791/7KD-2.54-V-BASALTGREY	54791070421E	100
8	22.86	AKZ4791/8KD-2.54-V-BASALTGREY	54791080421D	50
9	25.40	AKZ4791/9KD-2.54-V-BASALTGREY	54791090421D	50
10	27.94	AKZ4791/10KD-2.54-V-BASALTGREY	54791100421D	50
11	30.48	AKZ4791/11KD-2.54-V-BASALTGREY	54791110421D	50
12	33.02	AKZ4791/12KD-2.54-V-BASALTGREY	54791120421D	50

RATINGS	c UL us			VDE	
Usegroup	B	C	D		
Rated Voltage	150 V	-	-	130 V	
Rated Current	6 A	-	-	9 A	
Rated Wire Size				min	max
solid	AWG 26-18	-	-	0.2 mm²	0.75 mm²
stranded	AWG 26-18	-	-	0.2 mm²	0.75 mm²
Test Voltage	1.3 kV	-	-	1.25 kV	

[1]Colours according to RAL, there may be variations on colour due to production conditions. Special colours on request.

L'IMPULSION
Retrouvez nous sur
www.limpulsion.fr

AKZ4791/..KD-2.54-H-BASALTGREY

Spacing 2.54 mm
1- to n-poles



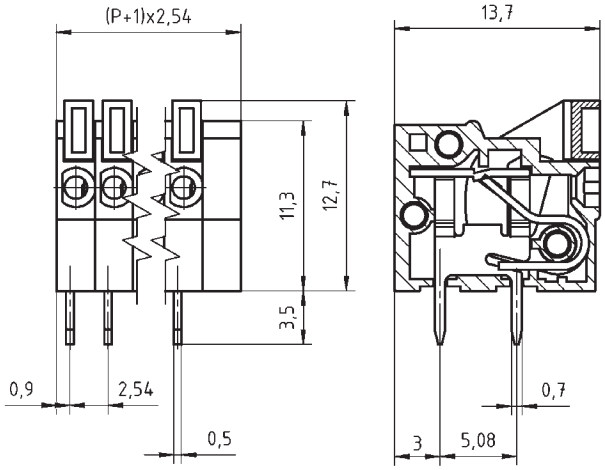

WIRE SIZES	
solid min	0.14 mm²
solid max	0.75 mm²
stranded min	0.14 mm²
stranded max	0.75 mm²
stranded with ferrule min	0.14 mm²
stranded with ferrule max	0.14 mm²
DIMENSIONS	
Stripped Length	10.0 mm
PCB Hole Diameter	1.2 mm
MATERIALS	
Solder Tab	Brass
Clamp Spring	Stainless Steel
INSULATING MATERIAL	
Material	PBT
Flammability Class	UL 94 V-0
TEMPERATURES	
Operating Temperature (without mech. load)	-40 °C - 105 °C
WAVE SOLDERING PROCESS	
Soldering Temperature, recommended	260 °C
Peak Soldering Time, recommended	3-4 s
REFLOW PROCESS	
Soldering Temperature, recommended	-
Peak Soldering Time, recommended	-

COLOURS[1]

BASALT GREY, RAL 7012	GREEN, RAL 6018
LIGHT GREEN, similar RAL 6018	

ORDER DATA (SPACING 2.54 MM)

Poles	Width (mm)	Article Designation	Article Number	PU
1	5.08	AKZ4791/1KD-2.54-H-BASALTGREY	54791010422G	250
2	7.62	AKZ4791/2KD-2.54-H-BASALTGREY	54791020422F	200
3	10.16	AKZ4791/3KD-2.54-H-BASALTGREY	54791030422F	200
4	12.70	AKZ4791/4KD-2.54-H-BASALTGREY	54791040422F	200
5	15.24	AKZ4791/5KD-2.54-H-BASALTGREY	54791050422E	100
6	17.78	AKZ4791/6KD-2.54-H-BASALTGREY	54791060422E	100
7	20.32	AKZ4791/7KD-2.54-H-BASALTGREY	54791070422E	100
8	22.86	AKZ4791/8KD-2.54-H-BASALTGREY	54791080422D	50
9	25.40	AKZ4791/9KD-2.54-H-BASALTGREY	54791090422D	50
10	27.94	AKZ4791/10KD-2.54-H-BASALTGREY	54791100422D	50
11	30.48	AKZ4791/11KD-2.54-H-BASALTGREY	54791110422D	50
12	33.02	AKZ4791/12KD-2.54-H-BASALTGREY	54791120422D	50

RATINGS	c UL us			VDE	
Usegroup	B	C	D		
Rated Voltage	150 V	-	-	130 V	
Rated Current	6 A	-	-	9 A	
Rated Wire Size				min	max
solid	AWG 26-18	-	-	0.2 mm²	0.75 mm²
stranded	AWG 26-18	-	-	0.2 mm²	0.75 mm²
Test Voltage	1.3 kV	-	-	1.25 kV	

[1]Colours according to RAL, there may be variations on colour due to production conditions. Special colours on request.

Spacing 3.5 mm
1- to n-poles

AK4291/..KD-3.5-PEBBLE GREY

WIRE SIZES	
solid min	0.08 mm²
solid max	1.5 mm²
stranded min	0.14 mm²
stranded max	1.0 mm²
stranded with ferrule min	0.14 mm²
stranded with ferrule max	0.5 mm²
DIMENSIONS	
Stripped Length	9.0 mm
PCB Hole Diameter	1.0 mm
MATERIALS	
Contact Tag	Copper Alloy
INSULATING MATERIAL	
Material	PA 6.6
Flammability Class	UL 94 V-0
TEMPERATURES	
Operating Temperature (without mech. load)	-40 °C - 105 °C
WAVE SOLDERING PROCESS	
Soldering Temperature, recommended	260 °C
Peak Soldering Time, recommended	3-4 s
REFLOW PROCESS	
Soldering Temperature, recommended	-
Peak Soldering Time, recommended	-



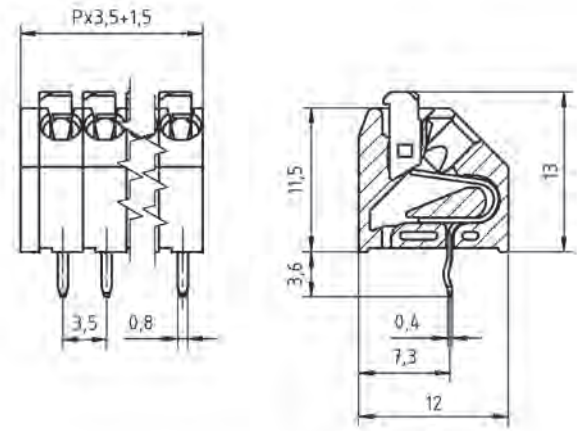

COLOURS[1]

	PEBBLE GREY, RAL 7032		ORANGE, RAL 2011
	BLUE, RAL 5015		LIGHT GREEN, similar RAL 6018

ORDER DATA (SPACING 3.5 MM)

Poles	Width (mm)	Article Designation	Article Number	PU
1	5.00	AK4291/1KD-3.5-PEBBLE GREY	54291010001G	250
2	8.50	AK4291/2KD-3.5-PEBBLE GREY	54291020001F	200
3	12.00	AK4291/3KD-3.5-PEBBLE GREY	54291030001F	200
4	15.50	AK4291/4KD-3.5-PEBBLE GREY	54291040001F	200
5	19.00	AK4291/5KD-3.5-PEBBLE GREY	54291050001E	100
6	22.50	AK4291/6KD-3.5-PEBBLE GREY	54291060001E	100
7	26.00	AK4291/7KD-3.5-PEBBLE GREY	54291070001E	100
8	29.50	AK4291/8KD-3.5-PEBBLE GREY	54291080001D	50
9	33.00	AK4291/9KD-3.5-PEBBLE GREY	54291090001D	50
10	36.50	AK4291/10KD-3.5-PEBBLE GREY	54291100001D	50
11	40.00	AK4291/11KD-3.5-PEBBLE GREY	54291110001D	50
12	43.50	AK4291/12KD-3.5-PEBBLE GREY	54291120001D	50

ACCESSORIES

	Description	Article Number
	Spacer SPC-AK4291-PEBBLE GREY	54291000000
	Bridge, 2-pole, insulated, BRI/2-7.0/7.62-L7.5-LIGHT GREY	50000000018
	Bridge, 2-pole, BR/2-3.5/3.81-L7.5	50000000015
	Bridge, 3-pole, BR/3-3.5/3.81-L7.5	50000000016

RATINGS

	cULus			VDE	
Usegroup	B	C	D		
Rated Voltage	300 V	-	-	130 V	
Rated Current	6 A	-	-	3 A	
Rated Wire Size				min	max
solid	AWG 22-16	-	-	0.2 mm²	0.75 mm²
stranded	-	-	-	-	-
Test Voltage	1.6 kV	-	-	2.0 kV	

[1]Colours according to RAL, there may be variations on colour due to production conditions. Special colours on request.

L'IMPULSION
Retrouvez nous sur
www.limpulsion.fr

AK4291/..KD/1-3.5-PEBBLE GREY

Spacing 3.5 mm
1- to n-poles



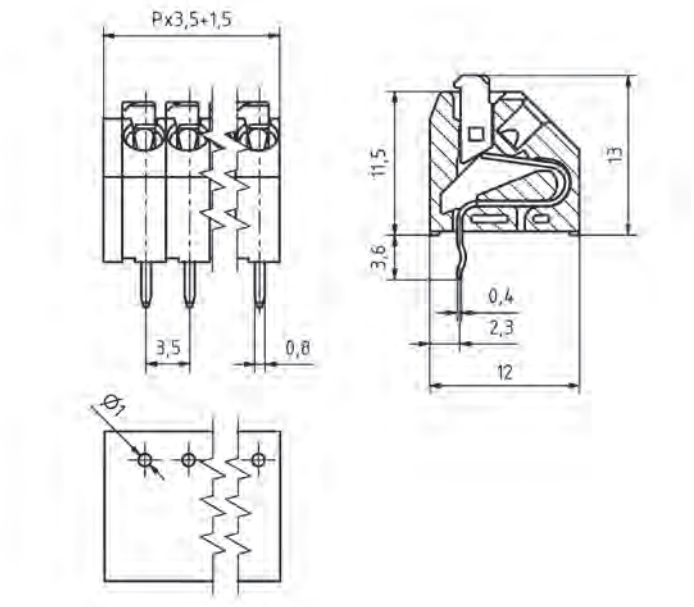

WIRE SIZES	
solid min	0.08 mm²
solid max	1.5 mm²
stranded min	0.14 mm²
stranded max	1.0 mm²
stranded with ferrule min	0.14 mm²
stranded with ferrule max	0.5 mm²
DIMENSIONS	
Stripped Length	9.0 mm
PCB Hole Diameter	1.0 mm
MATERIALS	
Contact Tag	Copper Alloy
INSULATING MATERIAL	
Material	PA 6.6
Flammability Class	UL 94 V-0
TEMPERATURES	
Operating Temperature (without mech. load)	-40 °C - 105 °C
WAVE SOLDERING PROCESS	
Soldering Temperature, recommended	260 °C
Peak Soldering Time, recommended	3-4 s
REFLOW PROCESS	
Soldering Temperature, recommended	-
Peak Soldering Time, recommended	-

COLOURS[1]

PEBBLE GREY, RAL 7032	ORANGE, RAL 2011
BLUE, RAL 5015	LIGHT GREEN, similar RAL 6018

ACCESSORIES

	Description	Article Number
	Spacer SPC-AK4291-PEBBLE GREY	54291000000
	Bridge, 2-pole, insulated, BRI/2-7.0/7.62-L7.5-LIGHT GREY	50000000018
	Bridge, 2-pole, BR/2-3.5/3.81-L7.5	50000000015
	Bridge, 3-pole, BR/3-3.5/3.81-L7.5	50000000016

ORDER DATA (SPACING 3.5 MM)

Poles	Width (mm)	Article Designation	Article Number	PU
1	5.00	AK4291/1KD/1-3.5-PEBBLE GREY	54291010021G	250
2	8.50	AK4291/2KD/1-3.5-PEBBLE GREY	54291020021F	200
3	12.00	AK4291/3KD/1-3.5-PEBBLE GREY	54291030021F	200
4	15.50	AK4291/4KD/1-3.5-PEBBLE GREY	54291040021F	200
5	19.00	AK4291/5KD/1-3.5-PEBBLE GREY	54291050021E	100
6	22.50	AK4291/6KD/1-3.5-PEBBLE GREY	54291060021E	100
7	26.00	AK4291/7KD/1-3.5-PEBBLE GREY	54291070021E	100
8	29.50	AK4291/8KD/1-3.5-PEBBLE GREY	54291080021D	50
9	33.00	AK4291/9KD/1-3.5-PEBBLE GREY	54291090021D	50
10	36.50	AK4291/10KD/1-3.5-PEBBLE GREY	54291100021D	50
11	40.00	AK4291/11KD/1-3.5-PEBBLE GREY	54291110021D	50
12	43.50	AK4291/12KD/1-3.5-PEBBLE GREY	54291120021D	50

RATINGS

		c UL us		VDE	
Usegroup	B	C	D		
Rated Voltage	300 V	-	-	130 V	
Rated Current	6 A	-	-	3 A	
Rated Wire Size				min	max
solid	AWG 22-16	-	-	0.2 mm²	0.75 mm²
stranded	-	-	-	-	-
Test Voltage	1.6 kV	-	-	2.0 kV	

[1]Colours according to RAL, there may be variations on colour due to production conditions. Special colours on request.

Spacing 3.5 mm
1- to n-poles

AK4291/..KDVP-3.5-PEBBLE GREY

WIRE SIZES	
solid min	0.08 mm²
solid max	1.5 mm²
stranded min	0.14 mm²
stranded max	1.0 mm²
stranded with ferrule min	0.14 mm²
stranded with ferrule max	0.5 mm²
DIMENSIONS	
Stripped Length	9.0 mm
PCB Hole Diameter	1.0 mm
MATERIALS	
Contact Tag	Copper Alloy
INSULATING MATERIAL	
Material	PA 6.6
Flammability Class	UL 94 V-0
TEMPERATURES	
Operating Temperature (without mech. load)	-40 °C - 105 °C
WAVE SOLDERING PROCESS	
Soldering Temperature, recommended	260 °C
Peak Soldering Time, recommended	3-4 s
REFLOW PROCESS	
Soldering Temperature, recommended	-
Peak Soldering Time, recommended	-



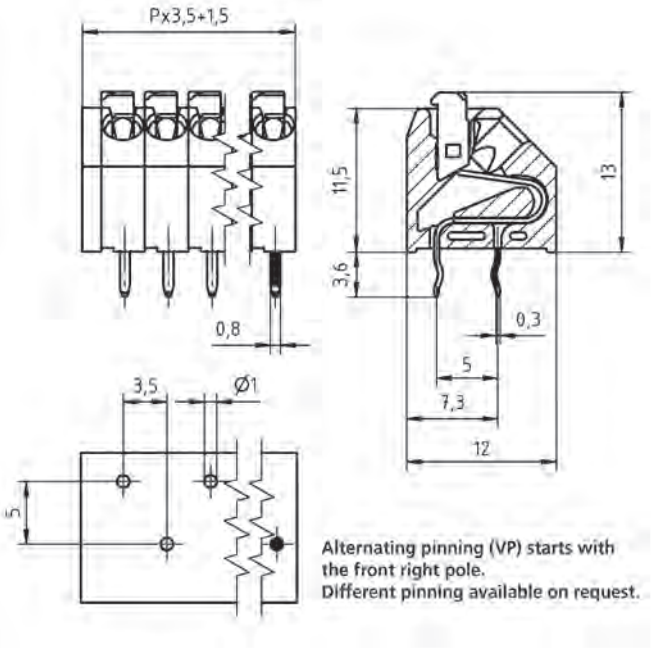

COLOURS[1]

	PEBBLE GREY, RAL 7032		ORANGE, RAL 2011
	BLUE, RAL 5015		LIGHT GREEN, similar RAL 6018

ORDER DATA (SPACING 3.5 MM)

Poles	Width (mm)	Article Designation	Article Number	PU
1	5.00	AK4291/1KDVP-3.5-PEBBLE GREY	54291010051G	250
2	8.50	AK4291/2KDVP-3.5-PEBBLE GREY	54291020051F	200
3	12.00	AK4291/3KDVP-3.5-PEBBLE GREY	54291030051F	200
4	15.50	AK4291/4KDVP-3.5-PEBBLE GREY	54291040051F	200
5	19.00	AK4291/5KDVP-3.5-PEBBLE GREY	54291050051E	100
6	22.50	AK4291/6KDVP-3.5-PEBBLE GREY	54291060051E	100
7	26.00	AK4291/7KDVP-3.5-PEBBLE GREY	54291070051E	100
8	29.50	AK4291/8KDVP-3.5-PEBBLE GREY	54291080051D	50
9	33.00	AK4291/9KDVP-3.5-PEBBLE GREY	54291090051D	50
10	36.50	AK4291/10KDVP-3.5-PEBBLE GREY	54291100051D	50
11	40.00	AK4291/11KDVP-3.5-PEBBLE GREY	54291110051D	50
12	43.50	AK4291/12KDVP-3.5-PEBBLE GREY	54291120051D	50

ACCESSORIES

	Description	Article Number
	Spacer SPC-AK4291-PEBBLE GREY	54291000000
	Bridge, 2-pole, insulated, BRI/2-7.0/7.62-L7.5-LIGHT GREY	50000000018
	Bridge, 2-pole, BR/2-3.5/3.81-L7.5	50000000015
	Bridge, 3-pole, BR/3-3.5/3.81-L7.5	50000000016

RATINGS

	c UL us			VDE	
Usegroup	B	C	D		
Rated Voltage	300 V	-	300 V	250 V	
Rated Current	6 A	-	6 A	3 A	
Rated Wire Size				min	max
solid	AWG 22-16	-	AWG 22-16	0.2 mm²	0.75 mm²
stranded	-	-	-	-	-
Test Voltage	1.6 kV	-	1.6 kV	2.0 kV	

[1]Colours according to RAL, there may be variations on colour due to production conditions. Special colours on request.

L'IMPULSION
Retrouvez nous sur
www.limpulsion.fr

AK4291/..KDVP/1-3.5-PEBBLE GREY

Spacing 3.5 mm
2- to n-poles



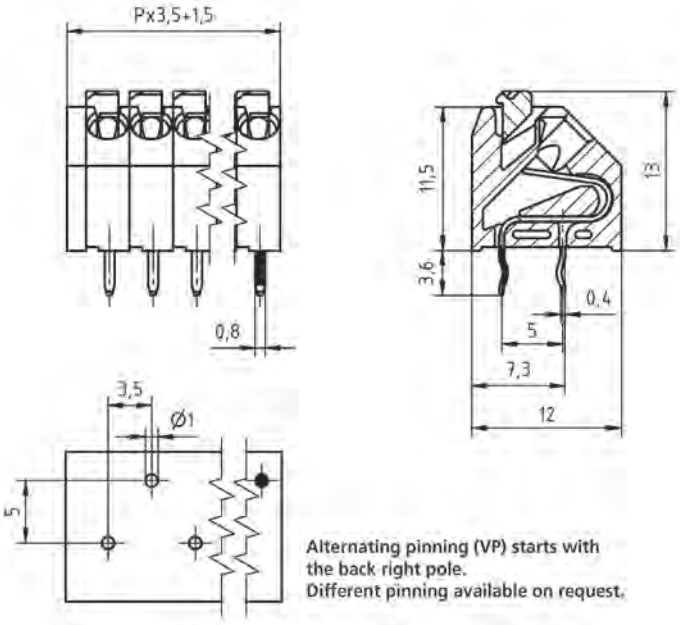

Alternating pinning (VP) starts with the back right pole.
Different pinning available on request.

WIRE SIZES	
solid min	0.08 mm²
solid max	1.5 mm²
stranded min	0.14 mm²
stranded max	1.0 mm²
stranded with ferrule min	0.14 mm²
stranded with ferrule max	0.5 mm²
DIMENSIONS	
Stripped Length	9.0 mm
PCB Hole Diameter	1.0 mm
MATERIALS	
Contact Tag	Copper Alloy
INSULATING MATERIAL	
Material	PA 6.6
Flammability Class	UL 94 V-0
TEMPERATURES	
Operating Temperature (without mech. load)	-40 °C - 105 °C
WAVE SOLDERING PROCESS	
Soldering Temperature, recommended	260 °C
Peak Soldering Time, recommended	3-4 s
REFLOW PROCESS	
Soldering Temperature, recommended	-
Peak Soldering Time, recommended	-

COLOURS[1]			
	PEBBLE GREY, RAL 7032		ORANGE, RAL 2011
	BLUE, RAL 5015		LIGHT GREEN, similar RAL 6018

ACCESSORIES

	Description	Article Number
	Spacer SPC-AK4291-PEBBLE GREY	54291000000
	Bridge, 2-pole, insulated, BRI/2-7.0/7.62-L7.5-LIGHT GREY	50000000018
	Bridge, 2-pole, BR/2-3.5/3.81-L7.5	50000000015
	Bridge, 3-pole, BR/3-3.5/3.81-L7.5	50000000016

ORDER DATA (SPACING 3.5 MM)

Poles	Width (mm)	Article Designation	Article Number	PU
2	8.50	AK4291/2KDVP/1-3.5-PEBBLE GREY	54291020061F	200
3	12.00	AK4291/3KDVP/1-3.5-PEBBLE GREY	54291030061F	200
4	15.50	AK4291/4KDVP/1-3.5-PEBBLE GREY	54291040061F	200
5	19.00	AK4291/5KDVP/1-3.5-PEBBLE GREY	54291050061E	100
6	22.50	AK4291/6KDVP/1-3.5-PEBBLE GREY	54291060061E	100
7	26.00	AK4291/7KDVP/1-3.5-PEBBLE GREY	54291070061E	100
8	29.50	AK4291/8KDVP/1-3.5-PEBBLE GREY	54291080061D	50
9	33.00	AK4291/9KDVP/1-3.5-PEBBLE GREY	54291090061D	50
10	36.50	AK4291/10KDVP/1-3.5-PEBBLE GREY	54291100061D	50
11	40.00	AK4291/11KDVP/1-3.5-PEBBLE GREY	54291110061D	50
12	43.50	AK4291/12KDVP/1-3.5-PEBBLE GREY	54291120061D	50

RATINGS

	c UL us			VDE	
Usegroup	B	C	D		
Rated Voltage	300 V	-	300 V	250 V	
Rated Current	6 A	-	6 A	3 A	
Rated Wire Size				min	max
solid	AWG 22-16	-	AWG 22-16	0.2 mm²	0.75 mm²
stranded	-	-	-	-	-
Test Voltage	1.6 kV	-	1.6 kV	2.0 kV	

[1]Colours according to RAL, there may be variations on colour due to production conditions. Special colours on request.

Spacing 3.5 mm
Pin length 1.5 mm also available

AK4601/..KD-3.5-V-P3.3-BK-HT

NEU



WIRE SIZES	
solid min	0.2 mm²
solid max	1.5 mm²
stranded min	0.2 mm²
stranded max	1.5 mm²
stranded with ferrule min	0.25 mm²
stranded with ferrule max	0.75 mm²
DIMENSIONS	
Stripped Length	10.0 mm
PCB Hole Diameter	1.2 mm
MATERIALS	
Solder Tab	Copper Alloy
Clamp Spring	Stainless Steel
INSULATING MATERIAL	
Material	PA
Flammability Class	UL 94 V-0
TEMPERATURES	
Operating Temperature (without mech. load)	-40 °C - 105 °C
WAVE SOLDERING PROCESS	
Soldering Temperature, recommended	260 °C
Peak Soldering Time, recommended	3-4 s
REFLOW PROCESS	
Soldering Temperature, recommended	217 °C - 245 °C
Peak Soldering Time, recommended	60 s

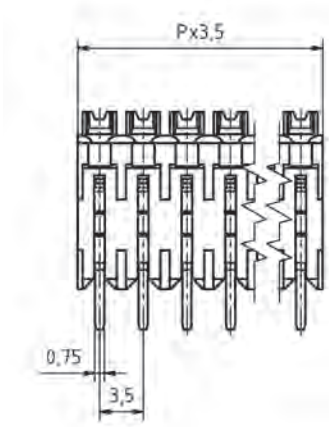

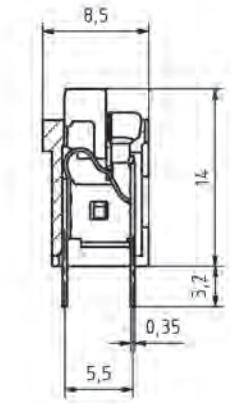

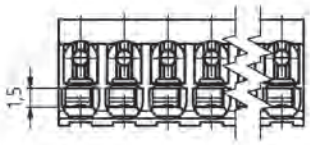

COLOURS[1]

BLACK, RAL 9011

ORDER DATA (SPACING 3.5 MM)

Poles	Width (mm)	Article Designation	Article Number	PU
2	7.00	AK4601/2KD-3.5-V-P3.3-BK-HT	54601020301G	250
3	10.50	AK4601/3KD-3.5-V-P3.3-BK-HT	54601030301F	200
4	14.00	AK4601/4KD-3.5-V-P3.3-BK-HT	54601040301F	200
5	17.50	AK4601/5KD-3.5-V-P3.3-BK-HT	54601050301F	200
6	21.00	AK4601/6KD-3.5-V-P3.3-BK-HT	54601060301E	100
7	24.50	AK4601/7KD-3.5-V-P3.3-BK-HT	54601070301E	100
8	28.00	AK4601/8KD-3.5-V-P3.3-BK-HT	54601080301E	100
9	31.50	AK4601/9KD-3.5-V-P3.3-BK-HT	54601090301D	50
10	35.00	AK4601/10KD-3.5-V-P3.3-BK-HT	54601100301D	50
11	38.50	AK4601/11KD-3.5-V-P3.3-BK-HT	54601110301D	50
12	42.00	AK4601/12KD-3.5-V-P3.3-BK-HT	54601120301D	50

RATINGS		
Usegroup	B	D
Rated Voltage	300 V	300 V
Rated Current	10 A	10 A
Rated Wire Size		
solid	AWG 24-16	AWG 24-16
stranded	AWG 24-16	AWG 24-16
Test Voltage	1.6 kV	1.6 kV

*Approval Pending

RATINGS						
Overvoltage Category	III		III		III	
Pollution Degree	1		2		3	
Rated Voltage	630 V		320 V		250 V	
Rated Current	8 A		8 A		8 A	
Rated Wire Size	min	max	min	max	min	max
solid (mm²)	0.2	1.5	0.2	1.5	0.2	1.5
stranded (mm²)	0.2	1.5	0.2	1.5	0.2	1.5
Test Voltage	4.0 kV		4.0 kV		4.0 kV	

*Approval Pending

[1]Colours according to RAL, there may be variations on colour due to production conditions.

L'IMPULSION Retrouvez nous sur www.limpulsion.fr

NEW

AK4601/..KD-3.5-V-P3.3-BK-HT

Spacing 3.5 mm
Pin length 1.5 mm also available



Technical drawing see page 117

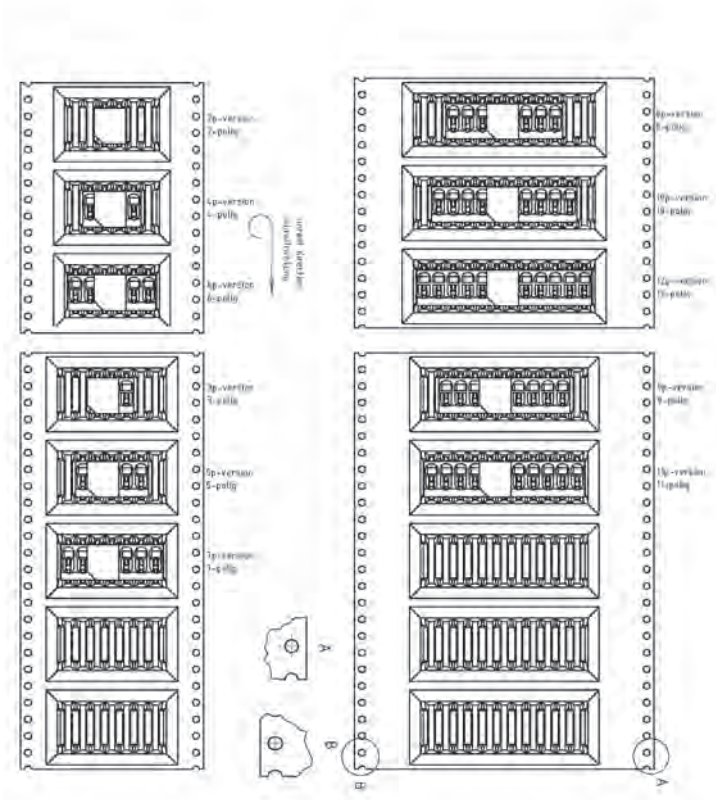

WIRE SIZES	
solid min	0.2 mm²
solid max	1.5 mm²
stranded min	0.2 mm²
stranded max	1.5 mm²
stranded with ferrule min	0.25 mm²
stranded with ferrule max	0.75 mm²
DIMENSIONS	
Stripped Length	10.0 mm
PCB Hole Diameter	1.2 mm
MATERIALS	
Solder Tab	Copper Alloy
Clamp Spring	Stainless Steel
INSULATING MATERIAL	
Material	PA
Flammability Class	UL 94 V-0
TEMPERATURES	
Operating Temperature (without mech. load)	-40 °C - 105 °C
WAVE SOLDERING PROCESS	
Soldering Temperature, recommended	260 °C
Peak Soldering Time, recommended	3-4 s
REFLOW PROCESS	
Soldering Temperature, recommended	217 °C - 245 °C
Peak Soldering Time, recommended	60 s

COLOURS[1]
BLACK, RAL 9011

TAPE-ON-REEL

Poles	Reel (RD/")	Width (R/mm)	Pitch (RP/mm)	Pieces (PCS)
2-7	13	44	20	150
8-12	13	72	20	150

ORDER DATA (SPACING 3.5 MM)

Poles	Width (mm)	Article Designation	Article Number	PU
2	7.00	AK4601/2KD-3.5-V-P3.3-BK-HT	54601020301R	150
3	10.50	AK4601/3KD-3.5-V-P3.3-BK-HT	54601030301R	150
4	14.00	AK4601/4KD-3.5-V-P3.3-BK-HT	54601040301R	150
5	17.50	AK4601/5KD-3.5-V-P3.3-BK-HT	54601050301R	150
6	21.00	AK4601/6KD-3.5-V-P3.3-BK-HT	54601060301R	150
7	24.50	AK4601/7KD-3.5-V-P3.3-BK-HT	54601070301R	150
8	28.00	AK4601/8KD-3.5-V-P3.3-BK-HT	54601080301R	150
9	31.50	AK4601/9KD-3.5-V-P3.3-BK-HT	54601090301R	150
10	35.00	AK4601/10KD-3.5-V-P3.3-BK-HT	54601100301R	150
11	38.50	AK4601/11KD-3.5-V-P3.3-BK-HT	54601110301R	150
12	42.00	AK4601/12KD-3.5-V-P3.3-BK-HT	54601120301R	150

RATINGS	c UL us*	
Usegroup	B	D
Rated Voltage	300 V	300 V
Rated Current	10 A	10 A
Rated Wire Size		
solid	AWG 24-16	AWG 24-16
stranded	AWG 24-16	AWG 24-16
Test Voltage	1.6 kV	1.6 kV

*Approval Pending

RATINGS						
Overvoltage Category	III		III		III	
Pollution Degree	1		2		3	
Rated Voltage	630 V		320 V		250 V	
Rated Current	8 A		8 A		8 A	
Rated Wire Size	min	max	min	max	min	max
solid (mm²)	0.2	1.5	0.2	1.5	0.2	1.5
stranded (mm²)	0.2	1.5	0.2	1.5	0.2	1.5
Test Voltage	4.0 kV		4.0 kV		4.0 kV	

*Approval Pending

[1]Colours according to RAL, there may be variations on colour due to production conditions.

Spacing 3.5 mm
Pin length 1.5 mm also available

AK4601/..KDVP-3.5-V-P3.3-BK-HT

NEW



WIRE SIZES	
solid min	0.2 mm²
solid max	1.5 mm²
stranded min	0.2 mm²
stranded max	1.5 mm²
stranded with ferrule min	0.25 mm²
stranded with ferrule max	0.75 mm²
DIMENSIONS	
Stripped Length	10.0 mm
PCB Hole Diameter	1.2 mm
MATERIALS	
Solder Tab	Copper Alloy
Clamp Spring	Stainless Steel
INSULATING MATERIAL	
Material	PA
Flammability Class	UL 94 V-0
TEMPERATURES	
Operating Temperature (without mech. load)	-40 °C - 105 °C
WAVE SOLDERING PROCESS	
Soldering Temperature, recommended	260 °C
Peak Soldering Time, recommended	3-4 s
REFLOW PROCESS	
Soldering Temperature, recommended	217 °C - 245 °C
Peak Soldering Time, recommended	60 s

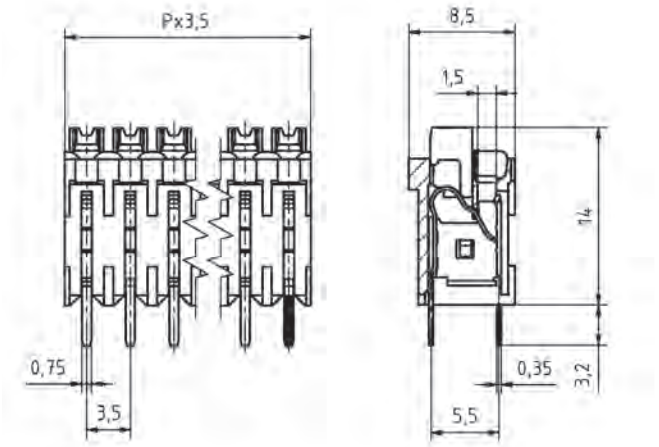

COLOURS[1]
BLACK, RAL 9011

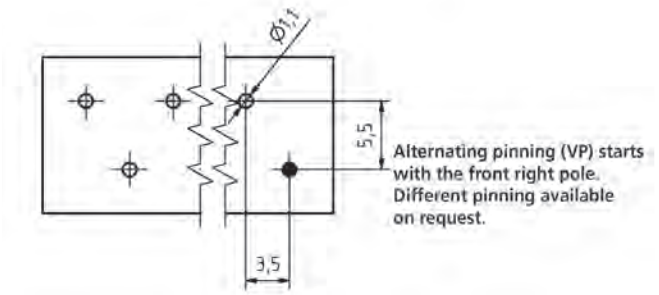

ORDER DATA (SPACING 3.5 MM)

Poles	Width (mm)	Article Designation	Article Number	PU
2	7.00	AK4601/2KDVP-3.5-V-P3.3-BK-HT	54601020351G	250
3	10.50	AK4601/3KDVP-3.5-V-P3.3-BK-HT	54601030351F	200
4	14.00	AK4601/4KDVP-3.5-V-P3.3-BK-HT	54601040351F	200
5	17.50	AK4601/5KDVP-3.5-V-P3.3-BK-HT	54601050351F	200
6	21.00	AK4601/6KDVP-3.5-V-P3.3-BK-HT	54601060351E	100
7	24.50	AK4601/7KDVP-3.5-V-P3.3-BK-HT	54601070351E	100
8	28.00	AK4601/8KDVP-3.5-V-P3.3-BK-HT	54601080351E	100
9	31.50	AK4601/9KDVP-3.5-V-P3.3-BK-HT	54601090351D	50
10	35.00	AK4601/10KDVP-3.5-V-P3.3-BK-HT	54601100351D	50
11	38.50	AK4601/11KDVP-3.5-V-P3.3-BK-HT	54601110351D	50
12	42.00	AK4601/12KDVP-3.5-V-P3.3-BK-HT	54601120351D	50

RATINGS		
Usegroup	B	D
Rated Voltage	300 V	300 V
Rated Current	10 A	10 A
Rated Wire Size		
solid	AWG 24-16	AWG 24-16
stranded	AWG 24-16	AWG 24-16
Test Voltage	1.6 kV	1.6 kV

*Approval Pending

RATINGS						
Overvoltage Category	III		III		III	
Pollution Degree	1		2		3	
Rated Voltage	630 V		320 V		250 V	
Rated Current	8 A		8 A		8 A	
Rated Wire Size	min	max	min	max	min	max
solid (mm²)	0.2	1.5	0.2	1.5	0.2	1.5
stranded (mm²)	0.2	1.5	0.2	1.5	0.2	1.5
Test Voltage	4.0 kV		4.0 kV		4.0 kV	

*Approval Pending

[1]Colours according to RAL, there may be variations on colour due to production conditions.

L'IMPULSION
Retrouvez nous sur
www.limpulsion.fr

NEW

AK4601/..KDVP-3.5-V-P3.3-BK-HT

Spacing 3.5 mm
Pin length 1.5 mm also available



Technical drawing see page 119

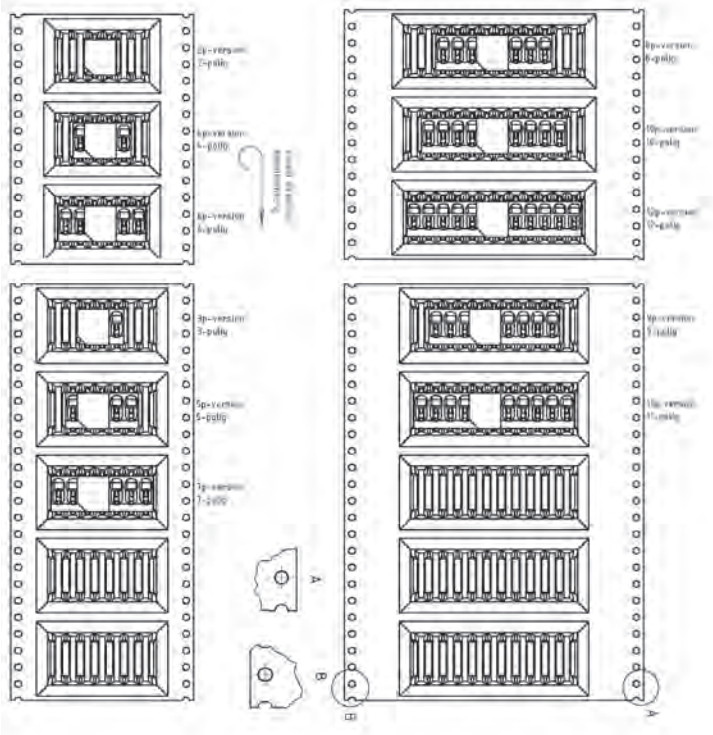

WIRE SIZES	
solid min	0.2 mm²
solid max	1.5 mm²
stranded min	0.2 mm²
stranded max	1.5 mm²
stranded with ferrule min	0.25 mm²
stranded with ferrule max	0.75 mm²
DIMENSIONS	
Stripped Length	10.0 mm
PCB Hole Diameter	1.2 mm
MATERIALS	
Solder Tab	Copper Alloy
Clamp Spring	Stainless Steel
INSULATING MATERIAL	
Material	PA
Flammability Class	UL 94 V-0
TEMPERATURES	
Operating Temperature (without mech. load)	-40 °C - 105 °C
WAVE SOLDERING PROCESS	
Soldering Temperature, recommended	260 °C
Peak Soldering Time, recommended	3-4 s
REFLOW PROCESS	
Soldering Temperature, recommended	217 °C - 245 °C
Peak Soldering Time, recommended	60 s

COLOURS[1]
BLACK, RAL 9011

TAPE-ON-REEL

Poles	Reel (RD/")	Width (R/mm)	Pitch (RP/mm)	Pieces (PCS)
2-7	13	44	20	150
8-12	13	72	20	150

ORDER DATA (SPACING 3.5 MM)

Poles	Width (mm)	Article Designation	Article Number	PU
2	7.00	AK4601/2KDVP-3.5-V-P3.3-BK-HT	54601020351R	150
3	10.50	AK4601/3KDVP-3.5-V-P3.3-BK-HT	54601030351R	150
4	14.00	AK4601/4KDVP-3.5-V-P3.3-BK-HT	54601040351R	150
5	17.50	AK4601/5KDVP-3.5-V-P3.3-BK-HT	54601050351R	150
6	21.00	AK4601/6KDVP-3.5-V-P3.3-BK-HT	54601060351R	150
7	24.50	AK4601/7KDVP-3.5-V-P3.3-BK-HT	54601070351R	150
8	28.00	AK4601/8KDVP-3.5-V-P3.3-BK-HT	54601080351R	150
9	31.50	AK4601/9KDVP-3.5-V-P3.3-BK-HT	54601090351R	150
10	35.00	AK4601/10KDVP-3.5-V-P3.3-BK-HT	54601100351R	150
11	38.50	AK4601/11KDVP-3.5-V-P3.3-BK-HT	54601110351R	150
12	42.00	AK4601/12KDVP-3.5-V-P3.3-BK-HT	54601120351R	150

RATINGS	c UL us	
Usegroup	B	D
Rated Voltage	300 V	300 V
Rated Current	10 A	10 A
Rated Wire Size		
solid	AWG 24-16	AWG 24-16
stranded	AWG 24-16	AWG 24-16
Test Voltage	1.6 kV	1.6 kV

*Approval Pending

RATINGS						
Overvoltage Category	III		III		III	
Pollution Degree	1		2		3	
Rated Voltage	630 V		320 V		250 V	
Rated Current	8 A		8 A		8 A	
Rated Wire Size	min	max	min	max	min	max
solid (mm²)	0.2	1.5	0.2	1.5	0.2	1.5
stranded (mm²)	0.2	1.5	0.2	1.5	0.2	1.5
Test Voltage	4.0 kV		4.0 kV		4.0 kV	

*Approval Pending

[1]Colours according to RAL, there may be variations on colour due to production conditions.

Spacing 3.5 mm

AK4601/..KD-3.5-V-BK-SMD

NEW



WIRE SIZES	
solid min	0.2 mm²
solid max	1.5 mm²
stranded min	0.2 mm²
stranded max	1.5 mm²
stranded with ferrule min	0.25 mm²
stranded with ferrule max	0.75 mm²
DIMENSIONS	
Stripped Length	10.0 mm
PCB Hole Diameter	1.2 mm
MATERIALS	
Solder Tab	Copper Alloy
Clamp Spring	Stainless Steel
INSULATING MATERIAL	
Material	PA
Flammability Class	UL 94 V-0
TEMPERATURES	
Operating Temperature (without mech. load)	-40 °C - 105 °C
WAVE SOLDERING PROCESS	
Soldering Temperature, recommended	260 °C
Peak Soldering Time, recommended	3-4 s
REFLOW PROCESS	
Soldering Temperature, recommended	217 °C - 245 °C
Peak Soldering Time, recommended	60 s

Tape-on-Reel drawing see page 120

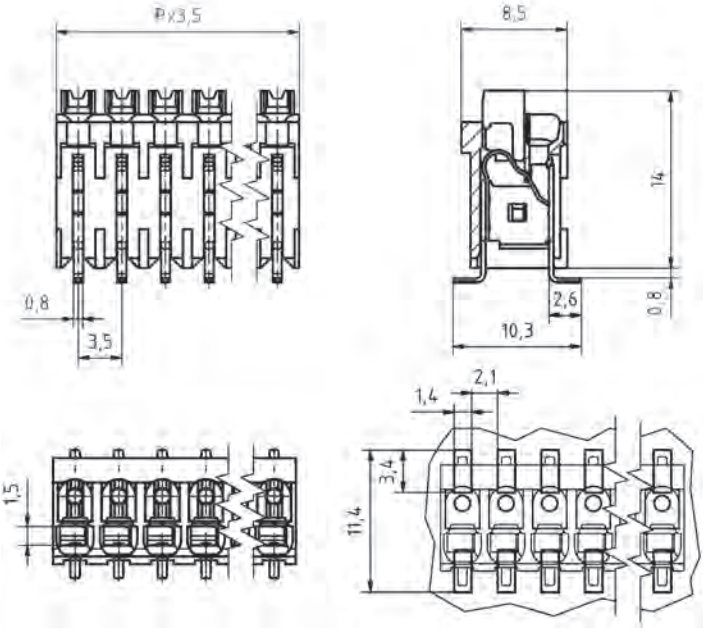

COLOURS[1]

BLACK, RAL 9011

TAPE-ON-REEL

Poles	Reel (RD/")	Width (R/mm)	Pitch (RP/mm)	Pieces (PCS)
2-7	13	44	20	150
8-12	13	72	20	150

ORDER DATA (SPACING 3.5 MM)

Poles	Width (mm)	Article Designation	Article Number	PU
2	7.00	AK4601/2KD-3.5-V-BK-SMD	54601029301R	150
3	10.50	AK4601/3KD-3.5-V-BK-SMD	54601039301R	150
4	14.00	AK4601/4KD-3.5-V-BK-SMD	54601049301R	150
5	17.50	AK4601/5KD-3.5-V-BK-SMD	54601059301R	150
6	21.00	AK4601/6KD-3.5-V-BK-SMD	54601069301R	150
7	24.50	AK4601/7KD-3.5-V-BK-SMD	54601079301R	150
8	28.00	AK4601/8KD-3.5-V-BK-SMD	54601089301R	150
9	31.50	AK4601/9KD-3.5-V-BK-SMD	54601099301R	150
10	35.00	AK4601/10KD-3.5-V-BK-SMD	54601109301R	150
11	38.50	AK4601/11KD-3.5-V-BK-SMD	54601119301R	150
12	42.00	AK4601/12KD-3.5-V-BK-SMD	54601129301R	150

RATINGS		
Usegroup	B	D
Rated Voltage	300 V	300 V
Rated Current	10 A	10 A
Rated Wire Size		
solid	AWG 24-16	AWG 24-16
stranded	AWG 24-16	AWG 24-16
Test Voltage	1.6 kV	1.6 kV

*Approval Pending

RATINGS						
Overvoltage Category	III		III		III	
Pollution Degree	1		2		3	
Rated Voltage	630 V		320 V		250 V	
Rated Current	8 A		8 A		8 A	
Rated Wire Size	min	max	min	max	min	max
solid (mm²)	0.2	1.5	0.2	1.5	0.2	1.5
stranded (mm²)	0.2	1.5	0.2	1.5	0.2	1.5
Test Voltage	4.0 kV		4.0 kV		4.0 kV	

*Approval Pending

[1]Colours according to RAL, there may be variations on colour due to production conditions.

L'IMPULSION
Retrouvez nous sur
www.limpulsion.fr

NEW

AK4601/..KD-3.5-H-P3.3-BK-HT

Spacing 3.5 mm
Pin length 1.5 mm also available



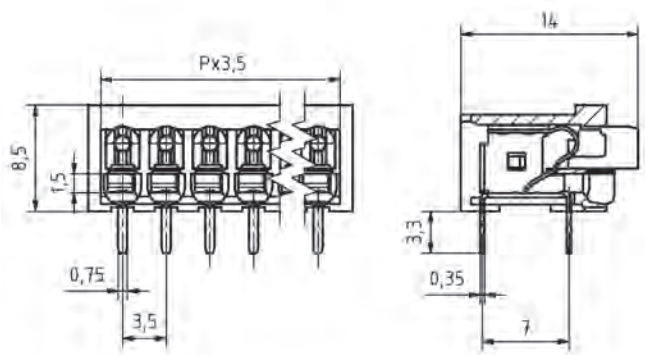

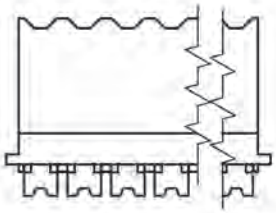

WIRE SIZES	
solid min	0.2 mm²
solid max	1.5 mm²
stranded min	0.2 mm²
stranded max	1.5 mm²
stranded with ferrule min	0.25 mm²
stranded with ferrule max	0.75 mm²
DIMENSIONS	
Stripped Length	10.0 mm
PCB Hole Diameter	1.2 mm
MATERIALS	
Solder Tab	Copper Alloy
Clamp Spring	Stainless Steel
INSULATING MATERIAL	
Material	PA
Flammability Class	UL 94 V-0
TEMPERATURES	
Operating Temperature (without mech. load)	-40 °C - 105 °C
WAVE SOLDERING PROCESS	
Soldering Temperature, recommended	260 °C
Peak Soldering Time, recommended	3-4 s
REFLOW PROCESS	
Soldering Temperature, recommended	217 °C - 245 °C
Peak Soldering Time, recommended	60 s

COLOURS[1]

BLACK, RAL 9011

ORDER DATA (SPACING 3.5 MM)

Poles	Width (mm)	Article Designation	Article Number	PU
2	7.00	AK4601/2KD-3.5-H-P3.3-BK-HT	54601020302G	250
3	10.50	AK4601/3KD-3.5-H-P3.3-BK-HT	54601030302F	200
4	14.00	AK4601/4KD-3.5-H-P3.3-BK-HT	54601040302F	200
5	17.50	AK4601/5KD-3.5-H-P3.3-BK-HT	54601050302F	200
6	21.00	AK4601/6KD-3.5-H-P3.3-BK-HT	54601060302E	100
7	24.50	AK4601/7KD-3.5-H-P3.3-BK-HT	54601070302E	100
8	28.00	AK4601/8KD-3.5-H-P3.3-BK-HT	54601080302E	100
9	31.50	AK4601/9KD-3.5-H-P3.3-BK-HT	54601090302D	50
10	35.00	AK4601/10KD-3.5-H-P3.3-BK-HT	54601100302D	50
11	38.50	AK4601/11KD-3.5-H-P3.3-BK-HT	54601110302D	50
12	42.00	AK4601/12KD-3.5-H-P3.3-BK-HT	54601120302D	50

RATINGS	c UL us*	
Usegroup	B	D
Rated Voltage	300 V	300 V
Rated Current	10 A	10 A
Rated Wire Size		
solid	AWG 24-16	AWG 24-16
stranded	AWG 24-16	AWG 24-16
Test Voltage	1.6 kV	1.6 kV

*Approval Pending

RATINGS						
Overvoltage Category	III		III		III	
Pollution Degree	1		2		3	
Rated Voltage	630 V		320 V		250 V	
Rated Current	8 A		8 A		8 A	
Rated Wire Size	min	max	min	max	min	max
solid (mm²)	0.2	1.5	0.2	1.5	0.2	1.5
stranded (mm²)	0.2	1.5	0.2	1.5	0.2	1.5
Test Voltage	4.0 kV		4.0 kV		4.0 kV	

*Approval Pending

[1]Colours according to RAL, there may be variations on colour due to production conditions.

Spacing 3.5 mm
Pin length 1.5 mm also available

AK4601/..KD-3.5-H-P3.3-BK-HT

NEW

WIRE SIZES	
solid min	0.2 mm²
solid max	1.5 mm²
stranded min	0.2 mm²
stranded max	1.5 mm²
stranded with ferrule min	0.25 mm²
stranded with ferrule max	0.75 mm²
DIMENSIONS	
Stripped Length	10.0 mm
PCB Hole Diameter	1.2 mm
MATERIALS	
Solder Tab	Copper Alloy
Clamp Spring	Stainless Steel
INSULATING MATERIAL	
Material	PA
Flammability Class	UL 94 V-0
TEMPERATURES	
Operating Temperature (without mech. load)	-40 °C - 105 °C
WAVE SOLDERING PROCESS	
Soldering Temperature, recommended	260 °C
Peak Soldering Time, recommended	3-4 s
REFLOW PROCESS	
Soldering Temperature, recommended	217 °C - 245 °C
Peak Soldering Time, recommended	60 s



Technical drawing see page 122

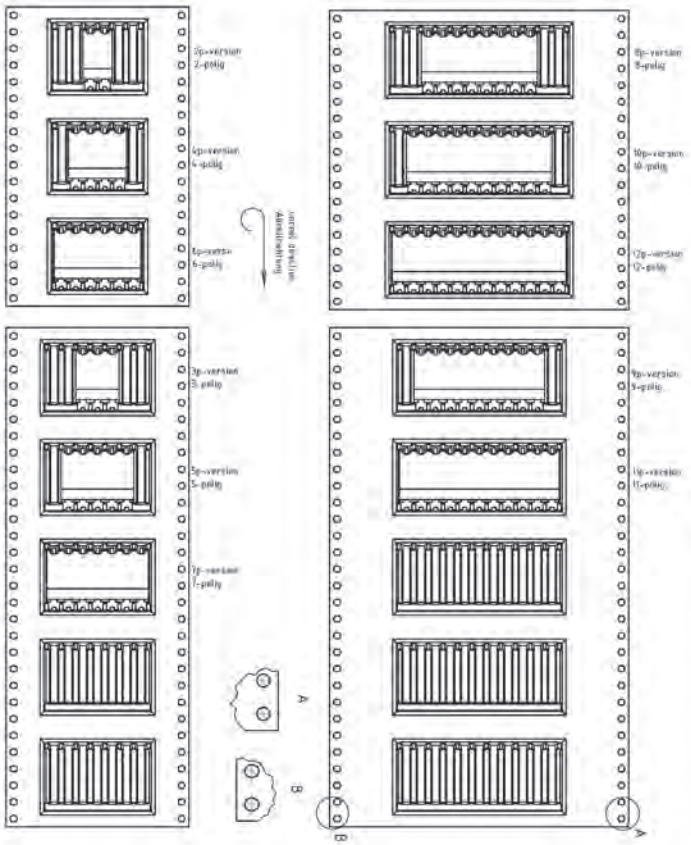

COLOURS[1]

BLACK, RAL 9011

TAPE-ON-REEL

Poles	Reel (RD/")	Width (R/mm)	Pitch (RP/mm)	Pieces (PCS)
2-6	13	44	24	200
7-12	13	72	24	200

ORDER DATA (SPACING 3.5 MM)

Poles	Width (mm)	Article Designation	Article Number	PU
2	7.00	AK4601/2KD-3.5-H-P3.3-BK-HT	54601020302R	200
3	10.50	AK4601/3KD-3.5-H-P3.3-BK-HT	54601030302R	200
4	14.00	AK4601/4KD-3.5-H-P3.3-BK-HT	54601040302R	200
5	17.50	AK4601/5KD-3.5-H-P3.3-BK-HT	54601050302R	200
6	21.00	AK4601/6KD-3.5-H-P3.3-BK-HT	54601060302R	200
7	24.50	AK4601/7KD-3.5-H-P3.3-BK-HT	54601070302R	200
8	28.00	AK4601/8KD-3.5-H-P3.3-BK-HT	54601080302R	200
9	31.50	AK4601/9KD-3.5-H-P3.3-BK-HT	54601090302R	200
10	35.00	AK4601/10KD-3.5-H-P3.3-BK-HT	54601100302R	200
11	38.50	AK4601/11KD-3.5-H-P3.3-BK-HT	54601110302R	200
12	42.00	AK4601/12KD-3.5-H-P3.3-BK-HT	54601120302R	200

RATINGS		
Usegroup	B	D
Rated Voltage	300 V	300 V
Rated Current	10 A	10 A
Rated Wire Size		
solid	AWG 24-16	AWG 24-16
stranded	AWG 24-16	AWG 24-16
Test Voltage	1.6 kV	1.6 kV

*Approval Pending

RATINGS						
Overvoltage Category	III		III		III	
Pollution Degree	1		2		3	
Rated Voltage	630 V		320 V		250 V	
Rated Current	8 A		8 A		8 A	
Rated Wire Size	min	max	min	max	min	max
solid (mm²)	0.2	1.5	0.2	1.5	0.2	1.5
stranded (mm²)	0.2	1.5	0.2	1.5	0.2	1.5
Test Voltage	4.0 kV		4.0 kV		4.0 kV	

*Approval Pending

[1]Colours according to RAL, there may be variations on colour due to production conditions.

L'IMPULSION
Retrouvez nous sur
www.limpulsion.fr

NEW

AK4601/..KDVP-3.5-H-P3.3-BK-HT

Spacing 3.5 mm
Pin length 1.5 mm also available

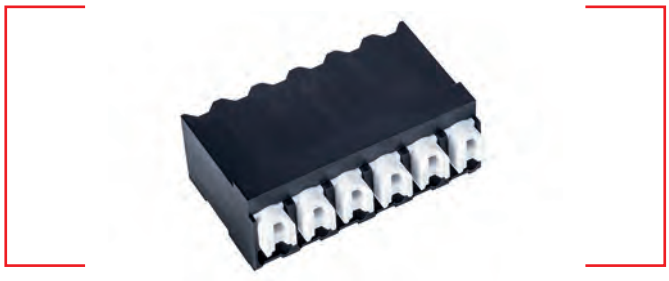

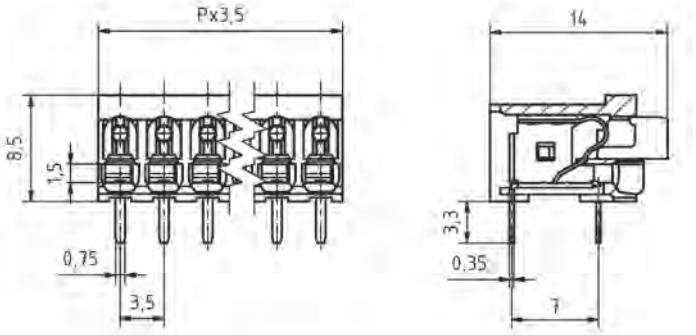

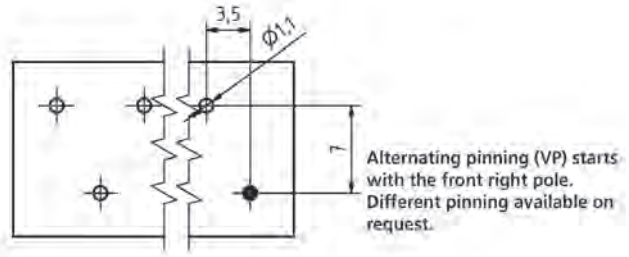

Alternating pinning (VP) starts with the front right pole. Different pinning available on request.

WIRE SIZES	
solid min	0.2 mm²
solid max	1.5 mm²
stranded min	0.2 mm²
stranded max	1.5 mm²
stranded with ferrule min	0.25 mm²
stranded with ferrule max	0.75 mm²
DIMENSIONS	
Stripped Length	10.0 mm
PCB Hole Diameter	1.2 mm
MATERIALS	
Solder Tab	Copper Alloy
Clamp Spring	Stainless Steel
INSULATING MATERIAL	
Material	PA
Flammability Class	UL 94 V-0
TEMPERATURES	
Operating Temperature (without mech. load)	-40 °C - 105 °C
WAVE SOLDERING PROCESS	
Soldering Temperature, recommended	260 °C
Peak Soldering Time, recommended	3-4 s
REFLOW PROCESS	
Soldering Temperature, recommended	217 °C - 245 °C
Peak Soldering Time, recommended	60 s

COLOURS[1]
BLACK, RAL 9011

ORDER DATA (SPACING 3.5 MM)

Poles	Width (mm)	Article Designation	Article Number	PU
2	7.00	AK4601/2KDVP-3.5-H-P3.3-BK-HT	54601020352G	250
3	10.50	AK4601/3KDVP-3.5-H-P3.3-BK-HT	54601030352F	200
4	14.00	AK4601/4KDVP-3.5-H-P3.3-BK-HT	54601040352F	200
5	17.50	AK4601/5KDVP-3.5-H-P3.3-BK-HT	54601050352F	200
6	21.00	AK4601/6KDVP-3.5-H-P3.3-BK-HT	54601060352E	100
7	24.50	AK4601/7KDVP-3.5-H-P3.3-BK-HT	54601070352E	100
8	28.00	AK4601/8KDVP-3.5-H-P3.3-BK-HT	54601080352E	100
9	31.50	AK4601/9KDVP-3.5-H-P3.3-BK-HT	54601090352D	50
10	35.00	AK4601/10KDVP-3.5-H-P3.3-BK-HT	54601100352D	50
11	38.50	AK4601/11KDVP-3.5-H-P3.3-BK-HT	54601110352D	50
12	42.00	AK4601/12KDVP-3.5-H-P3.3-BK-HT	54601120352D	50

RATINGS	c UL us	
Usegroup	B	D
Rated Voltage	300 V	300 V
Rated Current	10 A	10 A
Rated Wire Size		
solid	AWG 24-16	AWG 24-16
stranded	AWG 24-16	AWG 24-16
Test Voltage	1.6 kV	1.6 kV
		*Approval Pending

RATINGS						
Overvoltage Category	III		III		III	
Pollution Degree	1		2		3	
Rated Voltage	630 V		320 V		250 V	
Rated Current	8 A		8 A		8 A	
Rated Wire Size	min	max	min	max	min	max
solid (mm²)	0.2	1.5	0.2	1.5	0.2	1.5
stranded (mm²)	0.2	1.5	0.2	1.5	0.2	1.5
Test Voltage	4.0 kV		4.0 kV		4.0 kV	
						*Approval Pending

[1]Colours according to RAL, there may be variations on colour due to production conditions.

Spacing 3.5 mm
Pin length 1.5 mm also available

AK4601/..KDVP-3.5-H-P3.3-BK-HT

NEW

WIRE SIZES	
solid min	0.2 mm²
solid max	1.5 mm²
stranded min	0.2 mm²
stranded max	1.5 mm²
stranded with ferrule min	0.25 mm²
stranded with ferrule max	0.75 mm²
DIMENSIONS	
Stripped Length	10.0 mm
PCB Hole Diameter	1.2 mm
MATERIALS	
Solder Tab	Copper Alloy
Clamp Spring	Stainless Steel
INSULATING MATERIAL	
Material	PA
Flammability Class	UL 94 V-0
TEMPERATURES	
Operating Temperature (without mech. load)	-40 °C - 105 °C
WAVE SOLDERING PROCESS	
Soldering Temperature, recommended	260 °C
Peak Soldering Time, recommended	3-4 s
REFLOW PROCESS	
Soldering Temperature, recommended	217 °C - 245 °C
Peak Soldering Time, recommended	60 s



Technical drawing see page 124

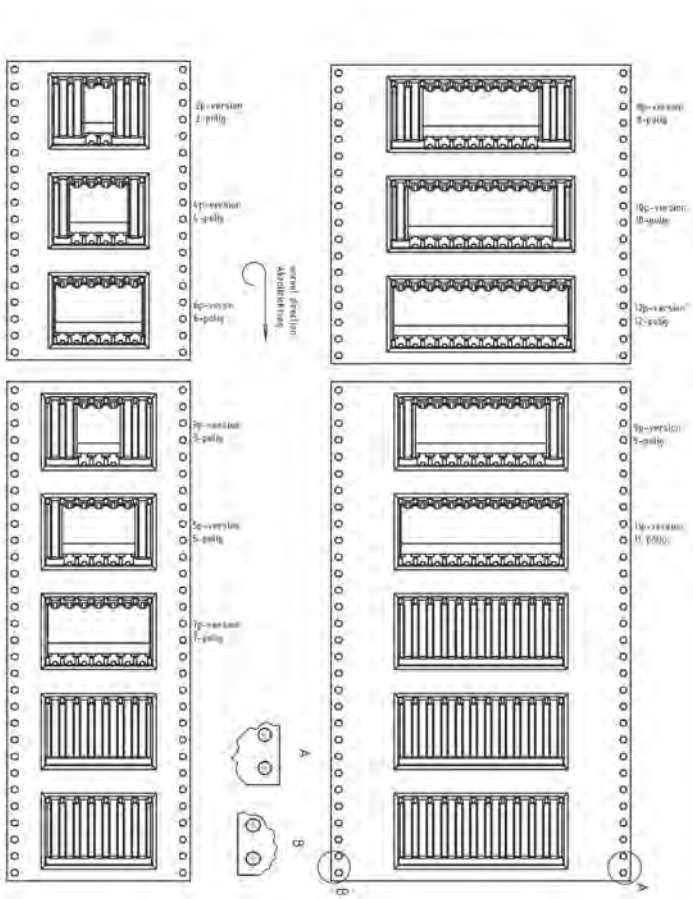

COLOURS[1]

BLACK, RAL 9011

TAPE-ON-REEL

Poles	Reel (RD/")	Width (R/mm)	Pitch (RP/mm)	Pieces (PCS)
2-6	13	44	24	200
7-12	13	72	24	200

ORDER DATA (SPACING 3.5 MM)

Poles	Width (mm)	Article Designation	Article Number	PU
2	7.00	AK4601/2KDVP-3.5-H-P3.3-BK-HT	54601020352F	200
3	10.50	AK4601/3KDVP-3.5-H-P3.3-BK-HT	54601030352F	200
4	14.00	AK4601/4KDVP-3.5-H-P3.3-BK-HT	54601040352F	200
5	17.50	AK4601/5KDVP-3.5-H-P3.3-BK-HT	54601050352E	200
6	21.00	AK4601/6KDVP-3.5-H-P3.3-BK-HT	54601060352E	200
7	24.50	AK4601/7KDVP-3.5-H-P3.3-BK-HT	54601070352E	200
8	28.00	AK4601/8KDVP-3.5-H-P3.3-BK-HT	54601080352D	200
9	31.50	AK4601/9KDVP-3.5-H-P3.3-BK-HT	54601090352D	200
10	35.00	AK4601/10KDVP-3.5-H-P3.3-BK-HT	54601100352D	200
11	38.50	AK4601/11KDVP-3.5-H-P3.3-BK-HT	54601110352D	200
12	42.00	AK4601/12KDVP-3.5-H-P3.3-BK-HT	54601120352D	200

RATINGS		
Usegroup	B	D
Rated Voltage	300 V	300 V
Rated Current	10 A	10 A
Rated Wire Size		
solid	AWG 24-16	AWG 24-16
stranded	AWG 24-16	AWG 24-16
Test Voltage	1.6 kV	1.6 kV

*Approval Pending

RATINGS						
Overvoltage Category	III		III		III	
Pollution Degree	1		2		3	
Rated Voltage	630 V		320 V		250 V	
Rated Current	8 A		8 A		8 A	
Rated Wire Size	min	max	min	max	min	max
solid (mm²)	0.2	1.5	0.2	1.5	0.2	1.5
stranded (mm²)	0.2	1.5	0.2	1.5	0.2	1.5
Test Voltage	4.0 kV		4.0 kV		4.0 kV	

*Approval Pending

[1]Colours according to RAL, there may be variations on colour due to production conditions.

L'IMPULSION
Retrouvez nous sur
www.limpulsion.fr

NEW

AK4601/..KD-3.5-H-BK-SMD

Spacing 3.5 mm



Tape-on-Reel drawing see page 125

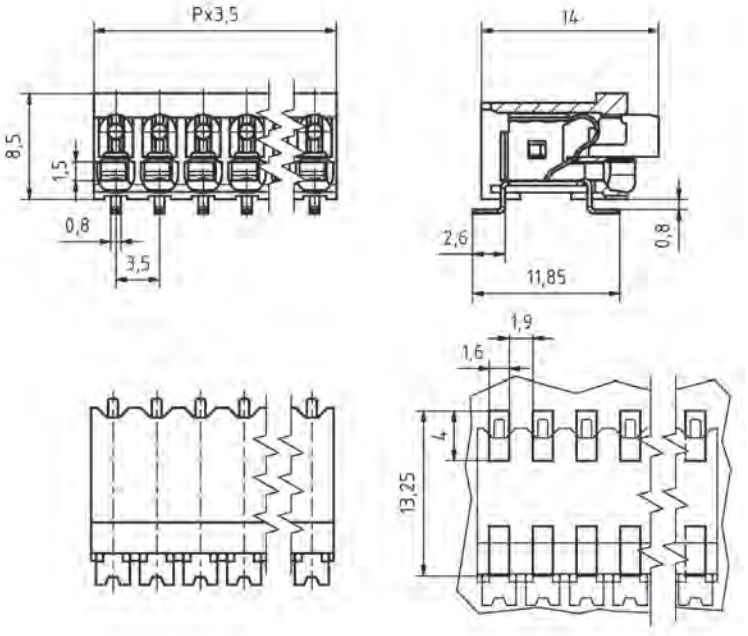

WIRE SIZES	
solid min	0.2 mm²
solid max	1.5 mm²
stranded min	0.2 mm²
stranded max	1.5 mm²
stranded with ferrule min	0.25 mm²
stranded with ferrule max	0.75 mm²
DIMENSIONS	
Stripped Length	10.0 mm
PCB Hole Diameter	1.2 mm
MATERIALS	
Solder Tab	Copper Alloy
Clamp Spring	Stainless Steel
INSULATING MATERIAL	
Material	PA
Flammability Class	UL 94 V-0
TEMPERATURES	
Operating Temperature (without mech. load)	-40 °C - 105 °C
WAVE SOLDERING PROCESS	
Soldering Temperature, recommended	260 °C
Peak Soldering Time, recommended	3-4 s
REFLOW PROCESS	
Soldering Temperature, recommended	217 °C - 245 °C
Peak Soldering Time, recommended	60 s

COLOURS[1]

BLACK, RAL 9011

TAPE-ON-REEL

Poles	Reel (RD/")	Width (R/mm)	Pitch (RP/mm)	Pieces (PCS)
2-6	13	44	24	200
7-12	13	72	24	200

ORDER DATA (SPACING 3.5 MM)

Poles	Width (mm)	Article Designation	Article Number	PU
2	7.00	AK4601/2KD-3.5-H-BK-SMD	54601029302R	200
3	10.50	AK4601/3KD-3.5-H-BK-SMD	54601039302R	200
4	14.00	AK4601/4KD-3.5-H-BK-SMD	54601049302R	200
5	17.50	AK4601/5KD-3.5-H-BK-SMD	54601059302R	200
6	21.00	AK4601/6KD-3.5-H-BK-SMD	54601069302R	200
7	24.50	AK4601/7KD-3.5-H-BK-SMD	54601079302R	200
8	28.00	AK4601/8KD-3.5-H-BK-SMD	54601089302R	200
9	31.50	AK4601/9KD-3.5-H-BK-SMD	54601099302R	200
10	35.00	AK4601/10KD-3.5-H-BK-SMD	54601109302R	200
11	38.50	AK4601/11KD-3.5-H-BK-SMD	54601119302R	200
12	42.00	AK4601/12KD-3.5-H-BK-SMD	54601129302R	200

RATINGS		
Usegroup	B	D
Rated Voltage	300 V	300 V
Rated Current	10 A	10 A
Rated Wire Size		
solid	AWG 24-16	AWG 24-16
stranded	AWG 24-16	AWG 24-16
Test Voltage	1.6 kV	1.6 kV

*Approval Pending

RATINGS						
Overvoltage Category	III		III		III	
Pollution Degree	1		2		3	
Rated Voltage	630 V		320 V		250 V	
Rated Current	8 A		8 A		8 A	
Rated Wire Size	min	max	min	max	min	max
solid (mm²)	0.2	1.5	0.2	1.5	0.2	1.5
stranded (mm²)	0.2	1.5	0.2	1.5	0.2	1.5
Test Voltage	4.0 kV		4.0 kV		4.0 kV	

*Approval Pending

[1]Colours according to RAL, there may be variations on colour due to production conditions.

Spacing 3.81 mm
1- to n-poles

AKZ4701/..KD-3.81-V-BASALTGREY

WIRE SIZES	
solid min	0.14 mm²
solid max	1.5 mm²
stranded min	0.14 mm²
stranded max	1.5 mm²
stranded with ferrule min	0.14 mm²
stranded with ferrule max	0.34 mm²
DIMENSIONS	
Stripped Length	10.0 mm
PCB Hole Diameter	1.4 mm
MATERIALS	
Solder Tab	Brass
Clamp Spring	Stainless Steel
INSULATING MATERIAL	
Material	PBT
Flammability Class	UL 94 V-0
TEMPERATURES	
Operating Temperature (without mech. load)	-40 °C - 105 °C
WAVE SOLDERING PROCESS	
Soldering Temperature, recommended	260 °C
Peak Soldering Time, recommended	3-4 s
REFLOW PROCESS	
Soldering Temperature, recommended	-
Peak Soldering Time, recommended	-



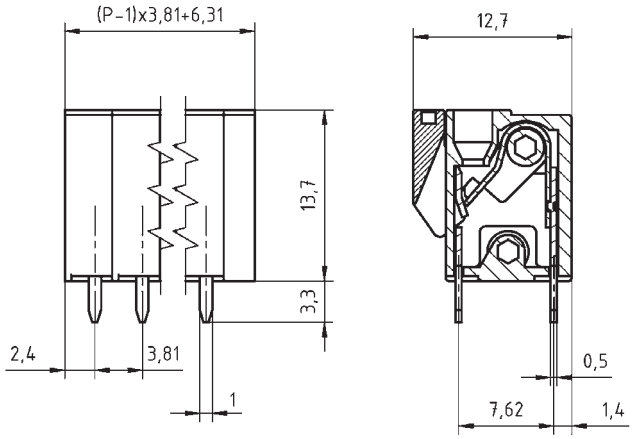

COLOURS[1]

	BASALT GREY, RAL 7012		GREEN, RAL 6018
	LIGHT GREEN, similar RAL 6018		

ORDER DATA (SPACING 3.81 MM)

Poles	Width (mm)	Article Designation	Article Number	PU
1	6.31	AKZ4701/1KD-3.81-V-BASALTGREY	54701010421G	250
2	10.12	AKZ4701/2KD-3.81-V-BASALTGREY	54701020421F	200
3	13.93	AKZ4701/3KD-3.81-V-BASALTGREY	54701030421F	200
4	17.74	AKZ4701/4KD-3.81-V-BASALTGREY	54701040421F	200
5	21.55	AKZ4701/5KD-3.81-V-BASALTGREY	54701050421E	100
6	25.36	AKZ4701/6KD-3.81-V-BASALTGREY	54701060421E	100
7	29.17	AKZ4701/7KD-3.81-V-BASALTGREY	54701070421E	100
8	32.98	AKZ4701/8KD-3.81-V-BASALTGREY	54701080421D	50
9	36.79	AKZ4701/9KD-3.81-V-BASALTGREY	54701090421D	50
10	40.60	AKZ4701/10KD-3.81-V-BASALTGREY	54701100421D	50
11	44.41	AKZ4701/11KD-3.81-V-BASALTGREY	54701110421D	50
12	48.22	AKZ4701/12KD-3.81-V-BASALTGREY	54701120421D	50

RATINGS	c UL us			VDE	
Usegroup	B	C	D		
Rated Voltage	300 V	-	300 V	130 V	
Rated Current	6 A	-	6 A	12 A	
Rated Wire Size				min	max
solid	AWG 26-16	-	AWG 26-16	0.2 mm²	1.5 mm²
stranded	AWG 26-16	-	AWG 26-16	0.2 mm²	1.5 mm²
Test Voltage	1.6 kV	-	1.6 kV	1.25 kV	

[1]Colours according to RAL, there may be variations on colour due to production conditions. Special colours on request.

L'IMPULSION
Retrouvez nous sur
www.limpulsion.fr

AKZ4701/..KD-3.81-H-BASALTGREY

Spacing 3.81 mm
1- to n-poles



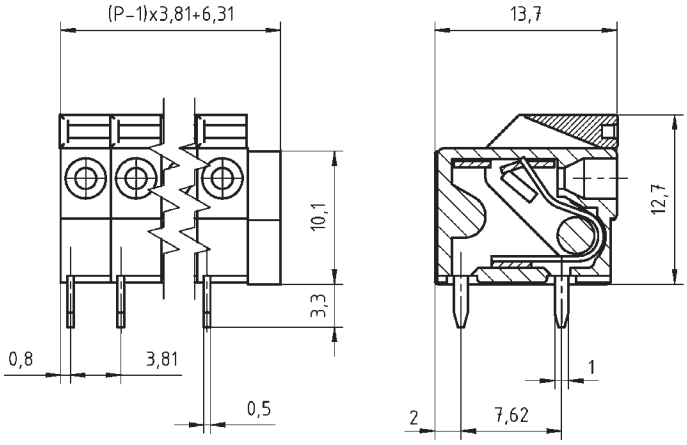

WIRE SIZES	
solid min	0.14 mm²
solid max	1.5 mm²
stranded min	0.14 mm²
stranded max	1.5 mm²
stranded with ferrule min	0.14 mm²
stranded with ferrule max	0.34 mm²
DIMENSIONS	
Stripped Length	10.0 mm
PCB Hole Diameter	1.4 mm
MATERIALS	
Solder Tab	Brass
Clamp Spring	Stainless Steel
INSULATING MATERIAL	
Material	PBT
Flammability Class	UL 94 V-0
TEMPERATURES	
Operating Temperature (without mech. load)	-40 °C - 105 °C
WAVE SOLDERING PROCESS	
Soldering Temperature, recommended	260 °C
Peak Soldering Time, recommended	3-4 s
REFLOW PROCESS	
Soldering Temperature, recommended	-
Peak Soldering Time, recommended	-

COLOURS[1]

	BASALT GREY, RAL 7012		GREEN, RAL 6018
	LIGHT GREEN, similar RAL 6018		

ORDER DATA (SPACING 3.81 MM)

Poles	Width (mm)	Article Designation	Article Number	PU
1	6.31	AKZ4701/1KD-3.81-H-BASALTGREY	54701010422G	250
2	10.12	AKZ4701/2KD-3.81-H-BASALTGREY	54701020422F	200
3	13.93	AKZ4701/3KD-3.81-H-BASALTGREY	54701030422F	200
4	17.74	AKZ4701/4KD-3.81-H-BASALTGREY	54701040422F	200
5	21.55	AKZ4701/5KD-3.81-H-BASALTGREY	54701050422E	100
6	25.36	AKZ4701/6KD-3.81-H-BASALTGREY	54701060422E	100
7	29.17	AKZ4701/7KD-3.81-H-BASALTGREY	54701070422E	100
8	32.98	AKZ4701/8KD-3.81-H-BASALTGREY	54701080422D	50
9	36.79	AKZ4701/9KD-3.81-H-BASALTGREY	54701090422D	50
10	40.60	AKZ4701/10KD-3.81-H-BASALTGREY	54701100422D	50
11	44.41	AKZ4701/11KD-3.81-H-BASALTGREY	54701110422D	50
12	48.22	AKZ4701/12KD-3.81-H-BASALTGREY	54701120422D	50

RATINGS	cULus			VDE	
Usegroup	B	C	D		
Rated Voltage	300 V	-	300 V	130 V	
Rated Current	6 A	-	6 A	12 A	
Rated Wire Size				min	max
solid	AWG 26-16	-	AWG 26-16	0.2 mm²	1.5 mm²
stranded	AWG 26-16	-	AWG 26-16	0.2 mm²	1.5 mm²
Test Voltage	1.6 kV	-	1.6 kV	1.25 kV	

[1]Colours according to RAL, there may be variations on colour due to production conditions. Special colours on request.

Spacing 4.0 mm

AK4091/..KD-4.0-WH-SMD

WIRE SIZES	
solid min	0.2 mm²
solid max	0.75 mm²
stranded min	0.2 mm²
stranded max	0.75 mm²
stranded with ferrule min	0.14 mm²
stranded with ferrule max	0.34 mm²
DIMENSIONS	
Stripped Length	7.0 mm
PCB Hole Diameter	-
MATERIALS	
Metal	Copper Alloy
INSULATING MATERIAL	
Material	PPA
Flammability Class	UL 94 V-0
TEMPERATURES	
Operating Temperature (without mech. load)	-60 °C - 105 °C
WAVE SOLDERING PROCESS	
Soldering Temperature, recommended	-
Peak Soldering Time, recommended	-
REFLOW PROCESS	
Soldering Temperature, recommended	217 °C - 245 °C
Peak Soldering Time, recommended	60 s



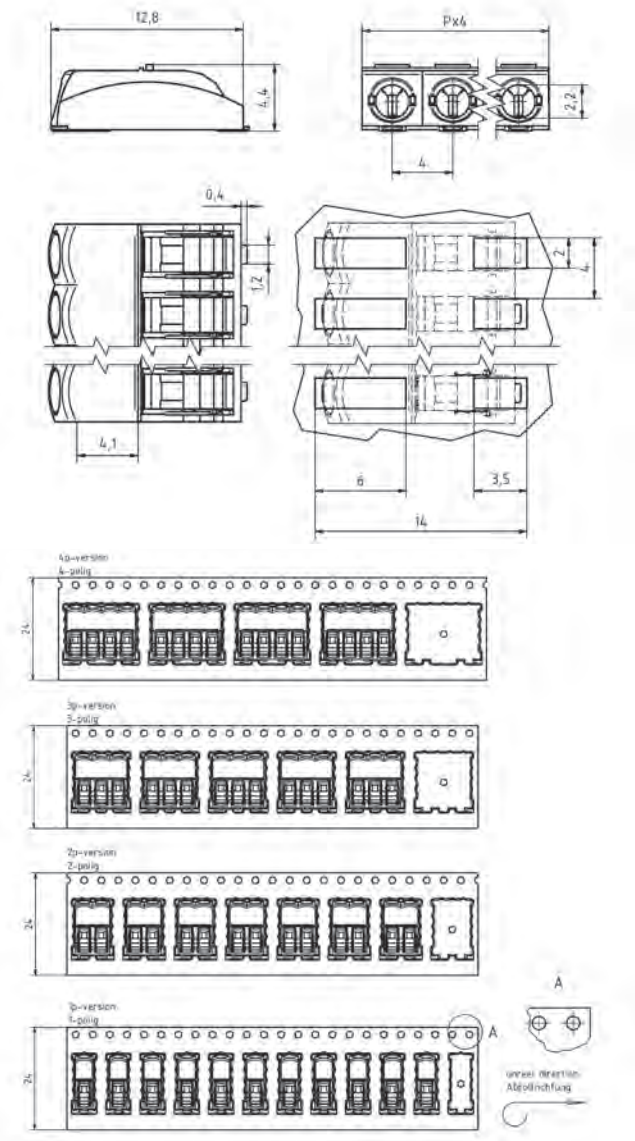

COLOURS[1]
▭ WHITE, RAL 9003

TAPE-ON-REEL

Poles	Reel (RD/")	Width (R/mm)	Pitch (RP/mm)	Pieces (PCS)
1	13	24	8	1500
2	13	24	12	1000
3	13	24	16	750
4	13	24	20	600

ORDER DATA (SPACING 4.0 MM)

Poles	Width (mm)	Article Designation	Article Number	PU
1	4.00	AK4091/1KD-4.0-WH-SMD	54091019001R	1500
2	8.00	AK4091/2KD-4.0-WH-SMD	54091029001R	1000
3	12.00	AK4091/3KD-4.0-WH-SMD	54091039001R	750
4	16.00	AK4091/4KD-4.0-WH-SMD	54091049001R	600

RATINGS (c UL us)	
Rated Voltage (1 pole)	600 V
Rated Current (2 pole)	320 V
Nennstrom	9 A
Rated Wire Size	
solid	AWG 24-18
stranded	AWG 24-18
Test Voltage	-

RATINGS (VDE)						
Overvoltage Category	II		III		III	
Pollution Degree	2		2		3	
Rated Voltage	320 V		160 V		63 V	
Rated Current	9 A		9 A		9 A	
Rated Wire Size	min	max	min	max	min	max
solid (mm²)	0.2	0.75	0.2	0.75	0.2	0.75
stranded (mm²)	0.2	0.75	0.2	0.75	0.2	0.75
Test Voltage	2.5 kV		2.5 kV		2.5 kV	

[1]Colours according to RAL, there may be variations on colour due to production conditions.

L'IMPULSION
Retrouvez nous sur
www.limpulsion.fr

AK4100/..-5.0-PEBBLE GREY

Spacing 5.0 mm
1- to n-poles



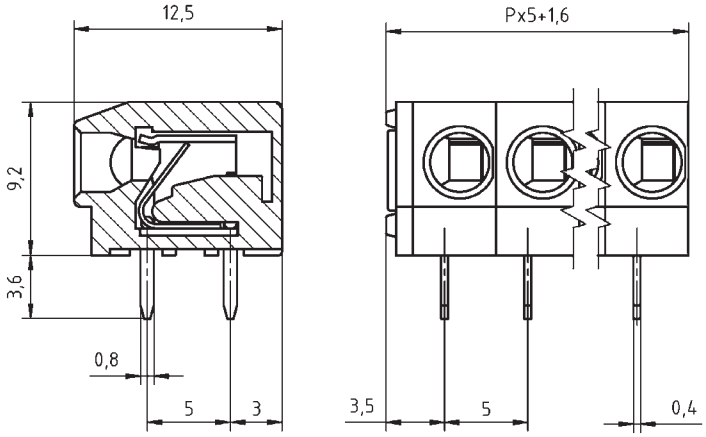

WIRE SIZES	
solid min	0.08 mm²
solid max	2.5 mm²
stranded min	0.08 mm²
stranded max	2.5 mm²
stranded with ferrule min	0.14 mm²
stranded with ferrule max	1.0 mm²
DIMENSIONS	
Stripped Length	9.0 mm
PCB Hole Diameter	1.0 mm
MATERIALS	
Solder Tab	Copper Alloy
Clamp Spring	Stainless Steel
INSULATING MATERIAL	
Material	PA 6.6
Flammability Class	UL 94 V-0
TEMPERATURES	
Operating Temperature (without mech. load)	-40 °C - 105 °C
WAVE SOLDERING PROCESS	
Soldering Temperature, recommended	260 °C
Peak Soldering Time, recommended	3-4 s
REFLOW PROCESS	
Soldering Temperature, recommended	-
Peak Soldering Time, recommended	-

COLOURS[1]

PEBBLE GREY, RAL 7032 | BLUE, RAL 5015

ACCESSORIES

	Description	Article Number
	Bridge, 2-pole, insulated, BRI/2-5.0/5.08-LIGHT GREY	50000000006
	Bridge, 3-pole, insulated, BRI/3-5.0/5.08-LIGHT GREY	50000000007

ORDER DATA (SPACING 5.0 MM)

Poles	Width (mm)	Article Designation	Article Number	PU
1	6.60	AK4100/1-5.0-PEBBLE GREY	54100010001G	250
2	11.60	AK4100/2-5.0-PEBBLE GREY	54100020001F	200
3	16.60	AK4100/3-5.0-PEBBLE GREY	54100030001F	200
4	21.60	AK4100/4-5.0-PEBBLE GREY	54100040001E	100
5	26.60	AK4100/5-5.0-PEBBLE GREY	54100050001E	100
6	31.60	AK4100/6-5.0-PEBBLE GREY	54100060001D	50
7	36.60	AK4100/7-5.0-PEBBLE GREY	54100070001D	50
8	41.60	AK4100/8-5.0-PEBBLE GREY	54100080001D	50
9	46.60	AK4100/9-5.0-PEBBLE GREY	54100090001D	50
10	51.60	AK4100/10-5.0-PEBBLE GREY	54100100001D	50
11	56.60	AK4100/11-5.0-PEBBLE GREY	54100110001D	50
12	61.60	AK4100/12-5.0-PEBBLE GREY	54100120001D	50

RATINGS

	c UL us			VDE	
Usegroup	B	C	D		
Rated Voltage	300 V	-	300 V	250 V	
Rated Current	10 A	-	10 A	17.5 A	
Rated Wire Size				min	max
solid	AWG 20-14	-	AWG 20-14	0.5 mm²	2.5 mm²
stranded	-	-	-	-	-
Test Voltage	1.6 kV	-	1.6 kV	2.0 kV	

[1]Colours according to RAL, there may be variations on colour due to production conditions. Special colours on request.

Spacing 5.0 mm
1- to n-poles

AK4101/..KD-5.0-PEBBLE GREY

WIRE SIZES	
solid min	0.08 mm²
solid max	2.5 mm²
stranded min	0.5 mm²
stranded max	1.5 mm²
stranded with ferrule min	0.14 mm²
stranded with ferrule max	1.0 mm²
DIMENSIONS	
Stripped Length	9.0 mm
PCB Hole Diameter	1.0 mm
MATERIALS	
Solder Tab	Copper Alloy
Clamp Spring	Stainless Steel
INSULATING MATERIAL	
Material	PA 6.6
Flammability Class	UL 94 V-0
TEMPERATURES	
Operating Temperature (without mech. load)	-40 °C - 105 °C
WAVE SOLDERING PROCESS	
Soldering Temperature, recommended	260 °C
Peak Soldering Time, recommended	3-4 s
REFLOW PROCESS	
Soldering Temperature, recommended	-
Peak Soldering Time, recommended	-



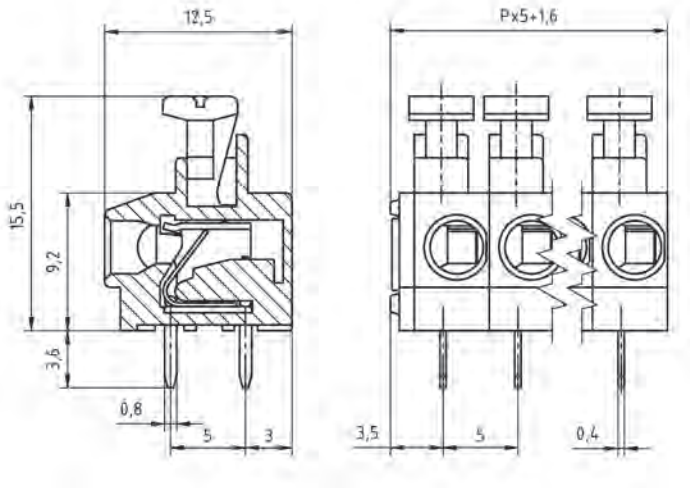

COLOURS[1]

PEBBLE GREY, RAL 7032 BLUE, RAL 5015

ORDER DATA (SPACING 5.0 MM)

Poles	Width (mm)	Article Designation	Article Number	PU
1	6.60	AK4101/1KD-5.0-PEBBLE GREY	54101010001G	250
2	11.60	AK4101/2KD-5.0-PEBBLE GREY	54101020001F	200
3	16.60	AK4101/3KD-5.0-PEBBLE GREY	54101030001F	200
4	21.60	AK4101/4KD-5.0-PEBBLE GREY	54101040001E	100
5	26.60	AK4101/5KD-5.0-PEBBLE GREY	54101050001E	100
6	31.60	AK4101/6KD-5.0-PEBBLE GREY	54101060001D	50
7	36.60	AK4101/7KD-5.0-PEBBLE GREY	54101070001D	50
8	41.60	AK4101/8KD-5.0-PEBBLE GREY	54101080001D	50
9	46.60	AK4101/9KD-5.0-PEBBLE GREY	54101090001D	50
10	51.60	AK4101/10KD-5.0-PEBBLE GREY	54101100001D	50
11	56.60	AK4101/11KD-5.0-PEBBLE GREY	54101110001D	50
12	61.60	AK4101/12KD-5.0-PEBBLE GREY	54101120001D	50

ACCESSORIES

	Description	Article Number
	Bridge, 2-pole, insulated, BRI/2-5.0/5.08-LIGHT GREY	50000000006
	Bridge, 3-pole, insulated, BRI/3-5.0/5.08-LIGHT GREY	50000000007

RATINGS	cULus		VDE	
Usegroup	B	C	D	
Rated Voltage	300 V	-	300 V	250 V
Rated Current	10 A	-	10 A	17.5 A
Rated Wire Size			min	max
solid	AWG 20-14	-	AWG 20-14	0.5 mm² 2.5 mm²
stranded	-	-	-	- -
Test Voltage	1.6 kV	-	1.6 kV	2.0 kV

[1]Colours according to RAL, there may be variations on colour due to production conditions. Special colours on request.

L'IMPULSION
Retrouvez nous sur
www.limpulsion.fr

AK4200/..-5.0-V-baGY

Spacing 5.0 mm
1- to n-poles



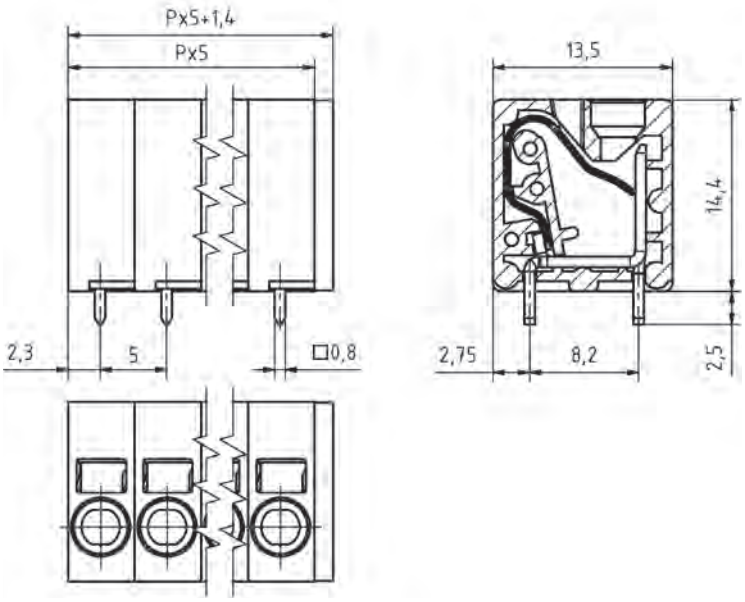

WIRE SIZES	
solid min	0.2 mm²
solid max	4.0 mm²
stranded min	0.2 mm²
stranded max	2.5 mm²
stranded with ferrule min	0.2 mm²
stranded with ferrule max	2.5 mm²
DIMENSIONS	
Stripped Length	10.0 mm
PCB Hole Diameter	1.1 mm
MATERIALS	
Solder Tab	Copper Alloy
Clamp Spring	Stainless Steel
INSULATING MATERIAL	
Material	PA 6.6
Flammability Class	UL 94 V-0
TEMPERATURES	
Operating Temperature (without mech. load)	-40 °C - 105 °C
WAVE SOLDERING PROCESS	
Soldering Temperature, recommended	260 °C
Peak Soldering Time, recommended	3-4 s
REFLOW PROCESS	
Soldering Temperature, recommended	-
Peak Soldering Time, recommended	-

COLOURS[1]

BASALT GREY, RAL 7012		TRAFFIC GREY, RAL 7042	
LIGHT GREY, RAL 7035		BLACK, RAL 9011	
LIGHT GREEN, similar RAL 6018		GREEN, RAL 6018	
GREEN/YELLOW, RAL 6018 - 1018/S		RED, RAL 3003	
ORANGE, RAL 2011		BLUE, RAL 5015	
WHITE, RAL 9003			

ACCESSORIES

	Description	Article Number
	Spacer SPC-AK4200-baGY	54200000000
	Side Wall with Coding Pin SW-AK4200-CP-V-baGY	54200000001

ORDER DATA (SPACING 5.0 MM)

Poles	Width (mm)	Article Designation	Article Number	PU
1	6.40	AK4200/1-5.0-V-baGY	54200010421E	100
2	11.40	AK4200/2-5.0-V-baGY	54200020421D	50
3	16.40	AK4200/3-5.0-V-baGY	54200030421D	50
4	21.40	AK4200/4-5.0-V-baGY	54200040421D	50
5	26.40	AK4200/5-5.0-V-baGY	54200050421D	50
6	31.40	AK4200/6-5.0-V-baGY	54200060421D	50
7	36.40	AK4200/7-5.0-V-baGY	54200070421D	50
8	41.40	AK4200/8-5.0-V-baGY	54200080421D	50
9	46.40	AK4200/9-5.0-V-baGY	54200090421D	50
10	51.40	AK4200/10-5.0-V-baGY	54200100421D	50
11	56.40	AK4200/11-5.0-V-baGY	54200110421D	50
12	61.40	AK4200/12-5.0-V-baGY	54200120421D	50

RATINGS

	cULus			VDE	
Usegroup	B	C	D		
Rated Voltage	300 V	-	300 V	250 V	
Rated Current	20 A	-	10 A	24 A	
Overvoltage Category				III	
Rated Wire Size				min	max
solid	AWG 24-12	-	AWG 24-12	0.2 mm²	2.5 mm²
stranded	AWG 24-12	-	AWG 24-12	0.2 mm²	2.5 mm²
Test Voltage	1.6 kV	-	1.6 kV	2.0 kV	

[1]Colours according to RAL, there may be variations on colour due to production conditions. Special colours on request.

Spacing 5.0 mm
1- to n-poles

AK4200/..-5.0-H-baGY



WIRE SIZES	
solid min	0.2 mm²
solid max	4.0 mm²
stranded min	0.2 mm²
stranded max	2.5 mm²
stranded with ferrule min	0.2 mm²
stranded with ferrule max	2.5 mm²
DIMENSIONS	
Stripped Length	10.0 mm
PCB Hole Diameter	1.1 mm
MATERIALS	
Solder Tab	Copper Alloy
Clamp Spring	Stainless Steel
INSULATING MATERIAL	
Material	PA 6.6
Flammability Class	UL 94 V-0
TEMPERATURES	
Operating Temperature (without mech. load)	-40 °C - 105 °C
WAVE SOLDERING PROCESS	
Soldering Temperature, recommended	260 °C
Peak Soldering Time, recommended	3-4 s
REFLOW PROCESS	
Soldering Temperature, recommended	-
Peak Soldering Time, recommended	-

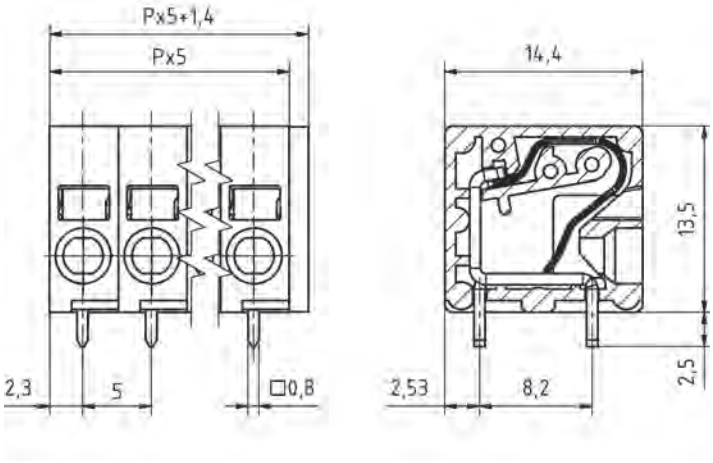

COLOURS[1]

	BASALT GREY, RAL 7012		TRAFFIC GREY, RAL 7042
	LIGHT GREY, RAL 7035		BLACK, RAL 9011
	LIGHT GREEN, similar RAL 6018		GREEN, RAL 6018
	GREEN/YELLOW, RAL 6018 - 1018/S		RED, RAL 3003
	ORANGE, RAL 2011		BLUE, RAL 5015
	WHITE, RAL 9003		

ORDER DATA (SPACING 5.0 MM)

Poles	Width (mm)	Article Designation	Article Number	PU
1	6.40	AK4200/1-5.0-H-baGY	54200010451E	100
2	11.40	AK4200/2-5.0-H-baGY	54200020451D	50
3	16.40	AK4200/3-5.0-H-baGY	54200030451D	50
4	21.40	AK4200/4-5.0-H-baGY	54200040451D	50
5	26.40	AK4200/5-5.0-H-baGY	54200050451D	50
6	31.40	AK4200/6-5.0-H-baGY	54200060451D	50
7	36.40	AK4200/7-5.0-H-baGY	54200070451D	50
8	41.40	AK4200/8-5.0-H-baGY	54200080451D	50
9	46.40	AK4200/9-5.0-H-baGY	54200090451D	50
10	51.40	AK4200/10-5.0-H-baGY	54200100451D	50
11	56.40	AK4200/11-5.0-H-baGY	54200110451D	50
12	61.40	AK4200/12-5.0-H-baGY	54200120451D	50

ACCESSORIES

	Description	Article Number
	Spacer SPC-AK4200-baGY	54200000000
	Side Wall with Coding Pin SW-AK4200-CP-H-baGY	54200000002

RATINGS

	c UL us			VDE	
Usegroup	B	C	D		
Rated Voltage	300 V	-	300 V	250 V	
Rated Current	20 A	-	10 A	24 A	
Overvoltage Category				III	
Rated Wire Size				min	max
solid	AWG 24-12	-	AWG 24-12	0.2 mm²	2.5 mm²
stranded	AWG 24-12	-	AWG 24-12	0.2 mm²	2.5 mm²
Test Voltage	1.6 kV	-	1.6 kV	2.0 kV	

[1]Colours according to RAL, there may be variations on colour due to production conditions. Special colours on request.

L'IMPULSION
Retrouvez nous sur
www.limpulsion.fr

AKZ4301/..KD-5.08-BASALTGREY

Spacing 5.08 mm



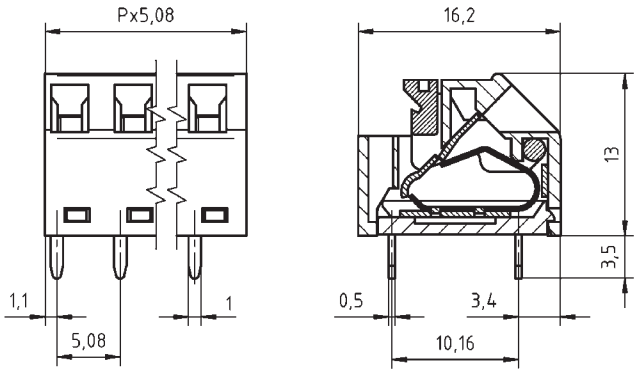

WIRE SIZES	
solid min	0.08 mm²
solid max	1.5 mm²
stranded min	0.20 mm²
stranded max	1.5 mm²
stranded with ferrule min	0.14 mm²
stranded with ferrule max	1.0 mm²
DIMENSIONS	
Stripped Length	11.0 mm
PCB Hole Diameter	1.4 mm
MATERIALS	
Solder Tab	Brass
Clamp Spring	Stainless Steel
INSULATING MATERIAL	
Material	PA 6.6
Flammability Class	UL 94 V-0
TEMPERATURES	
Operating Temperature (without mech. load)	-40 °C - 105 °C
WAVE SOLDERING PROCESS	
Soldering Temperature, recommended	260 °C
Peak Soldering Time, recommended	3-4 s
REFLOW PROCESS	
Soldering Temperature, recommended	-
Peak Soldering Time, recommended	-

COLOURS[1]

BASALT GREY, RAL 7012		GREEN, RAL 6018	
LIGHT GREEN, similar RAL 6018			

ORDER DATA (SPACING 5.08 MM)

Poles	Width (mm)	Article Designation	Article Number	PU
2	10.16	AKZ4301/2KD-5.08-BASALTGREY	54301020421D	50
3	15.24	AKZ4301/3KD-5.08-BASALTGREY	54301030421D	50
4	20.32	AKZ4301/4KD-5.08-BASALTGREY	54301040421D	50
5	25.40	AKZ4301/5KD-5.08-BASALTGREY	54301050421D	50
6	30.48	AKZ4301/6KD-5.08-BASALTGREY	54301060421D	50
7	35.56	AKZ4301/7KD-5.08-BASALTGREY	54301070421D	50
8	40.64	AKZ4301/8KD-5.08-BASALTGREY	54301080421D	50

RATINGS	c UL us			VDE	
Usegroup	B	C	D		
Rated Voltage	300 V	-	300 V	250 V	
Rated Current	10 A	-	10 A	16 A	
Rated Wire Size				min	max
solid	AWG 22-16	-	AWG 22-16	0.2 mm²	1.5 mm²
stranded	AWG 22-16	-	AWG 22-16	0.2 mm²	1.5 mm²
Test Voltage	1.6 kV	-	1.6 kV	2.0 kV	

[1]Colours according to RAL, there may be variations on colour due to production conditions. Special colours on request.

Spacing 6.0 mm
Pin length 1.5 mm also available

AK4092/..KD-6.0-P2.4-WH-HT

NEW



WIRE SIZES	
solid min	0.5 mm²
solid max	1.5 mm²
stranded min	0.5 mm²
stranded max	1.5 mm²
stranded with ferrule min	0.5 mm²
stranded with ferrule max	0.75 mm²
DIMENSIONS	
Stripped Length	7.0 mm
PCB Hole Diameter	1.5 mm
MATERIALS	
Metal	Copper Alloy
INSULATING MATERIAL	
Material	PPA
Flammability Class	UL 94 V-0
TEMPERATURES	
Operating Temperature (without mech. load)	-60 °C - 105 °C
WAVE SOLDERING PROCESS	
Soldering Temperature, recommended	-
Peak Soldering Time, recommended	-
REFLOW PROCESS	
Soldering Temperature, recommended	217 °C - 245 °C
Peak Soldering Time, recommended	60 s

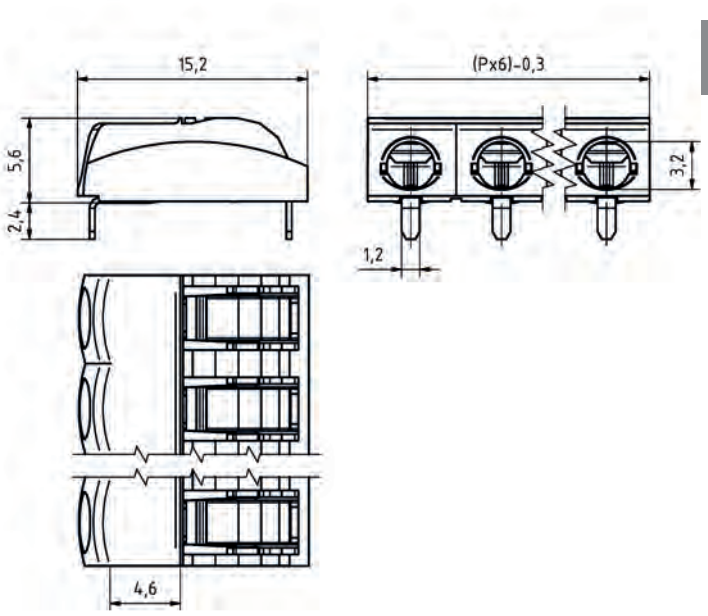

COLOURS[1]

WHITE, RAL 9003

ORDER DATA (SPACING 6.0 MM)

Poles	Width (mm)	Article Designation	Article Number	PU
1	5.70	AK4092/1KD-6.0-P2.4-WH-HT	54092010001F	200
2	11.70	AK4092/2KD-6.0-P2.4-WH-HT	54092020001F	200
3	17.70	AK4092/3KD-6.0-P2.4-WH-HT	54092030001E	100
4	23.70	AK4092/4KD-6.0-P2.4-WH-HT	54092040001E	100

RATINGS	
Rated Voltage (1 pole)	600 V
Rated Current (2 pole)	300 V
Nennstrom	10 A
Rated Wire Size	
solid	AWG 20-16
stranded	AWG 20-16
Test Voltage	-

*Approval Pending

RATINGS						
Overvoltage Category	II		III		III	
Pollution Degree	2		2		3	
Rated Voltage	630 V		320 V		250 V	
Rated Current	17.5 A		17.5 A		17.5 A	
Rated Wire Size	min	max	min	max	min	max
solid (mm²)	0.5	1.5	0.5	1.5	0.5	1.5
stranded (mm²)	0.5	1.5	0.5	1.5	0.5	1.5
Test Voltage	4.0 kV		4.0 kV		4.0 kV	

*Approval Pending

[1]Colours according to RAL, there may be variations on colour due to production conditions.

L'IMPULSION
Retrouvez nous sur
www.limpulsion.fr

NEW

AK4092/..KD-6.0-P2.4-WH-HT

Spacing 6.0 mm
Pin length 1.5 mm also available



Technical drawing see page 135

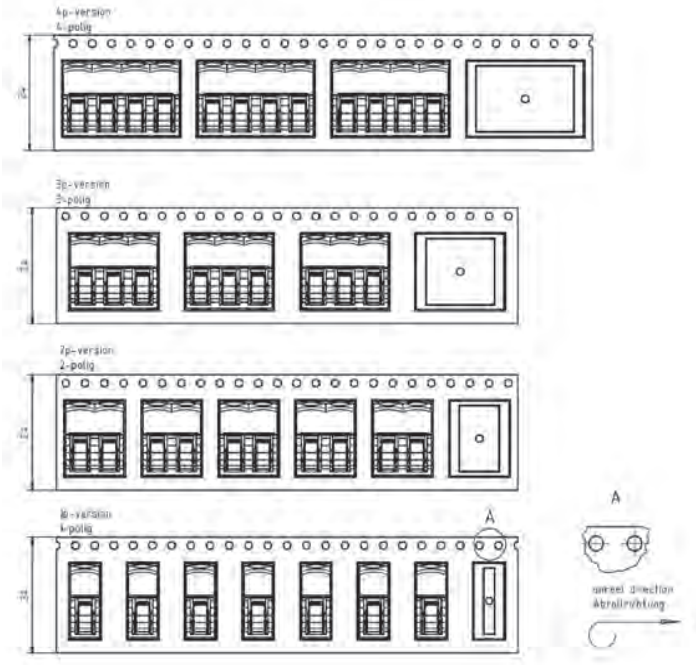

WIRE SIZES	
solid min	0.5 mm²
solid max	1.5 mm²
stranded min	0.5 mm²
stranded max	1.5 mm²
stranded with ferrule min	0.5 mm²
stranded with ferrule max	0.75 mm²
DIMENSIONS	
Stripped Length	7.0 mm
PCB Hole Diameter	1.5 mm
MATERIALS	
Metal	Copper Alloy
INSULATING MATERIAL	
Material	PPA
Flammability Class	UL 94 V-0
TEMPERATURES	
Operating Temperature (without mech. load)	-60 °C - 105 °C
WAVE SOLDERING PROCESS	
Soldering Temperature, recommended	-
Peak Soldering Time, recommended	-
REFLOW PROCESS	
Soldering Temperature, recommended	217 °C - 245 °C
Peak Soldering Time, recommended	60 s

COLOURS[1]
WHITE, RAL 9003

TAPE-ON-REEL

Poles	Reel (RD/")	Width (R/mm)	Pitch (RP/mm)	Pieces (PCS)
1	13	24	12	640
2	13	24	16	480
3	13	24	24	320
4	13	24	28	270

ORDER DATA (SPACING 6.0 MM)

Poles	Width (mm)	Article Designation	Article Number	PU
1	5.70	AK4092/1KD-6.0-P2.4-WH-HT	54092010001R	640
2	11.70	AK4092/2KD-6.0-P2.4-WH-HT	54092020001R	480
3	17.70	AK4092/3KD-6.0-P2.4-WH-HT	54092030001R	320
4	23.70	AK4092/4KD-6.0-P2.4-WH-HT	54092040001R	270

RATINGS (cULus)	
Rated Voltage (1 pole)	600 V
Rated Current (2 pole)	300 V
Nennstrom	10 A
Rated Wire Size	
solid	AWG 20-16
stranded	AWG 20-16
Test Voltage	-

*Approval Pending

RATINGS (VDE)						
Overvoltage Category	II		III		III	
Pollution Degree	2		2		3	
Rated Voltage	630 V		320 V		250 V	
Rated Current	17.5 A		17.5 A		17.5 A	
Rated Wire Size	min	max	min	max	min	max
solid (mm²)	0.5	1.5	0.5	1.5	0.5	1.5
stranded (mm²)	0.5	1.5	0.5	1.5	0.5	1.5
Test Voltage	4.0 kV		4.0 kV		4.0 kV	

*Approval Pending

[1]Colours according to RAL, there may be variations on colour due to production conditions.

Spacing 6.0 mm

AK4092/..KD-6.0-WH-SMD

NEW

WIRE SIZES	
solid min	0.5 mm²
solid max	1.5 mm²
stranded min	0.5 mm²
stranded max	1.5 mm²
stranded with ferrule min	0.5 mm²
stranded with ferrule max	0.75 mm²
DIMENSIONS	
Stripped Length	7.0 mm
PCB Hole Diameter	-
MATERIALS	
Metal	Copper Alloy
INSULATING MATERIAL	
Material	PPA
Flammability Class	UL 94 V-0
TEMPERATURES	
Operating Temperature (without mech. load)	-60 °C - 105 °C
WAVE SOLDERING PROCESS	
Soldering Temperature, recommended	-
Peak Soldering Time, recommended	-
REFLOW PROCESS	
Soldering Temperature, recommended	217 °C - 245 °C
Peak Soldering Time, recommended	60 s



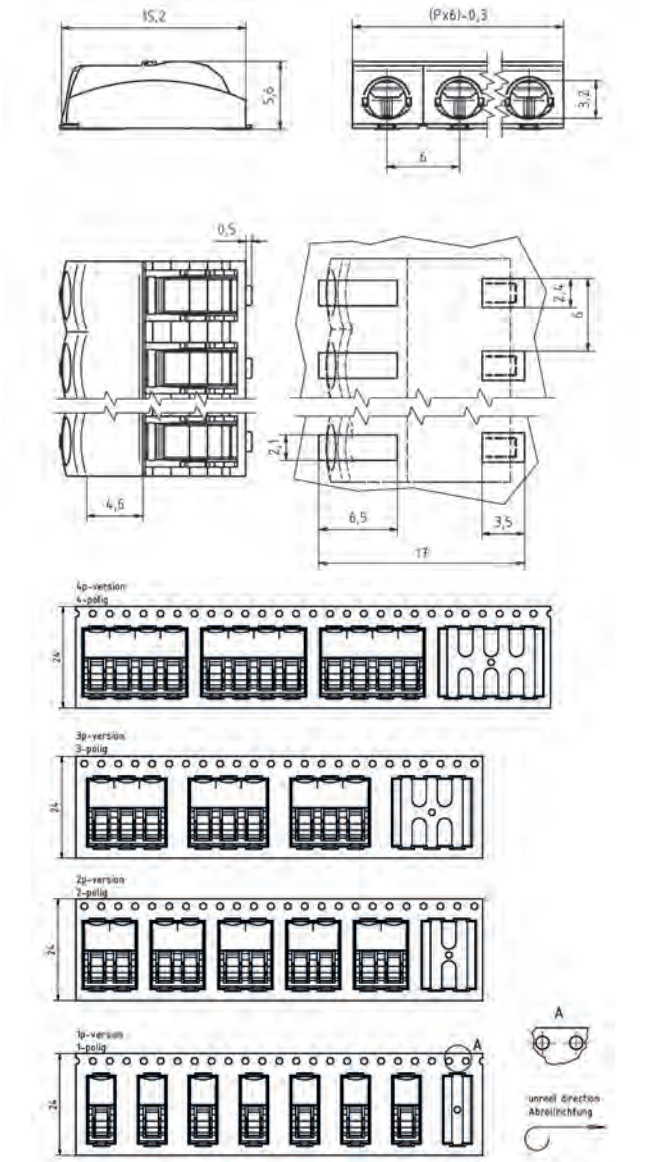

COLOURS[1]	
▭	WHITE, RAL 9003

TAPE-ON-REEL				
Poles	Reel (RD/")	Width (R/mm)	Pitch (RP/mm)	Pieces (PCS)
1	13	24	12	900
2	13	24	16	750
3	13	24	24	450
4	13	24	28	380

ORDER DATA (SPACING 6.0 MM)				
Poles	Width (mm)	Article Designation	Article Number	PU
1	5.70	AK4092/1KD-6.0-WH-SMD	54092019001R	900
2	11.70	AK4092/2KD-6.0-WH-SMD	54092029001R	750
3	17.70	AK4092/3KD-6.0-WH-SMD	54092039001R	450
4	23.70	AK4092/4KD-6.0-WH-SMD	54092049001R	380

RATINGS	
Rated Voltage (1 pole)	600 V
Rated Current (2 pole)	300 V
Nennstrom	10 A
Rated Wire Size	
solid	AWG 20-16
stranded	AWG 20-16
Test Voltage	-

*Approval Pending

RATINGS						
Overvoltage Category	II		III		III	
Pollution Degree	2		2		3	
Rated Voltage	630 V		320 V		250 V	
Rated Current	17.5 A		17.5 A		17.5 A	
Rated Wire Size	min	max	min	max	min	max
solid (mm²)	0.5	1.5	0.5	1.5	0.5	1.5
stranded (mm²)	0.5	1.5	0.5	1.5	0.5	1.5
Test Voltage	4.0 kV		4.0 kV		4.0 kV	

*Approval Pending

[1]Colours according to RAL, there may be variations on colour due to production conditions.

L'IMPULSION
Retrouvez nous sur
www.limpulsion.fr

AKZ4801/..KD-6.35-V-BLACK-HT

Spacing 6.35 mm



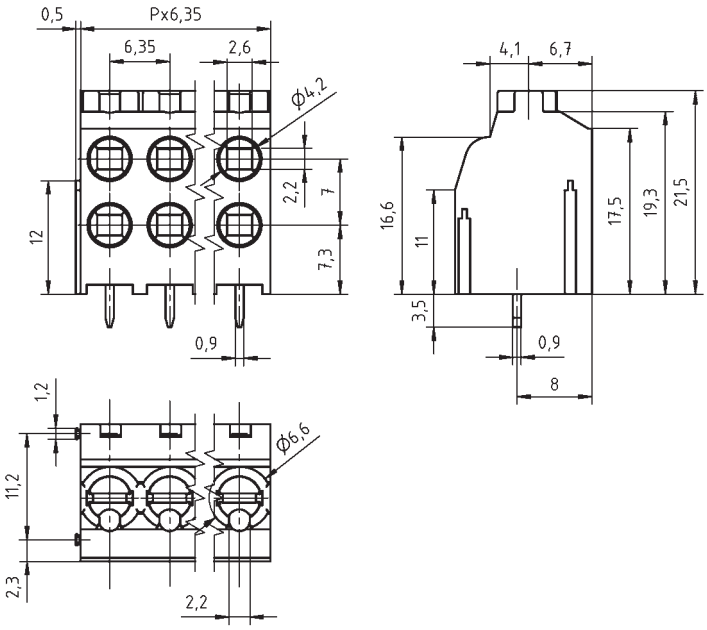

WIRE SIZES	
solid min	0.2 mm²
solid max	2.5 mm²
stranded min	0.2 mm²
stranded max	2.5 mm²
stranded with ferrule min	0.25 mm²
stranded with ferrule max	2.5 mm²
DIMENSIONS	
Stripped Length	9.0 mm
PCB Hole Diameter	1.3 mm
MATERIALS	
Clamp	Zinc Die-Cast
Solder Tab	Brass
Clamp Spring	Stainless Steel
INSULATING MATERIAL	
Material	PPA
Flammability Class	UL 94 V-0
TEMPERATURES	
Operating Temperature (without mech. load)	-40 °C - 105 °C
WAVE SOLDERING PROCESS	
Soldering Temperature, recommended	260 °C
Peak Soldering Time, recommended	3-4 s
REFLOW PROCESS	
Soldering Temperature, recommended	217 °C - 245 °C
Peak Soldering Time, recommended	60 s

COLOURS[1]
BLACK, RAL 9011

ORDER DATA (SPACING 6.35 MM)

Poles	Width (mm)	Article Designation	Article Number	PU
2	13.20	AKZ4801/2KD-6.35-V-BLACK-HT	54801020301E	100
3	19.55	AKZ4801/3KD-6.35-V-BLACK-HT	54801030301E	100
4	25.90	AKZ4801/4KD-6.35-V-BLACK-HT	54801040301D	50
5	32.25	AKZ4801/5KD-6.35-V-BLACK-HT	54801050301D	50
6	38.60	AKZ4801/6KD-6.35-V-BLACK-HT	54801060301D	50
7	44.95	AKZ4801/7KD-6.35-V-BLACK-HT	54801070301D	50
8	51.30	AKZ4801/8KD-6.35-V-BLACK-HT	54801080301D	50
9	57.65	AKZ4801/9KD-6.35-V-BLACK-HT	54801090301D	50
10	64.00	AKZ4801/10KD-6.35-V-BLACK-HT	54801100301D	50
11	70.35	AKZ4801/11KD-6.35-V-BLACK-HT	54801110301D	50
12	76.70	AKZ4801/12KD-6.35-V-BLACK-HT	54801120301D	50

RATINGS	c UL us			VDE	
Usegroup	B	C	D		
Rated Voltage	300 V	-	300 V	400 V	
Rated Current	12 A	-	10 A	12 A	
Rated Wire Size				min	max
solid	AWG 24-14	-	AWG 24-14	0.2 mm²	2.5 mm²
stranded	AWG 24-14	-	AWG 24-14	0.2 mm²	2.5 mm²
Test Voltage	1.6 kV	-	1.6 kV	2.5 kV	

[1]Colours according to RAL, there may be variations on colour due to production conditions.

Spacing 6.35 mm

AKZ4841/..KD-6.35-OL-BLACK-HT

WIRE SIZES	
solid min	0.2 mm²
solid max	2.5 mm²
stranded min	0.2 mm²
stranded max	2.5 mm²
stranded with ferrule min	0.25 mm²
stranded with ferrule max	2.5 mm²
DIMENSIONS	
Stripped Length	9.0 mm
PCB Hole Diameter	1.3 mm
MATERIALS	
Clamp	Zinc Die-Cast
Solder Tab	Brass
Clamp Spring	Stainless Steel
INSULATING MATERIAL	
Material	PPA
Flammability Class	UL 94 V-0
TEMPERATURES	
Operating Temperature (without mech. load)	-40 °C - 105 °C
WAVE SOLDERING PROCESS	
Soldering Temperature, recommended	260 °C
Peak Soldering Time, recommended	3-4 s
REFLOW PROCESS	
Soldering Temperature, recommended	217 °C - 245 °C
Peak Soldering Time, recommended	60 s



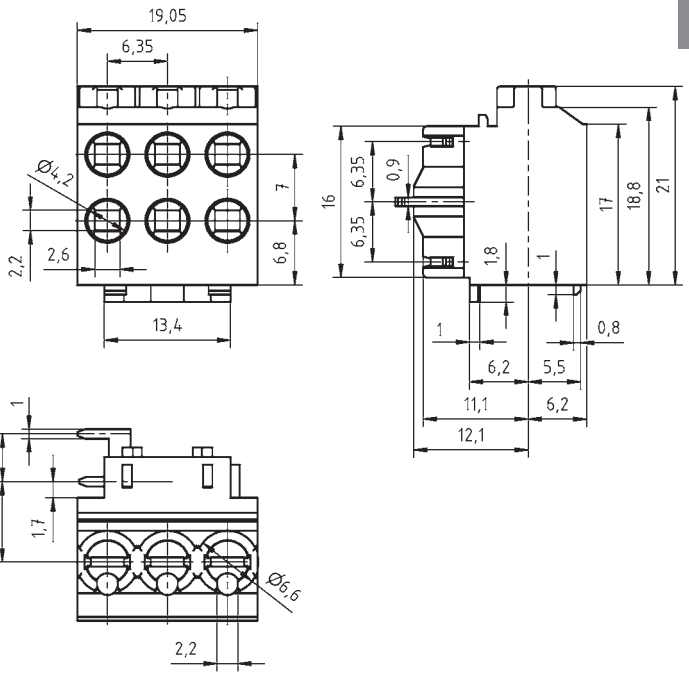

COLOURS[1]	
	BLACK, RAL 9011

ORDER DATA (SPACING 6.35 MM)				
Poles	Width (mm)	Article Designation	Article Number	PU
3	19.05	AKZ4841/3KD-6.35-OL-BLACK-HT	54841030361D	50

RATINGS	cULus		VDE	
Usegroup	B	C	D	
Rated Voltage	300 V	-	300 V	400 V
Rated Current	12 A	-	10 A	12 A
Rated Wire Size			min	max
solid	AWG 24-14	-	AWG 24-14	0.2 mm²	2.5 mm²
stranded	AWG 24-14	-	AWG 24-14	0.2 mm²	2.5 mm²
Test Voltage	1.6 kV	-	1.6 kV	2.5 kV	

[1]Colours according to RAL, there may be variations on colour due to production conditions.

L'IMPULSION
Retrouvez nous sur
www.limpulsion.fr

AKZ4841/..KD-6.35-OR-BLACK-HT

Spacing 6.35 mm



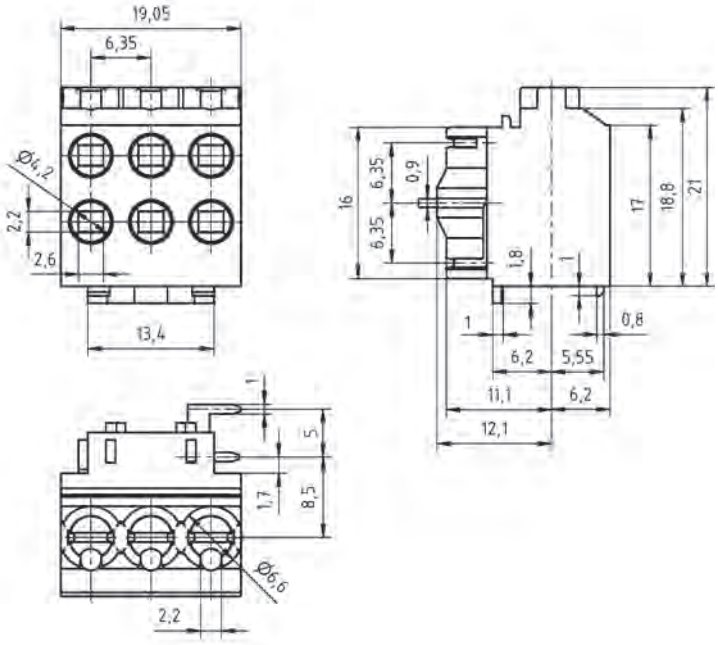

WIRE SIZES	
solid min	0.2 mm²
solid max	2.5 mm²
stranded min	0.2 mm²
stranded max	2.5 mm²
stranded with ferrule min	0.25 mm²
stranded with ferrule max	2.5 mm²
DIMENSIONS	
Stripped Length	9.0 mm
PCB Hole Diameter	1.3 mm
MATERIALS	
Clamp	Zinc Die-Cast
Solder Tab	Brass
Clamp Spring	Stainless Steel
INSULATING MATERIAL	
Material	PPA
Flammability Class	UL 94 V-0
TEMPERATURES	
Operating Temperature (without mech. load)	-40 °C - 105 °C
WAVE SOLDERING PROCESS	
Soldering Temperature, recommended	260 °C
Peak Soldering Time, recommended	3-4 s
REFLOW PROCESS	
Soldering Temperature, recommended	217 °C - 245 °C
Peak Soldering Time, recommended	60 s

COLOURS[1]	
■	BLACK, RAL 9011

ORDER DATA (SPACING 6.35 MM)

Poles	Width (mm)	Article Designation	Article Number	PU
3	19.05	AKZ4841/3KD-6.35-OR-BLACK-HT	54841030371D	50

RATINGS	c UL us			VDE	
Usegroup	B	C	D		
Rated Voltage	300 V	-	300 V	400 V	
Rated Current	12 A	-	10 A	12 A	
Rated Wire Size				min	max
solid	AWG 24-14	-	AWG 24-14	0.2 mm²	2.5 mm²
stranded	AWG 24-14	-	AWG 24-14	0.2 mm²	2.5 mm²
Test Voltage	1.6 kV	-	1.6 kV	2.5 kV	

[1]Colours according to RAL, there may be variations on colour due to production conditions.

Spacing 7.5 mm
2- to n-poles

AK4200/..-7.5-V-baGY



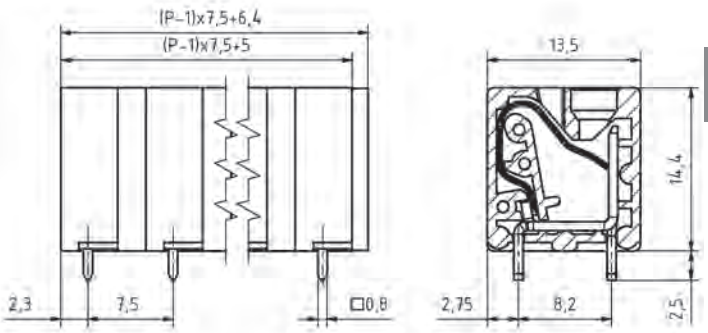

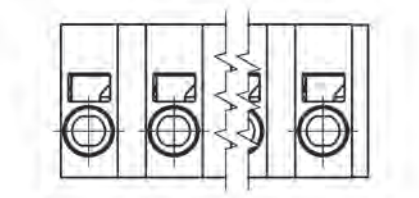

WIRE SIZES	
solid min	0.2 mm²
solid max	4.0 mm²
stranded min	0.2 mm²
stranded max	2.5 mm²
stranded with ferrule min	0.2 mm²
stranded with ferrule max	2.5 mm²
DIMENSIONS	
Stripped Length	10.0 mm
PCB Hole Diameter	1.1 mm
MATERIALS	
Solder Tab	Copper Alloy
Clamp Spring	Stainless Steel
INSULATING MATERIAL	
Material	PA 6.6
Flammability Class	UL 94 V-0
TEMPERATURES	
Operating Temperature (without mech. load)	-40 °C - 105 °C
WAVE SOLDERING PROCESS	
Soldering Temperature, recommended	260 °C
Peak Soldering Time, recommended	3-4 s
REFLOW PROCESS	
Soldering Temperature, recommended	-
Peak Soldering Time, recommended	-

COLOURS[1]

BASALT GREY, RAL 7012		LIGHT GREY, RAL 7035	
TRAFFIC GREY, RAL 7042		BLACK, RAL 9011	
LIGHT GREEN, similar RAL 6018		GREEN, RAL 6018	
GREEN/YELLOW, RAL 6018 - 1018/S		RED, RAL 3003	
ORANGE, RAL 2011		BLUE, RAL 5015	
WHITE, RAL 9003			

ORDER DATA (SPACING 7.5 MM)

Poles	Width (mm)	Article Designation	Article Number	PU
2	13.90	AK4200/2-7.5-V-baGY	54200020521D	50
3	21.40	AK4200/3-7.5-V-baGY	54200030521D	50
4	28.90	AK4200/4-7.5-V-baGY	54200040521D	50
5	36.40	AK4200/5-7.5-V-baGY	54200050521D	50
6	43.90	AK4200/6-7.5-V-baGY	54200060521D	50
7	51.40	AK4200/7-7.5-V-baGY	54200070521D	50
8	58.90	AK4200/8-7.5-V-baGY	54200080521D	50
9	66.40	AK4200/9-7.5-V-baGY	54200090521D	50
10	73.90	AK4200/10-7.5-V-baGY	54200100521D	50
11	81.40	AK4200/11-7.5-V-baGY	54200110521D	50
12	88.90	AK4200/12-7.5-V-baGY	54200120521D	50

ACCESSORIES

	Description	Article Number
	Spacer SPC-AK4200-baGY	54200000000
	Side Wall with Coding Pin SW-AK4200-CP-V-baGY	54200000001

RATINGS

	c UL us			VDE	
Usegroup	B	C	D		
Rated Voltage	300 V	150 V	300 V	250 V	
Rated Current	20 A	20 A	10 A	24 A	
Overvoltage Category				III	
Rated Wire Size				min	max
solid	AWG 24-12	AWG 24-12	AWG 24-12	0.2 mm²	2.5 mm²
stranded	AWG 24-12	AWG 24-12	AWG 24-12	0.2 mm²	2.5 mm²
Test Voltage	1.6 kV	1.3 kV	1.6 kV	3.0 kV	

[1]Colours according to RAL, there may be variations on colour due to production conditions. Special colours on request.

L'IMPULSION
Retrouvez nous sur
www.limpulsion.fr

AK4200/..-7.5-H-baGY

Spacing 7.5 mm
2- to n-poles



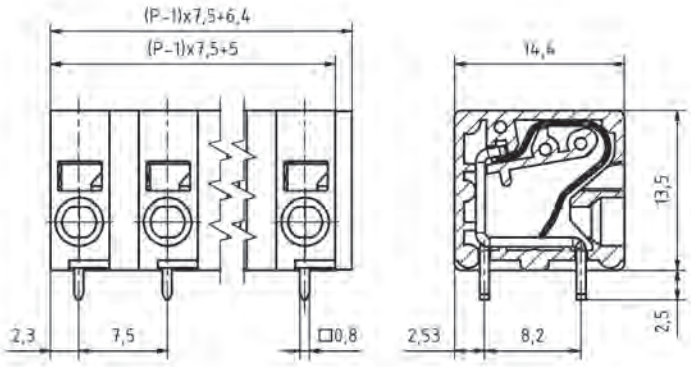

WIRE SIZES	
solid min	0.2 mm²
solid max	4.0 mm²
stranded min	0.2 mm²
stranded max	2.5 mm²
stranded with ferrule min	0.2 mm²
stranded with ferrule max	2.5 mm²
DIMENSIONS	
Stripped Length	10.0 mm
PCB Hole Diameter	1.1 mm
MATERIALS	
Solder Tab	Copper Alloy
Clamp Spring	Stainless Steel
INSULATING MATERIAL	
Material	PA 6.6
Flammability Class	UL 94 V-0
TEMPERATURES	
Operating Temperature (without mech. load)	-40 °C - 105 °C
WAVE SOLDERING PROCESS	
Soldering Temperature, recommended	260 °C
Peak Soldering Time, recommended	3-4 s
REFLOW PROCESS	
Soldering Temperature, recommended	-
Peak Soldering Time, recommended	-

COLOURS[1]

	BASALT GREY, RAL 7012		LIGHT GREY, RAL 7035
	TRAFFIC GREY, RAL 7042		BLACK, RAL 9011
	LIGHT GREEN, similar RAL 6018		GREEN, RAL 6018
	GREEN/YELLOW, RAL 6018 - 1018/S		RED, RAL 3003
	ORANGE, RAL 2011		BLUE, RAL 5015
	WHITE, RAL 9003		

ACCESSORIES

	Description	Article Number
	Spacer SPC-AK4200-baGY	54200000000
	Side Wall with Coding Pin SW-AK4200-CP-H-baGY	54200000002

ORDER DATA (SPACING 7.5 MM)

Poles	Width (mm)	Article Designation	Article Number	PU
2	13.90	AK4200/2-7.5-H-baGY	54200020551D	50
3	21.40	AK4200/3-7.5-H-baGY	54200030551D	50
4	28.90	AK4200/4-7.5-H-baGY	54200040551D	50
5	36.40	AK4200/5-7.5-H-baGY	54200050551D	50
6	43.90	AK4200/6-7.5-H-baGY	54200060551D	50
7	51.40	AK4200/7-7.5-H-baGY	54200070551D	50
8	58.90	AK4200/8-7.5-H-baGY	54200080551D	50
9	66.40	AK4200/9-7.5-H-baGY	54200090551D	50
10	73.90	AK4200/10-7.5-H-baGY	54200100551D	50
11	81.40	AK4200/11-7.5-H-baGY	54200110551D	50
12	88.90	AK4200/12-7.5-H-baGY	54200120551D	50

RATINGS

	cULus			VDE	
Usegroup	B	C	D		
Rated Voltage	300 V	150 V	300 V	250 V	
Rated Current	20 A	20 A	10 A	24 A	
Overvoltage Category				III	
Rated Wire Size				min	max
solid	AWG 24-12	AWG 24-12	AWG 24-12	0.2 mm²	2.5 mm²
stranded	AWG 24-12	AWG 24-12	AWG 24-12	0.2 mm²	2.5 mm²
Test Voltage	1.6 kV	1.3 kV	1.6 kV	3.0 kV	

[1]Colours according to RAL, there may be variations on colour due to production conditions. Special colours on request.

Spacing 7.5 mm
1- to n-poles

AK4210/..-7.5-V-baGY

WIRE SIZES	
solid min	0.2 mm²
solid max	10.0 mm²
stranded min	0.2 mm²
stranded max	6.0 mm²
stranded with ferrule min	0.25 mm²
stranded with ferrule max	6.0 mm²
DIMENSIONS	
Stripped Length	15.0 mm
PCB Hole Diameter	2.1 mm
MATERIALS	
Solder Tab	Copper Alloy
Clamp Spring	Stainless Steel
INSULATING MATERIAL	
Material	PA 6.6
Flammability Class	UL 94 V-0
TEMPERATURES	
Operating Temperature (without mech. load)	-40 °C - 105 °C
WAVE SOLDERING PROCESS	
Soldering Temperature, recommended	260 °C
Peak Soldering Time, recommended	3-4 s
REFLOW PROCESS	
Soldering Temperature, recommended	-
Peak Soldering Time, recommended	-



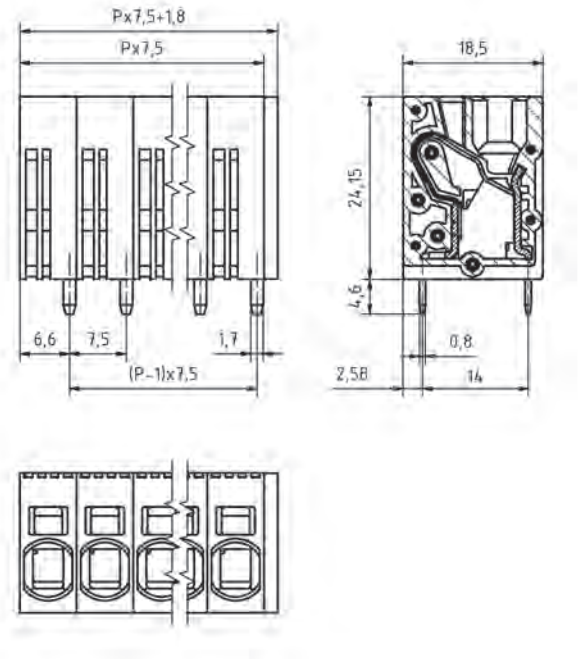

COLOURS[1]

	BASALT GREY, RAL 7012		TRAFFIC GREY, RAL 7042
	BLACK, RAL 9011		LIGHT GREEN, similar RAL 6018
	GREEN, RAL 6018		GREEN/YELLOW, RAL 6018 - 1018/S
	BLUE, RAL 5015		

ORDER DATA (SPACING 7.5 MM)

Poles	Width (mm)	Article Designation	Article Number	PU
1	9.25	AK4210/1-7.5-V-baGY	54210010521E	100
2	16.75	AK4210/2-7.5-V-baGY	54210020521D	50
3	24.25	AK4210/3-7.5-V-baGY	54210030521D	50
4	31.75	AK4210/4-7.5-V-baGY	54210040521D	50
5	39.25	AK4210/5-7.5-V-baGY	54210050521D	50
6	46.75	AK4210/6-7.5-V-baGY	54210060521D	50
7	54.25	AK4210/7-7.5-V-baGY	54210070521D	50
8	61.75	AK4210/8-7.5-V-baGY	54210080521D	50
9	69.25	AK4210/9-7.5-V-baGY	54210090521D	50
10	76.75	AK4210/10-7.5-V-baGY	54210100521D	50
11	84.25	AK4210/11-7.5-V-baGY	54210110521D	50
12	91.75	AK4210/12-7.5-V-baGY	54210120521D	50

ACCESSORIES

	Description	Article Number
	Spacer SPC-AK4210-V-baGY	54210000001

RATINGS

	cULus			VDE	
Usegroup	B	C	D		
Rated Voltage	300 V	300 V	300 V	450 V	
Rated Current	35 A	35 A	10 A	41 A	
Overvoltage Category				III	
Rated Wire Size				min	max
solid	AWG 24-8	AWG 24-8	AWG 24-8	0.2 mm²	10.0 mm²
stranded	AWG 24-8	AWG 24-8	AWG 24-8	0.2 mm²	6.0 mm²
Test Voltage	1.6 kV	1.6 kV	1.6 kV	2.5 kV	

[1]Colours according to RAL, there may be variations on colour due to production conditions. Special colours on request.

L'IMPULSION
Retrouvez nous sur
www.limpulsion.fr

AK4210/..VP-7.5-V-baGY

Spacing 7.5 mm
2- to n-poles



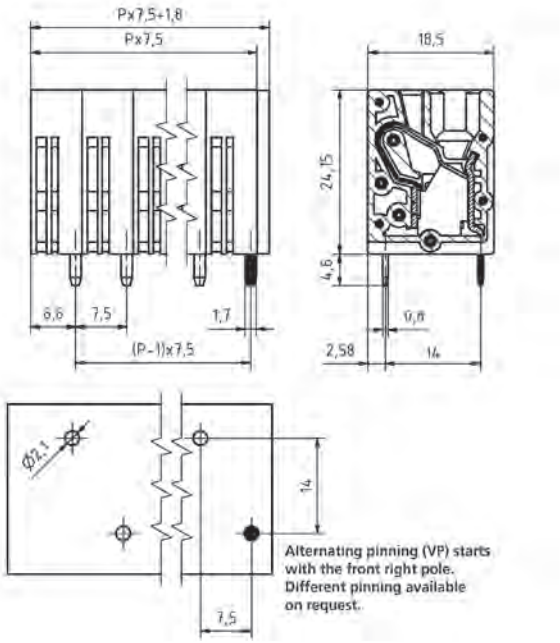

WIRE SIZES	
solid min	0.2 mm²
solid max	10.0 mm²
stranded min	0.2 mm²
stranded max	6.0 mm²
stranded with ferrule min	0.25 mm²
stranded with ferrule max	6.0 mm²
DIMENSIONS	
Stripped Length	15.0 mm
PCB Hole Diameter	2.1 mm
MATERIALS	
Solder Tab	Copper Alloy
Clamp Spring	Stainless Steel
INSULATING MATERIAL	
Material	PA 6.6
Flammability Class	UL 94 V-0
TEMPERATURES	
Operating Temperature (without mech. load)	-40 °C - 105 °C
WAVE SOLDERING PROCESS	
Soldering Temperature, recommended	260 °C
Peak Soldering Time, recommended	3-4 s
REFLOW PROCESS	
Soldering Temperature, recommended	-
Peak Soldering Time, recommended	-

COLOURS[1]

	BASALT GREY, RAL 7012		TRAFFIC GREY, RAL 7042
	BLACK, RAL 9011		LIGHT GREEN, similar RAL 6018
	GREEN, RAL 6018		GREEN/YELLOW, RAL 6018 - 1018/S
	BLUE, RAL 5015		

ACCESSORIES

	Description	Article Number
	Spacer SPC-AK4210-V-baGY	54210000001

ORDER DATA (SPACING 7.5 MM)

Poles	Width (mm)	Article Designation	Article Number	PU
2	16.75	AK4210/2VP-7.5-V-baGY	54210020527D	50
3	24.25	AK4210/3VP-7.5-V-baGY	54210030527D	50
4	31.75	AK4210/4VP-7.5-V-baGY	54210040527D	50
5	39.25	AK4210/5VP-7.5-V-baGY	54210050527D	50
6	46.75	AK4210/6VP-7.5-V-baGY	54210060527D	50
7	54.25	AK4210/7VP-7.5-V-baGY	54210070527D	50
8	61.75	AK4210/8VP-7.5-V-baGY	54210080527D	50
9	69.25	AK4210/9VP-7.5-V-baGY	54210090527D	50
10	76.75	AK4210/10VP-7.5-V-baGY	54210100527D	50
11	84.25	AK4210/11VP-7.5-V-baGY	54210110527D	50
12	91.75	AK4210/12VP-7.5-V-baGY	54210120527D	50

RATINGS

	c UL us			VDE	
Usegroup	B	C	D		
Rated Voltage	600 V	600 V	600 V	1.000 V	
Rated Current	35 A	35 A	5 A	41 A	
Overvoltage Category				III	
Rated Wire Size				min	max
solid	AWG 24-8	AWG 24-8	AWG 24-8	0.2 mm²	10.0 mm²
stranded	AWG 24-8	AWG 24-8	AWG 24-8	0.2 mm²	6.0 mm²
Test Voltage	2.2 kV	2.2 kV	2.2 kV	3.5 kV	

[1]Colours according to RAL, there may be variations on colour due to production conditions. Special colours on request.

Spacing 7.5 mm
1- to n-poles

AK4210/..-7.5-H-baGY

WIRE SIZES	
solid min	0.2 mm²
solid max	10.0 mm²
stranded min	0.2 mm²
stranded max	6.0 mm²
stranded with ferrule min	0.25 mm²
stranded with ferrule max	6.0 mm²
DIMENSIONS	
Stripped Length	15.0 mm
PCB Hole Diameter	2.1 mm
MATERIALS	
Solder Tab	Copper Alloy
Clamp Spring	Stainless Steel
INSULATING MATERIAL	
Material	PA 6.6
Flammability Class	UL 94 V-0
TEMPERATURES	
Operating Temperature (without mech. load)	-40 °C - 105 °C
WAVE SOLDERING PROCESS	
Soldering Temperature, recommended	260 °C
Peak Soldering Time, recommended	3-4 s
REFLOW PROCESS	
Soldering Temperature, recommended	-
Peak Soldering Time, recommended	-



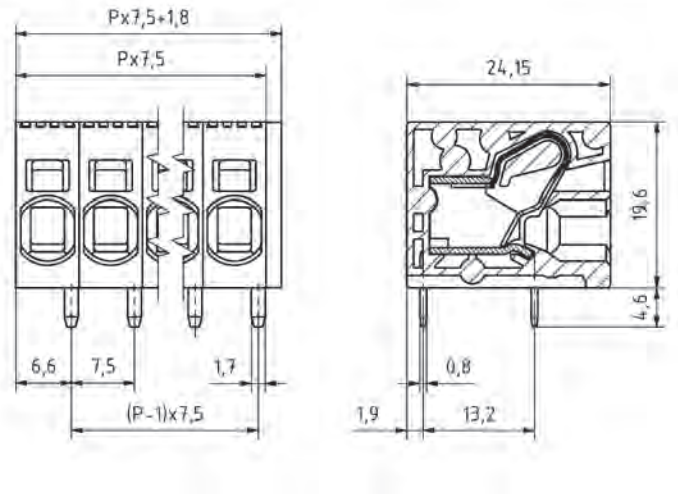

COLOURS[1]

	BASALT GREY, RAL 7012		BLACK, RAL 9011
	LIGHT GREEN, similar RAL 6018		GREEN, RAL 6018
	BLUE, RAL 5015		

ORDER DATA (SPACING 7.5 MM)

Poles	Width (mm)	Article Designation	Article Number	PU
1	9.25	AK4210/1-7.5-H-baGY	54210010551E	100
2	16.75	AK4210/2-7.5-H-baGY	54210020551D	50
3	24.25	AK4210/3-7.5-H-baGY	54210030551D	50
4	31.75	AK4210/4-7.5-H-baGY	54210040551D	50
5	39.25	AK4210/5-7.5-H-baGY	54210050551D	50
6	46.75	AK4210/6-7.5-H-baGY	54210060551D	50
7	54.25	AK4210/7-7.5-H-baGY	54210070551D	50
8	61.75	AK4210/8-7.5-H-baGY	54210080551D	50
9	69.25	AK4210/9-7.5-H-baGY	54210090551D	50
10	76.75	AK4210/10-7.5-H-baGY	54210100551D	50
11	84.25	AK4210/11-7.5-H-baGY	54210110551D	50
12	91.75	AK4210/12-7.5-H-baGY	54210120551D	50

ACCESSORIES

	Description	Article Number
	Spacer SPC-AK4210-H-baGY	54210000000

RATINGS

	cULus			VDE	
Usegroup	B	C	D		
Rated Voltage	300 V	300 V	300 V	450 V	
Rated Current	35 A	35 A	10 A	41 A	
Overvoltage Category				III	
Rated Wire Size				min	max
solid	AWG 24-8	AWG 24-8	AWG 24-8	0.2 mm²	10.0 mm²
stranded	AWG 24-8	AWG 24-8	AWG 24-8	0.2 mm²	6.0 mm²
Test Voltage	1.6 kV	1.6 kV	1.6 kV	2.5 kV	

[1]Colours according to RAL, there may be variations on colour due to production conditions. Special colours on request.

L'IMPULSION
Retrouvez nous sur
www.limpulsion.fr

AK4210/..VP-7.5-H-baGY

Spacing 7.5 mm
2- to n-poles



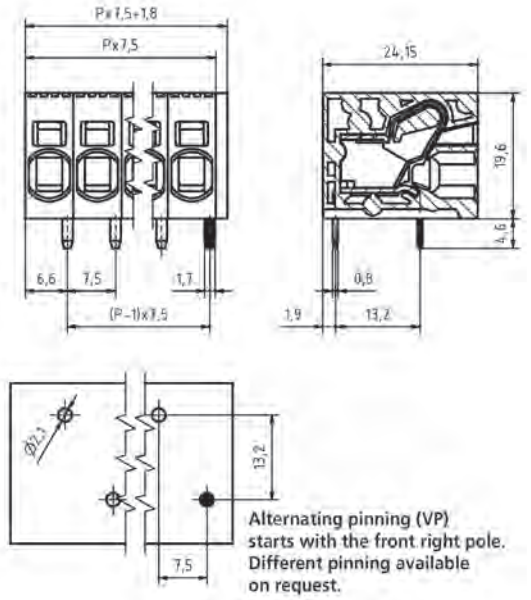

WIRE SIZES	
solid min	0.2 mm²
solid max	10.0 mm²
stranded min	0.2 mm²
stranded max	6.0 mm²
stranded with ferrule min	0.25 mm²
stranded with ferrule max	6.0 mm²
DIMENSIONS	
Stripped Length	15.0 mm
PCB Hole Diameter	2.1 mm
MATERIALS	
Solder Tab	Copper Alloy
Clamp Spring	Stainless Steel
INSULATING MATERIAL	
Material	PA 6.6
Flammability Class	UL 94 V-0
TEMPERATURES	
Operating Temperature (without mech. load)	-40 °C - 105 °C
WAVE SOLDERING PROCESS	
Soldering Temperature, recommended	260 °C
Peak Soldering Time, recommended	3-4 s
REFLOW PROCESS	
Soldering Temperature, recommended	-
Peak Soldering Time, recommended	-

COLOURS[1]

	BASALT GREY, RAL 7012		BLACK, RAL 9011
	LIGHT GREEN, similar RAL 6018		GREEN, RAL 6018
	BLUE, RAL 5015		

ACCESSORIES

	Description	Article Number
	Spacer SPC-AK4210-H-baGY	54210000000

ORDER DATA (SPACING 7.5 MM)

Poles	Width (mm)	Article Designation	Article Number	PU
2	16.75	AK4210/2VP-7.5-H-baGY	54210020407D	50
3	24.25	AK4210/3VP-7.5-H-baGY	54210030407D	50
4	31.75	AK4210/4VP-7.5-H-baGY	54210040407D	50
5	39.25	AK4210/5VP-7.5-H-baGY	54210050407D	50
6	46.75	AK4210/6VP-7.5-H-baGY	54210060407D	50
7	54.25	AK4210/7VP-7.5-H-baGY	54210070407D	50
8	61.75	AK4210/8VP-7.5-H-baGY	54210080407D	50
9	69.25	AK4210/9VP-7.5-H-baGY	54210090407D	50
10	76.75	AK4210/10VP-7.5-H-baGY	54210100407D	50
11	84.25	AK4210/11VP-7.5-H-baGY	54210110407D	50
12	91.75	AK4210/12VP-7.5-H-baGY	54210120407D	50

RATINGS

	c UL us			VDE	
Usegroup	B	C	D		
Rated Voltage	600 V	600 V	600 V	1.000 V	
Rated Current	35 A	35 A	5 A	41 A	
Overvoltage Category				III	
Rated Wire Size				min	max
solid	AWG 24-8	AWG 24-8	AWG 24-8	0.2 mm²	10.0 mm²
stranded	AWG 24-8	AWG 24-8	AWG 24-8	0.2 mm²	6.0 mm²
Test Voltage	2.2 kV	2.2 kV	2.2 kV	3.5 kV	

[1]Colours according to RAL, there may be variations on colour due to production conditions. Special colours on request.

Spacing 11.5 mm
2- to n-poles

AK4210/..-11.5-V-baGY

WIRE SIZES	
solid min	0.2 mm²
solid max	10.0 mm²
stranded min	0.2 mm²
stranded max	6.0 mm²
stranded with ferrule min	0.25 mm²
stranded with ferrule max	6.0 mm²
DIMENSIONS	
Stripped Length	15.0 mm
PCB Hole Diameter	2.1 mm
MATERIALS	
Solder Tab	Copper Alloy
Clamp Spring	Stainless Steel
INSULATING MATERIAL	
Material	PA 6.6
Flammability Class	UL 94 V-0
TEMPERATURES	
Operating Temperature (without mech. load)	-40 °C - 105 °C
WAVE SOLDERING PROCESS	
Soldering Temperature, recommended	260 °C
Peak Soldering Time, recommended	3-4 s
REFLOW PROCESS	
Soldering Temperature, recommended	-
Peak Soldering Time, recommended	-



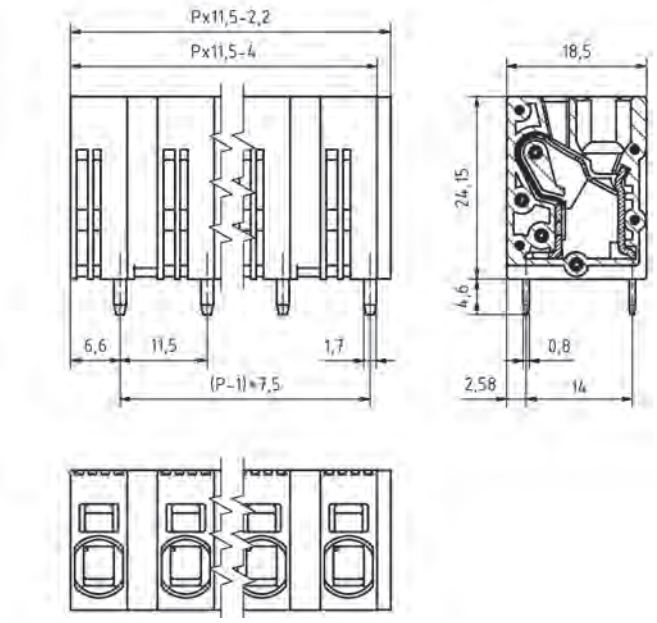

COLOURS[1]

	BASALT GREY, RAL 7012		TRAFFIC GREY, RAL 7042
	BLACK, RAL 9011		LIGHT GREEN, similar RAL 6018
	GREEN, RAL 6018		BLUE, RAL 5015

ORDER DATA (SPACING 11.5 MM)

Poles	Width (mm)	Article Designation	Article Number	PU
2	20.75	AK4210/2-11.5-V-baGY	54210020523D	50
3	32.25	AK4210/3-11.5-V-baGY	54210030523D	50
4	43.75	AK4210/4-11.5-V-baGY	54210040523D	50
5	55.25	AK4210/5-11.5-V-baGY	54210050523D	50
6	66.75	AK4210/6-11.5-V-baGY	54210060523D	50
7	78.25	AK4210/7-11.5-V-baGY	54210070523D	50
8	89.75	AK4210/8-11.5-V-baGY	54210080523D	50
9	101.25	AK4210/9-11.5-V-baGY	54210090523D	50
10	112.75	AK4210/10-11.5-V-baGY	54210100523D	50
11	124.25	AK4210/11-11.5-V-baGY	54210110523D	50
12	135.75	AK4210/12-11.5-V-baGY	54210120523D	50

ACCESSORIES

	Description	Article Number
	Spacer SPC-AK4210-V-baGY	54210000001

RATINGS

	cULus			VDE	
Usegroup	B	C	D		
Rated Voltage	600 V	600 V	600 V	450 V	
Rated Current	35 A	35 A	5 A	41 A	
Overvoltage Category				III	
Rated Wire Size				min	max
solid	AWG 24-8	AWG 24-8	AWG 24-8	0.2 mm²	10.0 mm²
stranded	AWG 24-8	AWG 24-8	AWG 24-8	0.2 mm²	6.0 mm²
Test Voltage	2.2 kV	2.2 kV	2.2 kV	3.5 kV	

[1]Colours according to RAL, there may be variations on colour due to production conditions. Special colours on request.

L'IMPULSION
Retrouvez nous sur
www.limpulsion.fr

AK4210/..-11.5-H-baGY

Spacing 11.5 mm
2- to n-poles



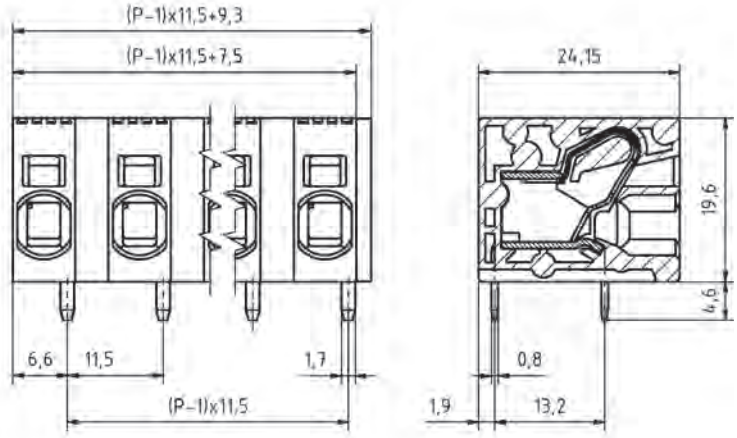

WIRE SIZES	
solid min	0.2 mm²
solid max	10.0 mm²
stranded min	0.2 mm²
stranded max	6.0 mm²
stranded with ferrule min	0.25 mm²
stranded with ferrule max	6.0 mm²
DIMENSIONS	
Stripped Length	15.0 mm
PCB Hole Diameter	2.1 mm
MATERIALS	
Solder Tab	Copper Alloy
Clamp Spring	Stainless Steel
INSULATING MATERIAL	
Material	PA 6.6
Flammability Class	UL 94 V-0
TEMPERATURES	
Operating Temperature (without mech. load)	-40 °C - 105 °C
WAVE SOLDERING PROCESS	
Soldering Temperature, recommended	260 °C
Peak Soldering Time, recommended	3-4 s
REFLOW PROCESS	
Soldering Temperature, recommended	-
Peak Soldering Time, recommended	-

COLOURS[1]

	BASALT GREY, RAL 7012		BLACK, RAL 9011
	LIGHT GREEN, similar RAL 6018		GREEN, RAL 6018
	BLUE, RAL 5015		

ACCESSORIES

	Description	Article Number
	Spacer SPC-AK4210-H-baGY	54210000000

ORDER DATA (SPACING 11.5 MM)

Poles	Width (mm)	Article Designation	Article Number	PU
2	20.75	AK4210/2-11.5-H-baGY	54210020651D	50
3	32.25	AK4210/3-11.5-H-baGY	54210030651D	50
4	43.75	AK4210/4-11.5-H-baGY	54210040651D	50
5	55.25	AK4210/5-11.5-H-baGY	54210050651D	50
6	66.75	AK4210/6-11.5-H-baGY	54210060651D	50
7	78.25	AK4210/7-11.5-H-baGY	54210070651D	50
8	89.75	AK4210/8-11.5-H-baGY	54210080651D	50
9	101.25	AK4210/9-11.5-H-baGY	54210090651D	50
10	112.75	AK4210/10-11.5-H-baGY	54210100651D	50
11	124.25	AK4210/11-11.5-H-baGY	54210110651D	50
12	135.75	AK4210/12-11.5-H-baGY	54210120651D	50

RATINGS

	c UL us			VDE	
Usegroup	B	C	D		
Rated Voltage	600 V	600 V	600 V	450 V	
Rated Current	35 A	35 A	5 A	41 A	
Overvoltage Category				III	
Rated Wire Size				min	max
solid	AWG 24-8	AWG 24-8	AWG 24-8	0.2 mm²	10.0 mm²
stranded	AWG 24-8	AWG 24-8	AWG 24-8	0.2 mm²	6.0 mm²
Test Voltage	2.2 kV	2.2 kV	2.2 kV	3.5 kV	

[1]Colours according to RAL, there may be variations on colour due to production conditions. Special colours on request.

Spacing 2.5 mm / Spacing 2.54 mm
1- to n-poles

AK3191/..-2.5-PEBBLE GREY
AKZ3191/..-2.54-ORANGE



WIRE SIZES	
solid min	0.08 mm²
solid max	1.0 mm²
stranded min	0.14 mm²
stranded max	0.5 mm²
stranded with ferrule min	0.14 mm²
stranded with ferrule max	0.14 mm²
DIMENSIONS	
Stripped Length	5.0 mm
PCB Hole Diameter	1.1 mm
MATERIALS	
Solder Tab	Copper Alloy
Tension Spring	Stainless Steel
INSULATING MATERIAL	
Material	PA 6.6
Flammability Class	UL 94 V-0
TEMPERATURES	
Operating Temperature (without mech. load)	-40 °C - 105 °C
WAVE SOLDERING PROCESS	
Soldering Temperature, recommended	260 °C
Peak Soldering Time, recommended	3-4 s
REFLOW PROCESS	
Soldering Temperature, recommended	-
Peak Soldering Time, recommended	-

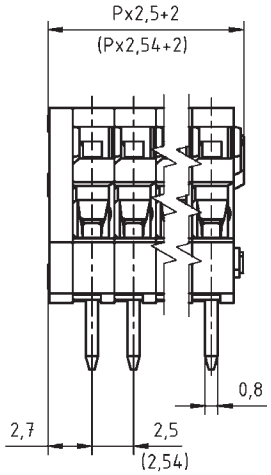

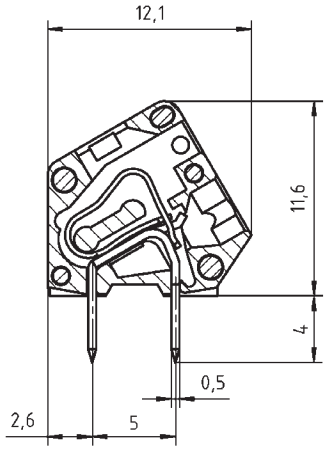

COLOURS[1]

PEBBLE GREY, RAL 7032 ORANGE, RAL 2011

ORDER DATA (SPACING 2.5 MM)

Poles	Width (mm)	Article Designation	Article Number	PU
1	4.50	AK3191/1-2.5-PEBBLE GREY	53191010001F	200
2	7.00	AK3191/2-2.5-PEBBLE GREY	53191020001F	200
3	9.50	AK3191/3-2.5-PEBBLE GREY	53191030001F	200
4	12.00	AK3191/4-2.5-PEBBLE GREY	53191040001F	200
5	14.50	AK3191/5-2.5-PEBBLE GREY	53191050001E	100
6	17.00	AK3191/6-2.5-PEBBLE GREY	53191060001E	100
7	19.50	AK3191/7-2.5-PEBBLE GREY	53191070001E	100
8	22.00	AK3191/8-2.5-PEBBLE GREY	53191080001D	50
...	...	...	...	...
12	32.00	AK3191/12-2.5-PEBBLE GREY	53191120001D	50

ORDER DATA (SPACING 2.54 MM)

Poles	Width (mm)	Article Designation	Article Number	PU
1	4.54	AKZ3191/1-2.54-ORANGE	53191011321F	200
2	7.08	AKZ3191/2-2.54-ORANGE	53191021321F	200
3	9.62	AKZ3191/3-2.54-ORANGE	53191031321F	200
4	12.16	AKZ3191/4-2.54-ORANGE	53191041321F	200
5	14.70	AKZ3191/5-2.54-ORANGE	53191051321E	100
6	17.24	AKZ3191/6-2.54-ORANGE	53191061321E	100
7	19.78	AKZ3191/7-2.54-ORANGE	53191071321E	100
8	22.32	AKZ3191/8-2.54-ORANGE	53191081321D	50
...	...	...	...	...
12	32.48	AKZ3191/12-2.54-ORANGE	53191121321D	50

RATINGS	cULus			VDE	
Usegroup	B	C	D		
Rated Voltage	150 V	-	-	130 V	
Rated Current	4 A	-	-	6 A	
Rated Wire Size				min	max
solid	AWG 28-20	-	-	0.2 mm²	0.5 mm²
stranded	-	-	-	-	-
Test Voltage	1.3 kV	-	-	1.25 kV	

[1]Colours according to RAL, there may be variations on colour due to production conditions. Special colours on request.

L'IMPULSION Retrouvez nous sur www.limpulsion.fr

AK3191/..KD-2.5-PEBBLE GREY
AKZ3191/..KD-2.54-ORANGE

Spacing 2.5 mm / Spacing 2.54 mm
1- to n-poles



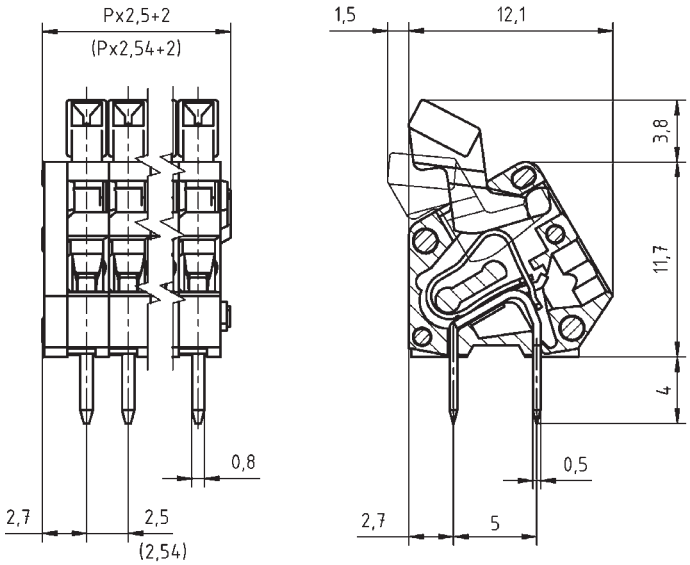

WIRE SIZES	
solid min	0.08 mm²
solid max	1.0 mm²
stranded min	0.14 mm²
stranded max	0.5 mm²
stranded with ferrule min	0.14 mm²
stranded with ferrule max	0.14 mm²
DIMENSIONS	
Stripped Length	5.0 mm
PCB Hole Diameter	1.1 mm
MATERIALS	
Solder Tab	Copper Alloy
Tension Spring	Stainless Steel
INSULATING MATERIAL	
Material	PA 6.6
Flammability Class	UL 94 V-0
TEMPERATURES	
Operating Temperature (without mech. load)	-40 °C - 105 °C
WAVE SOLDERING PROCESS	
Soldering Temperature, recommended	260 °C
Peak Soldering Time, recommended	3-4 s
REFLOW PROCESS	
Soldering Temperature, recommended	-
Peak Soldering Time, recommended	-

COLOURS[1]

PEBBLE GREY, RAL 7032 — ORANGE, RAL 2011

ORDER DATA (SPACING 2.5 MM)

Poles	Width (mm)	Article Designation	Article Number	PU
1	4.50	AK3191/1KD-2.5-PEBBLE GREY	53191011001F	200
2	7.00	AK3191/2KD-2.5-PEBBLE GREY	53191021001F	200
3	9.50	AK3191/3KD-2.5-PEBBLE GREY	53191031001F	200
4	12.00	AK3191/4KD-2.5-PEBBLE GREY	53191041001F	200
5	14.50	AK3191/5KD-2.5-PEBBLE GREY	53191051001E	100
6	17.00	AK3191/6KD-2.5-PEBBLE GREY	53191061001E	100
7	19.50	AK3191/7KD-2.5-PEBBLE GREY	53191071001E	100
8	22.00	AK3191/8KD-2.5-PEBBLE GREY	53191081001D	50
...	...	...	...	...
12	32.00	AK3191/12KD-2.5-PEBBLE GREY	53191121001D	50

ORDER DATA (SPACING 2.54 MM)

Poles	Width (mm)	Article Designation	Article Number	PU
1	4.54	AKZ3191/1KD-2.54-ORANGE	53191010321F	200
2	7.08	AKZ3191/2KD-2.54-ORANGE	53191020321F	200
3	9.62	AKZ3191/3KD-2.54-ORANGE	53191030321F	200
4	12.16	AKZ3191/4KD-2.54-ORANGE	53191040321F	200
5	14.70	AKZ3191/5KD-2.54-ORANGE	53191050321E	100
6	17.24	AKZ3191/6KD-2.54-ORANGE	53191060321E	100
7	19.78	AKZ3191/7KD-2.54-ORANGE	53191070321E	100
8	22.32	AKZ3191/8KD-2.54-ORANGE	53191080321D	50
...	...	...	...	...
12	32.48	AKZ3191/12KD-2.54-ORANGE	53191120321D	50

RATINGS	cULus			VDE	
Usegroup	B	C	D		
Rated Voltage	150 V	-	-	130 V	
Rated Current	4 A	-	-	9 A	
Rated Wire Size				min	max
solid	AWG 28-20	-	-	0.2 mm²	0.5 mm²
stranded	-	-	-	-	-
Test Voltage	1.3 kV	-	-	1.25 kV	

[1]Colours according to RAL, there may be variations on colour due to production conditions. Special colours on request.

Spacing 5.0 mm / 1- to n-poles
Increase to spacing 5.08 mm by pulling on both ends

AK3000/..-5.0-PEBBLE GREY

WIRE SIZES	
solid min	0.08 mm²
solid max	2.5 mm²
stranded min	0.14 mm²
stranded max	2.5 mm²
stranded with ferrule min	0.14 mm²
stranded with ferrule max	1.5 mm²
DIMENSIONS	
Stripped Length	6.0 mm
PCB Hole Diameter	1.1 mm
MATERIALS	
Solder Tab	Copper Alloy
Tension Spring	Stainless Steel
INSULATING MATERIAL	
Material	PA 6.6
Flammability Class	UL 94 V-0
TEMPERATURES	
Operating Temperature (without mech. load)	-40 °C - 105 °C
WAVE SOLDERING PROCESS	
Soldering Temperature, recommended	260 °C
Peak Soldering Time, recommended	3-4 s
REFLOW PROCESS	
Soldering Temperature, recommended	-
Peak Soldering Time, recommended	-



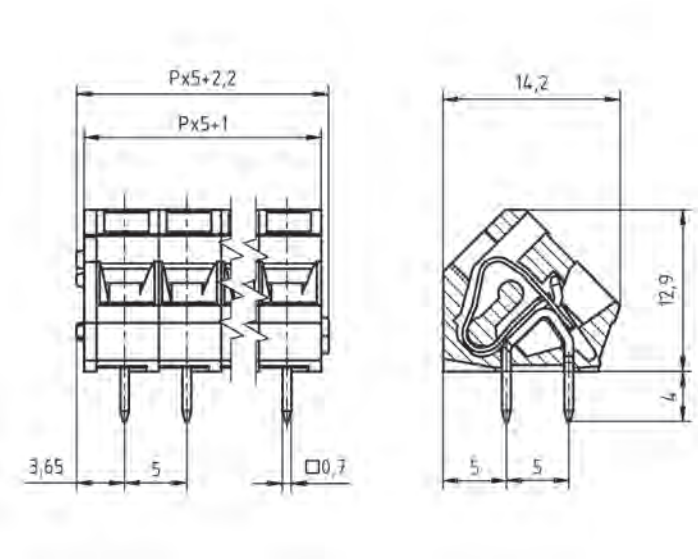

COLOURS[1]

	PEBBLE GREY, RAL 7032		ORANGE, RAL 2011
	BLUE, RAL 5015		LIGHT GREEN, similar RAL 6018

ORDER DATA (SPACING 5.0 MM)

Poles	Width (mm)	Article Designation	Article Number	PU
1	7.20	AK3000/1-5.0-PEBBLE GREY	53000010001G	250
2	12.20	AK3000/2-5.0-PEBBLE GREY	53000020001F	200
3	17.20	AK3000/3-5.0-PEBBLE GREY	53000030001F	200
4	22.20	AK3000/4-5.0-PEBBLE GREY	53000040001F	200
5	27.20	AK3000/5-5.0-PEBBLE GREY	53000050001E	100
6	32.20	AK3000/6-5.0-PEBBLE GREY	53000060001E	100
7	37.20	AK3000/7-5.0-PEBBLE GREY	53000070001E	100
8	42.20	AK3000/8-5.0-PEBBLE GREY	53000080001D	50
9	47.20	AK3000/9-5.0-PEBBLE GREY	53000090001D	50
10	52.20	AK3000/10-5.0-PEBBLE GREY	53000100001D	50
11	57.20	AK3000/11-5.0-PEBBLE GREY	53000110001D	50
12	62.20	AK3000/12-5.0-PEBBLE GREY	53000120001D	50
13	67.20	AK3000/13-5.0-PEBBLE GREY	53000130001D	50
14	72.20	AK3000/14-5.0-PEBBLE GREY	53000140001D	50
15	77.20	AK3000/15-5.0-PEBBLE GREY	53000150001D	50
16	82.20	AK3000/16-5.0-PEBBLE GREY	53000160001D	50
17	87.20	AK3000/17-5.0-PEBBLE GREY	53000170001D	50
18	92.20	AK3000/18-5.0-PEBBLE GREY	53000180001D	50
19	97.20	AK3000/19-5.0-PEBBLE GREY	53000190001D	50
20	102.20	AK3000/20-5.0-PEBBLE GREY	53000200001D	50
21	107.20	AK3000/21-5.0-PEBBLE GREY	53000210001D	50
22	112.20	AK3000/22-5.0-PEBBLE GREY	53000220001D	50
23	117.20	AK3000/23-5.0-PEBBLE GREY	53000230001D	50
24	122.20	AK3000/24-5.0-PEBBLE GREY	53000240001D	50

ACCESSORIES

	Description	Article Number
	Bridge, 2-pole, insulated, BRI/2-5.0/5.08-LIGHT GREY	50000000006
	Bridge, 3-pole, insulated, BRI/3-5.0/5.08-LIGHT GREY	50000000007
	Bridge, 2-pole, BR/2-5.0/5.08-L7.0	50000000008

RATINGS

	cULus			VDE	
Usegroup	B	C	D		
Rated Voltage	300 V	-	300 V	250 V	
Rated Current	15 A	-	10 A	24 A	
Rated Wire Size				min	max
solid	AWG 28-14	-	AWG 28-14	0.5 mm²	2.5 mm²
stranded	AWG 28-14	-	AWG 28-14	0.5 mm²	2.5 mm²
Test Voltage	1.6 kV	-	1.6 kV	2.0 kV	

[1]Colours according to RAL, there may be variations on colour due to production conditions. Special colours on request.

L'IMPULSION
Retrouvez nous sur
www.limpulsion.fr

AK3001/..KD-5.0-PEBBLE GREY

Spacing 5.0 mm / 1- to n-poles
Increase to spacing 5.08 mm by pulling on both ends



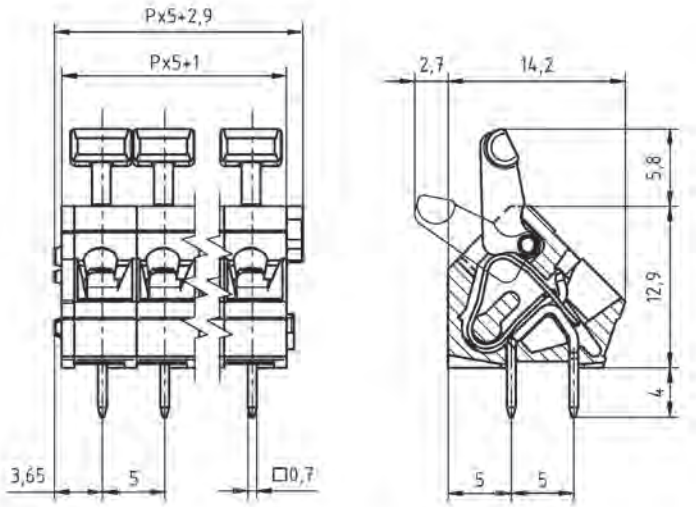

WIRE SIZES	
solid min	0.08 mm²
solid max	2.5 mm²
stranded min	0.14 mm²
stranded max	2.5 mm²
stranded with ferrule min	0.14 mm²
stranded with ferrule max	1.5 mm²
DIMENSIONS	
Stripped Length	6.0 mm
PCB Hole Diameter	1.1 mm
MATERIALS	
Solder Tab	Copper Alloy
Tension Spring	Stainless Steel
INSULATING MATERIAL	
Material	PA 6.6
Flammability Class	UL 94 V-0
TEMPERATURES	
Operating Temperature (without mech. load)	-40 °C - 105 °C
WAVE SOLDERING PROCESS	
Soldering Temperature, recommended	260 °C
Peak Soldering Time, recommended	3-4 s
REFLOW PROCESS	
Soldering Temperature, recommended	-
Peak Soldering Time, recommended	-

COLOURS[1]

	PEBBLE GREY, RAL 7032		GREY, RAL 7016
	LIGHT GREEN, similar RAL 6018		GREEN, RAL 6018
	RED, RAL 3003		ORANGE, RAL 2011
	BLUE, RAL 5015		

ACCESSORIES

	Description	Article Number
	Bridge, 2-pole, insulated, BRI/2-5.0/5.08-LIGHT GREY	50000000006
	Bridge, 3-pole, insulated, BRI/3-5.0/5.08-LIGHT GREY	50000000007
	Bridge, 2-pole, BR/2-5.0/5.08-L7.0	50000000008

RATINGS

	c UL us			VDE	
Usegroup	B	C	D		
Rated Voltage	300 V	-	300 V	250 V	
Rated Current	15 A	-	10 A	24 A	
Rated Wire Size				min	max
solid	AWG 28-14	-	AWG 28-14	0.5 mm²	2.5 mm²
stranded	AWG 28-14	-	AWG 28-14	0.5 mm²	2.5 mm²
Test Voltage	1.6 kV	-	1.6 kV	2.0 kV	

ORDER DATA (SPACING 5.0 MM)

Poles	Width (mm)	Article Designation	Article Number	PU
1	7.90	AK3001/1KD-5.0-PEBBLE GREY	53001010001G	250
2	12.90	AK3001/2KD-5.0-PEBBLE GREY	53001020001F	200
3	17.90	AK3001/3KD-5.0-PEBBLE GREY	53001030001F	200
4	22.90	AK3001/4KD-5.0-PEBBLE GREY	53001040001F	200
5	27.90	AK3001/5KD-5.0-PEBBLE GREY	53001050001E	100
6	32.90	AK3001/6KD-5.0-PEBBLE GREY	53001060001E	100
7	37.90	AK3001/7KD-5.0-PEBBLE GREY	53001070001E	100
8	42.90	AK3001/8KD-5.0-PEBBLE GREY	53001080001D	50
9	47.90	AK3001/9KD-5.0-PEBBLE GREY	53001090001D	50
10	52.90	AK3001/10KD-5.0-PEBBLE GREY	53001100001D	50
11	57.90	AK3001/11KD-5.0-PEBBLE GREY	53001110001D	50
12	62.90	AK3001/12KD-5.0-PEBBLE GREY	53001120001D	50
13	67.90	AK3001/13KD-5.0-PEBBLE GREY	53001130001D	50
14	72.90	AK3001/14KD-5.0-PEBBLE GREY	53001140001D	50
15	77.90	AK3001/15KD-5.0-PEBBLE GREY	53001150001D	50
16	82.90	AK3001/16KD-5.0-PEBBLE GREY	53001160001D	50
17	87.90	AK3001/17KD-5.0-PEBBLE GREY	53001170001D	50
18	92.90	AK3001/18KD-5.0-PEBBLE GREY	53001180001D	50
19	97.90	AK3001/19KD-5.0-PEBBLE GREY	53001190001D	50
20	102.90	AK3001/20KD-5.0-PEBBLE GREY	53001200001D	50
21	107.90	AK3001/21KD-5.0-PEBBLE GREY	53001210001D	50
22	112.90	AK3001/22KD-5.0-PEBBLE GREY	53001220001D	50
23	117.90	AK3001/23KD-5.0-PEBBLE GREY	53001230001D	50
24	122.90	AK3001/24KD-5.0-PEBBLE GREY	53001240001D	50

[1]Colours according to RAL, there may be variations on colour due to production conditions. Special colours on request.

Spacing 5.0 mm / 1- to n-poles
Increase to spacing 5.08 mm by pulling on both ends

AK3001/..FD-5.0-PEBBLE GREY

WIRE SIZES	
solid min	0.08 mm²
solid max	2.5 mm²
stranded min	0.14 mm²
stranded max	2.5 mm²
stranded with ferrule min	0.14 mm²
stranded with ferrule max	1.5 mm²
DIMENSIONS	
Stripped Length	6.0 mm
PCB Hole Diameter	1.1 mm
MATERIALS	
Solder Tab	Copper Alloy
Tension Spring	Stainless Steel
INSULATING MATERIAL	
Material	PA 6.6
Flammability Class	UL 94 V-0
TEMPERATURES	
Operating Temperature (without mech. load)	-40 °C - 105 °C
WAVE SOLDERING PROCESS	
Soldering Temperature, recommended	260 °C
Peak Soldering Time, recommended	3-4 s
REFLOW PROCESS	
Soldering Temperature, recommended	-
Peak Soldering Time, recommended	-



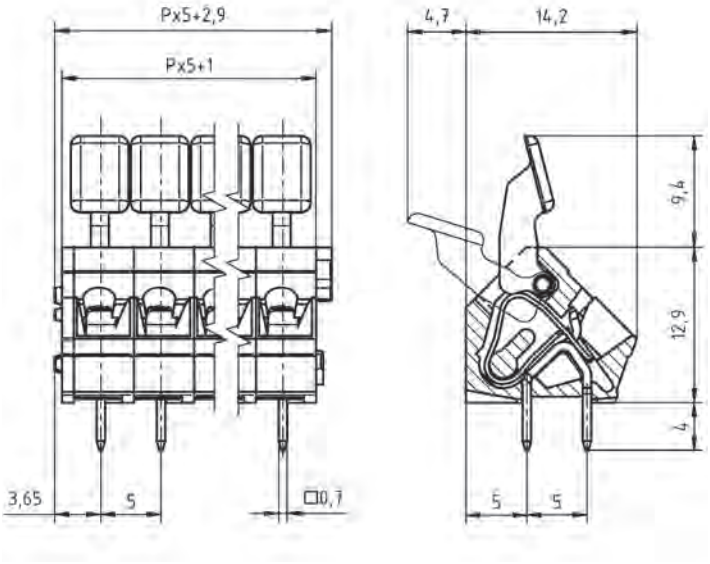

COLOURS[1]

	PEBBLE GREY, RAL 7032		GREY, RAL 7016
	LIGHT GREEN, similar RAL 6018		GREEN, RAL 6018
	RED, RAL 3003		ORANGE, RAL 2011
	BLUE, RAL 5015		

ORDER DATA (SPACING 5.0 MM)

Poles	Width (mm)	Article Designation	Article Number	PU
1	7.90	AK3001/1FD-5.0-PEBBLE GREY	53001010021G	250
2	12.90	AK3001/2FD-5.0-PEBBLE GREY	53001020021F	200
3	17.90	AK3001/3FD-5.0-PEBBLE GREY	53001030021F	200
4	22.90	AK3001/4FD-5.0-PEBBLE GREY	53001040021F	200
5	27.90	AK3001/5FD-5.0-PEBBLE GREY	53001050021E	100
6	32.90	AK3001/6FD-5.0-PEBBLE GREY	53001060021E	100
7	37.90	AK3001/7FD-5.0-PEBBLE GREY	53001070021E	100
8	42.90	AK3001/8FD-5.0-PEBBLE GREY	53001080021D	50
9	47.90	AK3001/9FD-5.0-PEBBLE GREY	53001090021D	50
10	52.90	AK3001/10FD-5.0-PEBBLE GREY	53001100021D	50
11	57.90	AK3001/11FD-5.0-PEBBLE GREY	53001110021D	50
12	62.90	AK3001/12FD-5.0-PEBBLE GREY	53001120021D	50
13	67.90	AK3001/13FD-5.0-PEBBLE GREY	53001130021D	50
14	72.90	AK3001/14FD-5.0-PEBBLE GREY	53001140021D	50
15	77.90	AK3001/15FD-5.0-PEBBLE GREY	53001150021D	50
16	82.90	AK3001/16FD-5.0-PEBBLE GREY	53001160021D	50
17	87.90	AK3001/17FD-5.0-PEBBLE GREY	53001170021D	50
18	92.90	AK3001/18FD-5.0-PEBBLE GREY	53001180021D	50
19	97.90	AK3001/19FD-5.0-PEBBLE GREY	53001190021D	50
20	102.90	AK3001/20FD-5.0-PEBBLE GREY	53001200021D	50
21	107.90	AK3001/21FD-5.0-PEBBLE GREY	53001210021D	50
22	112.90	AK3001/22FD-5.0-PEBBLE GREY	53001220021D	50
23	117.90	AK3001/23FD-5.0-PEBBLE GREY	53001230021D	50
24	122.90	AK3001/24FD-5.0-PEBBLE GREY	53001240021D	50

ACCESSORIES

	Description	Article Number
	Bridge, 2-pole, insulated, BRI/2-5.0/5.08-LIGHT GREY	50000000006
	Bridge, 3-pole, insulated, BRI/3-5.0/5.08-LIGHT GREY	50000000007
	Bridge, 2-pole, BR/2-5.0/5.08-L7.0	50000000008

RATINGS

	cULus			VDE	
Usegroup	B	C	D		
Rated Voltage	300 V	-	300 V	250 V	
Rated Current	15 A	-	10 A	24 A	
Rated Wire Size				min	max
solid	AWG 28-14	-	AWG 28-14	0.5 mm²	2.5 mm²
stranded	AWG 28-14	-	AWG 28-14	0.5 mm²	2.5 mm²
Test Voltage	1.6 kV	-	1.6 kV	2.0 kV	

[1]Colours according to RAL, there may be variations on colour due to production conditions. Special colours on request.

L'IMPULSION
Retrouvez nous sur
www.limpulsion.fr

AK3001/..WD-5.0-PEBBLE GREY

Spacing 5.0 mm / 1- to n-poles
Increase to spacing 5.08 mm by pulling on both ends



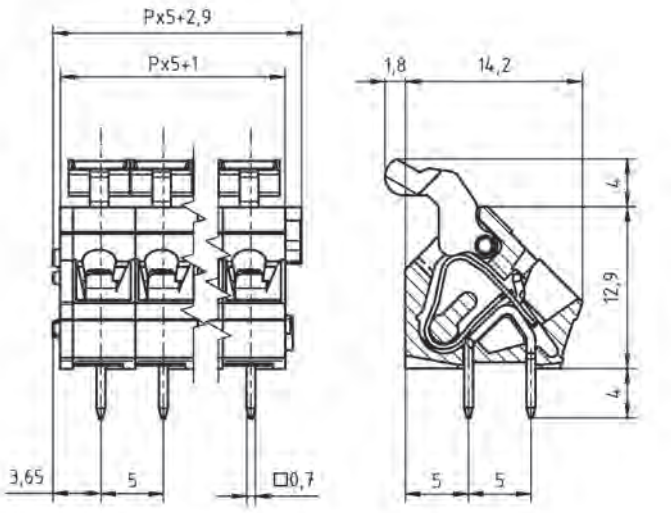

WIRE SIZES	
solid min	0.08 mm²
solid max	2.5 mm²
stranded min	0.14 mm²
stranded max	2.5 mm²
stranded with ferrule min	0.14 mm²
stranded with ferrule max	1.5 mm²
DIMENSIONS	
Stripped Length	6.0 mm
PCB Hole Diameter	1.1 mm
MATERIALS	
Solder Tab	Copper Alloy
Tension Spring	Stainless Steel
INSULATING MATERIAL	
Material	PA 6.6
Flammability Class	UL 94 V-0
TEMPERATURES	
Operating Temperature (without mech. load)	-40 °C - 105 °C
WAVE SOLDERING PROCESS	
Soldering Temperature, recommended	260 °C
Peak Soldering Time, recommended	3-4 s
REFLOW PROCESS	
Soldering Temperature, recommended	-
Peak Soldering Time, recommended	-

COLOURS[1]			
	PEBBLE GREY, RAL 7032		GREY, RAL 7016
	LIGHT GREEN, similar RAL 6018		GREEN, RAL 6018
	RED, RAL 3003		ORANGE, RAL 2011
	BLUE, RAL 5015		

ACCESSORIES

	Description	Article Number
	Bridge, 2-pole, insulated, BRI/2-5.0/5.08-LIGHT GREY	50000000006
	Bridge, 3-pole, insulated, BRI/3-5.0/5.08-LIGHT GREY	50000000007
	Bridge, 2-pole, BR/2-5.0/5.08-L7.0	50000000008

RATINGS

	cULus			VDE	
Usegroup	B	C	D		
Rated Voltage	300 V	-	300 V	250 V	
Rated Current	15 A	-	10 A	24 A	
Rated Wire Size				min	max
solid	AWG 28-14	-	AWG 28-14	0.5 mm²	2.5 mm²
stranded	AWG 28-14	-	AWG 28-14	0.5 mm²	2.5 mm²
Test Voltage	1.6 kV	-	1.6 kV	2.0 kV	

ORDER DATA (SPACING 5.0 MM)

Poles	Width (mm)	Article Designation	Article Number	PU
1	7.90	AK3001/1WD-5.0-PEBBLE GREY	53001010051F	200
2	12.90	AK3001/2WD-5.0-PEBBLE GREY	53001020051F	200
3	17.90	AK3001/3WD-5.0-PEBBLE GREY	53001030051F	200
4	22.90	AK3001/4WD-5.0-PEBBLE GREY	53001040051F	200
5	27.90	AK3001/5WD-5.0-PEBBLE GREY	53001050051E	100
6	32.90	AK3001/6WD-5.0-PEBBLE GREY	53001060051E	100
7	37.90	AK3001/7WD-5.0-PEBBLE GREY	53001070051E	100
8	42.90	AK3001/8WD-5.0-PEBBLE GREY	53001080051D	50
9	47.90	AK3001/9WD-5.0-PEBBLE GREY	53001090051D	50
10	52.90	AK3001/10WD-5.0-PEBBLE GREY	53001100051D	50
11	57.90	AK3001/11WD-5.0-PEBBLE GREY	53001110051D	50
12	62.90	AK3001/12WD-5.0-PEBBLE GREY	53001120051D	50
13	67.90	AK3001/13WD-5.0-PEBBLE GREY	53001130051D	50
14	72.90	AK3001/14WD-5.0-PEBBLE GREY	53001140051D	50
15	77.90	AK3001/15WD-5.0-PEBBLE GREY	53001150051D	50
16	82.90	AK3001/16WD-5.0-PEBBLE GREY	53001160051D	50
17	87.90	AK3001/17WD-5.0-PEBBLE GREY	53001170051D	50
18	92.90	AK3001/18WD-5.0-PEBBLE GREY	53001180051D	50
19	97.90	AK3001/19WD-5.0-PEBBLE GREY	53001190051D	50
20	102.90	AK3001/20WD-5.0-PEBBLE GREY	53001200051D	50
21	107.90	AK3001/21WD-5.0-PEBBLE GREY	53001210051D	50
22	112.90	AK3001/22WD-5.0-PEBBLE GREY	53001220051D	50
23	117.90	AK3001/23WD-5.0-PEBBLE GREY	53001230051D	50
24	122.90	AK3001/24WD-5.0-PEBBLE GREY	53001240051D	50

[1]Colours according to RAL, there may be variations on colour due to production conditions. Special colours on request.

Spacing 5.0 mm / 1- to n-poles
Increase to spacing 5.08 mm by pulling on both ends

AK3100/..-5.0-PEBBLE GREY

WIRE SIZES	
solid min	0.14 mm²
solid max	2.5 mm²
stranded min	0.14 mm²
stranded max	2.5 mm²
stranded with ferrule min	0.14 mm²
stranded with ferrule max	1.5 mm²
DIMENSIONS	
Stripped Length	6.0 mm
PCB Hole Diameter	1.1 mm
MATERIALS	
Solder Tab	Copper Alloy
Tension Spring	Stainless Steel
INSULATING MATERIAL	
Material	PA 6.6
Flammability Class	UL 94 V-0
TEMPERATURES	
Operating Temperature (without mech. load)	-40 °C - 105 °C
WAVE SOLDERING PROCESS	
Soldering Temperature, recommended	260 °C
Peak Soldering Time, recommended	3-4 s
REFLOW PROCESS	
Soldering Temperature, recommended	-
Peak Soldering Time, recommended	-



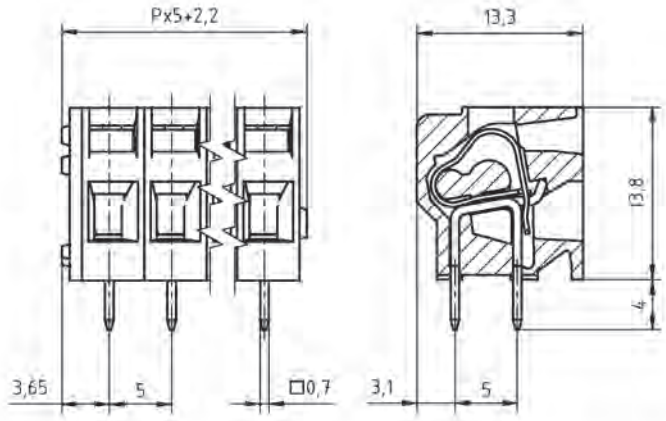

COLOURS[1]

PEBBLE GREY, RAL 7032

ORDER DATA (SPACING 5.0 MM)

Poles	Width (mm)	Article Designation	Article Number	PU
1	7.20	AK3100/1-5.0-PEBBLE GREY	53100010001G	250
2	12.20	AK3100/2-5.0-PEBBLE GREY	53100020001F	200
3	17.20	AK3100/3-5.0-PEBBLE GREY	53100030001F	200
4	22.20	AK3100/4-5.0-PEBBLE GREY	53100040001F	200
5	27.20	AK3100/5-5.0-PEBBLE GREY	53100050001E	100
6	32.20	AK3100/6-5.0-PEBBLE GREY	53100060001E	100
7	37.20	AK3100/7-5.0-PEBBLE GREY	53100070001E	100
8	42.20	AK3100/8-5.0-PEBBLE GREY	53100080001D	50
9	47.20	AK3100/9-5.0-PEBBLE GREY	53100090001D	50
10	52.20	AK3100/10-5.0-PEBBLE GREY	53100100001D	50
11	57.20	AK3100/11-5.0-PEBBLE GREY	53100110001D	50
12	62.20	AK3100/12-5.0-PEBBLE GREY	53100120001D	50
13	67.20	AK3100/13-5.0-PEBBLE GREY	53100130001D	50
14	72.20	AK3100/14-5.0-PEBBLE GREY	53100140001D	50
15	77.20	AK3100/15-5.0-PEBBLE GREY	53100150001D	50
16	82.20	AK3100/16-5.0-PEBBLE GREY	53100160001D	50
17	87.20	AK3100/17-5.0-PEBBLE GREY	53100170001D	50
18	92.20	AK3100/18-5.0-PEBBLE GREY	53100180001D	50
19	97.20	AK3100/19-5.0-PEBBLE GREY	53100190001D	50
20	102.20	AK3100/20-5.0-PEBBLE GREY	53100200001D	50
21	107.20	AK3100/21-5.0-PEBBLE GREY	53100210001D	50
22	112.20	AK3100/22-5.0-PEBBLE GREY	53100220001D	50
23	117.20	AK3100/23-5.0-PEBBLE GREY	53100230001D	50
24	122.20	AK3100/24-5.0-PEBBLE GREY	53100240001D	50

ACCESSORIES

	Description	Article Number
	Bridge, 2-pole, insulated, BRI/2-5.0/5.08-LIGHT GREY	50000000006
	Bridge, 3-pole, insulated, BRI/3-5.0/5.08-LIGHT GREY	50000000007
	Bridge, 2-pole, BR/2-5.0/5.08-L7.0	50000000008

RATINGS

	cULus			VDE	
Usegroup	B	C	D		
Rated Voltage	300 V	-	300 V	250 V	
Rated Current	15 A	-	10 A	24 A	
Rated Wire Size				min	max
solid	AWG 28-14	-	AWG 28-14	0.5 mm²	2.5 mm²
stranded	AWG 28-14	-	AWG 28-14	0.5 mm²	2.5 mm²
Test Voltage	1.6 kV	-	1.6 kV	2.0 kV	

[1]Colours according to RAL, there may be variations on colour due to production conditions. Special colours on request.

L'IMPULSION
Retrouvez nous sur
www.limpulsion.fr

AK3100/..FP-5.0-PEBBLE GREY

Spacing 5.0 mm / 1- to n-poles
Increase to spacing 5.08 mm by pulling on both ends



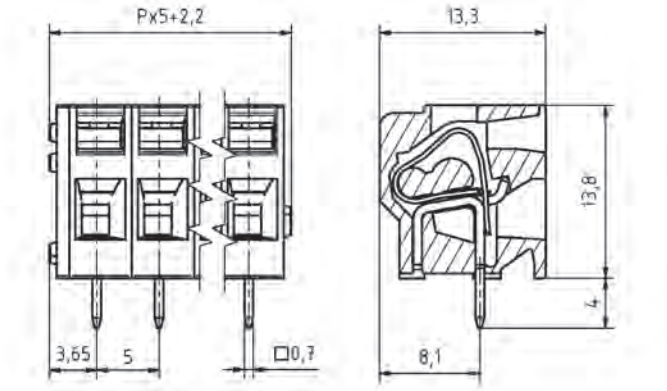

WIRE SIZES	
solid min	0.14 mm²
solid max	2.5 mm²
stranded min	0.14 mm²
stranded max	2.5 mm²
stranded with ferrule min	0.14 mm²
stranded with ferrule max	1.5 mm²
DIMENSIONS	
Stripped Length	6.0 mm
PCB Hole Diameter	1.1 mm
MATERIALS	
Solder Tab	Copper Alloy
Tension Spring	Stainless Steel
INSULATING MATERIAL	
Material	PA 6.6
Flammability Class	UL 94 V-0
TEMPERATURES	
Operating Temperature (without mech. load)	-40 °C - 105 °C
WAVE SOLDERING PROCESS	
Soldering Temperature, recommended	260 °C
Peak Soldering Time, recommended	3-4 s
REFLOW PROCESS	
Soldering Temperature, recommended	-
Peak Soldering Time, recommended	-

COLOURS[1]
PEBBLE GREY, RAL 7032

ACCESSORIES

	Description	Article Number
	Bridge, 2-pole, insulated, BRI/2-5.0/5.08-LIGHT GREY	50000000006
	Bridge, 3-pole, insulated, BRI/3-5.0/5.08-LIGHT GREY	50000000007
	Bridge, 2-pole, BR/2-5.0/5.08-L7.0	50000000008

RATINGS

	cULus		VDE	
Usegroup	B	C	D	
Rated Voltage	300 V	-	300 V	250 V
Rated Current	15 A	-	10 A	24 A
Rated Wire Size				min / max
solid	AWG 28-14	-	AWG 28-14	0.5 mm² / 2.5 mm²
stranded	AWG 28-14	-	AWG 28-14	0.5 mm² / 2.5 mm²
Test Voltage	1.6 kV	-	1.6 kV	2.0 kV

ORDER DATA (SPACING 5.0 MM)

Poles	Width (mm)	Article Designation	Article Number	PU
1	7.20	AK3100/1FP-5.0-PEBBLE GREY	53100010003G	250
2	12.20	AK3100/2FP-5.0-PEBBLE GREY	53100020003F	200
3	17.20	AK3100/3FP-5.0-PEBBLE GREY	53100030003F	200
4	22.20	AK3100/4FP-5.0-PEBBLE GREY	53100040003F	200
5	27.20	AK3100/5FP-5.0-PEBBLE GREY	53100050003E	100
6	32.20	AK3100/6FP-5.0-PEBBLE GREY	53100060003E	100
7	37.20	AK3100/7FP-5.0-PEBBLE GREY	53100070003E	100
8	42.20	AK3100/8FP-5.0-PEBBLE GREY	53100080003D	50
9	47.20	AK3100/9FP-5.0-PEBBLE GREY	53100090003D	50
10	52.20	AK3100/10FP-5.0-PEBBLE GREY	53100100003D	50
11	57.20	AK3100/11FP-5.0-PEBBLE GREY	53100110003D	50
12	62.20	AK3100/12FP-5.0-PEBBLE GREY	53100120003D	50
13	67.20	AK3100/13FP-5.0-PEBBLE GREY	53100130003D	50
14	72.20	AK3100/14FP-5.0-PEBBLE GREY	53100140003D	50
15	77.20	AK3100/15FP-5.0-PEBBLE GREY	53100150003D	50
16	82.20	AK3100/16FP-5.0-PEBBLE GREY	53100160003D	50
17	87.20	AK3100/17FP-5.0-PEBBLE GREY	53100170003D	50
18	92.20	AK3100/18FP-5.0-PEBBLE GREY	53100180003D	50
19	97.20	AK3100/19FP-5.0-PEBBLE GREY	53100190003D	50
20	102.20	AK3100/20FP-5.0-PEBBLE GREY	53100200003D	50
21	107.20	AK3100/21FP-5.0-PEBBLE GREY	53100210003D	50
22	112.20	AK3100/22FP-5.0-PEBBLE GREY	53100220003D	50
23	117.20	AK3100/23FP-5.0-PEBBLE GREY	53100230003D	50
24	122.20	AK3100/24FP-5.0-PEBBLE GREY	53100240003D	50

[1]Colours according to RAL, there may be variations on colour due to production conditions. Special colours on request.

Spacing 5.0 mm
1- to n-poles

AK3101/..KD-5.0-PEBBLE GREY

WIRE SIZES	
solid min	0.14 mm²
solid max	2.5 mm²
stranded min	0.14 mm²
stranded max	2.5 mm²
stranded with ferrule min	0.14 mm²
stranded with ferrule max	1.5 mm²
DIMENSIONS	
Stripped Length	6.0 mm
PCB Hole Diameter	1.1 mm
MATERIALS	
Solder Tab	Copper Alloy
Tension Spring	Stainless Steel
INSULATING MATERIAL	
Material	PA 6.6
Flammability Class	UL 94 V-0
TEMPERATURES	
Operating Temperature (without mech. load)	-40 °C - 105 °C
WAVE SOLDERING PROCESS	
Soldering Temperature, recommended	260 °C
Peak Soldering Time, recommended	3-4 s
REFLOW PROCESS	
Soldering Temperature, recommended	-
Peak Soldering Time, recommended	-



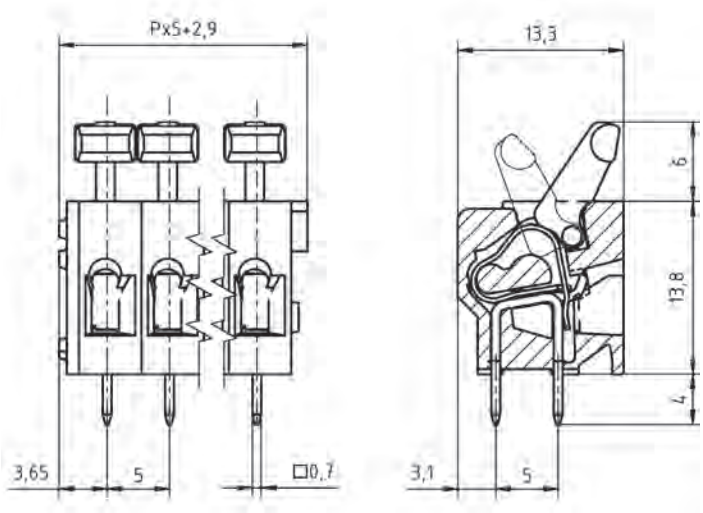

COLOURS[1]

PEBBLE GREY, RAL 7032

ORDER DATA (SPACING 5.0 MM)

Poles	Width (mm)	Article Designation	Article Number	PU
1	7.90	AK3101/1KD-5.0-PEBBLE GREY	53101010001G	250
2	12.90	AK3101/2KD-5.0-PEBBLE GREY	53101020001F	200
3	17.90	AK3101/3KD-5.0-PEBBLE GREY	53101030001F	200
4	22.90	AK3101/4KD-5.0-PEBBLE GREY	53101040001F	200
5	27.90	AK3101/5KD-5.0-PEBBLE GREY	53101050001E	100
6	32.90	AK3101/6KD-5.0-PEBBLE GREY	53101060001E	100
7	37.90	AK3101/7KD-5.0-PEBBLE GREY	53101070001E	100
8	42.90	AK3101/8KD-5.0-PEBBLE GREY	53101080001D	50
9	47.90	AK3101/9KD-5.0-PEBBLE GREY	53101090001D	50
10	52.90	AK3101/10KD-5.0-PEBBLE GREY	53101100001D	50
11	57.90	AK3101/11KD-5.0-PEBBLE GREY	53101110001D	50
12	62.90	AK3101/12KD-5.0-PEBBLE GREY	53101120001D	50
13	67.90	AK3101/13KD-5.0-PEBBLE GREY	53101130001D	50
14	72.90	AK3101/14KD-5.0-PEBBLE GREY	53101140001D	50
15	77.90	AK3101/15KD-5.0-PEBBLE GREY	53101150001D	50
16	82.90	AK3101/16KD-5.0-PEBBLE GREY	53101160001D	50
17	87.90	AK3101/17KD-5.0-PEBBLE GREY	53101170001D	50
18	92.90	AK3101/18KD-5.0-PEBBLE GREY	53101180001D	50
19	97.90	AK3101/19KD-5.0-PEBBLE GREY	53101190001D	50
20	102.90	AK3101/20KD-5.0-PEBBLE GREY	53101200001D	50
21	107.90	AK3101/21KD-5.0-PEBBLE GREY	53101210001D	50
22	112.90	AK3101/22KD-5.0-PEBBLE GREY	53101220001D	50
23	117.90	AK3101/23KD-5.0-PEBBLE GREY	53101230001D	50
24	122.90	AK3101/24KD-5.0-PEBBLE GREY	53101240001D	50

ACCESSORIES

	Description	Article Number
	Bridge, 2-pole, insulated, BRI/2-5.0/5.08-LIGHT GREY	50000000006
	Bridge, 3-pole, insulated, BRI/3-5.0/5.08-LIGHT GREY	50000000007
	Bridge, 2-pole, BR/2-5.0/5.08-L7.0	50000000008

RATINGS

	cULus			VDE	
Usegroup	B	C	D		
Rated Voltage	300 V	-	300 V	250 V	
Rated Current	15 A	-	10 A	24 A	
Rated Wire Size				min	max
solid	AWG 28-14	-	AWG 28-14	0.5 mm²	2.5 mm²
stranded	AWG 28-14	-	AWG 28-14	0.5 mm²	2.5 mm²
Test Voltage	1.6 kV	-	1.6 kV	2.0 kV	

[1]Colours according to RAL, there may be variations on colour due to production conditions. Special colours on request.

L'IMPULSION Retrouvez nous sur www.limpulsion.fr

AK3101/..WD-5.0-PEBBLE GREY

Spacing 5.0 mm
1- to n-poles



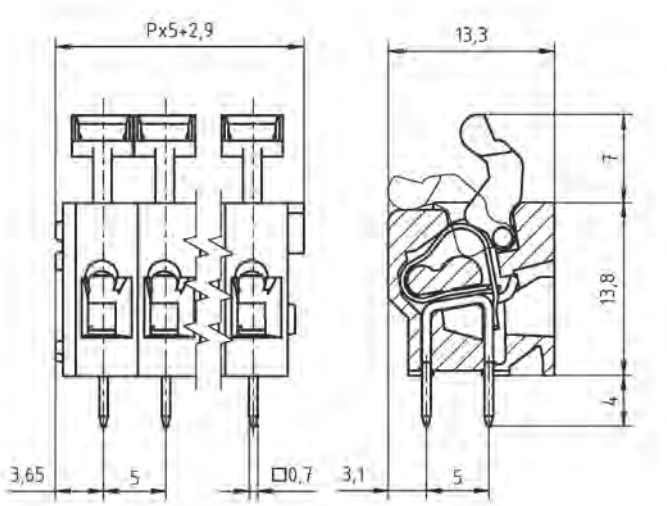

WIRE SIZES	
solid min	0.14 mm²
solid max	2.5 mm²
stranded min	0.14 mm²
stranded max	2.5 mm²
stranded with ferrule min	0.14 mm²
stranded with ferrule max	1.5 mm²
DIMENSIONS	
Stripped Length	6.0 mm
PCB Hole Diameter	1.1 mm
MATERIALS	
Solder Tab	Copper Alloy
Tension Spring	Stainless Steel
INSULATING MATERIAL	
Material	PA 6.6
Flammability Class	UL 94 V-0
TEMPERATURES	
Operating Temperature (without mech. load)	-40 °C - 105 °C
WAVE SOLDERING PROCESS	
Soldering Temperature, recommended	260 °C
Peak Soldering Time, recommended	3-4 s
REFLOW PROCESS	
Soldering Temperature, recommended	-
Peak Soldering Time, recommended	-

COLOURS[1]
PEBBLE GREY, RAL 7032

ACCESSORIES

	Description	Article Number
	Bridge, 2-pole, insulated, BRI/2-5.0/5.08-LIGHT GREY	50000000006
	Bridge, 3-pole, insulated, BRI/3-5.0/5.08-LIGHT GREY	50000000007
	Bridge, 2-pole, BR/2-5.0/5.08-L7.0	50000000008

RATINGS

	c UL us			VDE	
Usegroup	B	C	D		
Rated Voltage	300 V	-	300 V	250 V	
Rated Current	15 A	-	10 A	24 A	
Rated Wire Size				min	max
solid	AWG 28-14	-	AWG 28-14	0.5 mm²	2.5 mm²
stranded	AWG 28-14	-	AWG 28-14	0.5 mm²	2.5 mm²
Test Voltage	1.6 kV	-	1.6 kV	2.0 kV	

ORDER DATA (SPACING 5.0 MM)

Poles	Width (mm)	Article Designation	Article Number	PU
1	7.90	AK3101/1WD-5.0-PEBBLE GREY	53101010021G	250
2	12.90	AK3101/2WD-5.0-PEBBLE GREY	53101020021F	200
3	17.90	AK3101/3WD-5.0-PEBBLE GREY	53101030021F	200
4	22.90	AK3101/4WD-5.0-PEBBLE GREY	53101040021F	200
5	27.90	AK3101/5WD-5.0-PEBBLE GREY	53101050021E	100
6	32.90	AK3101/6WD-5.0-PEBBLE GREY	53101060021E	100
7	37.90	AK3101/7WD-5.0-PEBBLE GREY	53101070021E	100
8	42.90	AK3101/8WD-5.0-PEBBLE GREY	53101080021D	50
9	47.90	AK3101/9WD-5.0-PEBBLE GREY	53101090021D	50
10	52.90	AK3101/10WD-5.0-PEBBLE GREY	53101100021D	50
11	57.90	AK3101/11WD-5.0-PEBBLE GREY	53101110021D	50
12	62.90	AK3101/12WD-5.0-PEBBLE GREY	53101120021D	50
13	67.90	AK3101/13WD-5.0-PEBBLE GREY	53101130021D	50
14	72.90	AK3101/14WD-5.0-PEBBLE GREY	53101140021D	50
15	77.90	AK3101/15WD-5.0-PEBBLE GREY	53101150021D	50
16	82.90	AK3101/16WD-5.0-PEBBLE GREY	53101160021D	50
17	87.90	AK3101/17WD-5.0-PEBBLE GREY	53101170021D	50
18	92.90	AK3101/18WD-5.0-PEBBLE GREY	53101180021D	50
19	97.90	AK3101/19WD-5.0-PEBBLE GREY	53101190021D	50
20	102.90	AK3101/20WD-5.0-PEBBLE GREY	53101200021D	50
21	107.90	AK3101/21WD-5.0-PEBBLE GREY	53101210021D	50
22	112.90	AK3101/22WD-5.0-PEBBLE GREY	53101220021D	50
23	117.90	AK3101/23WD-5.0-PEBBLE GREY	53101230021D	50
24	122.90	AK3101/24WD-5.0-PEBBLE GREY	53101240021D	50

[1]Colours according to RAL, there may be variations on colour due to production conditions. Special colours on request.

Spacing 5.0 mm / Spacing 5.08 mm
1- to n-poles

AK3750/..-5.0-GREEN
AKZ3750/..-5.08-GREEN

WIRE SIZES	
solid min	0.08 mm²
solid max	2.5 mm²
stranded min	0.14 mm²
stranded max	2.5 mm²
stranded with ferrule min	0.14 mm²
stranded with ferrule max	1.5 mm²
DIMENSIONS	
Stripped Length	6.0 mm
PCB Hole Diameter	1.3 mm
MATERIALS	
Solder Tab	Copper Alloy
Tension Spring	Stainless Steel
INSULATING MATERIAL	
Material	PA 6.6
Flammability Class	UL 94 V-0
TEMPERATURES	
Operating Temperature (without mech. load)	-40 °C - 105 °C
WAVE SOLDERING PROCESS	
Soldering Temperature, recommended	260 °C
Peak Soldering Time, recommended	3-4 s
REFLOW PROCESS	
Soldering Temperature, recommended	-
Peak Soldering Time, recommended	-



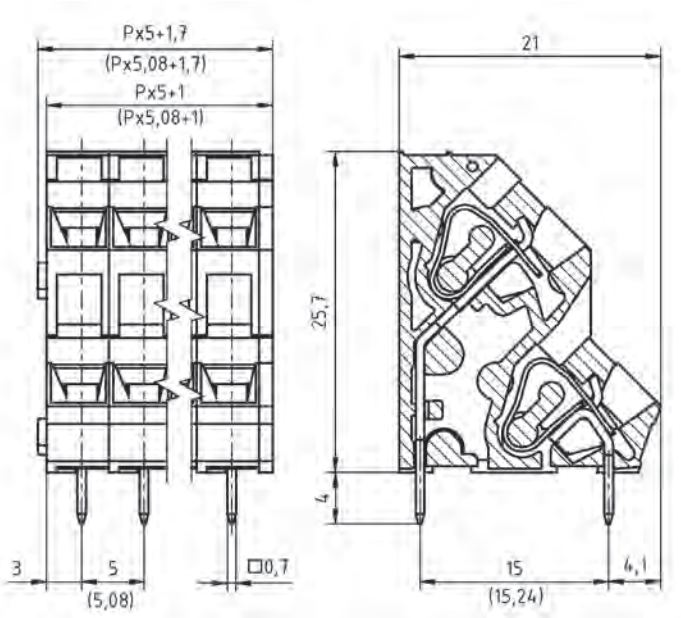

COLOURS[1]

	GREEN, RAL 6018		TRAFFIC GREY, RAL 7042
	LIGHT GREEN, similar RAL 6018		

ORDER DATA (SPACING 5.0 MM)

Poles	Width (mm)	Article Designation	Article Number	PU
1	6.70	AK3750/1-5.0-GREEN	53750010203F	200
2	11.70	AK3750/2-5.0-GREEN	53750020203E	100
3	16.70	AK3750/3-5.0-GREEN	53750030203E	100
4	21.70	AK3750/4-5.0-GREEN	53750040203D	50
5	26.70	AK3750/5-5.0-GREEN	53750050203D	50
6	31.70	AK3750/6-5.0-GREEN	53750060203D	50
7	36.70	AK3750/7-5.0-GREEN	53750070203D	50
8	41.70	AK3750/8-5.0-GREEN	53750080203D	50
...	...	...	...	...
12	61.70	AK3750/12-5.0-GREEN	53750120203D	50

ORDER DATA (SPACING 5.08 MM)

Poles	Width (mm)	Article Designation	Article Number	PU
1	6.78	AKZ3750/1-5.08-GREEN	53750010213F	200
2	11.86	AKZ3750/2-5.08-GREEN	53750020213E	100
3	16.94	AKZ3750/3-5.08-GREEN	53750030213E	100
4	22.02	AKZ3750/4-5.08-GREEN	53750040213D	50
5	27.10	AKZ3750/5-5.08-GREEN	53750050213D	50
6	32.18	AKZ3750/6-5.08-GREEN	53750060213D	50
7	37.26	AKZ3750/7-5.08-GREEN	53750070213D	50
8	42.34	AKZ3750/8-5.08-GREEN	53750080213D	50
...	...	...	...	...
12	62.66	AKZ3750/12-5.08-GREEN	53750120213D	50

ACCESSORIES

	Description	Article Number
	Bridge, 2-pole, insulated, BRI/2-5.0/5.08-LIGHT GREY	50000000006
	Bridge, 3-pole, insulated, BRI/3-5.0/5.08-LIGHT GREY	50000000007
	Bridge, 2-pole, BR/2-5.0/5.08-L7.0	50000000008

RATINGS

	cULus			VDE	
Usegroup	B	C	D		
Rated Voltage	300 V	-	300 V	250 V	
Rated Current	16 A	-	10 A	12 A	
Rated Wire Size				min	max
solid	AWG 28-14	-	AWG 28-14	0.5 mm²	2.5 mm²
stranded	AWG 28-14	-	AWG 28-14	0.5 mm²	2.5 mm²
Test Voltage	1.6 kV	-	1.6 kV	2.0 kV	

[1]Colours according to RAL, there may be variations on colour due to production conditions. Special colours on request.

L'IMPULSION
Retrouvez nous sur
www.limpulsion.fr

AK3750/..-5.0-GREEN-PD10.0
AKZ3750/..-5.08-GREEN-PD10.16

Spacing 5.0 mm / Spacing 5.08 mm
1- to n-poles



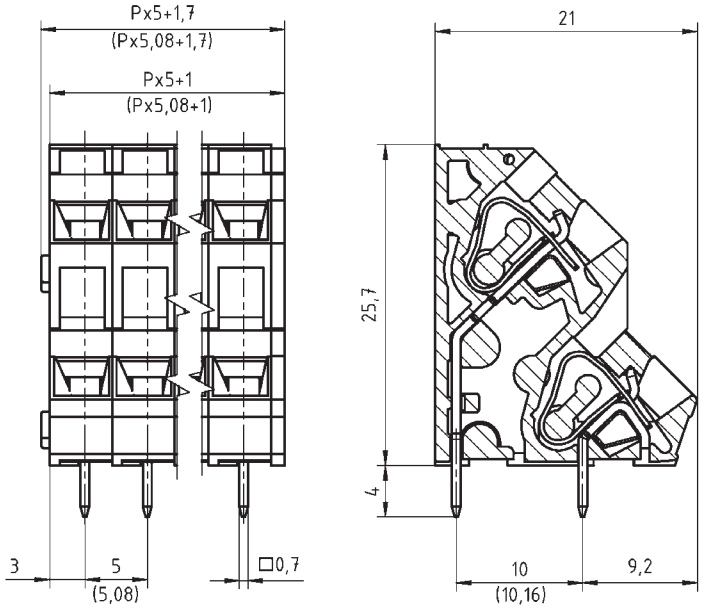

WIRE SIZES	
solid min	0.08 mm²
solid max	2.5 mm²
stranded min	0.14 mm²
stranded max	2.5 mm²
stranded with ferrule min	0.14 mm²
stranded with ferrule max	1.5 mm²
DIMENSIONS	
Stripped Length	6.0 mm
PCB Hole Diameter	1.0 mm
MATERIALS	
Solder Tab	Copper Alloy
Tension Spring	Stainless Steel
INSULATING MATERIAL	
Material	PA 6.6
Flammability Class	UL 94 V-0
TEMPERATURES	
Operating Temperature (without mech. load)	-40 °C - 105 °C
WAVE SOLDERING PROCESS	
Soldering Temperature, recommended	260 °C
Peak Soldering Time, recommended	3-4 s
REFLOW PROCESS	
Soldering Temperature, recommended	-
Peak Soldering Time, recommended	-

COLOURS[1]

GREEN, RAL 6018	TRAFFIC GREY, RAL 7042
LIGHT GREEN, similar RAL 6018	

ACCESSORIES

	Description	Article Number
	Bridge, 2-pole, insulated, BRI/2-5.0/5.08-LIGHT GREY	50000000006
	Bridge, 3-pole, insulated, BRI/3-5.0/5.08-LIGHT GREY	50000000007
	Bridge, 2-pole, BR/2-5.0/5.08-L7.0	50000000008

RATINGS

	cULus		VDE	
Usegroup	B	C	D	
Rated Voltage	300 V	-	300 V	250 V
Rated Current	16 A	-	10 A	12 A
Rated Wire Size			min	max
solid	AWG 28-14	-	AWG 28-14	0.5 mm²	2.5 mm²
stranded	AWG 28-14	-	AWG 28-14	0.5 mm²	2.5 mm²
Test Voltage	1.6 kV	-	1.6 kV	2.0 kV	

ORDER DATA (SPACING 5.0 MM)

Poles	Width (mm)	Article Designation	Article Number	PU
1	6.70	AK3750/1-5.0-GREEN-PD10.0	53750010241F	200
2	11.70	AK3750/2-5.0-GREEN-PD10.0	53750020241E	100
3	16.70	AK3750/3-5.0-GREEN-PD10.0	53750030241E	100
4	21.70	AK3750/4-5.0-GREEN-PD10.0	53750040241D	50
5	26.70	AK3750/5-5.0-GREEN-PD10.0	53750050241D	50
6	31.70	AK3750/6-5.0-GREEN-PD10.0	53750060241D	50
7	36.70	AK3750/7-5.0-GREEN-PD10.0	53750070241D	50
8	41.70	AK3750/8-5.0-GREEN-PD10.0	53750080241D	50
...	...	...	...	...
12	61.70	AK3750/12-5.0-GREEN-PD10.0	53750120241D	50

ORDER DATA (SPACING 5.08 MM)

Poles	Width (mm)	Article Designation	Article Number	PU
1	6.78	AKZ3750/1-5.08-GREEN-PD10.16	53750010251F	200
2	11.86	AKZ3750/2-5.08-GREEN-PD10.16	53750020251E	100
3	16.94	AKZ3750/3-5.08-GREEN-PD10.16	53750030251E	100
4	22.02	AKZ3750/4-5.08-GREEN-PD10.16	53750040251D	50
5	27.10	AKZ3750/5-5.08-GREEN-PD10.16	53750050251D	50
6	32.18	AKZ3750/6-5.08-GREEN-PD10.16	53750060251D	50
7	37.26	AKZ3750/7-5.08-GREEN-PD10.16	53750070251D	50
8	42.34	AKZ3750/8-5.08-GREEN-PD10.16	53750080251D	50
...	...	...	...	...
12	62.66	AKZ3750/12-5.08-GREEN-PD10.16	53750120251D	50

[1]Colours according to RAL, there may be variations on colour due to production conditions. Special colours on request.

Spacing 5.0 mm / Spacing 5.08 mm
1- to n-poles

AK3750/..VP-5.0-GREEN
AKZ3750/..VP-5.08-GREEN

WIRE SIZES	
solid min	0.08 mm²
solid max	2.5 mm²
stranded min	0.14 mm²
stranded max	2.5 mm²
stranded with ferrule min	0.14 mm²
stranded with ferrule max	1.5 mm²
DIMENSIONS	
Stripped Length	6.0 mm
PCB Hole Diameter	1.3 mm
MATERIALS	
Solder Tab	Copper Alloy
Tension Spring	Stainless Steel
INSULATING MATERIAL	
Material	PA 6.6
Flammability Class	UL 94 V-0
TEMPERATURES	
Operating Temperature (without mech. load)	-40 °C - 105 °C
WAVE SOLDERING PROCESS	
Soldering Temperature, recommended	260 °C
Peak Soldering Time, recommended	3-4 s
REFLOW PROCESS	
Soldering Temperature, recommended	-
Peak Soldering Time, recommended	-



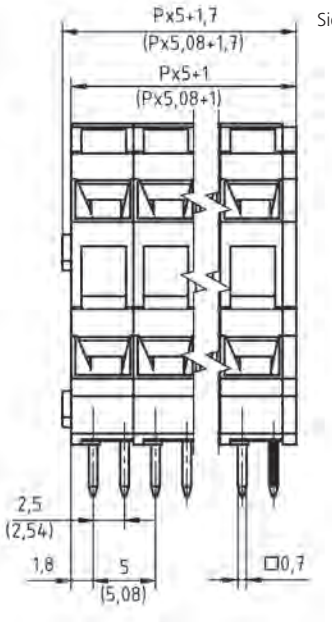

Side view Dimensions see page 160

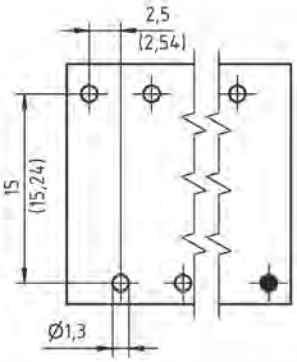

Alternating pinning (VP) starts with the front right pole.
Different pinning available on request.

COLOURS[1]

	GREEN, RAL 6018		TRAFFIC GREY, RAL 7042
	LIGHT GREEN, similar RAL 6018		

ORDER DATA (SPACING 5.0 MM)

Poles	Width (mm)	Article Designation	Article Number	PU
1	6.70	AK3750/1VP-5.0-GREEN	53750010201F	200
2	11.70	AK3750/2VP-5.0-GREEN	53750020201E	100
3	16.70	AK3750/3VP-5.0-GREEN	53750030201E	100
4	21.70	AK3750/4VP-5.0-GREEN	53750040201D	50
5	26.70	AK3750/5VP-5.0-GREEN	53750050201D	50
6	31.70	AK3750/6VP-5.0-GREEN	53750060201D	50
7	36.70	AK3750/7VP-5.0-GREEN	53750070201D	50
8	41.70	AK3750/8VP-5.0-GREEN	53750080201D	50
...	...	...	...	...
12	61.70	AK3750/12VP-5.0-GREEN	53750120201D	50

ORDER DATA (SPACING 5.08 MM)

Poles	Width (mm)	Article Designation	Article Number	PU
1	6.78	AKZ3750/1VP-5.08-GREEN	53750010210F	200
2	11.86	AKZ3750/2VP-5.08-GREEN	53750020210E	100
3	16.94	AKZ3750/3VP-5.08-GREEN	53750030210E	100
4	22.02	AKZ3750/4VP-5.08-GREEN	53750040210D	50
5	27.10	AKZ3750/5VP-5.08-GREEN	53750050210D	50
6	32.18	AKZ3750/6VP-5.08-GREEN	53750060210D	50
7	37.26	AKZ3750/7VP-5.08-GREEN	53750070210D	50
8	42.34	AKZ3750/8VP-5.08-GREEN	53750080210D	50
...	...	...	...	...
12	62.66	AKZ3750/12VP-5.08-GREEN	53750120210D	50

ACCESSORIES

	Description	Article Number
	Bridge, 2-pole, insulated, BRI/2-5.0/5.08-LIGHT GREY	50000000006
	Bridge, 3-pole, insulated, BRI/3-5.0/5.08-LIGHT GREY	50000000007
	Bridge, 2-pole, BR/2-5.0/5.08-L7.0	50000000008

RATINGS	cULus			VDE	
Usegroup	B	C	D		
Rated Voltage	300 V	-	300 V	250 V	
Rated Current	16 A	-	10 A	12 A	
Rated Wire Size				min	max
solid	AWG 28-14	-	AWG 28-14	0.5 mm²	2.5 mm²
stranded	AWG 28-14	-	AWG 28-14	0.5 mm²	2.5 mm²
Test Voltage	1.6 kV	-	1.6 kV	2.0 kV	

[1]Colours according to RAL, there may be variations on colour due to production conditions. Special colours on request.

L'IMPULSION
Retrouvez nous sur
www.limpulsion.fr

AK3010/..-7.5-PEBBLE GREY

Spacing 7.5 mm / 1- to n-poles
Increase to spacing 7.62 mm by pulling on both ends



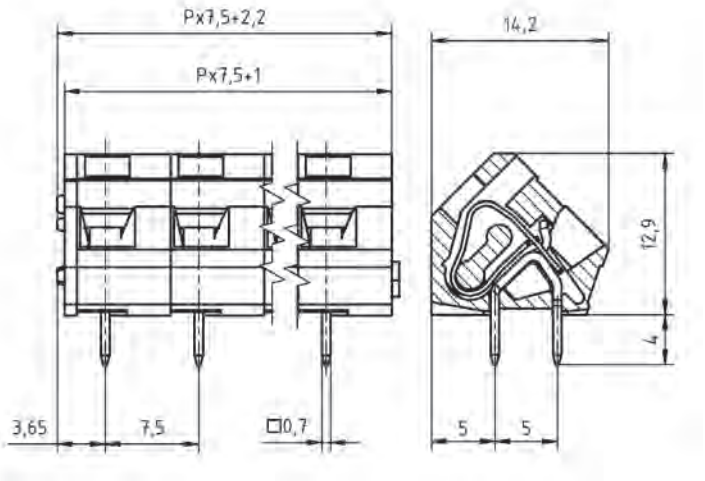

WIRE SIZES	
solid min	0.08 mm²
solid max	2.5 mm²
stranded min	0.14 mm²
stranded max	2.5 mm²
stranded with ferrule min	0.14 mm²
stranded with ferrule max	1.5 mm²
DIMENSIONS	
Stripped Length	6.0 mm
PCB Hole Diameter	1.1 mm
MATERIALS	
Solder Tab	Copper Alloy
Tension Spring	Stainless Steel
INSULATING MATERIAL	
Material	PA 6.6
Flammability Class	UL 94 V-0
TEMPERATURES	
Operating Temperature (without mech. load)	-40 °C - 105 °C
WAVE SOLDERING PROCESS	
Soldering Temperature, recommended	260 °C
Peak Soldering Time, recommended	3-4 s
REFLOW PROCESS	
Soldering Temperature, recommended	-
Peak Soldering Time, recommended	-

COLOURS[1]
PEBBLE GREY, RAL 7032

ACCESSORIES

	Description	Article Number
	Bridge, 2-pole, insulated, BRI/2-7.5/7.62-L8.2-LIGHT GREY	50000000017

ORDER DATA (SPACING 7.5 MM)

Poles	Width (mm)	Article Designation	Article Number	PU
1	9.70	AK3010/1-7.5-PEBBLE GREY	53010010001F	200
2	17.20	AK3010/2-7.5-PEBBLE GREY	53010020001E	100
3	24.70	AK3010/3-7.5-PEBBLE GREY	53010030001E	100
4	32.20	AK3010/4-7.5-PEBBLE GREY	53010040001E	100
5	39.70	AK3010/5-7.5-PEBBLE GREY	53010050001E	100
6	47.20	AK3010/6-7.5-PEBBLE GREY	53010060001D	50
7	54.70	AK3010/7-7.5-PEBBLE GREY	53010070001D	50
8	62.20	AK3010/8-7.5-PEBBLE GREY	53010080001D	50
9	69.70	AK3010/9-7.5-PEBBLE GREY	53010090001D	50
10	77.20	AK3010/10-7.5-PEBBLE GREY	53010100001D	50
11	84.70	AK3010/11-7.5-PEBBLE GREY	53010110001D	50
12	92.20	AK3010/12-7.5-PEBBLE GREY	53010120001D	50
13	99.70	AK3010/13-7.5-PEBBLE GREY	53010130001D	50
14	107.20	AK3010/14-7.5-PEBBLE GREY	53010140001D	50
15	114.70	AK3010/15-7.5-PEBBLE GREY	53010150001D	50
16	122.20	AK3010/16-7.5-PEBBLE GREY	53010160001D	50
17	129.70	AK3010/17-7.5-PEBBLE GREY	53010170001D	50
18	137.20	AK3010/18-7.5-PEBBLE GREY	53010180001D	50
19	144.70	AK3010/19-7.5-PEBBLE GREY	53010190001D	50
20	152.20	AK3010/20-7.5-PEBBLE GREY	53010200001D	50
21	159.70	AK3010/21-7.5-PEBBLE GREY	53010210001D	50
22	167.20	AK3010/22-7.5-PEBBLE GREY	53010220001D	50
23	174.70	AK3010/23-7.5-PEBBLE GREY	53010230001D	50
24	182.20	AK3010/24-7.5-PEBBLE GREY	53010240001D	50

RATINGS

	B	C	D		
Usegroup					
Rated Voltage	300 V	-	300 V	750 V	
Rated Current	15 A	-	10 A	24 A	
Rated Wire Size				min	max
solid	AWG 28-14	-	AWG 28-14	0.5 mm²	2.5 mm²
stranded	AWG 28-14	-	AWG 28-14	0.5 mm²	2.5 mm²
Test Voltage	1.6 kV	-	1.6 kV	3.0 kV	

[1]Colours according to RAL, there may be variations on colour due to production conditions. Special colours on request.

Spacing 7.5 mm / 1- to n-poles
Increase to spacing 7.62 mm by pulling on both ends

AK3011/..KD-7.5-PEBBLE GREY

WIRE SIZES	
solid min	0.08 mm²
solid max	2.5 mm²
stranded min	0.14 mm²
stranded max	2.5 mm²
stranded with ferrule min	0.14 mm²
stranded with ferrule max	1.5 mm²
DIMENSIONS	
Stripped Length	6.0 mm
PCB Hole Diameter	1.1 mm
MATERIALS	
Solder Tab	Copper Alloy
Tension Spring	Stainless Steel
INSULATING MATERIAL	
Material	PA 6.6
Flammability Class	UL 94 V-0
TEMPERATURES	
Operating Temperature (without mech. load)	-40 °C - 105 °C
WAVE SOLDERING PROCESS	
Soldering Temperature, recommended	260 °C
Peak Soldering Time, recommended	3-4 s
REFLOW PROCESS	
Soldering Temperature, recommended	-
Peak Soldering Time, recommended	-



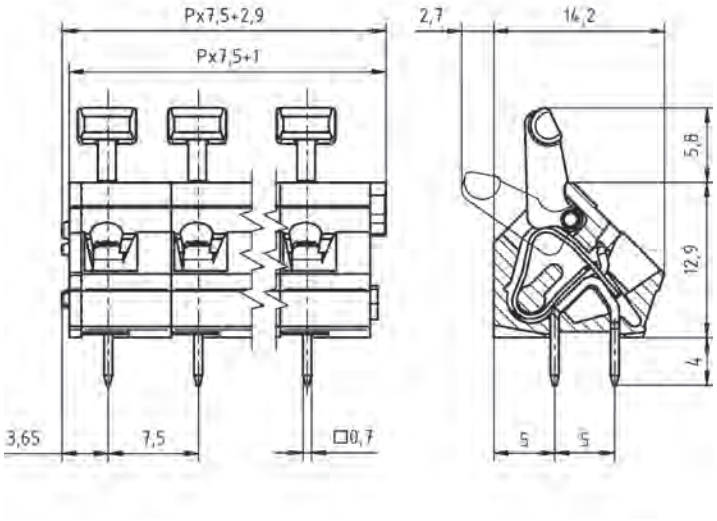

COLOURS[1]

PEBBLE GREY, RAL 7032

ORDER DATA (SPACING 7.5 MM)

Poles	Width (mm)	Article Designation	Article Number	PU
1	10.40	AK3011/1KD-7.5-PEBBLE GREY	53011010001F	200
2	17.90	AK3011/2KD-7.5-PEBBLE GREY	53011020001E	100
3	25.40	AK3011/3KD-7.5-PEBBLE GREY	53011030001E	100
4	32.90	AK3011/4KD-7.5-PEBBLE GREY	53011040001E	100
5	40.40	AK3011/5KD-7.5-PEBBLE GREY	53011050001E	100
6	47.90	AK3011/6KD-7.5-PEBBLE GREY	53011060001D	50
7	55.40	AK3011/7KD-7.5-PEBBLE GREY	53011070001D	50
8	62.90	AK3011/8KD-7.5-PEBBLE GREY	53011080001D	50
9	70.40	AK3011/9KD-7.5-PEBBLE GREY	53011090001D	50
10	77.90	AK3011/10KD-7.5-PEBBLE GREY	53011100001D	50
11	85.40	AK3011/11KD-7.5-PEBBLE GREY	53011110001D	50
12	92.90	AK3011/12KD-7.5-PEBBLE GREY	53011120001D	50
13	100.40	AK3011/13KD-7.5-PEBBLE GREY	53011130001D	50
14	107.90	AK3011/14KD-7.5-PEBBLE GREY	53011140001D	50
15	115.40	AK3011/15KD-7.5-PEBBLE GREY	53011150001D	50
16	122.90	AK3011/16KD-7.5-PEBBLE GREY	53011160001D	50
17	130.40	AK3011/17KD-7.5-PEBBLE GREY	53011170001D	50
18	137.90	AK3011/18KD-7.5-PEBBLE GREY	53011180001D	50
19	145.40	AK3011/19KD-7.5-PEBBLE GREY	53011190001D	50
20	152.90	AK3011/20KD-7.5-PEBBLE GREY	53011200001D	50
21	160.40	AK3011/21KD-7.5-PEBBLE GREY	53011210001D	50
22	167.90	AK3011/22KD-7.5-PEBBLE GREY	53011220001D	50
23	175.40	AK3011/23KD-7.5-PEBBLE GREY	53011230001D	50
24	182.90	AK3011/24KD-7.5-PEBBLE GREY	53011240001D	50

ACCESSORIES

	Description	Article Number
	Bridge, 2-pole, insulated, BRI/2-7.5/7.62-L8.2-LIGHT GREY	50000000017

RATINGS

	c UL us			VDE	
Usegroup	B	C	D		
Rated Voltage	300 V	-	300 V	750 V	
Rated Current	15 A	-	10 A	24 A	
Rated Wire Size				min	max
solid	AWG 28-14	-	AWG 28-14	0.5 mm²	2.5 mm²
stranded	AWG 28-14	-	AWG 28-14	0.5 mm²	2.5 mm²
Test Voltage	1.6 kV	-	1.6 kV	3.0 kV	

[1]Colours according to RAL, there may be variations on colour due to production conditions. Special colours on request.

L'IMPULSION
Retrouvez nous sur
www.limpulsion.fr

AK3011/..FD-7.5-PEBBLE GREY

Spacing 7.5 mm /1- to n-poles
Increase to spacing 7.62 mm by pulling on both ends



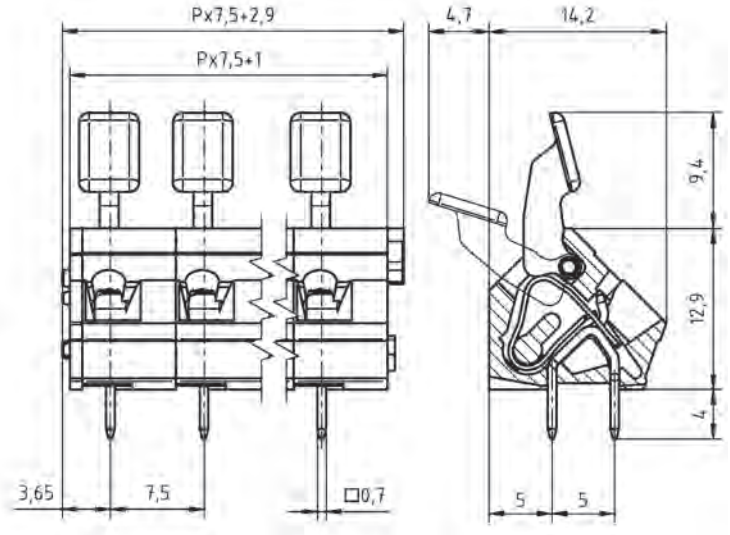

WIRE SIZES	
solid min	0.08 mm²
solid max	2.5 mm²
stranded min	0.14 mm²
stranded max	2.5 mm²
stranded with ferrule min	0.14 mm²
stranded with ferrule max	1.5 mm²
DIMENSIONS	
Stripped Length	6.0 mm
PCB Hole Diameter	1.1 mm
MATERIALS	
Solder Tab	Copper Alloy
Tension Spring	Stainless Steel
INSULATING MATERIAL	
Material	PA 6.6
Flammability Class	UL 94 V-0
TEMPERATURES	
Operating Temperature (without mech. load)	-40 °C - 105 °C
WAVE SOLDERING PROCESS	
Soldering Temperature, recommended	260 °C
Peak Soldering Time, recommended	3-4 s
REFLOW PROCESS	
Soldering Temperature, recommended	-
Peak Soldering Time, recommended	-

COLOURS[1]

PEBBLE GREY, RAL 7032

ACCESSORIES

	Description	Article Number
	Bridge, 2-pole, insulated, BRI/2-7.5/7.62-L8.2-LIGHT GREY	50000000017

RATINGS

	c UL us			VDE	
Usegroup	B	C	D		
Rated Voltage	300 V	-	300 V	750 V	
Rated Current	15 A	-	10 A	24 A	
Rated Wire Size				min	max
solid	AWG 28-14	-	AWG 28-14	0.5 mm²	2.5 mm²
stranded	AWG 28-14	-	AWG 28-14	0.5 mm²	2.5 mm²
Test Voltage	1.6 kV	-	1.6 kV	3.0 kV	

ORDER DATA (SPACING 7.5 MM)

Poles	Width (mm)	Article Designation	Article Number	PU
1	10.40	AK3011/1FD-7.5-PEBBLE GREY	53011010021F	200
2	17.90	AK3011/2FD-7.5-PEBBLE GREY	53011020021E	100
3	25.40	AK3011/3FD-7.5-PEBBLE GREY	53011030021E	100
4	32.90	AK3011/4FD-7.5-PEBBLE GREY	53011040021E	100
5	40.40	AK3011/5FD-7.5-PEBBLE GREY	53011050021E	100
6	47.90	AK3011/6FD-7.5-PEBBLE GREY	53011060021D	50
7	55.40	AK3011/7FD-7.5-PEBBLE GREY	53011070021D	50
8	62.90	AK3011/8FD-7.5-PEBBLE GREY	53011080021D	50
9	70.40	AK3011/9FD-7.5-PEBBLE GREY	53011090021D	50
10	77.90	AK3011/10FD-7.5-PEBBLE GREY	53011100021D	50
11	85.40	AK3011/11FD-7.5-PEBBLE GREY	53011110021D	50
12	92.90	AK3011/12FD-7.5-PEBBLE GREY	53011120021D	50
13	100.40	AK3011/13FD-7.5-PEBBLE GREY	53011130021D	50
14	107.90	AK3011/14FD-7.5-PEBBLE GREY	53011140021D	50
15	115.40	AK3011/15FD-7.5-PEBBLE GREY	53011150021D	50
16	122.90	AK3011/16FD-7.5-PEBBLE GREY	53011160021D	50
17	130.40	AK3011/17FD-7.5-PEBBLE GREY	53011170021D	50
18	137.90	AK3011/18FD-7.5-PEBBLE GREY	53011180021D	50
19	145.40	AK3011/19FD-7.5-PEBBLE GREY	53011190021D	50
20	152.90	AK3011/20FD-7.5-PEBBLE GREY	53011200021D	50
21	160.40	AK3011/21FD-7.5-PEBBLE GREY	53011210021D	50
22	167.90	AK3011/22FD-7.5-PEBBLE GREY	53011220021D	50
23	175.40	AK3011/23FD-7.5-PEBBLE GREY	53011230021D	50
24	182.90	AK3011/24FD-7.5-PEBBLE GREY	53011240021D	50

[1]Colours according to RAL, there may be variations on colour due to production conditions. Special colours on request.

Spacing 7.5 mm / 1- to n-poles
Increase to spacing 7.62 mm by pulling on both ends

AK3011/..WD-7.5-PEBBLE GREY

WIRE SIZES	
solid min	0.08 mm²
solid max	2.5 mm²
stranded min	0.14 mm²
stranded max	2.5 mm²
stranded with ferrule min	0.14 mm²
stranded with ferrule max	1.5 mm²
DIMENSIONS	
Stripped Length	6.0 mm
PCB Hole Diameter	1.1 mm
MATERIALS	
Solder Tab	Copper Alloy
Tension Spring	Stainless Steel
INSULATING MATERIAL	
Material	PA 6.6
Flammability Class	UL 94 V-0
TEMPERATURES	
Operating Temperature (without mech. load)	-40 °C - 105 °C
WAVE SOLDERING PROCESS	
Soldering Temperature, recommended	260 °C
Peak Soldering Time, recommended	3-4 s
REFLOW PROCESS	
Soldering Temperature, recommended	-
Peak Soldering Time, recommended	-



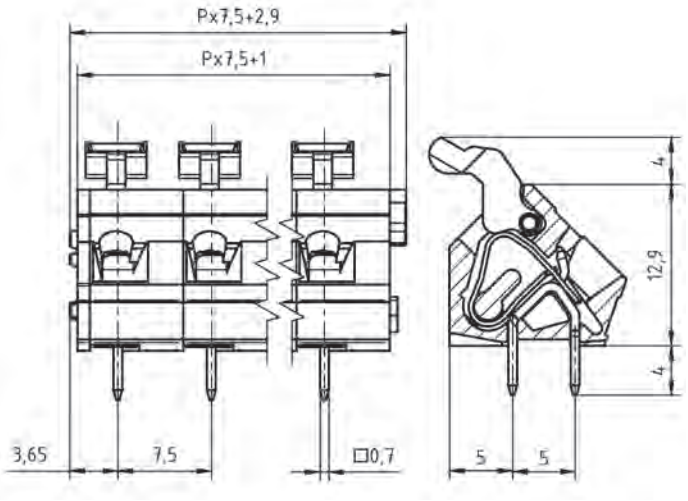

COLOURS[1]

PEBBLE GREY, RAL 7032

ORDER DATA (SPACING 7.5 MM)

Poles	Width (mm)	Article Designation	Article Number	PU
1	10.40	AK3011/1WD-7.5-PEBBLE GREY	53011010071F	200
2	17.90	AK3011/2WD-7.5-PEBBLE GREY	53011020071E	100
3	25.40	AK3011/3WD-7.5-PEBBLE GREY	53011030071E	100
4	32.90	AK3011/4WD-7.5-PEBBLE GREY	53011040071E	100
5	40.40	AK3011/5WD-7.5-PEBBLE GREY	53011050071E	100
6	47.90	AK3011/6WD-7.5-PEBBLE GREY	53011060071D	50
7	55.40	AK3011/7WD-7.5-PEBBLE GREY	53011070071D	50
8	62.90	AK3011/8WD-7.5-PEBBLE GREY	53011080071D	50
9	70.40	AK3011/9WD-7.5-PEBBLE GREY	53011090071D	50
10	77.90	AK3011/10WD-7.5-PEBBLE GREY	53011100071D	50
11	85.40	AK3011/11WD-7.5-PEBBLE GREY	53011110071D	50
12	92.90	AK3011/12WD-7.5-PEBBLE GREY	53011120071D	50
13	100.40	AK3011/13WD-7.5-PEBBLE GREY	53011130071D	50
14	107.90	AK3011/14WD-7.5-PEBBLE GREY	53011140071D	50
15	115.40	AK3011/15WD-7.5-PEBBLE GREY	53011150071D	50
16	122.90	AK3011/16WD-7.5-PEBBLE GREY	53011160071D	50
17	130.40	AK3011/17WD-7.5-PEBBLE GREY	53011170071D	50
18	137.90	AK3011/18WD-7.5-PEBBLE GREY	53011180071D	50
19	145.40	AK3011/19WD-7.5-PEBBLE GREY	53011190071D	50
20	152.90	AK3011/20WD-7.5-PEBBLE GREY	53011200071D	50
21	160.40	AK3011/21WD-7.5-PEBBLE GREY	53011210071D	50
22	167.90	AK3011/22WD-7.5-PEBBLE GREY	53011220071D	50
23	175.40	AK3011/23WD-7.5-PEBBLE GREY	53011230071D	50
24	182.90	AK3011/24WD-7.5-PEBBLE GREY	53011240071D	50

ACCESSORIES

	Description	Article Number
	Bridge, 2-pole, insulated, BRI/2-7.5/7.62-L8.2-LIGHT GREY	50000000017

RATINGS

	c UL us			VDE	
Usegroup	B	C	D		
Rated Voltage	300 V	-	300 V	750 V	
Rated Current	15 A	-	10 A	24 A	
Rated Wire Size				min	max
solid	AWG 28-14	-	AWG 28-14	0.5 mm²	2.5 mm²
stranded	AWG 28-14	-	AWG 28-14	0.5 mm²	2.5 mm²
Test Voltage	1.6 kV	-	1.6 kV	3.0 kV	

[1]Colours according to RAL, there may be variations on colour due to production conditions. Special colours on request.

L'IMPULSION
Retrouvez nous sur
www.limpulsion.fr

AK3000/..-10.0-PEBBLE GREY

Spacing 10.0 mm / 2- to n-poles
Increase to spacing 10.16 mm by pulling on both ends



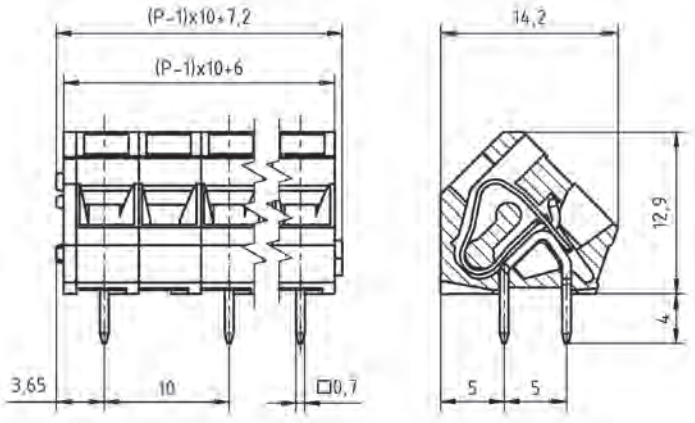

WIRE SIZES	
solid min	0.08 mm²
solid max	2.5 mm²
stranded min	0.14 mm²
stranded max	2.5 mm²
stranded with ferrule min	0.14 mm²
stranded with ferrule max	1.5 mm²
DIMENSIONS	
Stripped Length	6.0 mm
PCB Hole Diameter	1.1 mm
MATERIALS	
Solder Tab	Copper Alloy
Tension Spring	Stainless Steel
INSULATING MATERIAL	
Material	PA 6.6
Flammability Class	UL 94 V-0
TEMPERATURES	
Operating Temperature (without mech. load)	-40 °C - 105 °C
WAVE SOLDERING PROCESS	
Soldering Temperature, recommended	260 °C
Peak Soldering Time, recommended	3-4 s
REFLOW PROCESS	
Soldering Temperature, recommended	-
Peak Soldering Time, recommended	-

COLOURS[1]

PEBBLE GREY, RAL 7032		ORANGE, RAL 2011	
BLUE, RAL 5015		LIGHT GREEN, similar RAL 6018	

ORDER DATA (SPACING 10.0 MM)

Poles	Width (mm)	Article Designation	Article Number	PU
2	17.20	AK3000/2-10.0-PEBBLE GREY	53000020041E	100
3	27.20	AK3000/3-10.0-PEBBLE GREY	53000030041E	100
4	37.20	AK3000/4-10.0-PEBBLE GREY	53000040041E	100
5	47.20	AK3000/5-10.0-PEBBLE GREY	53000050041E	100
6	57.20	AK3000/6-10.0-PEBBLE GREY	53000060041D	50
7	67.20	AK3000/7-10.0-PEBBLE GREY	53000070041D	50
8	77.20	AK3000/8-10.0-PEBBLE GREY	53000080041D	50
9	87.20	AK3000/9-10.0-PEBBLE GREY	53000090041D	50
10	97.20	AK3000/10-10.0-PEBBLE GREY	53000100041D	50
11	107.20	AK3000/11-10.0-PEBBLE GREY	53000110041D	50
12	117.20	AK3000/12-10.0-PEBBLE GREY	53000120041D	50
13	127.20	AK3000/13-10.0-PEBBLE GREY	53000130041D	50
14	137.20	AK3000/14-10.0-PEBBLE GREY	53000140041D	50
15	147.20	AK3000/15-10.0-PEBBLE GREY	53000150041D	50
16	157.20	AK3000/16-10.0-PEBBLE GREY	53000160041D	50
17	167.20	AK3000/17-10.0-PEBBLE GREY	53000170041D	50
18	177.20	AK3000/18-10.0-PEBBLE GREY	53000180041D	50
19	187.20	AK3000/19-10.0-PEBBLE GREY	53000190041D	50
20	197.20	AK3000/20-10.0-PEBBLE GREY	53000200041D	50
21	207.20	AK3000/21-10.0-PEBBLE GREY	53000210041D	50
22	217.20	AK3000/22-10.0-PEBBLE GREY	53000220041D	50
23	227.20	AK3000/23-10.0-PEBBLE GREY	53000230041D	50
24	237.20	AK3000/24-10.0-PEBBLE GREY	53000240041D	50

RATINGS	c UL us			VDE	
Usegroup	B	C	D		
Rated Voltage	300 V	300 V	-	1.000 V	
Rated Current	15 A	15 A	-	24 A	
Rated Wire Size				min	max
solid	AWG 28-14	AWG 28-14	-	0.5 mm²	2.5 mm²
stranded	AWG 28-14	AWG 28-14	-	0.5 mm²	2.5 mm²
Test Voltage	1.6 kV	1.6 kV	-	3.5 kV	

[1]Colours according to RAL, there may be variations on colour due to production conditions. Special colours on request.

Spacing 10.0 mm / 2- to n-poles
Increase to spacing 10.16 mm by pulling on both ends

AK3001/..KD-10.0-PEBBLE GREY

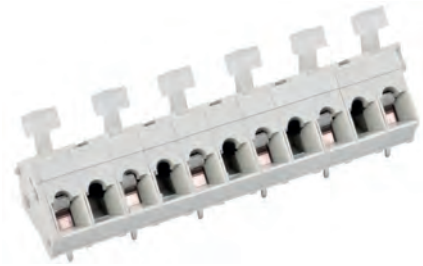

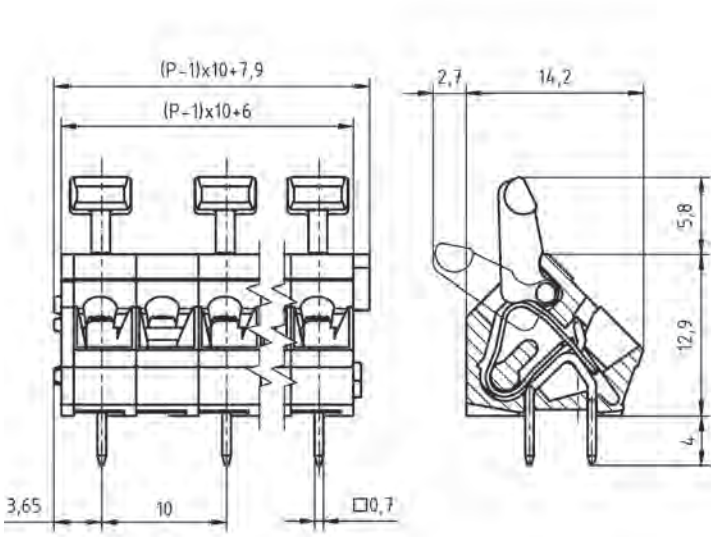

WIRE SIZES	
solid min	0.08 mm²
solid max	2.5 mm²
stranded min	0.14 mm²
stranded max	2.5 mm²
stranded with ferrule min	0.14 mm²
stranded with ferrule max	1.5 mm²
DIMENSIONS	
Stripped Length	6.0 mm
PCB Hole Diameter	1.1 mm
MATERIALS	
Solder Tab	Copper Alloy
Tension Spring	Stainless Steel
INSULATING MATERIAL	
Material	PA 6.6
Flammability Class	UL 94 V-0
TEMPERATURES	
Operating Temperature (without mech. load)	-40 °C - 105 °C
WAVE SOLDERING PROCESS	
Soldering Temperature, recommended	260 °C
Peak Soldering Time, recommended	3-4 s
REFLOW PROCESS	
Soldering Temperature, recommended	-
Peak Soldering Time, recommended	-

COLOURS[1]			
	PEBBLE GREY, RAL 7032		GREY, RAL 7016
	LIGHT GREEN, similar RAL 6018		GREEN, RAL 6018
	RED, RAL 3003		ORANGE, RAL 2011
	BLUE, RAL 5015		

ORDER DATA (SPACING 10.0 MM)

Poles	Width (mm)	Article Designation	Article Number	PU
2	17.90	AK3001/2KD-10.0-PEBBLE GREY	53001020041E	100
3	27.90	AK3001/3KD-10.0-PEBBLE GREY	53001030041E	100
4	37.90	AK3001/4KD-10.0-PEBBLE GREY	53001040041E	100
5	47.90	AK3001/5KD-10.0-PEBBLE GREY	53001050041E	100
6	57.90	AK3001/6KD-10.0-PEBBLE GREY	53001060041D	50
7	67.90	AK3001/7KD-10.0-PEBBLE GREY	53001070041D	50
8	77.90	AK3001/8KD-10.0-PEBBLE GREY	53001080041D	50
9	87.90	AK3001/9KD-10.0-PEBBLE GREY	53001090041D	50
10	97.90	AK3001/10KD-10.0-PEBBLE GREY	53001100041D	50
11	107.90	AK3001/11KD-10.0-PEBBLE GREY	53001110041D	50
12	117.90	AK3001/12KD-10.0-PEBBLE GREY	53001120041D	50
13	127.90	AK3001/13KD-10.0-PEBBLE GREY	53001130041D	50
14	137.90	AK3001/14KD-10.0-PEBBLE GREY	53001140041D	50
15	147.90	AK3001/15KD-10.0-PEBBLE GREY	53001150041D	50
16	157.90	AK3001/16KD-10.0-PEBBLE GREY	53001160041D	50
17	167.90	AK3001/17KD-10.0-PEBBLE GREY	53001170041D	50
18	177.90	AK3001/18KD-10.0-PEBBLE GREY	53001180041D	50
19	187.90	AK3001/19KD-10.0-PEBBLE GREY	53001190041D	50
20	197.90	AK3001/20KD-10.0-PEBBLE GREY	53001200041D	50
21	207.90	AK3001/21KD-10.0-PEBBLE GREY	53001210041D	50
22	217.90	AK3001/22KD-10.0-PEBBLE GREY	53001220041D	50
23	227.90	AK3001/23KD-10.0-PEBBLE GREY	53001230041D	50
24	237.90	AK3001/24KD-10.0-PEBBLE GREY	53001240041D	50

RATINGS	c UL us			VDE	
Usegroup	B	C	D		
Rated Voltage	300 V	300 V	-	1.000 V	
Rated Current	15 A	15 A	-	24 A	
Rated Wire Size				min	max
solid	AWG 28-14	AWG 28-14	-	0.5 mm²	2.5 mm²
stranded	AWG 28-14	AWG 28-14	-	0.5 mm²	2.5 mm²
Test Voltage	1.6 kV	1.6 kV	-	3.5 kV	

[1]Colours according to RAL, there may be variations on colour due to production conditions. Special colours on request.

L'IMPULSION
Retrouvez nous sur
www.limpulsion.fr

AK3001/..FD-10.0-PEBBLE GREY

Spacing 10.0 mm / 2- to n-poles
Increase to spacing 10.16 mm by pulling on both ends



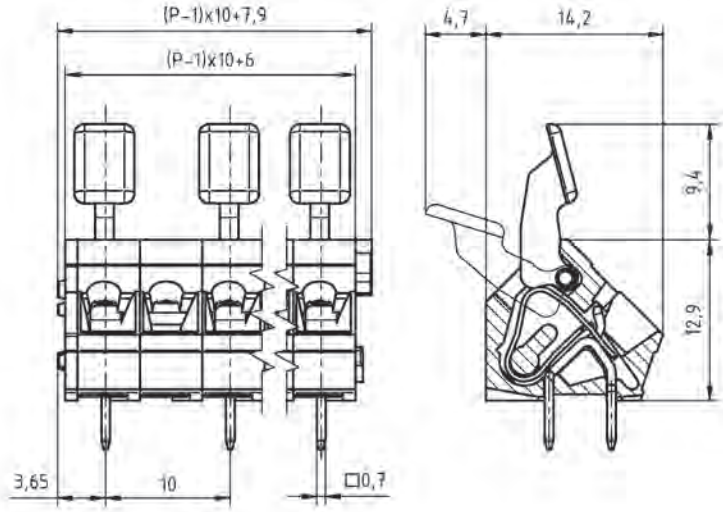

WIRE SIZES	
solid min	0.08 mm²
solid max	2.5 mm²
stranded min	0.14 mm²
stranded max	2.5 mm²
stranded with ferrule min	0.14 mm²
stranded with ferrule max	1.5 mm²
DIMENSIONS	
Stripped Length	6.0 mm
PCB Hole Diameter	1.1 mm
MATERIALS	
Solder Tab	Copper Alloy
Tension Spring	Stainless Steel
INSULATING MATERIAL	
Material	PA 6.6
Flammability Class	UL 94 V-0
TEMPERATURES	
Operating Temperature (without mech. load)	-40 °C - 105 °C
WAVE SOLDERING PROCESS	
Soldering Temperature, recommended	260 °C
Peak Soldering Time, recommended	3-4 s
REFLOW PROCESS	
Soldering Temperature, recommended	-
Peak Soldering Time, recommended	-

COLOURS[1]			
	PEBBLE GREY, RAL 7032		GREY, RAL 7016
	LIGHT GREEN, similar RAL 6018		GREEN, RAL 6018
	RED, RAL 3003		ORANGE, RAL 2011
	BLUE, RAL 5015		

RATINGS	cULus			VDE	
Usegroup	B	C	D		
Rated Voltage	300 V	300 V	-	1.000 V	
Rated Current	15 A	15 A	-	24 A	
Rated Wire Size				min	max
solid	AWG 28-14	AWG 28-14	-	0.5 mm²	2.5 mm²
stranded	AWG 28-14	AWG 28-14	-	0.5 mm²	2.5 mm²
Test Voltage	1.6 kV	1.6 kV	-	3.5 kV	

ORDER DATA (SPACING 10.0 MM)

Poles	Width (mm)	Article Designation	Article Number	PU
2	17.90	AK3001/2FD-10.0-PEBBLE GREY	53001020061E	100
3	27.90	AK3001/3FD-10.0-PEBBLE GREY	53001030061E	100
4	37.90	AK3001/4FD-10.0-PEBBLE GREY	53001040061E	100
5	47.90	AK3001/5FD-10.0-PEBBLE GREY	53001050061E	100
6	57.90	AK3001/6FD-10.0-PEBBLE GREY	53001060061D	50
7	67.90	AK3001/7FD-10.0-PEBBLE GREY	53001070061D	50
8	77.90	AK3001/8FD-10.0-PEBBLE GREY	53001080061D	50
9	87.90	AK3001/9FD-10.0-PEBBLE GREY	53001090061D	50
10	97.90	AK3001/10FD-10.0-PEBBLE GREY	53001100061D	50
11	107.90	AK3001/11FD-10.0-PEBBLE GREY	53001110061D	50
12	117.90	AK3001/12FD-10.0-PEBBLE GREY	53001120061D	50
13	127.90	AK3001/13FD-10.0-PEBBLE GREY	53001130061D	50
14	137.90	AK3001/14FD-10.0-PEBBLE GREY	53001140061D	50
15	147.90	AK3001/15FD-10.0-PEBBLE GREY	53001150061D	50
16	157.90	AK3001/16FD-10.0-PEBBLE GREY	53001160061D	50
17	167.90	AK3001/17FD-10.0-PEBBLE GREY	53001170061D	50
18	177.90	AK3001/18FD-10.0-PEBBLE GREY	53001180061D	50
19	187.90	AK3001/19FD-10.0-PEBBLE GREY	53001190061D	50
20	197.90	AK3001/20FD-10.0-PEBBLE GREY	53001200061D	50
21	207.90	AK3001/21FD-10.0-PEBBLE GREY	53001210061D	50
22	217.90	AK3001/22FD-10.0-PEBBLE GREY	53001220061D	50
23	227.90	AK3001/23FD-10.0-PEBBLE GREY	53001230061D	50
24	237.90	AK3001/24FD-10.0-PEBBLE GREY	53001240061D	50

[1]Colours according to RAL, there may be variations on colour due to production conditions. Special colours on request.

Spacing 10.0 mm 7 2- to n-poles
Increase to spacing 10.16 mm by pulling on both ends

AK3001/..WD-10.0-PEBBLE GREY



WIRE SIZES	
solid min	0.08 mm²
solid max	2.5 mm²
stranded min	0.14 mm²
stranded max	2.5 mm²
stranded with ferrule min	0.14 mm²
stranded with ferrule max	1.5 mm²
DIMENSIONS	
Stripped Length	6.0 mm
PCB Hole Diameter	1.1 mm
MATERIALS	
Solder Tab	Copper Alloy
Tension Spring	Stainless Steel
INSULATING MATERIAL	
Material	PA 6.6
Flammability Class	UL 94 V-0
TEMPERATURES	
Operating Temperature (without mech. load)	-40 °C - 105 °C
WAVE SOLDERING PROCESS	
Soldering Temperature, recommended	260 °C
Peak Soldering Time, recommended	3-4 s
REFLOW PROCESS	
Soldering Temperature, recommended	-
Peak Soldering Time, recommended	-

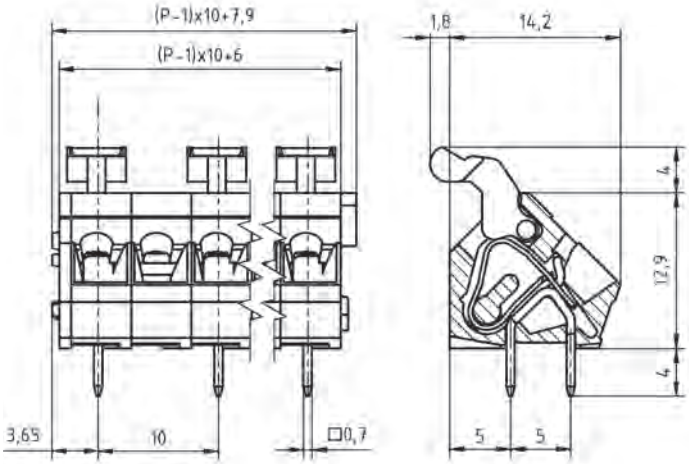

COLOURS[1]

	PEBBLE GREY, RAL 7032		GREY, RAL 7016
	LIGHT GREEN, similar RAL 6018		GREEN, RAL 6018
	RED, RAL 3003		ORANGE, RAL 2011
	BLUE, RAL 5015		

ORDER DATA (SPACING 10.0 MM)

Poles	Width (mm)	Article Designation	Article Number	PU
2	17.90	AK3001/2WD-10.0-PEBBLE GREY	53001020071E	100
3	27.90	AK3001/3WD-10.0-PEBBLE GREY	53001030071E	100
4	37.90	AK3001/4WD-10.0-PEBBLE GREY	53001040071E	100
5	47.90	AK3001/5WD-10.0-PEBBLE GREY	53001050071E	100
6	57.90	AK3001/6WD-10.0-PEBBLE GREY	53001060071D	50
7	67.90	AK3001/7WD-10.0-PEBBLE GREY	53001070071D	50
8	77.90	AK3001/8WD-10.0-PEBBLE GREY	53001080071D	50
9	87.90	AK3001/9WD-10.0-PEBBLE GREY	53001090071D	50
10	97.90	AK3001/10WD-10.0-PEBBLE GREY	53001100071D	50
11	107.90	AK3001/11WD-10.0-PEBBLE GREY	53001110071D	50
12	117.90	AK3001/12WD-10.0-PEBBLE GREY	53001120071D	50
13	127.90	AK3001/13WD-10.0-PEBBLE GREY	53001130071D	50
14	137.90	AK3001/14WD-10.0-PEBBLE GREY	53001140071D	50
15	147.90	AK3001/15WD-10.0-PEBBLE GREY	53001150071D	50
16	157.90	AK3001/16WD-10.0-PEBBLE GREY	53001160071D	50
17	167.90	AK3001/17WD-10.0-PEBBLE GREY	53001170071D	50
18	177.90	AK3001/18WD-10.0-PEBBLE GREY	53001180071D	50
19	187.90	AK3001/19WD-10.0-PEBBLE GREY	53001190071D	50
20	197.90	AK3001/20WD-10.0-PEBBLE GREY	53001200071D	50
21	207.90	AK3001/21WD-10.0-PEBBLE GREY	53001210071D	50
22	217.90	AK3001/22WD-10.0-PEBBLE GREY	53001220071D	50
23	227.90	AK3001/23WD-10.0-PEBBLE GREY	53001230071D	50
24	237.90	AK3001/24WD-10.0-PEBBLE GREY	53001240071D	50

RATINGS	c UL us			VDE	
Usegroup	B	C	D		
Rated Voltage	300 V	300 V	-	1.000 V	
Rated Current	15 A	15 A	-	24 A	
Rated Wire Size				min	max
solid	AWG 28-14	AWG 28-14	-	0.5 mm²	2.5 mm²
stranded	AWG 28-14	AWG 28-14	-	0.5 mm²	2.5 mm²
Test Voltage	1.6 kV	1.6 kV	-	3.5 kV	

[1]Colours according to RAL, there may be variations on colour due to production conditions. Special colours on request.

L'IMPULSION Retrouvez nous sur www.limpulsion.fr

PCB MULTI-CONNECTOR

A PCB multi-connector system consists of a pin strip which is fastened onto the PCB and the relevant PCB terminal block (also known as a socket terminal strip or connector). The PCB terminal blocks are divided into two groups - screw terminal blocks and spring terminal blocks.

Three connection types are available for the screw terminal blocks – the wire guard, the lift, and the excenter type. Normally, screw terminal blocks for PCB multi-connectors are manufactured as a block design and are available using the different connection types with spacing from 3.5 mm to 15.24 mm, metric or inches, and in various colours.

The group of spring terminal blocks is divided into PCB terminal blocks using the push-in design (leg spring technology) and the tension spring design. PCB terminal blocks which use the push-in design are manufactured in blocks, and the PCB terminal blocks which use the tension spring design are manufactured in layers. Spring terminal blocks using both connection types are available with spacing from 3.5 mm to 7.62 mm, metric or inches. Many series in the PCB multi-connectors are available in different colours.

All PCB multi-connector systems are PCB multi-connectors without breaking capacity (COC), and when used as intended, must not be connected or disconnected when under load or live. Wiring has to be done when multiconnectors are unplugged. If there are combinations with different ratings, the lower value is valid.

L'IMPULSION | Retrouvez nous sur www.limpulsion.fr

PCB MULTI-CONNECTOR	CLAMP TYPES	PAGE
Screw Terminal Blocks	Wire Guard	172
	Lift Type	181
	Excenter Type	208
Spring Terminal Blocks	Push-In Type	209
	Tension Spring Type	220
Pin Strips		221

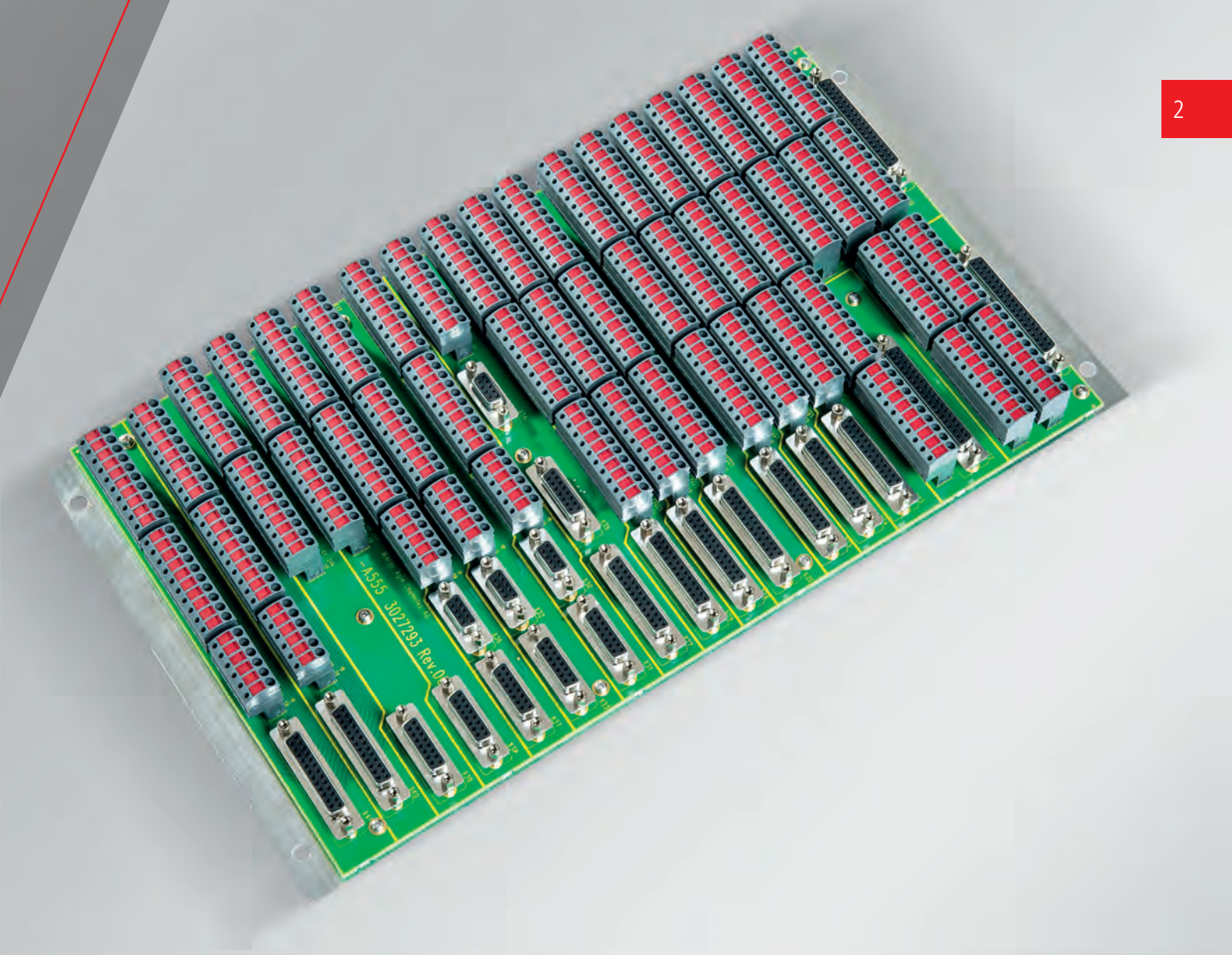

L'IMPULSION
Retrouvez nous sur
www.limpulsion.fr

AK1350/..DS-3.5-GREY

Spacing 3.5 mm



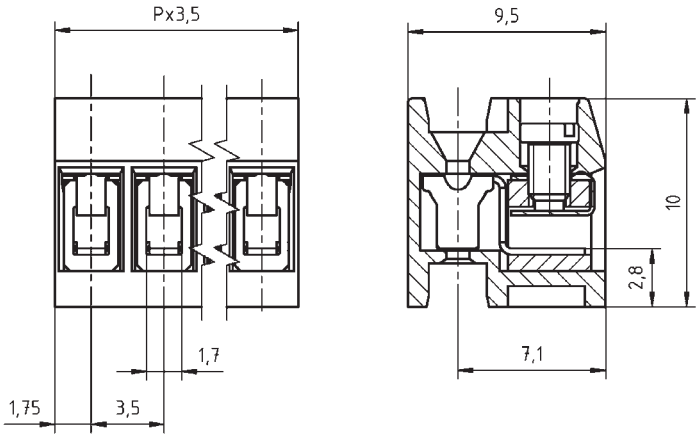

WIRE SIZES	
solid min	0.08 mm²
solid max	1.5 mm²
stranded min	0.08 mm²
stranded max	1.5 mm²
stranded with ferrule min	0.14 mm²
stranded with ferrule max	0.5 mm²
DIMENSIONS	
Stripped Length	5.0 mm
PCB Hole Diameter	-
MATERIALS	
Clamp	Brass
Wire Guard	Stainless Steel
Screw	Bronze
Contact Spring	Bronze
INSULATING MATERIAL	
Material	PA 6.6
Flammability Class	UL 94 V-0
TEMPERATURES	
Operating Temperature (without mech. load)	-40 °C - 105 °C
WAVE SOLDERING PROCESS	
Soldering Temperature, recommended	-
Peak Soldering Time, recommended	-
REFLOW PROCESS	
Soldering Temperature, recommended	-
Peak Soldering Time, recommended	-

COLOURS[1]

GREY, RAL 7016

LIGHT GREEN, similar RAL 6018

ACCESSORIES

	Description	Article Number
	Coding Cover CC-AK1350-GREY	51350000000
	Bridge, 2-pole, angled, BR/2-3.5/3.81-H-L4.7	50000000019
	Bridge, 2-pole, BR/2-3.5/3.81-L4.7	50000000013
	Bridge, 3-pole, BR/3-3.5/3.81-L4.7	50000000014

COUNTERPARTS (SPACING 3.5 MM)

Pin Strip

STL1350 STL1350-HT

ORDER DATA (SPACING 3.5 MM)

Poles	Width (mm)	Article Designation	Article Number	PU
2	7.00	AK1350/2DS-3.5-GREY	51350020001G	250
3	10.50	AK1350/3DS-3.5-GREY	51350030001G	250
4	14.00	AK1350/4DS-3.5-GREY	51350040001G	250
5	17.50	AK1350/5DS-3.5-GREY	51350050001G	250
6	21.00	AK1350/6DS-3.5-GREY	51350060001G	250
7	24.50	AK1350/7DS-3.5-GREY	51350070001G	250
8	28.00	AK1350/8DS-3.5-GREY	51350080001E	100
9	31.50	AK1350/9DS-3.5-GREY	51350090001E	100
10	35.00	AK1350/10DS-3.5-GREY	51350100001E	100
11	38.50	AK1350/11DS-3.5-GREY	51350110001E	100
12	42.00	AK1350/12DS-3.5-GREY	51350120001E	100

RATINGS

Usegroup	B	C	D		
Rated Voltage	150 V	-	-	125 V	
Rated Current	10 A	-	-	8 A	
Overvoltage Category				III	
Rated Wire Size				min	max
solid	AWG 28-16	-	-	0.2 mm² (4 A)	1.5 mm² (8 A)
stranded	AWG 28-16	-	-	0.2 mm² (4 A)	1.5 mm² (8 A)
Torque (in.lbs)	2.21	-	-	2.21	
Screw Size	M2	-	-	M2	
Test Voltage	1.3 kV	-	-	2.5 kV	
Pollution Degree				3	

[1]Colours according to RAL, there may be variations on colour due to production conditions. Special colours on request.

Spacing 3.5 mm

AK1350/..DS-3.5-GREY-CP

WIRE SIZES	
solid min	0.08 mm²
solid max	1.5 mm²
stranded min	0.08 mm²
stranded max	1.5 mm²
stranded with ferrule min	0.14 mm²
stranded with ferrule max	0.5 mm²
DIMENSIONS	
Stripped Length	5.0 mm
PCB Hole Diameter	-
MATERIALS	
Clamp	Brass
Wire Guard	Stainless Steel
Screw	Bronze
Contact Spring	Bronze
INSULATING MATERIAL	
Material	PA 6.6
Flammability Class	UL 94 V-0
TEMPERATURES	
Operating Temperature (without mech. load)	-40 °C - 105 °C
WAVE SOLDERING PROCESS	
Soldering Temperature, recommended	-
Peak Soldering Time, recommended	-
REFLOW PROCESS	
Soldering Temperature, recommended	-
Peak Soldering Time, recommended	-



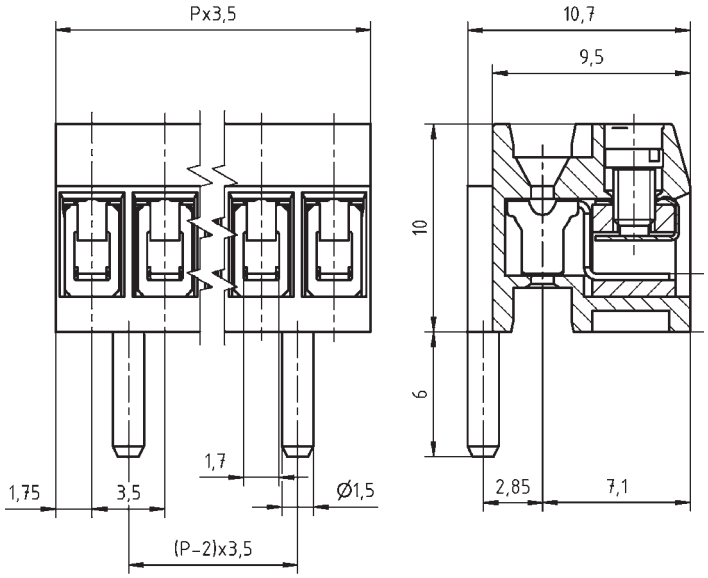

COLOURS[1]

GREY, RAL 7016

COUNTERPARTS (SPACING 3.5 MM)

Pin Strip

STL1350 STL1350-HT

ORDER DATA (SPACING 3.5 MM)

Poles	Width (mm)	Article Designation	Article Number	PU
2	7.00	AK1350/2DS-3.5-GREY-CP	51350020121G	250
3	10.50	AK1350/3DS-3.5-GREY-CP	51350030121G	250
4	14.00	AK1350/4DS-3.5-GREY-CP	51350040121G	250
5	17.50	AK1350/5DS-3.5-GREY-CP	51350050121G	250
6	21.00	AK1350/6DS-3.5-GREY-CP	51350060121G	250
7	24.50	AK1350/7DS-3.5-GREY-CP	51350070121G	250
8	28.00	AK1350/8DS-3.5-GREY-CP	51350080121E	100
9	31.50	AK1350/9DS-3.5-GREY-CP	51350090121E	100
10	35.00	AK1350/10DS-3.5-GREY-CP	51350100121E	100
11	38.50	AK1350/11DS-3.5-GREY-CP	51350110121E	100
12	42.00	AK1350/12DS-3.5-GREY-CP	51350120121E	100

ACCESSORIES

	Description	Article Number
	Coding Cover CC-AK1350-GREY	51350000000
	Bridge, 2-pole, angled, BR/2-3.5/3.81-H-L4.7	50000000019
	Bridge, 2-pole, BR/2-3.5/3.81-L4.7	50000000013
	Bridge, 3-pole, BR/3-3.5/3.81-L4.7	50000000014

RATINGS

	cULus			VDE	
Usegroup	B	C	D		
Rated Voltage	150 V	-	-	125 V	
Rated Current	10 A	-	-	8 A	
Overvoltage Category				III	
Rated Wire Size				min	max
solid	AWG 28-16	-	-	0.2 mm² (4 A)	1.5 mm² (8 A)
stranded	AWG 28-16	-	-	0.2 mm² (4 A)	1.5 mm² (8 A)
Torque (in.lbs)	2.21	-	-	2.21	
Screw Size	M2	-	-	M2	
Test Voltage	1.3 kV	-	-	2.5 kV	
Pollution Degree				3	

[1]Colours according to RAL, there may be variations on colour due to production conditions. Special colours on request.

L'IMPULSION
Retrouvez nous sur
www.limpulsion.fr

AK130/..-5.0-GREY

Spacing 5.0 mm



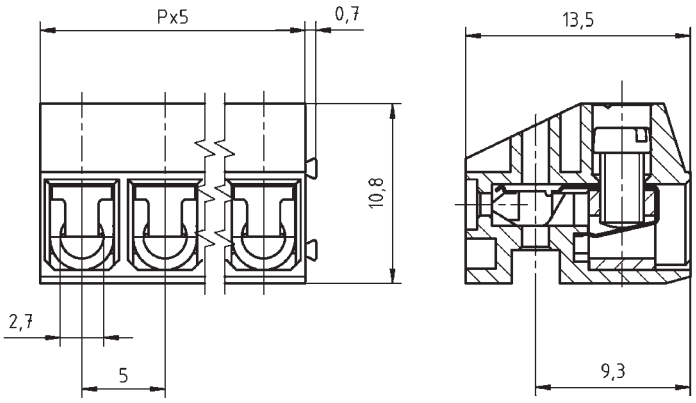

WIRE SIZES	
solid min	0.14 mm²
solid max	2.5 mm²
stranded min	0.14 mm²
stranded max	1.5 mm²
stranded with ferrule min	0.14 mm²
stranded with ferrule max	1.5 mm²
DIMENSIONS	
Stripped Length	6.0 mm
PCB Hole Diameter	-
MATERIALS	
Clamp	Brass
Screw	Steel
Contact Spring	Copper Alloy
INSULATING MATERIAL	
Material	PA 6.6
Flammability Class	UL 94 V-0
TEMPERATURES	
Operating Temperature (without mech. load)	-40 °C - 105 °C
WAVE SOLDERING PROCESS	
Soldering Temperature, recommended	-
Peak Soldering Time, recommended	-
REFLOW PROCESS	
Soldering Temperature, recommended	-
Peak Soldering Time, recommended	-

COLOURS[1]

GREY, RAL 7016	LIGHT GREY, RAL 7035
GREEN, RAL 6018	ORANGE, RAL 2011
RED, RAL 3003	BLUE, RAL 5015
YELLOW, RAL 1018	LIGHT GREEN, similar RAL 6018

ACCESSORIES

	Description	Article Number
	Bridge, 2-pole, insulated, BRI/2-5.0/5.08-LIGHT GREY	50000000006
	Bridge, 3-pole, insulated, BRI/3-5.0/5.08-LIGHT GREY	50000000007
	Bridge, 2-pole, BR/2-5.0/5.08-L7.0	50000000008

COUNTERPARTS (SPACING 5.0 MM)

Pin Strip

STL130 STL132 STL140

RATINGS

	cULus			VDE	
Usegroup	B	C	D		
Rated Voltage	300 V	150 V	300 V	250 V	
Rated Current	8 A	8 A	8 A	7 A	
Overvoltage Category				III	
Rated Wire Size				min	max
solid	AWG 22-12	AWG 22-12	AWG 22-12	0.5 mm² (5 A)	2.5 mm² (7 A)
stranded	AWG 22-14	AWG 22-14	AWG 22-14	0.5 mm² (5 A)	1.5 mm² (7 A)
Torque (in.lbs)	3.98	3.98	3.98	3.54	
Screw Size	M2.6	M2.6	M2.6	M2.6	
Test Voltage	1.6 kV	1.3 kV	1.6 kV	4.0 kV	
Pollution Degree				3	

ORDER DATA (SPACING 5.0 MM)

Poles	Width (mm)	Article Designation	Article Number	PU
2	10.70	AK130/2-5.0-GREY	50130020001G	250
3	15.70	AK130/3-5.0-GREY	50130030001G	250
4	20.70	AK130/4-5.0-GREY	50130040001G	250
5	25.70	AK130/5-5.0-GREY	50130050001G	250
6	30.70	AK130/6-5.0-GREY	50130060001G	250
7	35.70	AK130/7-5.0-GREY	50130070001G	250
8	40.70	AK130/8-5.0-GREY	50130080001E	100
9	45.70	AK130/9-5.0-GREY	50130090001E	100
10	50.70	AK130/10-5.0-GREY	50130100001E	100
11	55.70	AK130/11-5.0-GREY	50130110001E	100
12	60.70	AK130/12-5.0-GREY	50130120001E	100

[1]Colours according to RAL, there may be variations on colour due to production conditions. Special colours on request.

Spacing 5.0 mm

AK130/..-5.0-GREY-BR

WIRE SIZES	
solid min	0.14 mm²
solid max	2.5 mm²
stranded min	0.14 mm²
stranded max	1.5 mm²
stranded with ferrule min	0.14 mm²
stranded with ferrule max	1.5 mm²
DIMENSIONS	
Stripped Length	6.0 mm
PCB Hole Diameter	-
MATERIALS	
Clamp	Brass
Screw	Steel
Contact Spring	Copper Alloy
INSULATING MATERIAL	
Material	PA 6.6
Flammability Class	UL 94 V-0
TEMPERATURES	
Operating Temperature (without mech. load)	-40 °C - 105 °C
WAVE SOLDERING PROCESS	
Soldering Temperature, recommended	-
Peak Soldering Time, recommended	-
REFLOW PROCESS	
Soldering Temperature, recommended	-
Peak Soldering Time, recommended	-



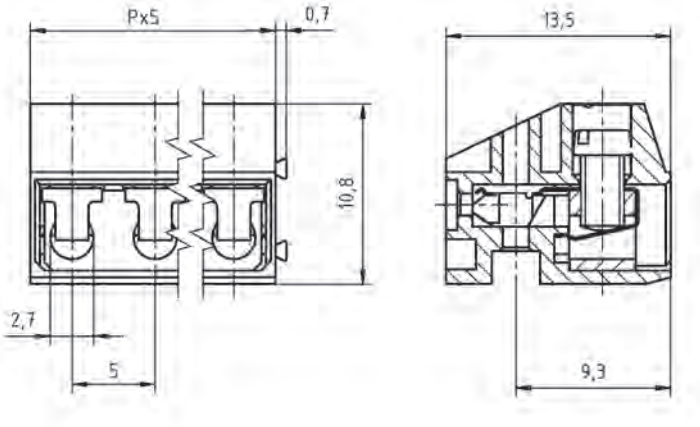

COLOURS[1]

GREY, RAL 7016		LIGHT GREY, RAL 7035	
GREEN, RAL 6018		ORANGE, RAL 2011	
RED, RAL 3003		BLUE, RAL 5015	
YELLOW, RAL 1018		LIGHT GREEN, similar RAL 6018	

COUNTERPARTS (SPACING 5.0 MM)

Pin Strip

STL130 STL132 STL140

ORDER DATA (SPACING 5.0 MM)

Poles	Width (mm)	Article Designation	Article Number	PU
2	10.70	AK130/2-5.0-GREY-BR	50130020045G	250

RATINGS	cULus			VDE	
Usegroup	B	C	D		
Rated Voltage	300 V	150 V	300 V	250 V	
Rated Current	8 A	8 A	8 A	7 A	
Overvoltage Category				III	
Rated Wire Size				min	max
solid	AWG 22-12	AWG 22-12	AWG 22-12	0.5 mm² (5 A)	2.5 mm² (7 A)
stranded	AWG 22-14	AWG 22-14	AWG 22-14	0.5 mm² (5 A)	1.5 mm² (7 A)
Torque (in.lbs)	3.98	3.98	3.98	3.54	
Screw Size	M2.6	M2.6	M2.6	M2.6	
Test Voltage	1.6 kV	1.3 kV	1.6 kV	4.0 kV	
Pollution Degree				3	

[1]Colours according to RAL, there may be variations on colour due to production conditions. Special colours on request.

L'IMPULSION
Retrouvez nous sur
www.limpulsion.fr

AK130/..-5.0-GREY-BL
AKZ130/..-5.08-GREY-BL

Spacing 5.0 mm / Spacing 5.08 mm



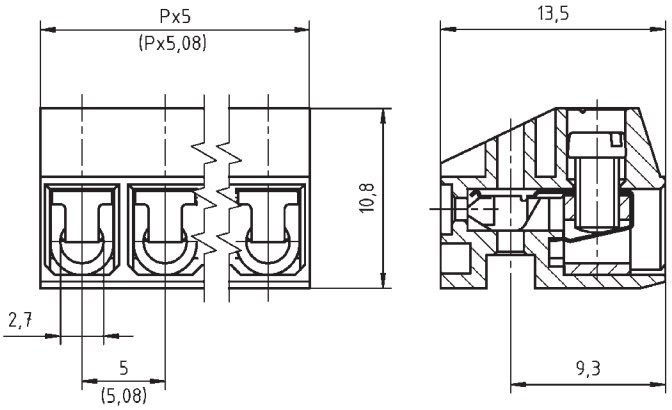

WIRE SIZES	
solid min	0.14 mm²
solid max	2.5 mm²
stranded min	0.14 mm²
stranded max	1.5 mm²
stranded with ferrule min	0.14 mm²
stranded with ferrule max	1.5 mm²
DIMENSIONS	
Stripped Length	6.0 mm
PCB Hole Diameter	-
MATERIALS	
Clamp	Brass
Screw	Steel
Contact Spring	Copper Alloy
INSULATING MATERIAL	
Material	PA 6.6
Flammability Class	UL 94 V-0
TEMPERATURES	
Operating Temperature (without mech. load)	-40 °C - 105 °C
WAVE SOLDERING PROCESS	
Soldering Temperature, recommended	-
Peak Soldering Time, recommended	-
REFLOW PROCESS	
Soldering Temperature, recommended	-
Peak Soldering Time, recommended	-

COLOURS[1]

GREY, RAL 7016

COUNTERPARTS (SPACING 5.0 MM)

Pin Strip

STL130 STL132 STL140

COUNTERPARTS (SPACING 5.08 MM)

Pin Strip

STLZ130 STLZ140

ACCESSORIES

	Description	Article Number
	Bridge, 2-pole, insulated, BRI/2-5.0/5.08-LIGHT GREY	50000000006
	Bridge, 3-pole, insulated, BRI/3-5.0/5.08-LIGHT GREY	50000000007
	Bridge, 2-pole, BR/2-5.0/5.08-L7.0	50000000008

ORDER DATA (SPACING 5.0 MM)

Poles	Width (mm)	Article Designation	Article Number	PU
2	10.00	AK130/2-5.0-GREY-BL	50130022001G	250
3	15.00	AK130/3-5.0-GREY-BL	50130032001G	250
4	20.00	AK130/4-5.0-GREY-BL	50130042001G	250
5	25.00	AK130/5-5.0-GREY-BL	50130052001G	250
6	30.00	AK130/6-5.0-GREY-BL	50130062001G	250
7	35.00	AK130/7-5.0-GREY-BL	50130072001G	250
8	40.00	AK130/8-5.0-GREY-BL	50130082001E	100
9	45.00	AK130/9-5.0-GREY-BL	50130092001E	100
...	...	...	...	...
16	80.00	AK130/16-5.0-GREY-BL	50130162001D	50

ORDER DATA (SPACING 5.08 MM)

Poles	Width (mm)	Article Designation	Article Number	PU
2	10.16	AKZ130/2-5.08-GREY-BL	50130022051G	250
3	15.24	AKZ130/3-5.08-GREY-BL	50130032051G	250
4	20.32	AKZ130/4-5.08-GREY-BL	50130042051G	250
5	25.40	AKZ130/5-5.08-GREY-BL	50130052051G	250
6	30.48	AKZ130/6-5.08-GREY-BL	50130062051G	250
7	35.56	AKZ130/7-5.08-GREY-BL	50130072051G	250
8	40.64	AKZ130/8-5.08-GREY-BL	50130082051E	100
9	45.72	AKZ130/9-5.08-GREY-BL	50130092051E	100
...	...	...	...	...
16	81.28	AKZ130/16-5.08-GREY-BL	50130162051D	50

RATINGS

	c UL us			VDE	
Usegroup	B	C	D		
Rated Voltage	300 V	150 V	300 V	250 V	
Rated Current	8 A	8 A	8 A	7 A	
Overvoltage Category				III	
Rated Wire Size				min	max
solid	AWG 22-12	AWG 22-12	AWG 22-12	0.5 mm² (5 A)	2.5 mm² (7 A)
stranded	AWG 22-14	AWG 22-14	AWG 22-14	0.5 mm² (5 A)	1.5 mm² (7 A)
Torque (in.lbs)	3.98	3.98	3.98	3.54	
Screw Size	M2.6	M2.6	M2.6	M2.6	
Test Voltage	1.6 kV	1.3 kV	1.6 kV	4.0 kV	
Pollution Degree				3	

[1]Colours according to RAL, there may be variations on colour due to production conditions. Special colours on request.

Spacing 5.0 mm

AK133/..DSLG-5.0-GREY

WIRE SIZES	
solid min	0.14 mm²
solid max	2.5 mm²
stranded min	0.14 mm²
stranded max	1.5 mm²
stranded with ferrule min	0.14 mm²
stranded with ferrule max	1.5 mm²
DIMENSIONS	
Stripped Length	6.0 mm
PCB Hole Diameter	-
MATERIALS	
Clamp	Brass
Screw	Steel
Contact Spring	Copper Alloy
INSULATING MATERIAL	
Material	PA 6.6
Flammability Class	UL 94 V-0
TEMPERATURES	
Operating Temperature (without mech. load)	-40 °C - 105 °C
WAVE SOLDERING PROCESS	
Soldering Temperature, recommended	-
Peak Soldering Time, recommended	-
REFLOW PROCESS	
Soldering Temperature, recommended	-
Peak Soldering Time, recommended	-



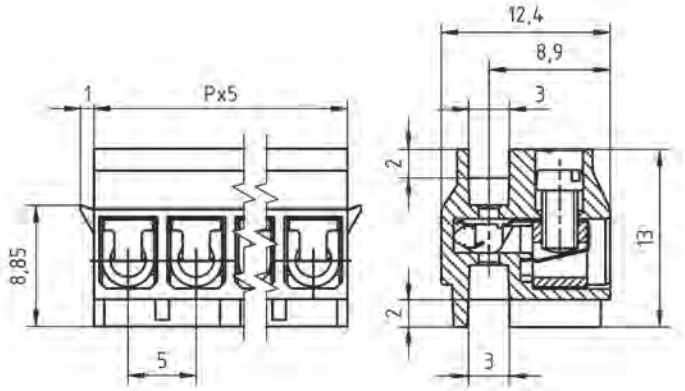

COLOURS[1]	
	GREY, RAL 7016

COUNTERPARTS (SPACING 5.0 MM)
Pin Strip
STL133

ACCESSORIES

	Description	Article Number
	Bridge, 2-pole, insulated, BRI/2-5.0/5.08-LIGHT GREY	50000000006
	Bridge, 3-pole, insulated, BRI/3-5.0/5.08-LIGHT GREY	50000000007
	Bridge, 2-pole, BR/2-5.0/5.08-L7.0	50000000008

ORDER DATA (SPACING 5.0 MM)

Poles	Width (mm)	Article Designation	Article Number	PU
2	12.00	AK133/2DSLG-5.0-GREY	50133020001G	250
3	17.00	AK133/3DSLG-5.0-GREY	50133030001G	250
4	22.00	AK133/4DSLG-5.0-GREY	50133040001G	250
5	27.00	AK133/5DSLG-5.0-GREY	50133050001G	250
6	32.00	AK133/6DSLG-5.0-GREY	50133060001G	250
7	37.00	AK133/7DSLG-5.0-GREY	50133070001G	250
8	42.00	AK133/8DSLG-5.0-GREY	50133080001E	100
9	47.00	AK133/9DSLG-5.0-GREY	50133090001E	100
10	52.00	AK133/10DSLG-5.0-GREY	50133100001E	100
11	57.00	AK133/11DSLG-5.0-GREY	50133110001E	100
12	62.00	AK133/12DSLG-5.0-GREY	50133120001E	100

RATINGS

	c UL us			VDE	
Usegroup	B	C	D		
Rated Voltage	300 V	-	300 V	250 V	
Rated Current	8 A	-	8 A	7 A	
Overvoltage Category				III	
Rated Wire Size				min	max
solid	AWG 22-12	-	AWG 22-12	0.5 mm² (5 A)	2.5 mm² (7 A)
stranded	AWG 22-14	-	AWG 22-14	0.5 mm² (5 A)	1.5 mm² (7 A)
Torque (in.lbs)	3.98	-	3.98	3.54	
Screw Size	M2.6	-	M2.6	M2.6	
Test Voltage	1.6 kV	-	1.6 kV	4.0 kV	
Pollution Degree				3	

[1]Colours according to RAL, there may be variations on colour due to production conditions. Special colours on request.

L'IMPULSION
Retrouvez nous sur
www.limpulsion.fr

NEW

AK136/..DSLGB-5.0-BLACK

Spacing 5.0 mm



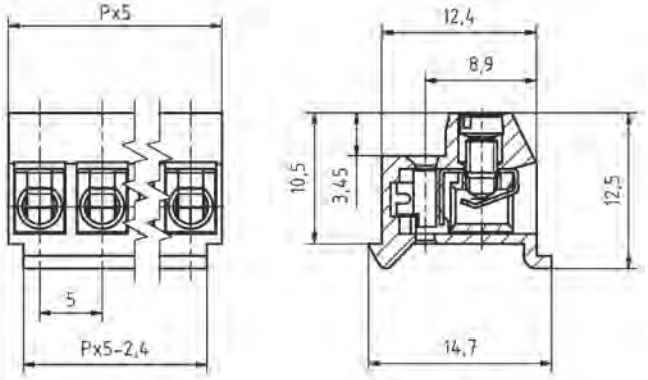

WIRE SIZES	
solid min	0.2 mm²
solid max	2.5 mm²
stranded min	0.2 mm²
stranded max	1.5 mm²
stranded with ferrule min	0.2 mm²
stranded with ferrule max	1.5 mm²
DIMENSIONS	
Stripped Length	6.0 mm
PCB Hole Diameter	-
MATERIALS	
Clamp	Brass
Screw	Steel
Contact Spring	Copper Alloy
INSULATING MATERIAL	
Material	PA 6.6
Flammability Class	UL 94 V-0
TEMPERATURES	
Operating Temperature (without mech. load)	-40 °C - 105 °C
WAVE SOLDERING PROCESS	
Soldering Temperature, recommended	-
Peak Soldering Time, recommended	-
REFLOW PROCESS	
Soldering Temperature, recommended	-
Peak Soldering Time, recommended	-

COLOURS[1]	
■	BLACK, RAL 9011

COUNTERPARTS (SPACING 5.0 MM)
Pin Strip
STL136

ORDER DATA (SPACING 5.0 MM)

Poles	Width (mm)	Article Designation	Article Number	PU
2	5.00	AK136/2DSLGB-5.0-BLACK	50136020001G	250
3	10.00	AK136/3DSLGB-5.0-BLACK	50136030001G	250
4	15.00	AK136/4DSLGB-5.0-BLACK	50136040001G	250
5	20.00	AK136/5DSLGB-5.0-BLACK	50136050001G	250
6	25.00	AK136/6DSLGB-5.0-BLACK	50136060001G	250
7	30.00	AK136/7DSLGB-5.0-BLACK	50136070001G	250
8	35.00	AK136/8DSLGB-5.0-BLACK	50136080001E	100
9	40.00	AK136/9DSLGB-5.0-BLACK	50136090001E	100
10	45.00	AK136/10DSLGB-5.0-BLACK	50136100001E	100
11	50.00	AK136/11DSLGB-5.0-BLACK	50136110001E	100
12	55.00	AK136/12DSLGB-5.0-BLACK	50136120001E	100

RATINGS	c UL us			VDE*	
Usegroup	B	C	D		
Rated Voltage	300 V	150 V	300 V	250 V	
Rated Current	8 A	8 A	8 A	7 A	
Overvoltage Category				III	
Rated Wire Size				min	max
solid	AWG 26-14	AWG 26-14	AWG 26-14	0.2 mm²	2.5 mm²
stranded	AWG 26-14	AWG 26-14	AWG 26-14	0.2 mm²	1.5 mm²
Torque (in.lbs)	3.54	3.54	3.54	3.54	
Screw Size	M2.6	M2.6	M2.6	M2.6	
Test Voltage	1.6 kV	1.3 kV	1.6 kV	2.5 kV	
Pollution Degree				3	

*Approval Pending

[1]Colours according to RAL, there may be variations on colour due to production conditions. Special colours on request.

Spacing 10.0 mm

AK130/..-10.0-GREY

WIRE SIZES	
solid min	0.14 mm²
solid max	2.5 mm²
stranded min	0.14 mm²
stranded max	1.5 mm²
stranded with ferrule min	0.14 mm²
stranded with ferrule max	1.5 mm²
DIMENSIONS	
Stripped Length	6.0 mm
PCB Hole Diameter	-
MATERIALS	
Clamp	Brass
Screw	Steel
Contact Spring	Copper Alloy
INSULATING MATERIAL	
Material	PA 6.6
Flammability Class	UL 94 V-0
TEMPERATURES	
Operating Temperature (without mech. load)	-40 °C - 105 °C
WAVE SOLDERING PROCESS	
Soldering Temperature, recommended	-
Peak Soldering Time, recommended	-
REFLOW PROCESS	
Soldering Temperature, recommended	-
Peak Soldering Time, recommended	-



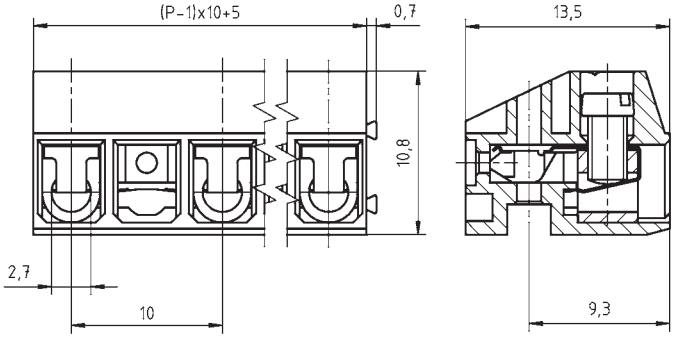

COLOURS[1]

GREY, RAL 7016		LIGHT GREY, RAL 7035	
GREEN, RAL 6018		ORANGE, RAL 2011	
RED, RAL 3003		BLUE, RAL 5015	
YELLOW, RAL 1018		LIGHT GREEN, similar RAL 6018	

COUNTERPARTS (SPACING 10.0 MM

Pin Strip

STL130 STL132 STL140

ORDER DATA (SPACING 10.0 MM)

Poles	Width (mm)	Article Designation	Article Number	PU
2	15.70	AK130/2-10.0-GREY	50130020021G	250
3	25.70	AK130/3-10.0-GREY	50130030021G	250
4	35.70	AK130/4-10.0-GREY	50130040021G	250
5	45.70	AK130/5-10.0-GREY	50130050021E	100
6	55.70	AK130/6-10.0-GREY	50130060021E	100

RATINGS	c UL us			VDE	
Usegroup	B	C	D		
Rated Voltage	300 V	150 V	300 V	630 V	
Rated Current	8 A	8 A	8 A	7 A	
Overvoltage Category				III	
Rated Wire Size				min	max
solid	AWG 22-12	AWG 22-12	AWG 22-12	0.5 mm² (5 A)	2.5 mm² (7 A)
stranded	AWG 22-14	AWG 22-14	AWG 22-14	0.5 mm² (5 A)	1.5 mm² (7 A)
Torque (in.lbs)	3.98	3.98	3.98	3.54	
Screw Size	M2.6	M2.6	M2.6	M2.6	
Test Voltage	1.6 kV	1.3 kV	1.6 kV	6.0 kV	
Pollution Degree				3	

[1]Colours according to RAL, there may be variations on colour due to production conditions. Special colours on request.

L'IMPULSION
Retrouvez nous sur
www.limpulsion.fr

AK130/..-10.0-GREY-BL
AKZ130/..-10.16-GREY-BL

Spacing 10.0 mm / Spacing 10.16 mm



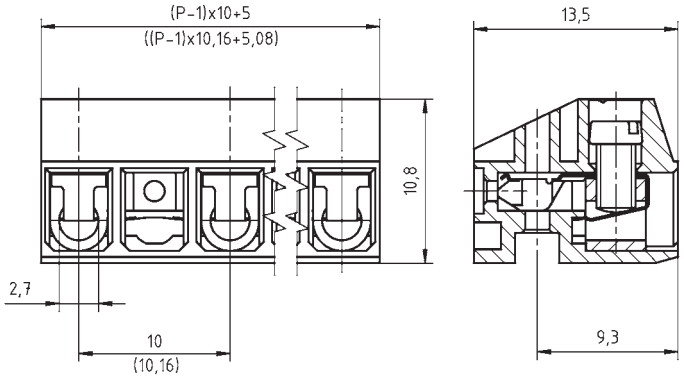

WIRE SIZES	
solid min	0.14 mm²
solid max	2.5 mm²
stranded min	0.14 mm²
stranded max	1.5 mm²
stranded with ferrule min	0.14 mm²
stranded with ferrule max	1.5 mm²
DIMENSIONS	
Stripped Length	6.0 mm
PCB Hole Diameter	-
MATERIALS	
Clamp	Brass
Screw	Steel
Contact Spring	Copper Alloy
INSULATING MATERIAL	
Material	PA 6.6
Flammability Class	UL 94 V-0
TEMPERATURES	
Operating Temperature (without mech. load)	-40 °C - 105 °C
WAVE SOLDERING PROCESS	
Soldering Temperature, recommended	-
Peak Soldering Time, recommended	-
REFLOW PROCESS	
Soldering Temperature, recommended	-
Peak Soldering Time, recommended	-

COLOURS[1]	
	GREY, RAL 7016

COUNTERPARTS (SPACING 10.0 MM
Pin Strip
STL130 STL132 STL140

COUNTERPARTS (SPACING 10.16 MM
Pin Strip
STLZ130 STLZ140

ORDER DATA (SPACING 10.0 MM)

Poles	Width (mm)	Article Designation	Article Number	PU
2	15.00	AK130/2-10.0-GREY-BL	50130022021G	250
3	25.00	AK130/3-10.0-GREY-BL	50130032021G	250
4	35.00	AK130/4-10.0-GREY-BL	50130042021G	250
5	45.00	AK130/5-10.0-GREY-BL	50130052021E	100
6	55.00	AK130/6-10.0-GREY-BL	50130062021E	100

ORDER DATA (SPACING 10.16 MM)

Poles	Width (mm)	Article Designation	Article Number	PU
2	15.24	AKZ130/2-10.16-GREY-BL	50130022071G	250
3	25.40	AKZ130/3-10.16-GREY-BL	50130032071G	250
4	35.56	AKZ130/4-10.16-GREY-BL	50130042071G	250
5	45.72	AKZ130/5-10.16-GREY-BL	50130052071E	100
6	55.88	AKZ130/6-10.16-GREY-BL	50130062071E	100

RATINGS	c UL us			VDE	
Usegroup	B	C	D		
Rated Voltage	300 V	150 V	300 V	630 V	
Rated Current	8 A	8 A	8 A	7 A	
Overvoltage Category				III	
Rated Wire Size				min	max
solid	AWG 22-12	AWG 22-12	AWG 22-12	0.5 mm² (5 A)	2.5 mm² (7 A)
stranded	AWG 22-14	AWG 22-14	AWG 22-14	0.5 mm² (5 A)	1.5 mm² (7 A)
Torque (in.lbs)	3.98	3.98	3.98	3.54	
Screw Size	M2.6	M2.6	M2.6	M2.6	
Test Voltage	1.6 kV	1.3 kV	1.6 kV	6.0 kV	
Pollution Degree				3	

[1]Colours according to RAL, there may be variations on colour due to production conditions. Special colours on request.

Spacing 3.5 mm / Spacing 3.81 mm

AK1550/..-3.5-GREEN
AKZ1550/..-3.81-GREEN

WIRE SIZES	
solid min	0.14 mm²
solid max	1.5 mm²
stranded min	0.14 mm²
stranded max	1.5 mm²
stranded with ferrule min	0.25 mm²
stranded with ferrule max	1.0 mm²
DIMENSIONS	
Stripped Length	7.0 mm
PCB Hole Diameter	-
MATERIALS	
Clamp	Brass
Screw	Bronze
Contact Spring	Bronze
INSULATING MATERIAL	
Material	PA 6.6
Flammability Class	UL 94 V-0
TEMPERATURES	
Operating Temperature (without mech. load)	-40 °C - 105 °C
WAVE SOLDERING PROCESS	
Soldering Temperature, recommended	-
Peak Soldering Time, recommended	-
REFLOW PROCESS	
Soldering Temperature, recommended	-
Peak Soldering Time, recommended	-



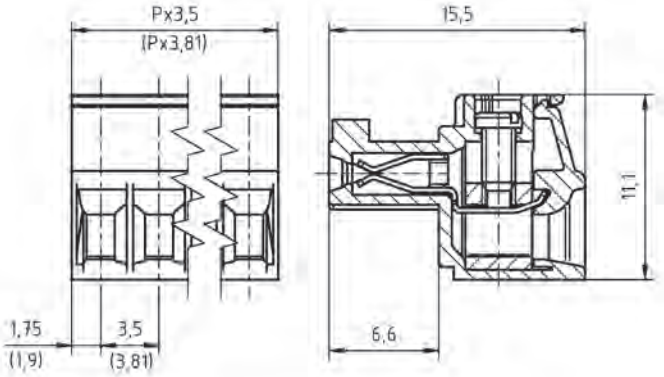

COLOURS[1]

GREEN, RAL 6018		BLACK, RAL 9011	
BLUE, RAL 5015		LIGHT GREEN, similar RAL 6018	

COUNTERPARTS (SPACING 3.5 MM)

Pin Strip

STL1550

COUNTERPARTS (SPACING 3.81 MM)

Pin Strip

STLZ1550 STLZ1570 STLZ1590

ORDER DATA (SPACING 3.5 MM)

Poles	Width (mm)	Article Designation	Article Number	PU
2	7.00	AK1550/2-3.5-GREEN	51550020001F	200
3	10.50	AK1550/3-3.5-GREEN	51550030001F	200
4	14.00	AK1550/4-3.5-GREEN	51550040001F	200
5	17.50	AK1550/5-3.5-GREEN	51550050001F	200
6	21.00	AK1550/6-3.5-GREEN	51550060001E	100
7	24.50	AK1550/7-3.5-GREEN	51550070001E	100
8	28.00	AK1550/8-3.5-GREEN	51550080001D	50
9	31.50	AK1550/9-3.5-GREEN	51550090001D	50
...	...	...	...	...
20	70.00	AK1550/20-3.5-GREEN	51550200001D	50

ORDER DATA (SPACING 3.81 MM)

Poles	Width (mm)	Article Designation	Article Number	PU
2	7.62	AKZ1550/2-3.81-GREEN	51550020025F	200
3	11.43	AKZ1550/3-3.81-GREEN	51550030025F	200
4	15.24	AKZ1550/4-3.81-GREEN	51550040025F	200
5	19.05	AKZ1550/5-3.81-GREEN	51550050025F	200
6	22.86	AKZ1550/6-3.81-GREEN	51550060025E	100
7	26.67	AKZ1550/7-3.81-GREEN	51550070025E	100
8	30.48	AKZ1550/8-3.81-GREEN	51550080025D	50
9	34.29	AKZ1550/9-3.81-GREEN	51550090025D	50
...	...	...	...	...
20	76.20	AKZ1550/20-3.81-GREEN	51550200025D	50

ACCESSORIES

	Description	Article Number
	Series AK(Z)1550 with pull relief	on request
	Bridge, 2-pole, BR/2-3.5/3.81-L7.5	50000000015
	Bridge, 3-pole, BR/3-3.5/3.81-L7.5	50000000016
	Bridge, 2-pole, insulated, BRI/2-7.0/7.62-L7.5-LIGHT GREY	50000000018

RATINGS	cULus			VDE	
Usegroup	B	C	D		
Rated Voltage	300 V	-	300 V	160 V	
Rated Current	8 A	-	8 A	8 A	
Overvoltage Category				III	
Rated Wire Size				min	max
solid	AWG 28-16	-	AWG 28-16	0.5 mm² (6 A)	1.5 mm² (8 A)
stranded	AWG 28-16	-	AWG 28-16	0.5 mm² (6 A)	1.5 mm² (8 A)
Torque (in.lbs)	2.21	-	2.21	2.21	
Screw Size	M2	-	M2	M2	
Test Voltage	1.6 kV	-	1.6 kV	2.5 kV	
Pollution Degree				3	

[1]Colours according to RAL, there may be variations on colour due to production conditions. Special colours on request.

L'IMPULSION
Retrouvez nous sur
www.limpulsion.fr

AK1550/..F-3.5-GREEN
AKZ1550/..F-3.81-GREEN

Spacing 3.5 mm / Spacing 3.81 mm



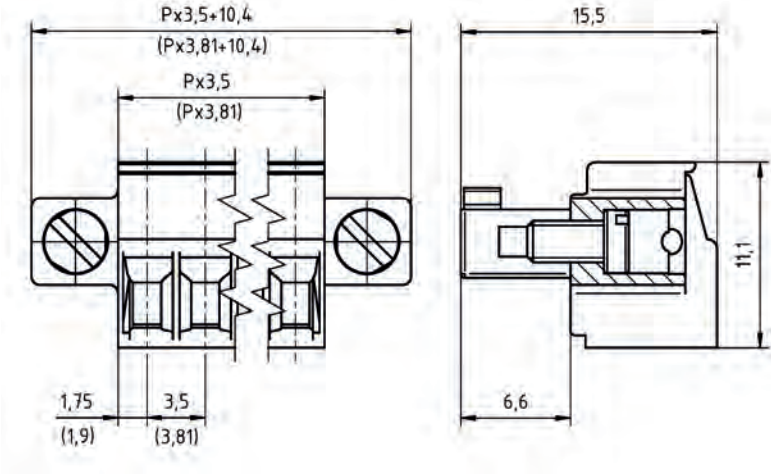

WIRE SIZES	
solid min	0.14 mm²
solid max	1.5 mm²
stranded min	0.14 mm²
stranded max	1.5 mm²
stranded with ferrule min	0.25 mm²
stranded with ferrule max	1.0 mm²
DIMENSIONS	
Stripped Length	7.0 mm
PCB Hole Diameter	-
MATERIALS	
Clamp	Brass
Screw	Bronze
Screw, Flange	Steel
Contact Spring	Bronze
INSULATING MATERIAL	
Material	PA 6.6
Flammability Class	UL 94 V-0
TEMPERATURES	
Operating Temperature (without mech. load)	-40 °C - 105 °C
WAVE SOLDERING PROCESS	
Soldering Temperature, recommended	-
Peak Soldering Time, recommended	-
REFLOW PROCESS	
Soldering Temperature, recommended	-
Peak Soldering Time, recommended	-

COLOURS[1]

GREEN, RAL 6018 — BLACK, RAL 9011

LIGHT GREEN, similar RAL 6018

COUNTERPARTS (SPACING 3.5 MM)

Pin Strip

STL1550

COUNTERPARTS (SPACING 3.81 MM)

Pin Strip

STLZ1550 STLZ1570

ACCESSORIES

	Description	Article Number
	Series AK(Z)1550 with pull relief	on request
	Bridge, 2-pole, BR/2-3.5/3.81-L7.5	50000000015
	Bridge, 3-pole, BR/3-3.5/3.81-L7.5	50000000016
	Bridge, 2-pole, insulated, BRI/2-7.0/7.62-L7.5-LIGHT GREY	50000000018

ORDER DATA (SPACING 3.5 MM)

Poles	Width (mm)	Article Designation	Article Number	PU
2	17.40	AK1550/2F-3.5-GREEN	51550022001F	200
3	20.90	AK1550/3F-3.5-GREEN	51550032001F	200
4	24.40	AK1550/4F-3.5-GREEN	51550042001F	200
5	27.90	AK1550/5F-3.5-GREEN	51550052001F	200
6	31.40	AK1550/6F-3.5-GREEN	51550062001E	100
7	34.90	AK1550/7F-3.5-GREEN	51550072001D	50
8	38.40	AK1550/8F-3.5-GREEN	51550082001D	50
9	41.90	AK1550/9F-3.5-GREEN	51550092001D	50
...	...	...	...	...
20	80.40	AK1550/20F-3.5-GREEN	51550202001D	50

ORDER DATA (SPACING 3.81 MM)

Poles	Width (mm)	Article Designation	Article Number	PU
2	17.22	AKZ1550/2F-3.81-GREEN	51550022025F	200
3	21.03	AKZ1550/3F-3.81-GREEN	51550032025F	200
4	24.84	AKZ1550/4F-3.81-GREEN	51550042025F	200
5	28.65	AKZ1550/5F-3.81-GREEN	51550052025F	200
6	32.46	AKZ1550/6F-3.81-GREEN	51550062025E	100
7	36.27	AKZ1550/7F-3.81-GREEN	51550072025D	50
8	40.08	AKZ1550/8F-3.81-GREEN	51550082025D	50
9	43.89	AKZ1550/9F-3.81-GREEN	51550092025D	50
...	...	...	...	...
20	85.80	AKZ1550/20F-3.81-GREEN	51550202025D	50

RATINGS

	c UL us			VDE	
Usegroup	B	C	D		
Rated Voltage	300 V	-	300 V	160 V	
Rated Current	8 A	-	8 A	8 A	
Overvoltage Category				III	
Rated Wire Size				min	max
solid	AWG 28-16	-	AWG 28-16	0.5 mm² (6 A)	1.5 mm² (8 A)
stranded	AWG 28-16	-	AWG 28-16	0.5 mm² (6 A)	1.5 mm² (8 A)
Torque (in.lbs)	2.21	-	2.21	2.21	
Screw Size	M2	-	M2	M2	
Test Voltage	1.6 kV	-	1.6 kV	2.5 kV	
Pollution Degree				3	

[1]Colours according to RAL, there may be variations on colour due to production conditions. Special colours on request.

Spacing 3.5 mm / Spacing 3.81 mm

AK1700/..-3.5-GREEN
AKZ1700/..-3.81-GREEN

WIRE SIZES	
solid min	0.14 mm²
solid max	1.5 mm²
stranded min	0.14 mm²
stranded max	1.5 mm²
stranded with ferrule min	0.25 mm²
stranded with ferrule max	1.0 mm²
DIMENSIONS	
Stripped Length	7.0 mm
PCB Hole Diameter	-
MATERIALS	
Clamp	Brass
Screw	Bronze
Contact Spring	Bronze
INSULATING MATERIAL	
Material	PA 6.6
Flammability Class	UL 94 V-0
TEMPERATURES	
Operating Temperature (without mech. load)	-40 °C - 105 °C
WAVE SOLDERING PROCESS	
Soldering Temperature, recommended	-
Peak Soldering Time, recommended	-
REFLOW PROCESS	
Soldering Temperature, recommended	-
Peak Soldering Time, recommended	-



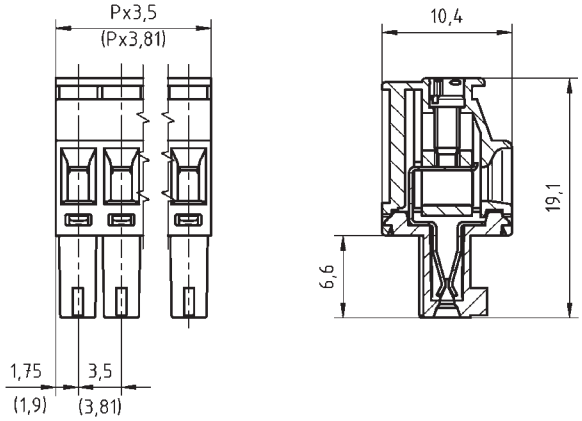

COLOURS[1]

- GREEN, RAL 6018
- LIGHT GREY, RAL 7035
- LIGHT GREEN, similar RAL 6018

COUNTERPARTS (SPACING 3.5 MM)

Pin Strip
STL1550

COUNTERPARTS (SPACING 3.81 MM)

Pin Strip
STLZ1550 STLZ1570 STLZ1590

ORDER DATA (SPACING 3.5 MM)

Poles	Width (mm)	Article Designation	Article Number	PU
2	7.00	AK1700/2-3.5-GREEN	51700020001F	200
3	10.50	AK1700/3-3.5-GREEN	51700030001F	200
4	14.00	AK1700/4-3.5-GREEN	51700040001F	200
5	17.50	AK1700/5-3.5-GREEN	51700050001F	200
6	21.00	AK1700/6-3.5-GREEN	51700060001E	100
7	24.50	AK1700/7-3.5-GREEN	51700070001E	100
8	28.00	AK1700/8-3.5-GREEN	51700080001D	50
9	31.50	AK1700/9-3.5-GREEN	51700090001D	50
...	...	...	...	...
20	70.00	AK1700/20-3.5-GREEN	51700200001D	50

ORDER DATA (SPACING 3.81 MM)

Poles	Width (mm)	Article Designation	Article Number	PU
2	7.62	AKZ1700/2-3.81-GREEN	51700020021F	200
3	11.43	AKZ1700/3-3.81-GREEN	51700030021F	200
4	15.24	AKZ1700/4-3.81-GREEN	51700040021F	200
5	19.05	AKZ1700/5-3.81-GREEN	51700050021F	200
6	22.86	AKZ1700/6-3.81-GREEN	51700060021E	100
7	26.67	AKZ1700/7-3.81-GREEN	51700070021E	100
8	30.48	AKZ1700/8-3.81-GREEN	51700080021D	50
9	34.29	AKZ1700/9-3.81-GREEN	51700090021D	50
...	...	...	...	...
20	76.20	AKZ1700/20-3.81-GREEN	51700200021D	50

ACCESSORIES

	Description	Article Number
	Series AK(Z)1700 with pull relief	on request
	Bridge, 2-pole, BR/2-3.5/3.81-L7.5	50000000015
	Bridge, 3-pole, BR/3-3.5/3.81-L7.5	50000000016
	Bridge, 2-pole, insulated, BRI/2-7.0/7.62-L7.5-LIGHT GREY	50000000018

RATINGS

	cULus			VDE	
Usegroup	B	C	D		
Rated Voltage	300 V	-	300 V	160 V	
Rated Current	8 A	-	8 A	8 A	
Overvoltage Category				III	
Rated Wire Size				min	max
solid	AWG 28-16	-	AWG 28-16	0.5 mm² (6 A)	1.5 mm² (8 A)
stranded	AWG 28-16	-	AWG 28-16	0.5 mm² (6 A)	1.5 mm² (8 A)
Torque (in.lbs)	2.21	-	2.21	2.21	
Screw Size	M2	-	M2	M2	
Test Voltage	1.6 kV	-	1.6 kV	2.5 kV	
Pollution Degree				3	

[1]Colours according to RAL, there may be variations on colour due to production conditions. Special colours on request.

L'IMPULSION Retrouvez nous sur www.limpulsion.fr

AK1700/..F-3.5-GREEN
AKZ1700/..F-3.81-GREEN

Spacing 3.5 mm / Spacing 3.81 mm



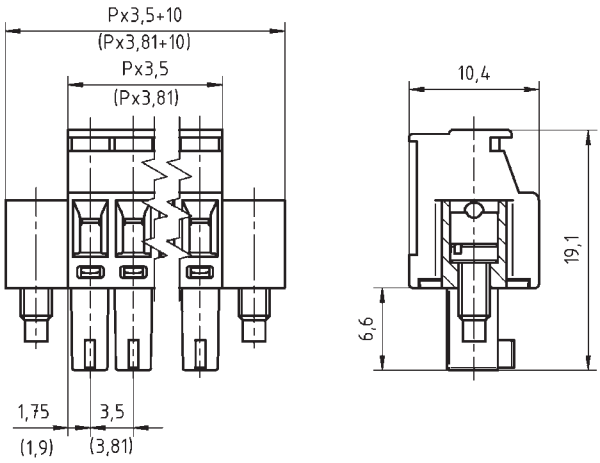

ACCESSORIES

	Description	Article Number
	Series AK(Z)1700 with pull relief	on request
	Bridge, 2-pole, BR/2-3.5/3.81-L7.5	50000000015
	Bridge, 3-pole, BR/3-3.5/3.81-L7.5	50000000016
	Bridge, 2-pole, insulated, BRI/2-7.0/7.62-L7.5-LIGHT GREY	50000000018

RATINGS

Usegroup	B	C	D		
Rated Voltage	300 V	-	300 V	160 V	
Rated Current	8 A	-	8 A	8 A	
Overvoltage Category				III	
Rated Wire Size				min	max
solid	AWG 28-16	-	AWG 28-16	0.5 mm² (6 A)	1.5 mm² (8 A)
stranded	AWG 28-16	-	AWG 28-16	0.5 mm² (6 A)	1.5 mm² (8 A)
Torque (in.lbs)	2.21	-	2.21	2.21	
Screw Size	M2	-	M2	M2	
Test Voltage	1.6 kV	-	1.6 kV	2.5 kV	
Pollution Degree				3	

WIRE SIZES	
solid min	0.14 mm²
solid max	1.5 mm²
stranded min	0.14 mm²
stranded max	1.5 mm²
stranded with ferrule min	0.25 mm²
stranded with ferrule max	1.0 mm²
DIMENSIONS	
Stripped Length	7.0 mm
PCB Hole Diameter	-
MATERIALS	
Clamp	Brass
Screw	Bronze
Screw, Flange	Steel
Contact Spring	Bronze
INSULATING MATERIAL	
Material	PA 6.6
Flammability Class	UL 94 V-0
TEMPERATURES	
Operating Temperature (without mech. load)	-40 °C - 105 °C
WAVE SOLDERING PROCESS	
Soldering Temperature, recommended	-
Peak Soldering Time, recommended	-
REFLOW PROCESS	
Soldering Temperature, recommended	-
Peak Soldering Time, recommended	-

COLOURS[1]

GREEN, RAL 6018
LIGHT GREY, RAL 7035
LIGHT GREEN, similar RAL 6018

COUNTERPARTS (SPACING 3.5 MM)

Pin Strip
STL1550

COUNTERPARTS (SPACING 3.81 MM)

Pin Strip
STLZ1550 STLZ1570

ORDER DATA (SPACING 3.5 MM)

Poles	Width (mm)	Article Designation	Article Number	PU
2	17.00	AK1700/2F-3.5-GREEN	51700022001F	200
3	20.50	AK1700/3F-3.5-GREEN	51700032001F	200
4	24.00	AK1700/4F-3.5-GREEN	51700042001F	200
5	27.50	AK1700/5F-3.5-GREEN	51700052001E	100
6	31.00	AK1700/6F-3.5-GREEN	51700062001E	100
7	34.50	AK1700/7F-3.5-GREEN	51700072001D	50
8	38.00	AK1700/8F-3.5-GREEN	51700082001D	50
9	41.50	AK1700/9F-3.5-GREEN	51700092001D	50
...	...	...	...	...
20	80.00	AK1700/20F-3.5-GREEN	51700202001D	50

ORDER DATA (SPACING 3.81 MM)

Poles	Width (mm)	Article Designation	Article Number	PU
2	17.62	AKZ1700/2F-3.81-GREEN	51700022021F	200
3	21.43	AKZ1700/3F-3.81-GREEN	51700032021F	200
4	25.24	AKZ1700/4F-3.81-GREEN	51700042021F	200
5	29.05	AKZ1700/5F-3.81-GREEN	51700052021E	100
6	32.86	AKZ1700/6F-3.81-GREEN	51700062021E	100
7	36.67	AKZ1700/7F-3.81-GREEN	51700072021D	50
8	40.48	AKZ1700/8F-3.81-GREEN	51700082021D	50
9	44.29	AKZ1700/9F-3.81-GREEN	51700092021D	50
...	...	...	...	...
20	86.20	AKZ1700/20F-3.81-GREEN	51700202021D	50

[1]Colours according to RAL, there may be variations on colour due to production conditions. Special colours on request.

Spacing 3.5 mm / Spacing 3.81 mm

AK1710/..-3.5-GREEN
AKZ1710/..-3.81-GREEN

WIRE SIZES	
solid min	0.14 mm²
solid max	1.5 mm²
stranded min	0.14 mm²
stranded max	1.5 mm²
stranded with ferrule min	0.25 mm²
stranded with ferrule max	1.0 mm²
DIMENSIONS	
Stripped Length	7.0 mm
PCB Hole Diameter	-
MATERIALS	
Clamp	Brass
Screw	Bronze
Contact Spring	Bronze
INSULATING MATERIAL	
Material	PA 6.6
Flammability Class	UL 94 V-0
TEMPERATURES	
Operating Temperature (without mech. load)	-40 °C - 105 °C
WAVE SOLDERING PROCESS	
Soldering Temperature, recommended	-
Peak Soldering Time, recommended	-
REFLOW PROCESS	
Soldering Temperature, recommended	-
Peak Soldering Time, recommended	-



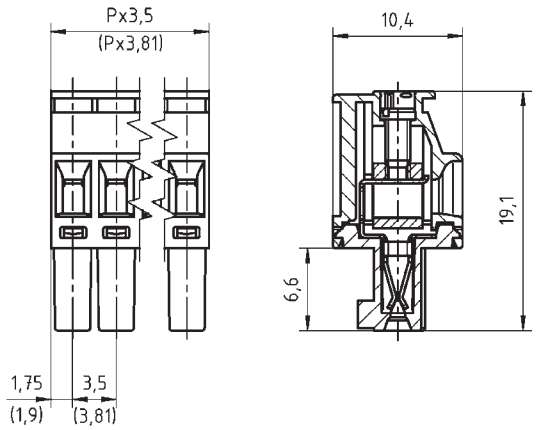

COLOURS[1]

GREEN, RAL 6018
LIGHT GREY, RAL 7035
LIGHT GREEN, similar RAL 6018

COUNTERPARTS (SPACING 3.5 MM)

Pin Strip
STL1550

COUNTERPARTS (SPACING 3.81 MM)

Pin Strip
STLZ1550 STLZ1570 STLZ1590

ORDER DATA (SPACING 3.5 MM)

Poles	Width (mm)	Article Designation	Article Number	PU
2	7.00	AK1710/2-3.5-GREEN	51710020001F	200
3	10.50	AK1710/3-3.5-GREEN	51710030001F	200
4	14.00	AK1710/4-3.5-GREEN	51710040001F	200
5	17.50	AK1710/5-3.5-GREEN	51710050001F	200
6	21.00	AK1710/6-3.5-GREEN	51710060001E	100
7	24.50	AK1710/7-3.5-GREEN	51710070001E	100
8	28.00	AK1710/8-3.5-GREEN	51710080001D	50
9	31.50	AK1710/9-3.5-GREEN	51710090001D	50
...	...	...	...	...
20	70.00	AK1710/20-3.5-GREEN	51710200001D	50

ORDER DATA (SPACING 3.81 MM)

Poles	Width (mm)	Article Designation	Article Number	PU
2	7.62	AKZ1710/2-3.81-GREEN	51710020021F	200
3	11.43	AKZ1710/3-3.81-GREEN	51710030021F	200
4	15.24	AKZ1710/4-3.81-GREEN	51710040021F	200
5	19.05	AKZ1710/5-3.81-GREEN	51710050021F	200
6	22.86	AKZ1710/6-3.81-GREEN	51710060021E	100
7	26.67	AKZ1710/7-3.81-GREEN	51710070021E	100
8	30.48	AKZ1710/8-3.81-GREEN	51710080021D	50
9	34.29	AKZ1710/9-3.81-GREEN	51710090021D	50
...	...	...	...	...
20	76.20	AKZ1710/20-3.81-GREEN	51710200021D	50

ACCESSORIES

	Description	Article Number
	Series AK(Z)1710 with pull relief	on request
	Bridge, 2-pole, BR/2-3.5/3.81-L7.5	50000000015
	Bridge, 3-pole, BR/3-3.5/3.81-L7.5	50000000016
	Bridge, 2-pole, insulated, BRI/2-7.0/7.62-L7.5-LIGHT GREY	50000000018

RATINGS	cULus			VDE	
Usegroup	B	C	D		
Rated Voltage	300 V	-	300 V	160 V	
Rated Current	8 A	-	8 A	8 A	
Overvoltage Category				III	
Rated Wire Size				min	max
solid	AWG 28-16	-	AWG 28-16	0.5 mm² (6 A)	1.5 mm² (8 A)
stranded	AWG 28-16	-	AWG 28-16	0.5 mm² (6 A)	1.5 mm² (8 A)
Torque (in.lbs)	2.21	-	2.21	2.21	
Screw Size	M2	-	M2	M2	
Test Voltage	1.6 kV	-	1.6 kV	2.5 kV	
Pollution Degree				3	

[1]Colours according to RAL, there may be variations on colour due to production conditions. Special colours on request.

L'IMPULSION
Retrouvez nous sur
www.limpulsion.fr

AK1710/..F-3.5-GREEN
AKZ1710/..F-3.81-GREEN

Spacing 3.5 mm / Spacing 3.81 mm



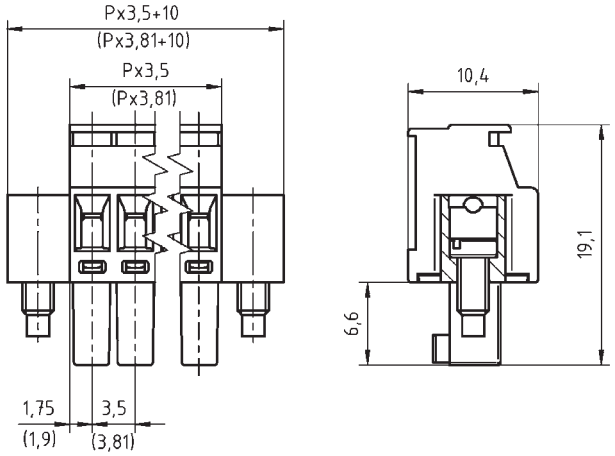

WIRE SIZES	
solid min	0.14 mm²
solid max	1.5 mm²
stranded min	0.14 mm²
stranded max	1.5 mm²
stranded with ferrule min	0.25 mm²
stranded with ferrule max	1.0 mm²
DIMENSIONS	
Stripped Length	7.0 mm
PCB Hole Diameter	-
MATERIALS	
Clamp	Brass
Screw	Bronze
Screw, Flange	Steel
Contact Spring	Bronze
INSULATING MATERIAL	
Material	PA 6.6
Flammability Class	UL 94 V-0
TEMPERATURES	
Operating Temperature (without mech. load)	-40 °C - 105 °C
WAVE SOLDERING PROCESS	
Soldering Temperature, recommended	-
Peak Soldering Time, recommended	-
REFLOW PROCESS	
Soldering Temperature, recommended	-
Peak Soldering Time, recommended	-

COLOURS[1]

GREEN, RAL 6018	LIGHT GREY, RAL 7035
LIGHT GREEN, similar RAL 6018	

COUNTERPARTS (SPACING 3.5 MM)

Pin Strip

STL1550

COUNTERPARTS (SPACING 3.81 MM)

Pin Strip

STLZ1550 STLZ1570

ACCESSORIES

	Description	Article Number
	Series AK(Z)1710 with pull relief	on request
	Bridge, 2-pole, BR/2-3.5/3.81-L7.5	50000000015
	Bridge, 3-pole, BR/3-3.5/3.81-L7.5	50000000016
	Bridge, 2-pole, insulated, BRI/2-7.0/7.62-L7.5-LIGHT GREY	50000000018

RATINGS

Usegroup	B	C	D		
Rated Voltage	300 V	-	300 V	160 V	
Rated Current	8 A	-	8 A	8 A	
Overvoltage Category				III	
Rated Wire Size				min	max
solid	AWG 28-16	-	AWG 28-16	0.5 mm² (6 A)	1.5 mm² (8 A)
stranded	AWG 28-16	-	AWG 28-16	0.5 mm² (6 A)	1.5 mm² (8 A)
Torque (in.lbs)	2.21	-	2.21	2.21	
Screw Size	M2	-	M2	M2	
Test Voltage	1.6 kV	-	1.6 kV	2.5 kV	
Pollution Degree				3	

ORDER DATA (SPACING 3.5 MM)

Poles	Width (mm)	Article Designation	Article Number	PU
2	17.00	AK1710/2F-3.5-GREEN	51710022001F	200
3	20.50	AK1710/3F-3.5-GREEN	51710032001F	200
4	24.00	AK1710/4F-3.5-GREEN	51710042001F	200
5	27.50	AK1710/5F-3.5-GREEN	51710052001E	100
6	31.00	AK1710/6F-3.5-GREEN	51710062001E	100
7	34.50	AK1710/7F-3.5-GREEN	51710072001D	50
8	38.00	AK1710/8F-3.5-GREEN	51710082001D	50
9	41.50	AK1710/9F-3.5-GREEN	51710092001D	50
...	...	...	...	...
20	80.00	AK1710/20F-3.5-GREEN	51710202001D	50

ORDER DATA (SPACING 3.81 MM)

Poles	Width (mm)	Article Designation	Article Number	PU
2	17.62	AKZ1710/2F-3.81-GREEN	51710022021F	200
3	21.43	AKZ1710/3F-3.81-GREEN	51710032021F	200
4	25.24	AKZ1710/4F-3.81-GREEN	51710042021F	200
5	29.05	AKZ1710/5F-3.81-GREEN	51710052021E	100
6	32.86	AKZ1710/6F-3.81-GREEN	51710062021E	100
7	36.67	AKZ1710/7F-3.81-GREEN	51710072021D	50
8	40.48	AKZ1710/8F-3.81-GREEN	51710082021D	50
9	44.29	AKZ1710/9F-3.81-GREEN	51710092021D	50
...	...	...	...	...
20	86.20	AKZ1710/20F-3.81-GREEN	51710202021D	50

[1]Colours according to RAL, there may be variations on colour due to production conditions. Special colours on request.

Spacing 5.08 mm

AKZ1520/..-5.08-GREEN

NEW

WIRE SIZES	
solid min	0.14 mm²
solid max	1.5 mm²
stranded min	0.14 mm²
stranded max	1.5 mm²
stranded with ferrule min	0.25 mm²
stranded with ferrule max	0.5 mm²
DIMENSIONS	
Stripped Length	7.0 mm
PCB Hole Diameter	-
MATERIALS	
Clamp	Brass
Screw	Bronze
Contact Spring	Bronze
INSULATING MATERIAL	
Material	PA 6.6
Flammability Class	UL 94 V-0
TEMPERATURES	
Operating Temperature (without mech. load)	-40 °C - 105 °C
WAVE SOLDERING PROCESS	
Soldering Temperature, recommended	-
Peak Soldering Time, recommended	-
REFLOW PROCESS	
Soldering Temperature, recommended	-
Peak Soldering Time, recommended	-



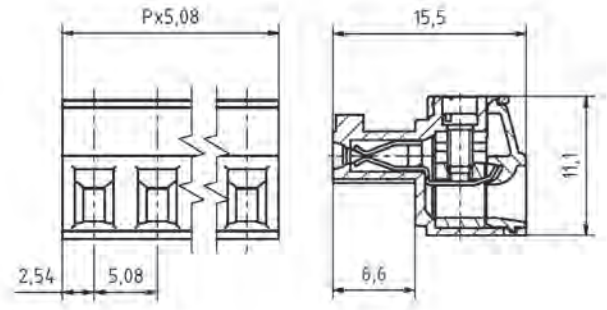

COLOURS[1]

GREEN, RAL 6018

COUNTERPARTS (SPACING 5.08 MM)

Pin Strip
STLZ1520

ACCESSORIES

	Description	Article Number
	Series AKZ1520 with pull relief	on request

ORDER DATA (SPACING 5.08 MM)

Poles	Width (mm)	Article Designation	Article Number	PU
2	10.16	AKZ1520/2-5.08-GREEN	51520020025F	200
3	15.24	AKZ1520/3-5.08-GREEN	51520030025F	200
4	20.32	AKZ1520/4-5.08-GREEN	51520040025E	100
5	25.40	AKZ1520/5-5.08-GREEN	51520050025E	100
6	30.48	AKZ1520/6-5.08-GREEN	51520060025D	50
7	35.56	AKZ1520/7-5.08-GREEN	51520070025D	50
8	40.64	AKZ1520/8-5.08-GREEN	51520080025D	50
9	45.72	AKZ1520/9-5.08-GREEN	51520090025D	50
10	50.80	AKZ1520/10-5.08-GREEN	51520100025D	50
11	55.88	AKZ1520/11-5.08-GREEN	51520110025D	50
12	60.96	AKZ1520/12-5.08-GREEN	51520120025D	50

RATINGS		
Usegroup	B	D
Rated Voltage	300 V	300 V
Rated Current	8 A	8 A
Rated Wire Size		
solid	AWG 28-16	AWG 28-16
stranded	AWG 28-16	AWG 28-16
Torque (in.lbs)	0.25 Nm	0.25 Nm
Screw Size	M2	M2
Test Voltage	1.6 kV	1.6 kV

*Approval Pending

RATINGS						
Overvoltage Category	II		III		III	
Pollution Degree	2		2		3	
Rated Voltage	400 V		320 V		250 V	
Rated Current	8.0 A		8.0 A		8.0 A	
Rated Wire Size	min	max	min	max	min	max
solid	0.2	1.5	0.2	1.5	0.2	1.5
stranded	0.2	1.5	0.2	1.5	0.2	1.5
Torque (in.lbs)	0.25 Nm		0.25 Nm		0.25 Nm	
Screw Size	M2		M2		M2	
Test Voltage	4.0 kV		4.0 kV		4.0 kV	

*Approval Pending

[1]Colours according to RAL, there may be variations on colour due to production conditions. Special colours on request.

L'IMPULSION
Retrouvez nous sur
www.limpulsion.fr

NEW

AKZ1520/..F-5.08-GREEN

Spacing 5.08 mm



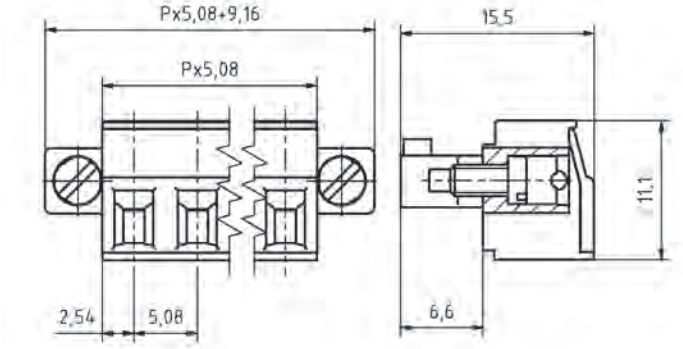

WIRE SIZES	
solid min	0.14 mm²
solid max	1.5 mm²
stranded min	0.14 mm²
stranded max	1.5 mm²
stranded with ferrule min	0.25 mm²
stranded with ferrule max	0.5 mm²
DIMENSIONS	
Stripped Length	7.0 mm
PCB Hole Diameter	-
MATERIALS	
Clamp	Brass
Screw	Bronze
Screw, Flange	Steel
Contact Spring	Bronze
INSULATING MATERIAL	
Material	PA 6.6
Flammability Class	UL 94 V-0
TEMPERATURES	
Operating Temperature (without mech. load)	-40 °C - 105 °C
WAVE SOLDERING PROCESS	
Soldering Temperature, recommended	-
Peak Soldering Time, recommended	-
REFLOW PROCESS	
Soldering Temperature, recommended	-
Peak Soldering Time, recommended	-

COLOURS[1]

GREEN, RAL 6018

ACCESSORIES

	Description	Article Number
	Series AKZ1520 with pull relief	on request

COUNTERPARTS (SPACING 5.08 MM)

Pin Strip
STLZ1520

RATINGS		
Usegroup	B	D
Rated Voltage	300 V	300 V
Rated Current	8 A	8 A
Rated Wire Size		
solid	AWG 28-16	AWG 28-16
stranded	AWG 28-16	AWG 28-16
Torque (in.lbs)	0.25 Nm	0.25 Nm
Screw Size	M2	M2
Test Voltage	1.6 kV	1.6 kV

*Approval Pending

RATINGS						
Overvoltage Category	II		III		III	
Pollution Degree	2		2		3	
Rated Voltage	400 V		320 V		250 V	
Rated Current	8.0 A		8.0 A		8.0 A	
Rated Wire Size	min	max	min	max	min	max
solid	0.2	1.5	0.2	1.5	0.2	1.5
stranded	0.2	1.5	0.2	1.5	0.2	1.5
Torque (in.lbs)	0.25 Nm		0.25 Nm		0.25 Nm	
Screw Size	M2		M2		M2	
Test Voltage	4.0 kV		4.0 kV		4.0 kV	

*Approval Pending

ORDER DATA (SPACING 5.08 MM)

Poles	Width (mm)	Article Designation	Article Number	PU
2	19.36	AKZ1520/2F-5.08-GREEN	51520022025F	200
3	24.44	AKZ1520/3F-5.08-GREEN	51520032025F	200
4	29.52	AKZ1520/4F-5.08-GREEN	51520042025F	200
5	34.60	AKZ1520/5F-5.08-GREEN	51520052025D	50
6	39.68	AKZ1520/6F-5.08-GREEN	51520062025D	50
7	44.76	AKZ1520/7F-5.08-GREEN	51520072025D	50
8	49.84	AKZ1520/8F-5.08-GREEN	51520082025D	50
9	54.92	AKZ1520/9F-5.08-GREEN	51520092025D	50
10	60.00	AKZ1520/10F-5.08-GREEN	51520102025D	50
11	65.08	AKZ1520/11F-5.08-GREEN	51520112025D	50
12	70.16	AKZ1520/12F-5.08-GREEN	51520122025D	50

[1]Colours according to RAL, there may be variations on colour due to production conditions. Special colours on request.

Spacing 5.0 mm / Spacing 5.08 mm

AK950/..-5.0-GREEN
AKZ950/..-5.08-GREEN

WIRE SIZES	
solid min	0.2 mm²
solid max	4.0 mm²
stranded min	0.2 mm²
stranded max	2.5 mm²
stranded with ferrule min	0.25 mm²
stranded with ferrule max	2.5 mm²
DIMENSIONS	
Stripped Length	6.0 mm
PCB Hole Diameter	-
MATERIALS	
Clamp	Brass
Screw	Steel
Contact Spring	Bronze
INSULATING MATERIAL	
Material	PA 6.6
Flammability Class	UL 94 V-0
TEMPERATURES	
Operating Temperature (without mech. load)	-40 °C - 105 °C
WAVE SOLDERING PROCESS	
Soldering Temperature, recommended	-
Peak Soldering Time, recommended	-
REFLOW PROCESS	
Soldering Temperature, recommended	-
Peak Soldering Time, recommended	-



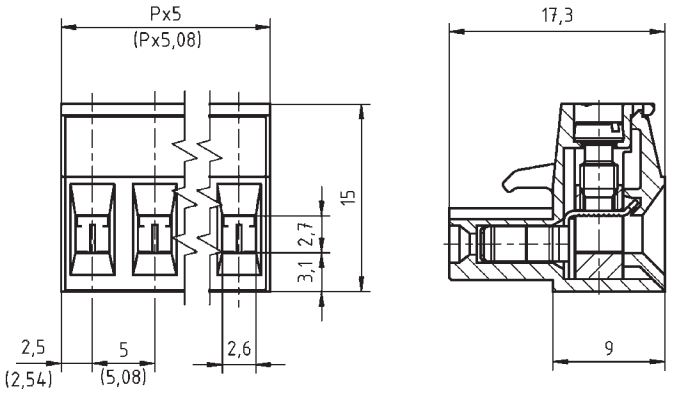

COLOURS[1]

GREEN, RAL 6018		BLACK, RAL 9011	
PEBBLE GREY, RAL 7032		LIGHT GREEN, similar RAL 6018	

COUNTERPARTS (SPACING 5.0 MM)

Pin Strip

STL950 STL950-HT STL950-G-HT STL955 STL975

COUNTERPARTS (SPACING 5.08 MM)

Pin Strip / PCB Terminal Block

STLZ950 STLZ950-HT STLZ950-G-HT STLZ970 STLZ990 AKZ950 AKZS950

ORDER DATA (SPACING 5.0 MM)

Poles	Width (mm)	Article Designation	Article Number	PU
2	10.00	AK950/2-5.0-GREEN	50950020001F	200
3	15.00	AK950/3-5.0-GREEN	50950030001F	200
4	20.00	AK950/4-5.0-GREEN	50950040001F	200
5	25.00	AK950/5-5.0-GREEN	50950050001E	100
6	30.00	AK950/6-5.0-GREEN	50950060001E	100
7	35.00	AK950/7-5.0-GREEN	50950070001E	100
8	40.00	AK950/8-5.0-GREEN	50950080001D	50
9	45.00	AK950/9-5.0-GREEN	50950090001D	50
...	...	...	...	...
24	120.00	AK950/24-5.0-GREEN	50950240001D	50

ORDER DATA (SPACING 5.08 MM)

Poles	Width (mm)	Article Designation	Article Number	PU
2	10.16	AKZ950/2-5.08-GREEN	50950020021F	200
3	15.24	AKZ950/3-5.08-GREEN	50950030021F	200
4	20.32	AKZ950/4-5.08-GREEN	50950040021F	200
5	25.40	AKZ950/5-5.08-GREEN	50950050021E	100
6	30.48	AKZ950/6-5.08-GREEN	50950060021E	100
7	35.56	AKZ950/7-5.08-GREEN	50950070021E	100
8	40.64	AKZ950/8-5.08-GREEN	50950080021D	50
9	45.72	AKZ950/9-5.08-GREEN	50950090021D	50
...	...	...	...	...
24	121.92	AKZ950/24-5.08-GREEN	50950240021D	50

ACCESSORIES

	Description	Article Number
	Series AK(Z)950 with pull relief	on request
	Bridge, 2-pole, insulated, BRI/2-5.0/5.08-LIGHT GREY	50000000006
	Bridge, 3-pole, insulated, BRI/3-5.0/5.08-LIGHT GREY	50000000007
	Coding Star CS1-5.0/5.08-RED	50000000021

RATINGS

	c UL us			VDE	
Usegroup	B	C	D		
Rated Voltage	300 V	150 V	300 V	250 V	
Rated Current	15 A	15 A	10 A	12 A	
Overvoltage Category				III	
Rated Wire Size				min	max
solid	AWG 22-12	AWG 22-12	AWG 22-12	0.5 mm² (5 A)	2.5 mm² (12 A)
stranded	AWG 22-12	AWG 22-12	AWG 22-12	0.5 mm² (5 A)	2.5 mm² (12 A)
Torque (in.lbs)	4.43	4.43	4.43	4.43	
Screw Size	M3	M3	M3	M3	
Test Voltage	1.6 kV	1.3 kV	1.6 kV	4.0 kV	
Pollution Degree				3	

[1]Colours according to RAL, there may be variations on colour due to production conditions. Special colours on request.

L'IMPULSION
Retrouvez nous sur
www.limpulsion.fr

AK950/..-5.0-GREEN-HC
AKZ950/..-5.08-GREEN-HC

Spacing 5.0 mm / Spacing 5.08 mm



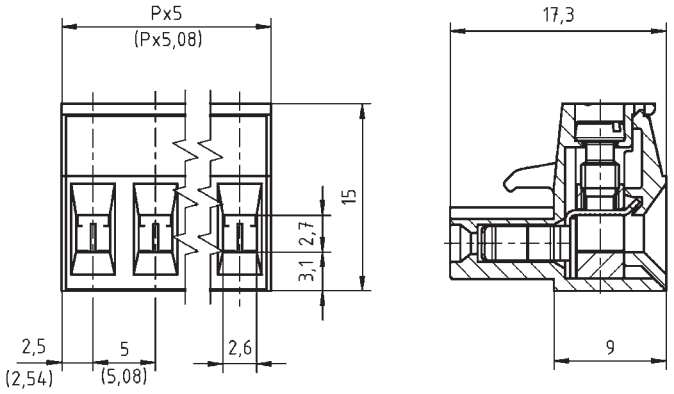

WIRE SIZES	
solid min	0.2 mm²
solid max	4.0 mm²
stranded min	0.2 mm²
stranded max	2.5 mm²
stranded with ferrule min	0.25 mm²
stranded with ferrule max	2.5 mm²
DIMENSIONS	
Stripped Length	6.0 mm
PCB Hole Diameter	-
MATERIALS	
Clamp	Brass
Screw	Steel
Contact Spring	Copper Alloy
INSULATING MATERIAL	
Material	PA 6.6
Flammability Class	UL 94 V-0
TEMPERATURES	
Operating Temperature (without mech. load)	-40 °C - 105 °C
WAVE SOLDERING PROCESS	
Soldering Temperature, recommended	-
Peak Soldering Time, recommended	-
REFLOW PROCESS	
Soldering Temperature, recommended	-
Peak Soldering Time, recommended	-

COLOURS[1]

GREEN, RAL 6018	BLACK, RAL 9011
PEBBLE GREY, RAL 7032	LIGHT GREEN, similar RAL 6018

ACCESSORIES

	Description	Article Number
	Series AK(Z)950 with pull relief	on request
	Bridge, 2-pole, insulated, BRI/2-5.0/5.08-LIGHT GREY	50000000006
	Bridge, 3-pole, insulated, BRI/3-5.0/5.08-LIGHT GREY	50000000007
	Coding Star CS1-5.0/5.08-RED	50000000021

RATINGS

	c UL us			VDE	
Usegroup	B	C	D		
Rated Voltage	300 V	150 V	300 V	250 V	
Rated Current	16 A	16 A	10 A	16 A	
Overvoltage Category				III	
Rated Wire Size				min	max
solid	AWG 22-12	AWG 22-12	AWG 22-12	0.5 mm² (5 A)	2.5 mm² (16 A)
stranded	AWG 22-12	AWG 22-12	AWG 22-12	0.5 mm² (5 A)	2.5 mm² (16 A)
Torque (in.lbs)	4.43	4.43	4.43	4.43	
Screw Size	M3	M3	M3	M3	
Test Voltage	1.6 kV	1.3 kV	1.6 kV	4.0 kV	
Pollution Degree				3	

COUNTERPARTS (SPACING 5.0 MM)

Pin Strip

STL950 STL950-HC-HT STL950-G-HC-HT

COUNTERPARTS (SPACING 5.08 MM)

Pin Strip

STLZ950 STLZ950-HC-HT STLZ950-G-HC-HT

ORDER DATA (SPACING 5.0 MM)

Poles	Width (mm)	Article Designation	Article Number	PU
2	10.00	AK950/2-5.0-GREEN-HC	50950020009F	200
3	15.00	AK950/3-5.0-GREEN-HC	50950030009F	200
4	20.00	AK950/4-5.0-GREEN-HC	50950040009F	200
5	25.00	AK950/5-5.0-GREEN-HC	50950050009E	100
6	30.00	AK950/6-5.0-GREEN-HC	50950060009E	100
7	35.00	AK950/7-5.0-GREEN-HC	50950070009E	100
8	40.00	AK950/8-5.0-GREEN-HC	50950080009D	50
9	45.00	AK950/9-5.0-GREEN-HC	50950090009D	50
...	...	...	...	...
12	60.00	AK950/12-5.0-GREEN-HC	50950120009D	50

ORDER DATA (SPACING 5.08 MM)

Poles	Width (mm)	Article Designation	Article Number	PU
2	10.16	AKZ950/2-5.08-GREEN-HC	50950020029F	200
3	15.24	AKZ950/3-5.08-GREEN-HC	50950030029F	200
4	20.32	AKZ950/4-5.08-GREEN-HC	50950040029F	200
5	25.40	AKZ950/5-5.08-GREEN-HC	50950050029E	100
6	30.48	AKZ950/6-5.08-GREEN-HC	50950060029E	100
7	35.56	AKZ950/7-5.08-GREEN-HC	50950070029E	100
8	40.64	AKZ950/8-5.08-GREEN-HC	50950080029D	50
9	45.72	AKZ950/9-5.08-GREEN-HC	50950090029D	50
...	...	...	...	...
12	60.96	AKZ950/12-5.08-GREEN-HC	50950120029D	50

[1]Colours according to RAL, there may be variations on colour due to production conditions. Special colours on request.

Spacing 5.0 mm / Spacing 5.08 mm

AK950/..F-5.0-GREEN
AKZ950/..F-5.08-GREEN

WIRE SIZES	
solid min	0.2 mm²
solid max	4.0 mm²
stranded min	0.2 mm²
stranded max	2.5 mm²
stranded with ferrule min	0.25 mm²
stranded with ferrule max	2.5 mm²
DIMENSIONS	
Stripped Length	6.0 mm
PCB Hole Diameter	-
MATERIALS	
Clamp	Brass
Screw	Steel
Screw, Flange	Steel
Contact Spring	Bronze
INSULATING MATERIAL	
Material	PA 6.6
Flammability Class	UL 94 V-0
TEMPERATURES	
Operating Temperature (without mech. load)	-40 °C - 105 °C
WAVE SOLDERING PROCESS	
Soldering Temperature, recommended	-
Peak Soldering Time, recommended	-
REFLOW PROCESS	
Soldering Temperature, recommended	-
Peak Soldering Time, recommended	-



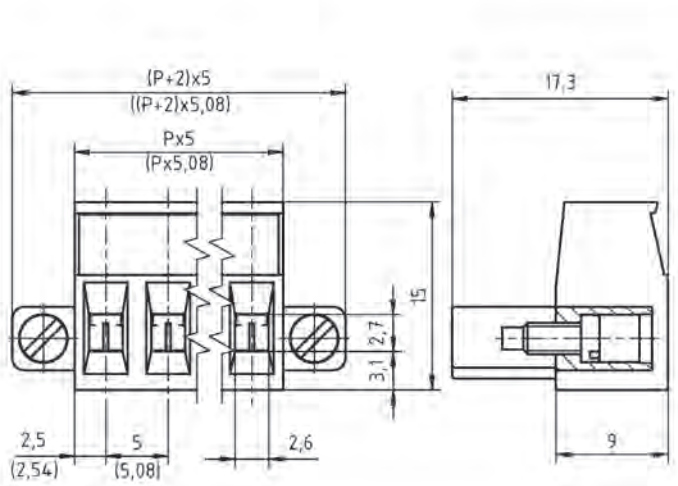

COLOURS[1]

GREEN, RAL 6018 — LIGHT GREEN, similar RAL 6018

COUNTERPARTS (SPACING 5.0 MM)

Pin Strip

STL950 STL950-HT

COUNTERPARTS (SPACING 5.08 MM)

Pin Strip / PCB Terminal Block

STLZ950 STLZ950-HT STLZ970 AKZS950

ORDER DATA (SPACING 5.0 MM)

Poles	Width (mm)	Article Designation	Article Number	PU
2	20.00	AK950/2F-5.0-GREEN	50950022001F	200
3	25.00	AK950/3F-5.0-GREEN	50950032001F	200
4	30.00	AK950/4F-5.0-GREEN	50950042001F	200
5	35.00	AK950/5F-5.0-GREEN	50950052001E	100
6	40.00	AK950/6F-5.0-GREEN	50950062001E	100
7	45.00	AK950/7F-5.0-GREEN	50950072001E	100
8	50.00	AK950/8F-5.0-GREEN	50950082001D	50
9	55.00	AK950/9F-5.0-GREEN	50950092001D	50
...	...	...	...	...
24	130.00	AK950/24F-5.0-GREEN	50950242001D	50

ORDER DATA (SPACING 5.08 MM)

Poles	Width (mm)	Article Designation	Article Number	PU
2	20.32	AKZ950/2F-5.08-GREEN	50950022021F	200
3	25.40	AKZ950/3F-5.08-GREEN	50950032021F	200
4	30.48	AKZ950/4F-5.08-GREEN	50950042021F	200
5	35.56	AKZ950/5F-5.08-GREEN	50950052021E	100
6	40.64	AKZ950/6F-5.08-GREEN	50950062021E	100
7	45.72	AKZ950/7F-5.08-GREEN	50950072021E	100
8	50.80	AKZ950/8F-5.08-GREEN	50950082021D	50
9	55.88	AKZ950/9F-5.08-GREEN	50950092021D	50
...	...	...	...	...
24	132.08	AKZ950/24F-5.08-GREEN	50950242021D	50

ACCESSORIES

	Description	Article Number
	Series AK(Z)950 with pull relief	on request
	Bridge, 2-pole, insulated, BRI/2-5.0/5.08-LIGHT GREY	50000000006
	Bridge, 3-pole, insulated, BRI/3-5.0/5.08-LIGHT GREY	50000000007
	Coding Star CS1-5.0/5.08-RED	50000000021

RATINGS

	c UL us			VDE	
Usegroup	B	C	D		
Rated Voltage	300 V	150 V	300 V	250 V	
Rated Current	15 A	15 A	10 A	12 A	
Overvoltage Category				III	
Rated Wire Size				min	max
solid	AWG 22-12	AWG 22-12	AWG 22-12	0.5 mm² (5 A)	2.5 mm² (12 A)
stranded	AWG 22-12	AWG 22-12	AWG 22-12	0.5 mm² (5 A)	2.5 mm² (12 A)
Torque (in.lbs)	4.43	4.43	4.43	4.43	
Screw Size	M3	M3	M3	M3	
Test Voltage	1.6 kV	1.3 kV	1.6 kV	4.0 kV	
Pollution Degree				3	

[1]Colours according to RAL, there may be variations on colour due to production conditions. Special colours on request.

L'IMPULSION
Retrouvez nous sur
www.limpulsion.fr

AK950/..F-5.0-GREEN-HC
AKZ950/..F-5.08-GREEN-HC

Spacing 5.0 mm / Spacing 5.08 mm



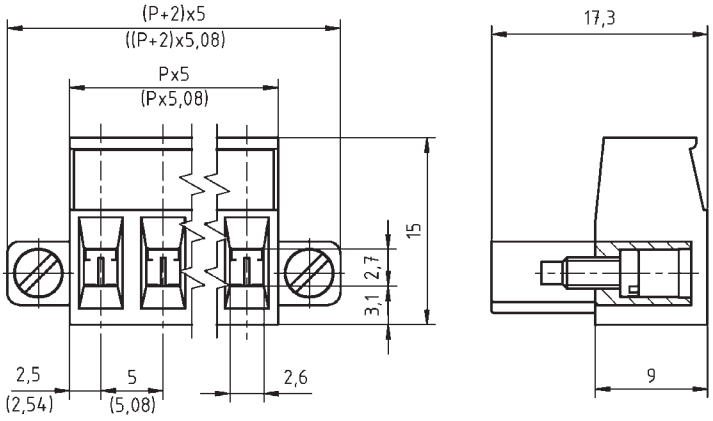

WIRE SIZES	
solid min	0.2 mm²
solid max	4.0 mm²
stranded min	0.2 mm²
stranded max	2.5 mm²
stranded with ferrule min	0.25 mm²
stranded with ferrule max	2.5 mm²
DIMENSIONS	
Stripped Length	6.0 mm
PCB Hole Diameter	-
MATERIALS	
Clamp	Brass
Screw	Steel
Screw, Flange	Steel
Contact Spring	Copper Alloy
INSULATING MATERIAL	
Material	PA 6.6
Flammability Class	UL 94 V-0
TEMPERATURES	
Operating Temperature (without mech. load)	-40 °C - 105 °C
WAVE SOLDERING PROCESS	
Soldering Temperature, recommended	-
Peak Soldering Time, recommended	-
REFLOW PROCESS	
Soldering Temperature, recommended	-
Peak Soldering Time, recommended	-

COLOURS[1]

GREEN, RAL 6018

LIGHT GREEN, similar RAL 6018

ACCESSORIES

	Description	Article Number
	Series AK(Z)950 with pull relief	on request
	Bridge, 2-pole, insulated, BRI/2-5.0/5.08-LIGHT GREY	50000000006
	Bridge, 3-pole, insulated, BRI/3-5.0/5.08-LIGHT GREY	50000000007
	Coding Star CS1-5.0/5.08-RED	50000000021

RATINGS

	cULus			VDE	
Usegroup	B	C	D		
Rated Voltage	300 V	150 V	300 V	250 V	
Rated Current	16 A	16 A	10 A	16 A	
Overvoltage Category				III	
Rated Wire Size				min	max
solid	AWG 22-12	AWG 22-12	AWG 22-12	0.5 mm² (5 A)	2.5 mm² (16 A)
stranded	AWG 22-12	AWG 22-12	AWG 22-12	0.5 mm² (5 A)	2.5 mm² (16 A)
Torque (in.lbs)	4.43	4.43	4.43	4.43	
Screw Size	M3	M3	M3	M3	
Test Voltage	1.6 kV	1.3 kV	1.6 kV	4.0 kV	
Pollution Degree				3	

COUNTERPARTS (SPACING 5.0 MM)

Pin Strip

STL950 STL950-HC-HT

COUNTERPARTS (SPACING 5.08 MM)

Pin Strip

STLZ950 STLZ950-HC-HT

ORDER DATA (SPACING 5.0 MM)

Poles	Width (mm)	Article Designation	Article Number	PU
2	20.00	AK950/2F-5.0-GREEN-HC	50950022009F	200
3	25.00	AK950/3F-5.0-GREEN-HC	50950032009F	200
4	30.00	AK950/4F-5.0-GREEN-HC	50950042009F	200
5	35.00	AK950/5F-5.0-GREEN-HC	50950052009E	100
6	40.00	AK950/6F-5.0-GREEN-HC	50950062009E	100
7	45.00	AK950/7F-5.0-GREEN-HC	50950072009E	100
8	50.00	AK950/8F-5.0-GREEN-HC	50950082009D	50
9	55.00	AK950/9F-5.0-GREEN-HC	50950092009D	50
...	...	...	...	...
12	70.00	AK950/12F-5.0-GREEN-HC	50950122009D	50

ORDER DATA (SPACING 5.08 MM)

Poles	Width (mm)	Article Designation	Article Number	PU
2	20.32	AKZ950/2F-5.08-GREEN-HC	50950022029F	200
3	25.40	AKZ950/3F-5.08-GREEN-HC	50950032029F	200
4	30.48	AKZ950/4F-5.08-GREEN-HC	50950042029F	200
5	35.56	AKZ950/5F-5.08-GREEN-HC	50950052029E	100
6	40.64	AKZ950/6F-5.08-GREEN-HC	50950062029E	100
7	45.72	AKZ950/7F-5.08-GREEN-HC	50950072029E	100
8	50.80	AKZ950/8F-5.08-GREEN-HC	50950082029D	50
9	55.88	AKZ950/9F-5.08-GREEN-HC	50950092029D	50
...	...	...	...	...
12	71.12	AKZ950/12F-5.08-GREEN-HC	50950122029D	50

[1]Colours according to RAL, there may be variations on colour due to production conditions. Special colours on request.

Spacing 5.0 mm / Spacing 5.08 mm

AK955/..-5.0-GREEN
AKZ955/..-5.08-GREEN

WIRE SIZES	
solid min	0.2 mm²
solid max	4.0 mm²
stranded min	0.2 mm²
stranded max	4.0 mm²
stranded with ferrule min	0.25 mm²
stranded with ferrule max	2.5 mm²
DIMENSIONS	
Stripped Length	7.0 mm
PCB Hole Diameter	-
MATERIALS	
Clamp	Brass
Screw	Steel
Contact Spring	Bronze
INSULATING MATERIAL	
Material	PA 6.6
Flammability Class	UL 94 V-0
TEMPERATURES	
Operating Temperature (without mech. load)	-40 °C - 105 °C
WAVE SOLDERING PROCESS	
Soldering Temperature, recommended	-
Peak Soldering Time, recommended	-
REFLOW PROCESS	
Soldering Temperature, recommended	-
Peak Soldering Time, recommended	-



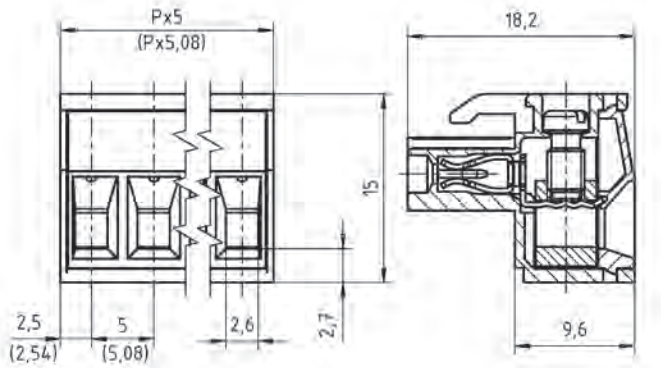

COLOURS[1]

GREEN, RAL 6018		BLACK, RAL 9011	
LIGHT GREY, RAL 7035		LIGHT GREEN, similar RAL 6018	

COUNTERPARTS (SPACING 5.0 MM)

Pin Strip

STL955 STL950 STL950-HT STL950-G-HT STL975

COUNTERPARTS (SPACING 5.08 MM)

Pin Strip / PCB Terminal Block

STLZ950 STLZ950-HT STLZ950-G-HT STLZ970 STLZ990 AKZ950

ORDER DATA (SPACING 5.0 MM)

Poles	Width (mm)	Article Designation	Article Number	PU
2	10.00	AK955/2-5.0-GREEN	50955020001F	200
3	15.00	AK955/3-5.0-GREEN	50955030001F	200
4	20.00	AK955/4-5.0-GREEN	50955040001F	200
5	25.00	AK955/5-5.0-GREEN	50955050001E	100
6	30.00	AK955/6-5.0-GREEN	50955060001E	100
7	35.00	AK955/7-5.0-GREEN	50955070001E	100
8	40.00	AK955/8-5.0-GREEN	50955080001D	50
9	45.00	AK955/9-5.0-GREEN	50955090001D	50
...	...	...	...	...
24	120.00	AK955/24-5.0-GREEN	50955240001D	50

ORDER DATA (SPACING 5.08 MM)

Poles	Width (mm)	Article Designation	Article Number	PU
2	10.16	AKZ955/2-5.08-GREEN	50955020021F	200
3	15.24	AKZ955/3-5.08-GREEN	50955030021F	200
4	20.32	AKZ955/4-5.08-GREEN	50955040021F	200
5	25.40	AKZ955/5-5.08-GREEN	50955050021E	100
6	30.48	AKZ955/6-5.08-GREEN	50955060021E	100
7	35.56	AKZ955/7-5.08-GREEN	50955070021E	100
8	40.64	AKZ955/8-5.08-GREEN	50955080021D	50
9	45.72	AKZ955/9-5.08-GREEN	50955090021D	50
...	...	...	...	...
24	121.92	AKZ955/24-5.08-GREEN	50955240021D	50

ACCESSORIES

	Description	Article Number
	Bridge, 2-pole, insulated, BRI/2-5.0/5.08-LIGHT GREY	50000000006
	Bridge, 3-pole, insulated, BRI/3-5.0/5.08-LIGHT GREY	50000000007
	Bridge, 2-pole, BR/2-5.0/5.08-L7.0	50000000008
	Coding Star CS1-5.0/5.08-RED	50000000021

RATINGS

	c UL us			VDE	
Usegroup	B	C	D		
Rated Voltage	300 V	-	300 V	250 V	
Rated Current	12 A	-	10 A	9 A	
Overvoltage Category				III	
Rated Wire Size				min	max
solid	AWG 28-12	-	AWG 28-12	0.2 mm² (2 A)	2.5 mm² (9 A)
stranded	AWG 28-12	-	AWG 28-12	0.2 mm² (2 A)	2.5 mm² (9 A)
Torque (in.lbs)	4.43	-	4.43	4.43	
Screw Size	M3	-	M3	M3	
Test Voltage	1.6 kV	-	1.6 kV	2.0 kV	
Pollution Degree				3	

[1]Colours according to RAL, there may be variations on colour due to production conditions. Special colours on request.

L'IMPULSION Retrouvez nous sur www.limpulsion.fr

AKZ950/..-5.08-GREEN-INV

Spacing 5.08 mm



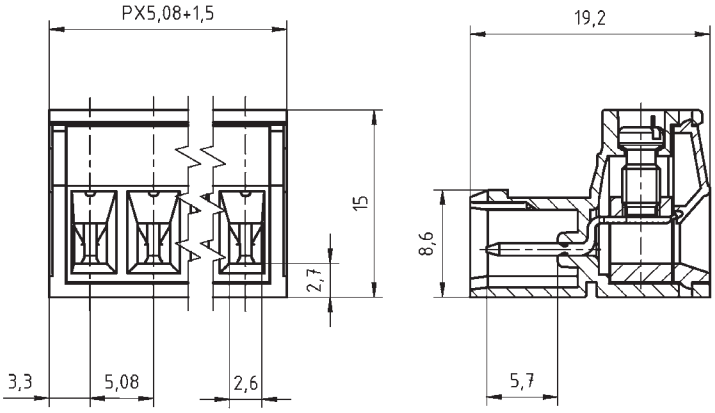

WIRE SIZES	
solid min	0.2 mm²
solid max	4.0 mm²
stranded min	0.2 mm²
stranded max	4.0 mm²
stranded with ferrule min	0.25 mm²
stranded with ferrule max	2.5 mm²
DIMENSIONS	
Stripped Length	7.0 mm
PCB Hole Diameter	-
MATERIALS	
Clamp	Brass
Screw	Steel
Contact Pin	Brass
INSULATING MATERIAL	
Material	PA 6.6
Flammability Class	UL 94 V-0
TEMPERATURES	
Operating Temperature (without mech. load)	-40 °C - 105 °C
WAVE SOLDERING PROCESS	
Soldering Temperature, recommended	-
Peak Soldering Time, recommended	-
REFLOW PROCESS	
Soldering Temperature, recommended	-
Peak Soldering Time, recommended	-

COLOURS[1]

GREEN, RAL 6018

LIGHT GREEN, similar RAL 6018

ACCESSORIES

	Description	Article Number
	Bridge, 2-pole, insulated, BRI/2-5.0/5.08-LIGHT GREY	50000000006
	Bridge, 3-pole, insulated, BRI/3-5.0/5.08-LIGHT GREY	50000000007
	Coding Star CS3-5.0/5.08-RED	50000000025

COUNTERPARTS (SPACING 5.08 MM)

Pin Strip / PCB Terminal Block

STLZ950-INV AKZ950 AKZ1100 AKZ1110 AKZ1200 AKZ4951

ORDER DATA (SPACING 5.08 MM)

Poles	Width (mm)	Article Designation	Article Number	PU
2	11.66	AKZ950/2-5.08-GREEN-INV	50950027028F	200
3	16.74	AKZ950/3-5.08-GREEN-INV	50950037028F	200
4	21.82	AKZ950/4-5.08-GREEN-INV	50950047028F	200
5	26.90	AKZ950/5-5.08-GREEN-INV	50950057028E	100
6	31.98	AKZ950/6-5.08-GREEN-INV	50950067028E	100
7	37.06	AKZ950/7-5.08-GREEN-INV	50950077028E	100
8	42.14	AKZ950/8-5.08-GREEN-INV	50950087028D	50
9	47.22	AKZ950/9-5.08-GREEN-INV	50950097028D	50
10	52.30	AKZ950/10-5.08-GREEN-INV	50950107028D	50
11	57.38	AKZ950/11-5.08-GREEN-INV	50950117028D	50
12	62.46	AKZ950/12-5.08-GREEN-INV	50950127028D	50
13	67.54	AKZ950/13-5.08-GREEN-INV	50950137028D	50
14	72.62	AKZ950/14-5.08-GREEN-INV	50950147028D	50
15	77.70	AKZ950/15-5.08-GREEN-INV	50950157028D	50
16	82.78	AKZ950/16-5.08-GREEN-INV	50950167028D	50
17	87.86	AKZ950/17-5.08-GREEN-INV	50950177028D	50
18	92.94	AKZ950/18-5.08-GREEN-INV	50950187028D	50
19	98.02	AKZ950/19-5.08-GREEN-INV	50950197028D	50
20	103.10	AKZ950/20-5.08-GREEN-INV	50950207028D	50
21	108.18	AKZ950/21-5.08-GREEN-INV	50950217028D	50
22	113.26	AKZ950/22-5.08-GREEN-INV	50950227028D	50
23	118.34	AKZ950/23-5.08-GREEN-INV	50950237028D	50
24	123.42	AKZ950/24-5.08-GREEN-INV	50950247028D	50

RATINGS

	B	C	D		
Usegroup					
Rated Voltage	300 V	-	300 V	250 V	
Rated Current	15 A	-	10 A	10 A	
Overvoltage Category				III	
Rated Wire Size				min	max
solid	AWG 28-12	-	AWG 28-12	0.5 mm² (5 A)	2.5 mm² (10 A)
stranded	AWG 28-12	-	AWG 28-12	0.5 mm² (5 A)	2.5 mm² (10 A)
Torque (in.lbs)	4.43	-	4.43	4.43	
Screw Size	M3	-	M3	M3	
Test Voltage	1.6 kV	-	1.6 kV	4.0 kV	
Pollution Degree				3	

[1]Colours according to RAL, there may be variations on colour due to production conditions. Special colours on request.

Spacing 5.0 mm

AK1100/..-5.0-GREEN

WIRE SIZES	
solid min	0.2 mm²
solid max	4.0 mm²
stranded min	0.2 mm²
stranded max	2.5 mm²
stranded with ferrule min	0.25 mm²
stranded with ferrule max	2.5 mm²
DIMENSIONS	
Stripped Length	7.0 mm
PCB Hole Diameter	-
MATERIALS	
Clamp	Brass
Screw	Steel
Contact Spring	Bronze
INSULATING MATERIAL	
Material	PA 6.6
Flammability Class	UL 94 V-0
TEMPERATURES	
Operating Temperature (without mech. load)	-40 °C - 105 °C
WAVE SOLDERING PROCESS	
Soldering Temperature, recommended	-
Peak Soldering Time, recommended	-
REFLOW PROCESS	
Soldering Temperature, recommended	-
Peak Soldering Time, recommended	-



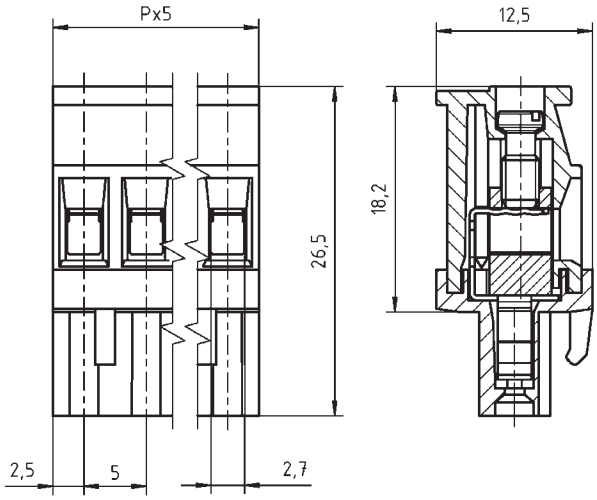

COLOURS[1]

GREEN, RAL 6018
LIGHT GREEN, similar RAL 6018
LIGHT GREY, RAL 7035

COUNTERPARTS (SPACING 5.0 MM)

Pin Strip

STL950 STL950-HT STL950-G-HT STL955 STL975

ORDER DATA (SPACING 5.0 MM)

Poles	Width (mm)	Article Designation	Article Number	PU
2	10.00	AK1100/2-5.0-GREEN	51100020021F	200
3	15.00	AK1100/3-5.0-GREEN	51100030021F	200
4	20.00	AK1100/4-5.0-GREEN	51100040021E	100
5	25.00	AK1100/5-5.0-GREEN	51100050021E	100
6	30.00	AK1100/6-5.0-GREEN	51100060021E	100
7	35.00	AK1100/7-5.0-GREEN	51100070021E	100
8	40.00	AK1100/8-5.0-GREEN	51100080021D	50
9	45.00	AK1100/9-5.0-GREEN	51100090021D	50
10	50.00	AK1100/10-5.0-GREEN	51100100021D	50
11	55.00	AK1100/11-5.0-GREEN	51100110021D	50
12	60.00	AK1100/12-5.0-GREEN	51100120021D	50
13	65.00	AK1100/13-5.0-GREEN	51100130021D	50
14	70.00	AK1100/14-5.0-GREEN	51100140021D	50
15	75.00	AK1100/15-5.0-GREEN	51100150021D	50
16	80.00	AK1100/16-5.0-GREEN	51100160021D	50
17	85.00	AK1100/17-5.0-GREEN	51100170021D	50
18	90.00	AK1100/18-5.0-GREEN	51100180021D	50
19	95.00	AK1100/19-5.0-GREEN	51100190021D	50
20	100.00	AK1100/20-5.0-GREEN	51100200021D	50

ACCESSORIES

	Description	Article Number
	Series AK(Z)1100 with pull relief	on request
	Bridge, 2-pole, insulated, BRI/2-5.0/5.08-LIGHT GREY	50000000006
	Bridge, 3-pole, insulated, BRI/3-5.0/5.08-LIGHT GREY	50000000007
	Coding Star CS1-5.0/5.08-RED	50000000021

RATINGS

	cULus			VDE	
Usegroup	B	C	D		
Rated Voltage	300 V	150 V	300 V	250 V	
Rated Current	15 A	15 A	10 A	10 A	
Overvoltage Category				III	
Rated Wire Size				min	max
solid	AWG 22-10	AWG 22-10	AWG 22-10	0.5 mm² (6 A)	2.5 mm² (10 A)
stranded	AWG 22-10	AWG 22-10	AWG 22-10	0.5 mm² (6 A)	2.5 mm² (10 A)
Torque (in.lbs)	4.43	4.43	4.43	4.43	
Screw Size	M3	M3	M3	M3	
Test Voltage	1.6 kV	1.3 kV	1.6 kV	4.0 kV	
Pollution Degree				3	

[1]Colours according to RAL, there may be variations on colour due to production conditions. Special colours on request.

L'IMPULSION
Retrouvez nous sur
www.limpulsion.fr

AKZ1100/..-5.08-GREEN

Spacing 5.08 mm



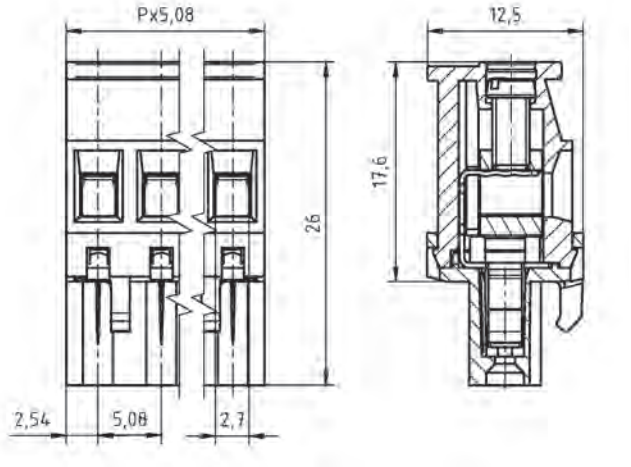

WIRE SIZES	
solid min	0.2 mm²
solid max	4.0 mm²
stranded min	0.2 mm²
stranded max	2.5 mm²
stranded with ferrule min	0.25 mm²
stranded with ferrule max	2.5 mm²
DIMENSIONS	
Stripped Length	7.0 mm
PCB Hole Diameter	-
MATERIALS	
Clamp	Brass
Screw	Steel
Contact Spring	Bronze
INSULATING MATERIAL	
Material	PA 6.6
Flammability Class	UL 94 V-0
TEMPERATURES	
Operating Temperature (without mech. load)	-40 °C - 105 °C
WAVE SOLDERING PROCESS	
Soldering Temperature, recommended	-
Peak Soldering Time, recommended	-
REFLOW PROCESS	
Soldering Temperature, recommended	-
Peak Soldering Time, recommended	-

COLOURS[1]

GREEN, RAL 6018	LIGHT GREY, RAL 7035
LIGHT GREEN, similar RAL 6018	

ACCESSORIES

	Description	Article Number
	Series AK(Z)1100 with pull relief	on request
	Bridge, 2-pole, insulated, BRI/2-5.0/5.08-LIGHT GREY	50000000006
	Bridge, 3-pole, insulated, BRI/3-5.0/5.08-LIGHT GREY	50000000007
	Coding Star CS1-5.0/5.08-RED	50000000021

RATINGS

	cULus			VDE	
Usegroup	B	C	D		
Rated Voltage	300 V	150 V	300 V	250 V	
Rated Current	15 A	15 A	10 A	10 A	
Overvoltage Category				III	
Rated Wire Size				min	max
solid	AWG 22-10	AWG 22-10	AWG 22-10	0.5 mm² (6 A)	2.5 mm² (10 A)
stranded	AWG 22-10	AWG 22-10	AWG 22-10	0.5 mm² (6 A)	2.5 mm² (10 A)
Torque (in.lbs)	4.43	4.43	4.43	4.43	
Screw Size	M3	M3	M3	M3	
Test Voltage	1.6 kV	1.3 kV	1.6 kV	4.0 kV	
Pollution Degree				3	

COUNTERPARTS (SPACING 5.08 MM)

Pin Strip / PCB Terminal Block

STLZ950 STLZ950-HT STLZ950-G-HT STLZ970 STLZ990 AKZ950 AKZS950

ORDER DATA (SPACING 5.08 MM)

Poles	Width (mm)	Article Designation	Article Number	PU
2	10.16	AKZ1100/2-5.08-GREEN	51100020001F	200
3	15.24	AKZ1100/3-5.08-GREEN	51100030001F	200
4	20.32	AKZ1100/4-5.08-GREEN	51100040001E	100
5	25.40	AKZ1100/5-5.08-GREEN	51100050001E	100
6	30.48	AKZ1100/6-5.08-GREEN	51100060001E	100
7	35.56	AKZ1100/7-5.08-GREEN	51100070001E	100
8	40.64	AKZ1100/8-5.08-GREEN	51100080001D	50
9	45.72	AKZ1100/9-5.08-GREEN	51100090001D	50
10	50.80	AKZ1100/10-5.08-GREEN	51100100001D	50
11	55.88	AKZ1100/11-5.08-GREEN	51100110001D	50
12	60.96	AKZ1100/12-5.08-GREEN	51100120001D	50
13	66.04	AKZ1100/13-5.08-GREEN	51100130001D	50
14	71.12	AKZ1100/14-5.08-GREEN	51100140001D	50
15	76.20	AKZ1100/15-5.08-GREEN	51100150001D	50
16	81.28	AKZ1100/16-5.08-GREEN	51100160001D	50
17	86.36	AKZ1100/16-5.08-GREEN	51100170001D	50
18	91.44	AKZ1100/16-5.08-GREEN	51100180001D	50
19	96.52	AKZ1100/16-5.08-GREEN	51100190001D	50
20	101.60	AKZ1100/16-5.08-GREEN	51100200001D	50

[1]Colours according to RAL, there may be variations on colour due to production conditions. Special colours on request.

Spacing 5.08 mm

AKZ1100/..F-5.08-GREEN

WIRE SIZES	
solid min	0.2 mm²
solid max	4.0 mm²
stranded min	0.2 mm²
stranded max	4.0 mm²
stranded with ferrule min	0.25 mm²
stranded with ferrule max	2.5 mm²
DIMENSIONS	
Stripped Length	7.0 mm
PCB Hole Diameter	-
MATERIALS	
Clamp	Brass
Screw	Steel
Contact Spring	Bronze
INSULATING MATERIAL	
Material	PA 6.6
Flammability Class	UL 94 V-0
TEMPERATURES	
Operating Temperature (without mech. load)	-40 °C - 105 °C
WAVE SOLDERING PROCESS	
Soldering Temperature, recommended	-
Peak Soldering Time, recommended	-
REFLOW PROCESS	
Soldering Temperature, recommended	-
Peak Soldering Time, recommended	-



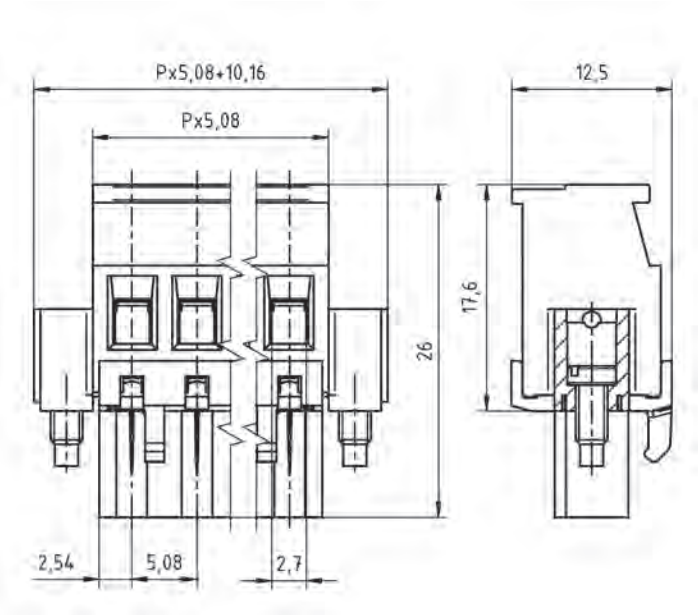

COLOURS[1]

GREEN, RAL 6018

LIGHT GREEN, similar RAL 6018

COUNTERPARTS (SPACING 5.08 MM)

Pin Strip / PCB Terminal Block

STLZ950 STLZ950-HT STLZ970 AKZS950

ORDER DATA (SPACING 5.08 MM)

Poles	Width (mm)	Article Designation	Article Number	PU
2	20.32	AKZ1100/2F-5.08-GREEN	51100022001F	200
3	25.40	AKZ1100/3F-5.08-GREEN	51100032001F	200
4	30.48	AKZ1100/4F-5.08-GREEN	51100042001E	100
5	35.56	AKZ1100/5F-5.08-GREEN	51100052001E	100
6	40.64	AKZ1100/6F-5.08-GREEN	51100062001E	100
7	45.72	AKZ1100/7F-5.08-GREEN	51100072001E	100
8	50.80	AKZ1100/8F-5.08-GREEN	51100082001E	100
9	55.88	AKZ1100/9F-5.08-GREEN	51100092001D	50
10	60.96	AKZ1100/10F-5.08-GREEN	51100102001D	50
11	66.04	AKZ1100/11F-5.08-GREEN	51100112001D	50
12	71.12	AKZ1100/12F-5.08-GREEN	51100122001D	50
13	76.20	AKZ1100/13F-5.08-GREEN	51100132001D	50
14	81.28	AKZ1100/14F-5.08-GREEN	51100142001D	50
15	86.36	AKZ1100/15F-5.08-GREEN	51100152001D	50
16	91.44	AKZ1100/16F-5.08-GREEN	51100162001D	50
17	96.52	AKZ1100/17F-5.08-GREEN	51100172001D	50
18	101.60	AKZ1100/18F-5.08-GREEN	51100182001D	50
19	106.68	AKZ1100/19F-5.08-GREEN	51100192001D	50
20	111.76	AKZ1100/20F-5.08-GREEN	51100202001D	50

ACCESSORIES

	Description	Article Number
	Bridge, 2-pole, insulated, BRI/2-5.0/5.08-LIGHT GREY	50000000006
	Bridge, 3-pole, insulated, BRI/3-5.0/5.08-LIGHT GREY	50000000007
	Coding Star CS4-5.0/5.08-RED	50000000026
	Series AK(Z)1100 with separating element	on request

RATINGS

Usegroup	B	C	D		
Rated Voltage	300 V	-	300 V	250 V	
Rated Current	15 A	-	10 A	10 A	
Overvoltage Category				III	
Rated Wire Size				min	max
solid	AWG 28-12	-	AWG 28-12	0.5 mm² (6 A)	2.5 mm² (10 A)
stranded	AWG 28-12	-	AWG 28-12	0.5 mm² (6 A)	2.5 mm² (10 A)
Torque (in.lbs)	4.43	-	4.43	4.43	
Screw Size	M3	-	M3	M3	
Test Voltage	1.6 kV	-	1.6 kV	4.0 kV	
Pollution Degree				3	

[1]Colours according to RAL, there may be variations on colour due to production conditions. Special colours on request.

L'IMPULSION Retrouvez nous sur www.limpulsion.fr

AK1110/..-5.0-GREEN

Spacing 5.0 mm



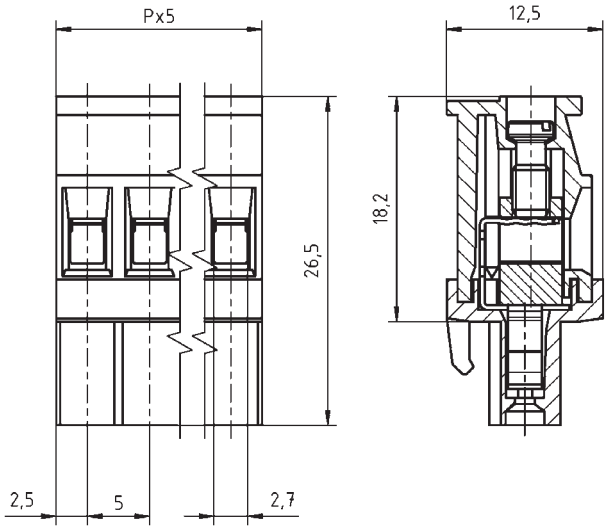

WIRE SIZES	
solid min	0.2 mm²
solid max	4.0 mm²
stranded min	0.2 mm²
stranded max	2.5 mm²
stranded with ferrule min	0.25 mm²
stranded with ferrule max	2.5 mm²
DIMENSIONS	
Stripped Length	7.0 mm
PCB Hole Diameter	-
MATERIALS	
Clamp	Brass
Screw	Steel
Contact Spring	Bronze
INSULATING MATERIAL	
Material	PA 6.6
Flammability Class	UL 94 V-0
TEMPERATURES	
Operating Temperature (without mech. load)	-40 °C - 105 °C
WAVE SOLDERING PROCESS	
Soldering Temperature, recommended	-
Peak Soldering Time, recommended	-
REFLOW PROCESS	
Soldering Temperature, recommended	-
Peak Soldering Time, recommended	-

COLOURS[1]

GREEN, RAL 6018	LIGHT GREY, RAL 7035
LIGHT GREEN, similar RAL 6018	

ACCESSORIES

	Description	Article Number
	Series AK(Z)1110 with pull relief	on request
	Bridge, 2-pole, insulated, BRI/2-5.0/5.08-LIGHT GREY	50000000006
	Bridge, 3-pole, insulated, BRI/3-5.0/5.08-LIGHT GREY	50000000007
	Coding Star CS1-5.0/5.08-RED	50000000021

COUNTERPARTS (SPACING 5.0 MM)

Pin Strip

STL950 STL950-HT STL950-G-HT STL955 STL975

ORDER DATA (SPACING 5.0 MM)

Poles	Width (mm)	Article Designation	Article Number	PU
2	10.00	AK1110/2-5.0-GREEN	51110020021F	200
3	15.00	AK1110/3-5.0-GREEN	51110030021F	200
4	20.00	AK1110/4-5.0-GREEN	51110040021E	100
5	25.00	AK1110/5-5.0-GREEN	51110050021E	100
6	30.00	AK1110/6-5.0-GREEN	51110060021E	100
7	35.00	AK1110/7-5.0-GREEN	51110070021E	100
8	40.00	AK1110/8-5.0-GREEN	51110080021D	50
9	45.00	AK1110/9-5.0-GREEN	51110090021D	50
10	50.00	AK1110/10-5.0-GREEN	51110100021D	50
11	55.00	AK1110/11-5.0-GREEN	51110110021D	50
12	60.00	AK1110/12-5.0-GREEN	51110120021D	50
13	65.00	AK1110/13-5.0-GREEN	51110130021D	50
14	70.00	AK1110/14-5.0-GREEN	51110140021D	50
15	75.00	AK1110/15-5.0-GREEN	51110150021D	50
16	80.00	AK1110/16-5.0-GREEN	51110160021D	50
17	85.00	AK1110/17-5.0-GREEN	51110170021D	50
18	90.00	AK1110/18-5.0-GREEN	51110180021D	50
19	95.00	AK1110/19-5.0-GREEN	51110190021D	50
20	100.00	AK1110/20-5.0-GREEN	51110200021D	50

RATINGS

Usegroup	B	C	D		
Rated Voltage	300 V	150 V	300 V	250 V	
Rated Current	15 A	15 A	10 A	10 A	
Overvoltage Category				III	
Rated Wire Size				min	max
solid	AWG 22-10	AWG 22-10	AWG 22-10	0.5 mm² (6 A)	2.5 mm² (10 A)
stranded	AWG 22-10	AWG 22-10	AWG 22-10	0.5 mm² (6 A)	2.5 mm² (10 A)
Torque (in.lbs)	4.43	4.43	4.43	4.43	
Screw Size	M3	M3	M3	M3	
Test Voltage	1.6 kV	1.3 kV	1.6 kV	4.0 kV	
Pollution Degree				3	

[1]Colours according to RAL, there may be variations on colour due to production conditions. Special colours on request.

Spacing 5.08 mm

AKZ1110/..-5.08-GREEN

WIRE SIZES	
solid min	0.2 mm²
solid max	4.0 mm²
stranded min	0.2 mm²
stranded max	2.5 mm²
stranded with ferrule min	0.25 mm²
stranded with ferrule max	2.5 mm²
DIMENSIONS	
Stripped Length	7.0 mm
PCB Hole Diameter	-
MATERIALS	
Clamp	Brass
Screw	Steel
Contact Spring	Bronze
INSULATING MATERIAL	
Material	PA 6.6
Flammability Class	UL 94 V-0
TEMPERATURES	
Operating Temperature (without mech. load)	-40 °C - 105 °C
WAVE SOLDERING PROCESS	
Soldering Temperature, recommended	-
Peak Soldering Time, recommended	-
REFLOW PROCESS	
Soldering Temperature, recommended	-
Peak Soldering Time, recommended	-



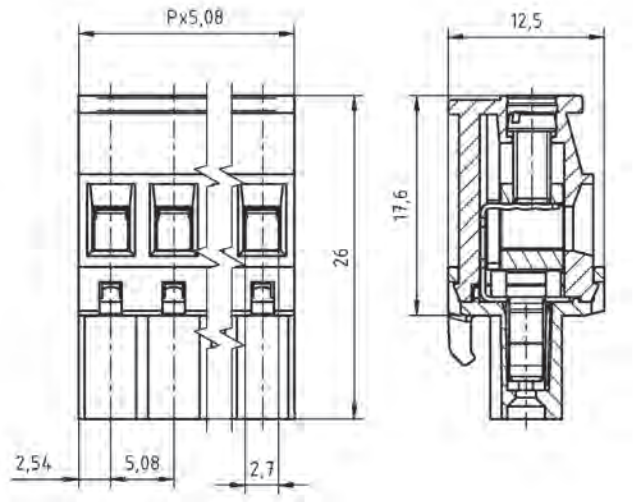

COLOURS[1]

GREEN, RAL 6018
LIGHT GREEN, similar RAL 6018
LIGHT GREY, RAL 7035

COUNTERPARTS (SPACING 5.08 MM)

Pin Strip / PCB Terminal Block

STLZ950 STLZ950-HT STLZ950-G-HT STLZ970 STLZ990 AKZ950 AKZS950

ORDER DATA (SPACING 5.08 MM)

Poles	Width (mm)	Article Designation	Article Number	PU
2	10.16	AKZ1110/2-5.08-GREEN	51110020001F	200
3	15.24	AKZ1110/3-5.08-GREEN	51110030001F	200
4	20.32	AKZ1110/4-5.08-GREEN	51110040001E	100
5	25.40	AKZ1110/5-5.08-GREEN	51110050001E	100
6	30.48	AKZ1110/6-5.08-GREEN	51110060001E	100
7	35.56	AKZ1110/7-5.08-GREEN	51110070001E	100
8	40.64	AKZ1110/8-5.08-GREEN	51110080001D	50
9	45.72	AKZ1110/9-5.08-GREEN	51110090001D	50
10	50.80	AKZ1110/10-5.08-GREEN	51110100001D	50
11	55.88	AKZ1110/11-5.08-GREEN	51110110001D	50
12	60.96	AKZ1110/12-5.08-GREEN	51110120001D	50
13	66.04	AKZ1110/13-5.08-GREEN	51110130001D	50
14	71.12	AKZ1110/14-5.08-GREEN	51110140001D	50
15	76.20	AKZ1110/15-5.08-GREEN	51110150001D	50
16	81.28	AKZ1110/16-5.08-GREEN	51110160001D	50
17	86.36	AKZ1110/17-5.08-GREEN	51110170001D	50
18	91.44	AKZ1110/18-5.08-GREEN	51110180001D	50
19	96.52	AKZ1110/19-5.08-GREEN	51110190001D	50
20	101.60	AKZ1110/20-5.08-GREEN	51110200001D	50

ACCESSORIES

	Description	Article Number
	Series AK(Z)1110 with pull relief	on request
	Bridge, 2-pole, insulated, BRI/2-5.0/5.08-LIGHT GREY	50000000006
	Bridge, 3-pole, insulated, BRI/3-5.0/5.08-LIGHT GREY	50000000007
	Coding Star CS1-5.0/5.08-RED	50000000021

RATINGS

	cULus			VDE	
Usegroup	B	C	D		
Rated Voltage	300 V	150 V	300 V	250 V	
Rated Current	15 A	15 A	10 A	10 A	
Overvoltage Category				III	
Rated Wire Size				min	max
solid	AWG 22-10	AWG 22-10	AWG 22-10	0.5 mm² (6 A)	2.5 mm² (10 A)
stranded	AWG 22-10	AWG 22-10	AWG 22-10	0.5 mm² (6 A)	2.5 mm² (10 A)
Torque (in.lbs)	4.43	4.43	4.43	4.43	
Screw Size	M3	M3	M3	M3	
Test Voltage	1.6 kV	1.3 kV	1.6 kV	4.0 kV	
Pollution Degree				3	

[1]Colours according to RAL, there may be variations on colour due to production conditions. Special colours on request.

L'IMPULSION
Retrouvez nous sur
www.limpulsion.fr

AKZ1110/..F-5.08-GREEN

Spacing 5.08 mm



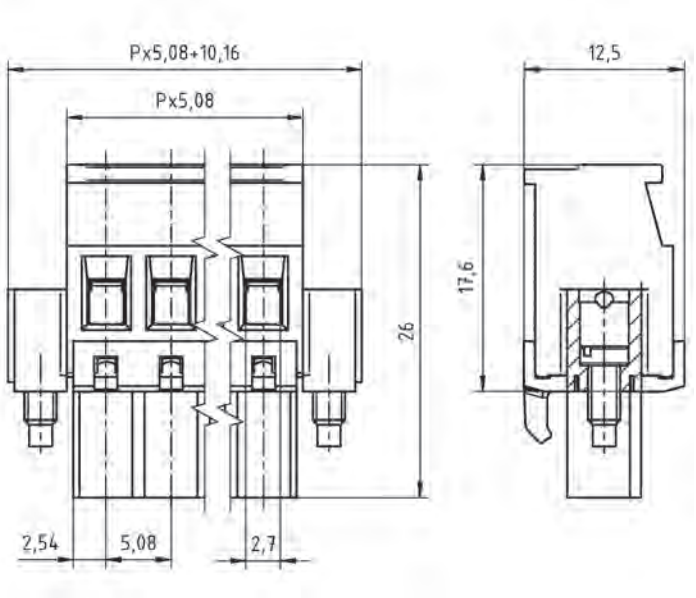

WIRE SIZES	
solid min	0.2 mm²
solid max	4.0 mm²
stranded min	0.2 mm²
stranded max	4.0 mm²
stranded with ferrule min	0.25 mm²
stranded with ferrule max	2.5 mm²
DIMENSIONS	
Stripped Length	7.0 mm
PCB Hole Diameter	-
MATERIALS	
Clamp	Brass
Screw	Steel
Contact Spring	Bronze
INSULATING MATERIAL	
Material	PA 6.6
Flammability Class	UL 94 V-0
TEMPERATURES	
Operating Temperature (without mech. load)	-40 °C - 105 °C
WAVE SOLDERING PROCESS	
Soldering Temperature, recommended	-
Peak Soldering Time, recommended	-
REFLOW PROCESS	
Soldering Temperature, recommended	-
Peak Soldering Time, recommended	-

COLOURS[1]

GREEN, RAL 6018

LIGHT GREEN, similar RAL 6018

ACCESSORIES

	Description	Article Number
	Series AK(Z)1110 with pull relief	on request
	Bridge, 2-pole, insulated, BRI/2-5.0/5.08-LIGHT GREY	50000000006
	Bridge, 3-pole, insulated, BRI/3-5.0/5.08-LIGHT GREY	50000000007
	Coding Star CS4-5.0/5.08-RED	50000000026

RATINGS

		c UL us		VDE	
Usegroup	B	C	D		
Rated Voltage	300 V	-	300 V	250 V	
Rated Current	15 A	-	10 A	10 A	
Overvoltage Category				III	
Rated Wire Size				min	max
solid	AWG 28-12	-	AWG 28-12	0.5 mm² (6 A)	2.5 mm² (10 A)
stranded	AWG 28-12	-	AWG 28-12	0.5 mm² (6 A)	2.5 mm² (10 A)
Torque (in.lbs)	4.43	-	4.43	4.43	
Screw Size	M3	-	M3	M3	
Test Voltage	1.6 kV	-	1.6 kV	4.0 kV	
Pollution Degree				3	

COUNTERPARTS (SPACING 5.08 MM)

Pin Strip / PCB Terminal Block

STLZ950 STLZ950-HT STLZ970 AKZS950

ORDER DATA (SPACING 5.08 MM)

Poles	Width (mm)	Article Designation	Article Number	PU
2	20.32	AKZ1110/2F-5.08-GREEN	51110022001F	200
3	25.40	AKZ1110/3F-5.08-GREEN	51110032001F	200
4	30.48	AKZ1110/4F-5.08-GREEN	51110042001E	100
5	35.56	AKZ1110/5F-5.08-GREEN	51110052001E	100
6	40.64	AKZ1110/6F-5.08-GREEN	51110062001E	100
7	45.72	AKZ1110/7F-5.08-GREEN	51110072001E	100
8	50.80	AKZ1110/8F-5.08-GREEN	51110082001E	100
9	55.88	AKZ1110/9F-5.08-GREEN	51110092001D	50
10	60.96	AKZ1110/10F-5.08-GREEN	51110102001D	50
11	66.04	AKZ1110/11F-5.08-GREEN	51110112001D	50
12	71.12	AKZ1110/12F-5.08-GREEN	51110122001D	50
13	76.20	AKZ1110/13F-5.08-GREEN	51110132001D	50
14	81.28	AKZ1110/14F-5.08-GREEN	51110142001D	50
15	86.36	AKZ1110/15F-5.08-GREEN	51110152001D	50
16	91.44	AKZ1110/16F-5.08-GREEN	51110162001D	50
17	96.52	AKZ1110/17F-5.08-GREEN	51110172001D	50
18	101.60	AKZ1110/18F-5.08-GREEN	51110182001D	50
19	106.68	AKZ1110/19F-5.08-GREEN	51110192001D	50
20	111.76	AKZ1110/20F-5.08-GREEN	51110202001D	50

[1]Colours according to RAL, there may be variations on colour due to production conditions. Special colours on request.

Spacing 5.08 mm
TS 32/3519- to 24-poles on request

AKZS950/..G-5.08-GREEN

WIRE SIZES	
solid min	0.2 mm²
solid max	4.0 mm²
stranded min	0.2 mm²
stranded max	2.5 mm²
stranded with ferrule min	0.25 mm²
stranded with ferrule max	2.5 mm²
DIMENSIONS	
Stripped Length	6.0 mm
PCB Hole Diameter	-
MATERIALS	
Clamp	Brass
Screw	Steel
Contact Tag	Copper Alloy
INSULATING MATERIAL	
Material	PA 6.6
Flammability Class	UL 94 V-0
TEMPERATURES	
Operating Temperature (without mech. load)	-40 °C - 105 °C
WAVE SOLDERING PROCESS	
Soldering Temperature, recommended	-
Peak Soldering Time, recommended	-
REFLOW PROCESS	
Soldering Temperature, recommended	-
Peak Soldering Time, recommended	-



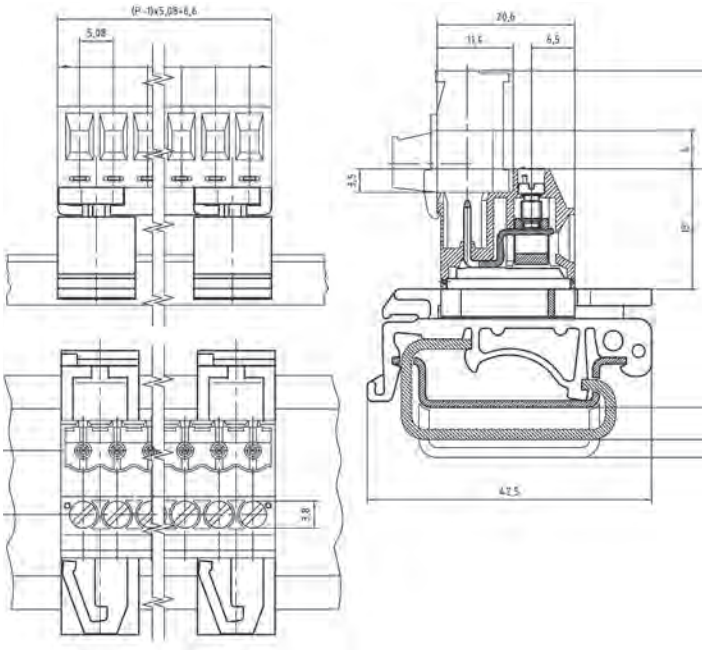

COLOURS[1]

GREEN, RAL 6018 — LIGHT GREEN, similar RAL 6018

COUNTERPARTS (SPACING 5.08 MM)

Pin Strip / PCB Terminal Block

STLZ950-INV AKZ950 AKZ1100 AKZ1110 AKZ1200 AKZ4951

ORDER DATA (SPACING 5.08 MM)

Poles	Width (mm)	Article Designation	Article Number	PU
2	11.68	AKZS950/2G-5.08-GREEN	50950027021E	100
3	16.76	AKZS950/3G-5.08-GREEN	50950037021E	100
4	21.84	AKZS950/4G-5.08-GREEN	50950047021E	100
5	26.92	AKZS950/5G-5.08-GREEN	50950057021E	100
6	32.00	AKZS950/6G-5.08-GREEN	50950067021D	50
7	37.08	AKZS950/7G-5.08-GREEN	50950077021D	50
8	42.16	AKZS950/8G-5.08-GREEN	50950087021D	50
9	47.24	AKZS950/9G-5.08-GREEN	50950097021D	50
10	52.32	AKZS950/10G-5.08-GREEN	50950107021D	50
11	57.40	AKZS950/11G-5.08-GREEN	50950117021N	25
12	62.48	AKZS950/12G-5.08-GREEN	50950127021N	25
13	67.56	AKZS950/13G-5.08-GREEN	50950137021N	25
14	72.64	AKZS950/14G-5.08-GREEN	50950147021N	25
15	77.72	AKZS950/15G-5.08-GREEN	50950157021N	25
16	82.80	AKZS950/16G-5.08-GREEN	50950167021N	25
17	87.88	AKZS950/17G-5.08-GREEN	50950177021N	25
18	92.96	AKZS950/18G-5.08-GREEN	50950187021N	25

ACCESSORIES

	Description	Article Number
	Bridge, 2-pole, insulated, BRI/2-5.0/5.08-LIGHT GREY	50000000006
	Bridge, 3-pole, insulated, BRI/3-5.0/5.08-LIGHT GREY	50000000007
	Coding Star CS2-5.0/5.08-RED	50000000024
	Separating Element SE-STL950-GREEN	50950000002

RATINGS

	c UL us			VDE	
Usegroup	B	C	D		
Rated Voltage	300 V	150 V	300 V	250 V	
Rated Current	15 A	15 A	10 A	12 A	
Overvoltage Category				III	
Rated Wire Size				min	max
solid	AWG 28-12	AWG 28-12	AWG 28-12	0.5 mm² (5 A)	2.5 mm² (12 A)
stranded	AWG 28-12	AWG 28-12	AWG 28-12	0.5 mm² (5 A)	2.5 mm² (12 A)
Torque (in.lbs)	3.98	3.98	3.98	4.43	
Screw Size	M3	M3	M3	M3	
Test Voltage	1.6 kV	1.3 kV	1.6 kV	4.0 kV	
Pollution Degree				3	

[1]Colours according to RAL, there may be variations on colour due to production conditions. Special colours on request.

L'IMPULSION
Retrouvez nous sur
www.limpulsion.fr

AKZS950/..F-5.08-GREEN

Spacing 5.08 mm
TS 32/3519- to 24-poles on request



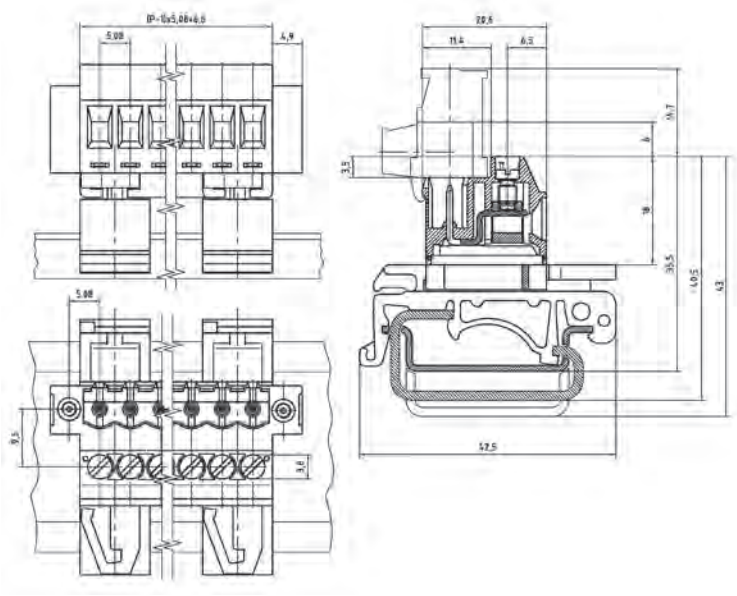

WIRE SIZES	
solid min	0.2 mm²
solid max	4.0 mm²
stranded min	0.2 mm²
stranded max	2.5 mm²
stranded with ferrule min	0.25 mm²
stranded with ferrule max	2.5 mm²
DIMENSIONS	
Stripped Length	6.0 mm
PCB Hole Diameter	-
MATERIALS	
Clamp	Brass
Screw	Steel
Thread Insert, Flange	Brass
Contact Tag	Copper Alloy
INSULATING MATERIAL	
Material	PA 6.6
Flammability Class	UL 94 V-0
TEMPERATURES	
Operating Temperature (without mech. load)	-40 °C - 105 °C
WAVE SOLDERING PROCESS	
Soldering Temperature, recommended	-
Peak Soldering Time, recommended	-
REFLOW PROCESS	
Soldering Temperature, recommended	-
Peak Soldering Time, recommended	-

COLOURS[1]

GREEN, RAL 6018 — LIGHT GREEN, similar RAL 6018

ACCESSORIES

	Description	Article Number
	Bridge, 2-pole, insulated, BRI/2-5.0/5.08-LIGHT GREY	50000000006
	Bridge, 3-pole, insulated, BRI/3-5.0/5.08-LIGHT GREY	50000000007
	Coding Star CS2-5.0/5.08-RED	50000000024
	Separating Element SE-STL950-GREEN	50950000002

COUNTERPARTS (SPACING 5.08 MM)

PCB Terminal Block

AKZ950 AKZ1100 AKZ1110 AKZ4951

RATINGS

Usegroup	B	C	D		
Rated Voltage	300 V	150 V	300 V	250 V	
Rated Current	15 A	15 A	10 A	12 A	
Overvoltage Category				III	
Rated Wire Size				min	max
solid	AWG 28-12	AWG 28-12	AWG 28-12	0.5 mm² (5 A)	2.5 mm² (12 A)
stranded	AWG 28-12	AWG 28-12	AWG 28-12	0.5 mm² (5 A)	2.5 mm² (12 A)
Torque (in.lbs)	3.98	3.98	3.98	4.43	
Screw Size	M3	M3	M3	M3	
Test Voltage	1.6 kV	1.3 kV	1.6 kV	4.0 kV	
Pollution Degree				3	

ORDER DATA (SPACING 5.08 MM)

Poles	Width (mm)	Article Designation	Article Number	PU
2	21.48	AKZS950/2F-5.08-GREEN	50950027022E	100
3	26.56	AKZS950/3F-5.08-GREEN	50950037022E	100
4	31.64	AKZS950/4F-5.08-GREEN	50950047022E	100
5	36.72	AKZS950/5F-5.08-GREEN	50950057022E	100
6	41.80	AKZS950/6F-5.08-GREEN	50950067022D	50
7	46.88	AKZS950/7F-5.08-GREEN	50950077022D	50
8	51.96	AKZS950/8F-5.08-GREEN	50950087022D	50
9	57.04	AKZS950/9F-5.08-GREEN	50950097022D	50
10	62.12	AKZS950/10F-5.08-GREEN	50950107022D	50
11	67.20	AKZS950/11F-5.08-GREEN	50950117022N	25
12	72.28	AKZS950/12F-5.08-GREEN	50950127022N	25
13	77.36	AKZS950/13F-5.08-GREEN	50950137022N	25
14	82.44	AKZS950/14F-5.08-GREEN	50950147022N	25
15	87.52	AKZS950/15F-5.08-GREEN	50950157022N	25
16	92.60	AKZS950/16F-5.08-GREEN	50950167022N	25
17	97.68	AKZS950/17F-5.08-GREEN	50950177022N	25
18	102.76	AKZS950/18F-5.08-GREEN	50950187022N	25

[1]Colours according to RAL, there may be variations on colour due to production conditions. Special colours on request.

Spacing 5.08 mm
13- to 24-poles on request

AKZS950/..GMB-5.08-GREEN

WIRE SIZES	
solid min	0.2 mm²
solid max	4.0 mm²
stranded min	0.2 mm²
stranded max	2.5 mm²
stranded with ferrule min	0.25 mm²
stranded with ferrule max	2.5 mm²
DIMENSIONS	
Stripped Length	6.0 mm
PCB Hole Diameter	-
MATERIALS	
Clamp	Brass
Screw	Steel
Contact Tag	Copper Alloy
INSULATING MATERIAL	
Material	PA 6.6
Flammability Class	UL 94 V-0
TEMPERATURES	
Operating Temperature (without mech. load)	-40 °C - 105 °C
WAVE SOLDERING PROCESS	
Soldering Temperature, recommended	-
Peak Soldering Time, recommended	-
REFLOW PROCESS	
Soldering Temperature, recommended	-
Peak Soldering Time, recommended	-



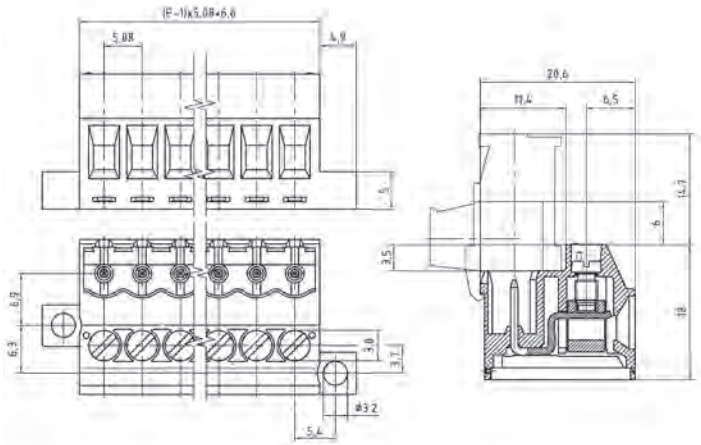

COLOURS[1]

GREEN, RAL 6018 — LIGHT GREEN, similar RAL 6018

COUNTERPARTS (SPACING 5.08 MM)

Pin Strip / PCB Terminal Block

STLZ950-INV AKZ950 AKZ1100 AKZ1110 AKZ1200 AKZ4951

ORDER DATA (SPACING 5.08 MM)

Poles	Width (mm)	Article Designation	Article Number	PU
2	21.48	AKZS950/2GMB-5.08-GREEN	50950027041D	50
3	26.56	AKZS950/3GMB-5.08-GREEN	50950037041D	50
4	31.64	AKZS950/4GMB-5.08-GREEN	50950047041D	50
5	36.72	AKZS950/5GMB-5.08-GREEN	50950057041D	50
6	41.80	AKZS950/6GMB-5.08-GREEN	50950067041D	50
7	46.88	AKZS950/7GMB-5.08-GREEN	50950077041D	50
8	51.96	AKZS950/8GMB-5.08-GREEN	50950087041D	50
9	57.04	AKZS950/9GMB-5.08-GREEN	50950097041D	50
10	62.12	AKZS950/10GMB-5.08-GREEN	50950107041D	50
11	67.20	AKZS950/11GMB-5.08-GREEN	50950117041D	50
12	72.28	AKZS950/12GMB-5.08-GREEN	50950127041D	50

ACCESSORIES

	Description	Article Number
	Bridge, 2-pole, insulated, BRI/2-5.0/5.08-LIGHT GREY	50000000006
	Bridge, 3-pole, insulated, BRI/3-5.0/5.08-LIGHT GREY	50000000007
	Coding Star CS2-5.0/5.08-RED	50000000024
	Separating Element SE-STL950-GREEN	50950000002

RATINGS

	c UL us			VDE	
Usegroup	B	C	D		
Rated Voltage	300 V	150 V	300 V	250 V	
Rated Current	15 A	15 A	10 A	12 A	
Overvoltage Category				III	
Rated Wire Size				min	max
solid	AWG 28-12	AWG 28-12	AWG 28-12	0.5 mm² (5 A)	2.5 mm² (12 A)
stranded	AWG 28-12	AWG 28-12	AWG 28-12	0.5 mm² (5 A)	2.5 mm² (12 A)
Torque (in.lbs)	3.98	3.98	3.98	4.43	
Screw Size	M3	M3	M3	M3	
Test Voltage	1.6 kV	1.3 kV	1.6 kV	4.0 kV	
Pollution Degree				3	

[1]Colours according to RAL, there may be variations on colour due to production conditions. Special colours on request.

L'IMPULSION
Retrouvez nous sur
www.limpulsion.fr

AKZ960/..-7.62-GREEN

Spacing 7.62 mm



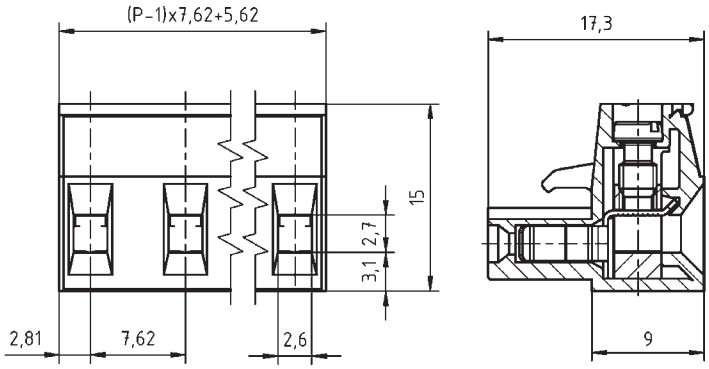

WIRE SIZES	
solid min	0.2 mm²
solid max	4.0 mm²
stranded min	0.2 mm²
stranded max	2.5 mm²
stranded with ferrule min	0.25 mm²
stranded with ferrule max	2.5 mm²
DIMENSIONS	
Stripped Length	6.0 mm
PCB Hole Diameter	-
MATERIALS	
Clamp	Brass
Screw	Steel
Contact Spring	Bronze
INSULATING MATERIAL	
Material	PA 6.6
Flammability Class	UL 94 V-0
TEMPERATURES	
Operating Temperature (without mech. load)	-40 °C - 105 °C
WAVE SOLDERING PROCESS	
Soldering Temperature, recommended	-
Peak Soldering Time, recommended	-
REFLOW PROCESS	
Soldering Temperature, recommended	-
Peak Soldering Time, recommended	-

COLOURS[1]

- GREEN, RAL 6018
- LIGHT GREY, RAL 7035
- LIGHT GREEN, similar RAL 6018

ACCESSORIES

	Description	Article Number
	Bridge, 2-pole, insulated, BRI/2-7.5/7.62-L8.2-LIGHT GREY	50000000017
	Coding Star CS1-5.0/5.08-RED	50000000021
	Series AK(Z)960 with Separating Element	on request
	Series AKZ960 with pull relief	on request

RATINGS

	B	C	D		
Usegroup					
Rated Voltage	300 V	150 V	300 V	400 V	
Rated Current	15 A	15 A	10 A	12 A	
Overvoltage Category				III	
Rated Wire Size				min	max
solid	AWG 22-12	AWG 22-12	AWG 22-12	0.5 mm² (5 A)	2.5 mm² (12 A)
stranded	AWG 22-12	AWG 22-12	AWG 22-12	0.5 mm² (5 A)	2.5 mm² (12 A)
Torque (in.lbs)	4.43	4.43	4.43	4.43	
Screw Size	M3	M3	M3	M3	
Test Voltage	1.6 kV	1.3 kV	1.6 kV	4.0 kV	
Pollution Degree				3	

COUNTERPARTS (SPACING 7.62 MM

Pin Strip
STLZ960

ORDER DATA (SPACING 7.62 MM)

Poles	Width (mm)	Article Designation	Article Number	PU
2	13.24	AKZ960/2-7.62-GREEN	50960020021E	100
3	20.86	AKZ960/3-7.62-GREEN	50960030021E	100
4	28.48	AKZ960/4-7.62-GREEN	50960040021E	100
5	36.10	AKZ960/5-7.62-GREEN	50960050021E	100
6	43.72	AKZ960/6-7.62-GREEN	50960060021D	50
7	51.34	AKZ960/7-7.62-GREEN	50960070021D	50
8	58.96	AKZ960/8-7.62-GREEN	50960080021D	50
9	66.58	AKZ960/9-7.62-GREEN	50960090021D	50
10	74.20	AKZ960/10-7.62-GREEN	50960100021D	50
11	81.82	AKZ960/11-7.62-GREEN	50960110021D	50
12	89.44	AKZ960/12-7.62-GREEN	50960120021D	50
13	97.06	AKZ960/13-7.62-GREEN	50960130021D	50
14	104.68	AKZ960/14-7.62-GREEN	50960140021D	50
15	112.30	AKZ960/15-7.62-GREEN	50960150021D	50
16	119.92	AKZ960/16-7.62-GREEN	50960160021D	50

[1]Colours according to RAL, there may be variations on colour due to production conditions. Special colours on request.

Spacing 7.62 mm

AKZ960/..-7.62-GREEN-HC

NEW

WIRE SIZES	
solid min	0.2 mm²
solid max	4.0 mm²
stranded min	0.2 mm²
stranded max	2.5 mm²
stranded with ferrule min	0.25 mm²
stranded with ferrule max	2.5 mm²
DIMENSIONS	
Stripped Length	6.0 mm
PCB Hole Diameter	-
MATERIALS	
Clamp	Brass
Screw	Steel
Contact Spring	Copper Alloy
INSULATING MATERIAL	
Material	PA 6.6
Flammability Class	UL 94 V-0
TEMPERATURES	
Operating Temperature (without mech. load)	-40 °C - 105 °C
WAVE SOLDERING PROCESS	
Soldering Temperature, recommended	-
Peak Soldering Time, recommended	-
REFLOW PROCESS	
Soldering Temperature, recommended	-
Peak Soldering Time, recommended	-

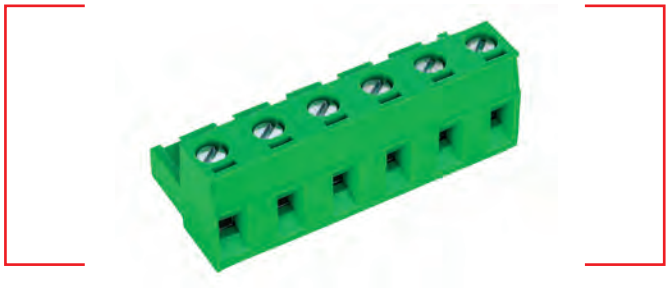

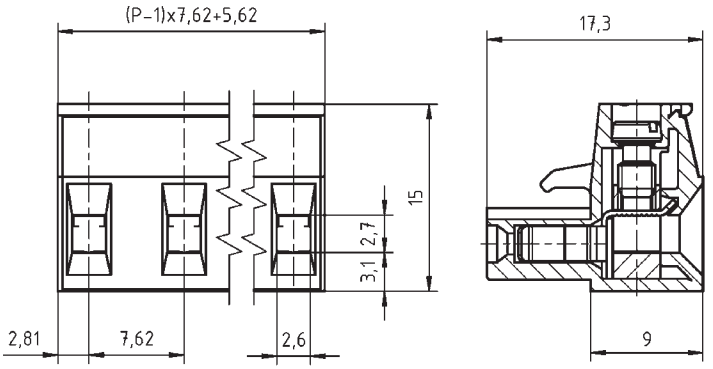

COLOURS[1]

	LIGHT GREY, RAL 7035		GREEN, RAL 6018
	LIGHT GREEN, similar RAL 6018		

COUNTERPARTS (SPACING 7.62 MM

Pin Strip

STLZ960

ORDER DATA (SPACING 7.62 MM)

Poles	Width (mm)	Article Designation	Article Number	PU
2	13.24	AKZ960/2-7.62-GREEN-HC	50960020029E	100
3	20.86	AKZ960/3-7.62-GREEN-HC	50960030029E	100
4	28.48	AKZ960/4-7.62-GREEN-HC	50960040029E	100
5	36.10	AKZ960/5-7.62-GREEN-HC	50960050029E	100
6	43.72	AKZ960/6-7.62-GREEN-HC	50960060029D	50
7	51.34	AKZ960/7-7.62-GREEN-HC	50960070029D	50
8	58.96	AKZ960/8-7.62-GREEN-HC	50960080029D	50
9	66.58	AKZ960/9-7.62-GREEN-HC	50960090029D	50
10	74.20	AKZ960/10-7.62-GREEN-HC	50960100029D	50
11	81.82	AKZ960/11-7.62-GREEN-HC	50960110029D	50
12	89.44	AKZ960/12-7.62-GREEN-HC	50960120029D	50
13	97.06	AKZ960/13-7.62-GREEN-HC	50960130029D	50
14	104.68	AKZ960/14-7.62-GREEN-HC	50960140029D	50
15	112.30	AKZ960/15-7.62-GREEN-HC	50960150029D	50
16	119.92	AKZ960/16-7.62-GREEN-HC	50960160029D	50

ACCESSORIES

	Description	Article Number
	Bridge, 2-pole, insulated, BRI/2-7.5/7.62-L8.2-LIGHT GREY	50000000017
	Coding Star CS1-5.0/5.08-RED	50000000021
	Series AK(Z)960 with Separating Element	on request
	Series AKZ960 with pull relief	on request

RATINGS

Usegroup	B	C	D		
Rated Voltage	300 V	150 V	300 V	400 V	
Rated Current	16 A	16 A	10 A	16 A	
Overvoltage Category				III	
Rated Wire Size				min	max
solid	AWG 22-12	AWG 22-12	AWG 22-12	0.5 mm² (5 A)	2.5 mm² (16 A)
stranded	AWG 22-12	AWG 22-12	AWG 22-12	0.5 mm² (5 A)	2.5 mm² (16 A)
Torque (in.lbs)	4.43	4.43	4.43	4.43	
Screw Size	M3	M3	M3	M3	
Test Voltage	1.6 kV	1.3 kV	1.6 kV	4.0 kV	
Pollution Degree				3	

[1]Colours according to RAL, there may be variations on colour due to production conditions. Special colours on request.

L'IMPULSION
Retrouvez nous sur
www.limpulsion.fr

AKZ965/..F-7.62-GREEN

Spacing 7.62 mm



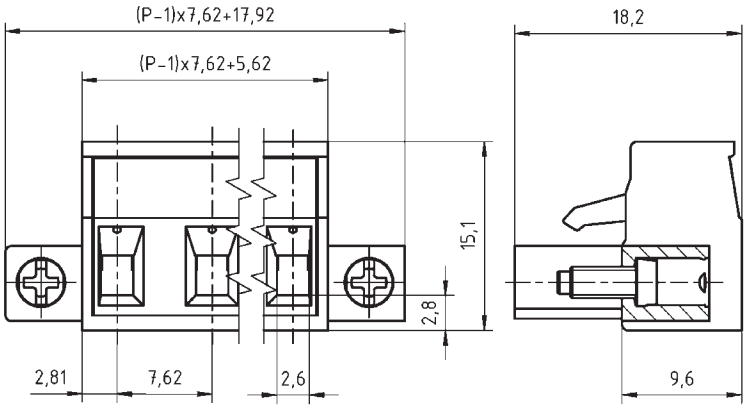

WIRE SIZES	
solid min	0.08 mm²
solid max	4.0 mm²
stranded min	0.08 mm²
stranded max	4.0 mm²
stranded with ferrule min	0.25 mm²
stranded with ferrule max	2.5 mm²
DIMENSIONS	
Stripped Length	7.0 mm
PCB Hole Diameter	-
MATERIALS	
Clamp	Brass
Screw	Steel
Contact Spring	Bronze
INSULATING MATERIAL	
Material	PA 6.6
Flammability Class	UL 94 V-0
TEMPERATURES	
Operating Temperature (without mech. load)	-40 °C - 105 °C
WAVE SOLDERING PROCESS	
Soldering Temperature, recommended	-
Peak Soldering Time, recommended	-
REFLOW PROCESS	
Soldering Temperature, recommended	-
Peak Soldering Time, recommended	-

COLOURS[1]

GREEN, RAL 6018

LIGHT GREEN, similar RAL 6018

ACCESSORIES

	Description	Article Number
	Bridge, 2-pole, insulated, BRI/2-7.5/7.62-L8.2-LIGHT GREY	50000000017
	Coding Star CS4-5.0/5.08-RED	50000000026
	Series AKZ965 with pull relief	on request

COUNTERPARTS (SPACING 7.62 MM

Pin Strip
STLZ965

ORDER DATA (SPACING 7.62 MM)

Poles	Width (mm)	Article Designation	Article Number	PU
2	25.54	AKZ965/2F-7.62-GREEN	50965022021E	100
3	33.16	AKZ965/3F-7.62-GREEN	50965032021E	100
4	40.78	AKZ965/4F-7.62-GREEN	50965042021D	50
5	48.40	AKZ965/5F-7.62-GREEN	50965052021D	50
6	56.02	AKZ965/6F-7.62-GREEN	50965062021D	50
7	63.64	AKZ965/7F-7.62-GREEN	50965072021D	50
8	71.26	AKZ965/8F-7.62-GREEN	50965082021D	50
9	78.88	AKZ965/9F-7.62-GREEN	50965092021D	50
10	86.50	AKZ965/10F-7.62-GREEN	50965102021D	50
11	94.12	AKZ965/11F-7.62-GREEN	50965112021D	50
12	101.74	AKZ965/12F-7.62-GREEN	50965122021D	50
13	109.36	AKZ965/13F-7.62-GREEN	50965132021D	50
14	116.98	AKZ965/14F-7.62-GREEN	50965142021D	50
15	124.60	AKZ965/15F-7.62-GREEN	50965152021D	50
16	132.22	AKZ965/16F-7.62-GREEN	50965162021D	50

RATINGS

	c UL us			VDE	
Usegroup	B	C	D		
Rated Voltage	300 V	-	300 V	250 V	
Rated Current	10 A	-	10 A	12 A	
Overvoltage Category				III	
Rated Wire Size				min	max
solid	AWG 28-12	-	AWG 28-12	0.5 mm² (5 A)	2.5 mm² (12 A)
stranded	AWG 28-12	-	AWG 28-12	0.5 mm² (5 A)	2.5 mm² (12 A)
Torque (in.lbs)	4.43	-	4.43	4.43	
Screw Size	M3	-	M3	M3	
Test Voltage	1.6 kV	-	1.6 kV	6.0 kV	
Pollution Degree				3	

[1]Colours according to RAL, there may be variations on colour due to production conditions. Special colours on request.

Spacing 5.0 mm / Spacing 5.08 mm
17- to 24-poles on request

AK1200/..-5.0-GREEN
AKZ1200/..-5.08-GREEN

WIRE SIZES	
solid min	0.2 mm²
solid max	4.0 mm²
stranded min	0.2 mm²
stranded max	2.5 mm²
stranded with ferrule min	0.25 mm²
stranded with ferrule max	2.5 mm²
DIMENSIONS	
Stripped Length	10.0 mm
PCB Hole Diameter	-
MATERIALS	
Screw	Steel
Contact Spring	Bronze
Clamp Cage	Steel
Excenter	Steel
INSULATING MATERIAL	
Material	PA 6.6
Flammability Class	UL 94 V-0
TEMPERATURES	
Operating Temperature (without mech. load)	-40 °C - 105 °C
WAVE SOLDERING PROCESS	
Soldering Temperature, recommended	-
Peak Soldering Time, recommended	-
REFLOW PROCESS	
Soldering Temperature, recommended	-
Peak Soldering Time, recommended	-



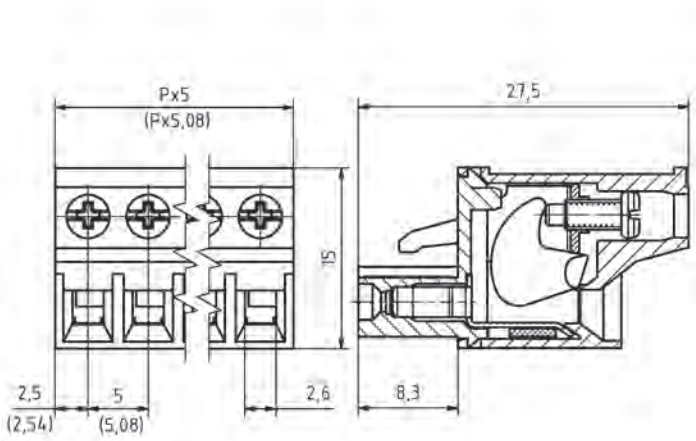

COLOURS[1]

GREEN, RAL 6018 — LIGHT GREEN, similar RAL 6018

COUNTERPARTS (SPACING 5.0 MM)

Pin Strip

STL950 STL950-HT STL950-G-HT STL955 STL975

COUNTERPARTS (SPACING 5.08 MM)

Pin Strip / PCB Terminal Block

STLZ950 STLZ950-HT STLZ950-G-HT STLZ970 STLZ990 AKZ950 AKZS950

ACCESSORIES

	Description	Article Number
	Coding Star CS4-5.0/5.08-RED	50000000026
	Series AKZ1200 with pull relief	on request

ORDER DATA (SPACING 5.0 MM)

Poles	Width (mm)	Article Designation	Article Number	PU
2	10.08	AK1200/2-5.0-GREEN	51200020001D	50
3	15.08	AK1200/3-5.0-GREEN	51200030001D	50
4	20.08	AK1200/4-5.0-GREEN	51200040001D	50
5	25.08	AK1200/5-5.0-GREEN	51200050001D	50
6	30.08	AK1200/6-5.0-GREEN	51200060001D	50
7	35.08	AK1200/7-5.0-GREEN	51200070001D	50
8	40.08	AK1200/8-5.0-GREEN	51200080001D	50
9	45.08	AK1200/9-5.0-GREEN	51200090001D	50
...	...	...	...	...
16	80.08	AK1200/16-5.0-GREEN	51200160001D	50

ORDER DATA (SPACING 5.08 MM)

Poles	Width (mm)	Article Designation	Article Number	PU
2	10.16	AKZ1200/2-5.08-GREEN	51200020021D	50
3	15.24	AKZ1200/3-5.08-GREEN	51200030021D	50
4	20.32	AKZ1200/4-5.08-GREEN	51200040021D	50
5	25.40	AKZ1200/5-5.08-GREEN	51200050021D	50
6	30.48	AKZ1200/6-5.08-GREEN	51200060021D	50
7	35.56	AKZ1200/7-5.08-GREEN	51200070021D	50
8	40.64	AKZ1200/8-5.08-GREEN	51200080021D	50
9	45.72	AKZ1200/9-5.08-GREEN	51200090021D	50
...	...	...	...	...
16	81.28	AKZ1200/16-5.08-GREEN	51200160021D	50

RATINGS

	c UL us			VDE	
Usegroup	B	C	D		
Rated Voltage	300 V	150 V	300 V	250 V	
Rated Current	15 A	15 A	10 A	12 A	
Overvoltage Category				III	
Rated Wire Size				min	max
solid	AWG 22-12	AWG 22-12	AWG 22-12	0.5 mm² (5 A)	2.5 mm² (12 A)
stranded	AWG 22-12	AWG 22-12	AWG 22-12	0.5 mm² (5 A)	2.5 mm² (12 A)
Torque (in.lbs)	4.43	4.43	4.43	4.43	
Screw Size	M2.5	M2.5	M2.5	M2.5	
Test Voltage	1.6 kV	1.3 kV	1.6 kV	4.0 kV	
Pollution Degree				3	

[1]Colours according to RAL, there may be variations on colour due to production conditions. Special colours on request.

L'IMPULSION
Retrouvez nous sur
www.limpulsion.fr

AK1200/..F-5.0-GREEN
AKZ1200/..F-5.08-GREEN

Spacing 5.0 mm / Spacing 5.08 mm
17- to 24-poles on request



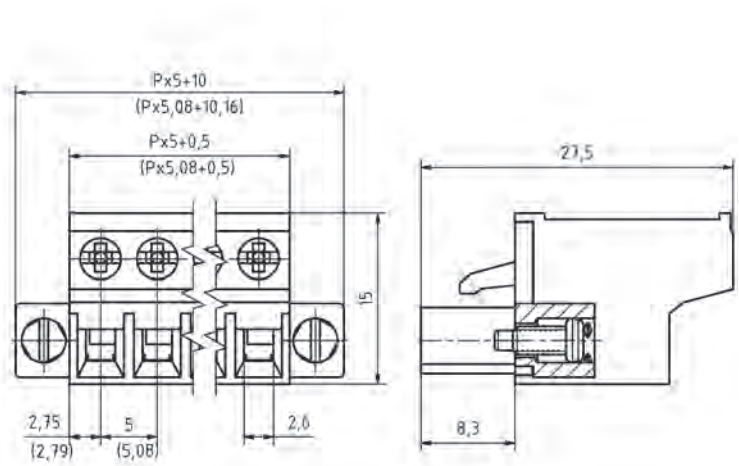

WIRE SIZES	
solid min	0.2 mm²
solid max	4.0 mm²
stranded min	0.2 mm²
stranded max	2.5 mm²
stranded with ferrule min	0.25 mm²
stranded with ferrule max	2.5 mm²
DIMENSIONS	
Stripped Length	10.0 mm
PCB Hole Diameter	-
MATERIALS	
Screw	Steel
Contact Spring	Bronze
Clamp Cage	Steel
Excenter	Steel
INSULATING MATERIAL	
Material	PA 6.6
Flammability Class	UL 94 V-0
TEMPERATURES	
Operating Temperature (without mech. load)	-40 °C - 105 °C
WAVE SOLDERING PROCESS	
Soldering Temperature, recommended	-
Peak Soldering Time, recommended	-
REFLOW PROCESS	
Soldering Temperature, recommended	-
Peak Soldering Time, recommended	-

COLOURS[1]

GREEN, RAL 6018 — LIGHT GREEN, similar RAL 6018

ACCESSORIES

	Description	Article Number
	Coding Star CS4-5.0/5.08-RED	50000000026
	Series AKZ1200 with pull relief	on request

RATINGS

	cULus			VDE	
Usegroup	B	C	D		
Rated Voltage	300 V	150 V	300 V	250 V	
Rated Current	15 A	15 A	10 A	12 A	
Overvoltage Category				III	
Rated Wire Size				min	max
solid	AWG 22-12	AWG 22-12	AWG 22-12	0.2 mm² (4 A)	2.5 mm² (12 A)
stranded	AWG 22-12	AWG 22-12	AWG 22-12	0.2 mm² (4 A)	2.5 mm² (12 A)
Torque (in.lbs)	4.43	4.43	4.43	4.43	
Screw Size	M2.5	M2.5	M2.5	M2.5	
Test Voltage	1.6 kV	1.3 kV	1.6 kV	4.0 kV	
Pollution Degree				3	

COUNTERPARTS (SPACING 5.0 MM)

Pin Strip

STL950 STL950-HT

COUNTERPARTS (SPACING 5.08 MM)

Pin Strip / PCB Terminal Block

STLZ950 STLZ950-HT STLZ970 STLZ990 AKZ950 AKZS950

ORDER DATA (SPACING 5.0 MM)

Poles	Width (mm)	Article Designation	Article Number	PU
2	10.08	AK1200/2F-5.0-GREEN	51200022001D	50
3	15.08	AK1200/3F-5.0-GREEN	51200032001D	50
4	20.08	AK1200/4F-5.0-GREEN	51200042001D	50
5	25.08	AK1200/5F-5.0-GREEN	51200052001D	50
6	30.08	AK1200/6F-5.0-GREEN	51200062001D	50
7	35.08	AK1200/7F-5.0-GREEN	51200072001D	50
8	40.08	AK1200/8F-5.0-GREEN	51200082001D	50
9	45.08	AK1200/9F-5.0-GREEN	51200092001D	50
...	...	...	...	...
16	80.08	AK1200/16F-5.0-GREEN	51200162001D	50

ORDER DATA (SPACING 5.08 MM)

Poles	Width (mm)	Article Designation	Article Number	PU
2	10.16	AKZ1200/2F-5.08-GREEN	51200022021D	50
3	15.24	AKZ1200/3F-5.08-GREEN	51200032021D	50
4	20.32	AKZ1200/4F-5.08-GREEN	51200042021D	50
5	25.40	AKZ1200/5F-5.08-GREEN	51200052021D	50
6	30.48	AKZ1200/6F-5.08-GREEN	51200062021D	50
7	35.56	AKZ1200/7F-5.08-GREEN	51200072021D	50
8	40.64	AKZ1200/8F-5.08-GREEN	51200082021D	50
9	45.72	AKZ1200/9F-5.08-GREEN	51200092021D	50
...	...	...	...	...
16	81.28	AKZ1200/16F-5.08-GREEN	51200162021D	50

[1]Colours according to RAL, there may be variations on colour due to production conditions. Special colours on request.

Spacing 3.5 mm

AK4350/..G-3.5-GREEN

WIRE SIZES	
solid min	0.34 mm²
solid max	0.5 mm²
stranded min	-
stranded max	-
stranded with ferrule min	-
stranded with ferrule max	-
DIMENSIONS	
Stripped Length	8.5 mm
PCB Hole Diameter	-
MATERIALS	
Contact Spring	Copper Alloy
Clamp Spring	Stainless Steel
INSULATING MATERIAL	
Material	PA 6.6
Flammability Class	UL 94 V-0
TEMPERATURES	
Operating Temperature (without mech. load)	-40 °C - 105 °C
WAVE SOLDERING PROCESS	
Soldering Temperature, recommended	-
Peak Soldering Time, recommended	-
REFLOW PROCESS	
Soldering Temperature, recommended	-
Peak Soldering Time, recommended	-



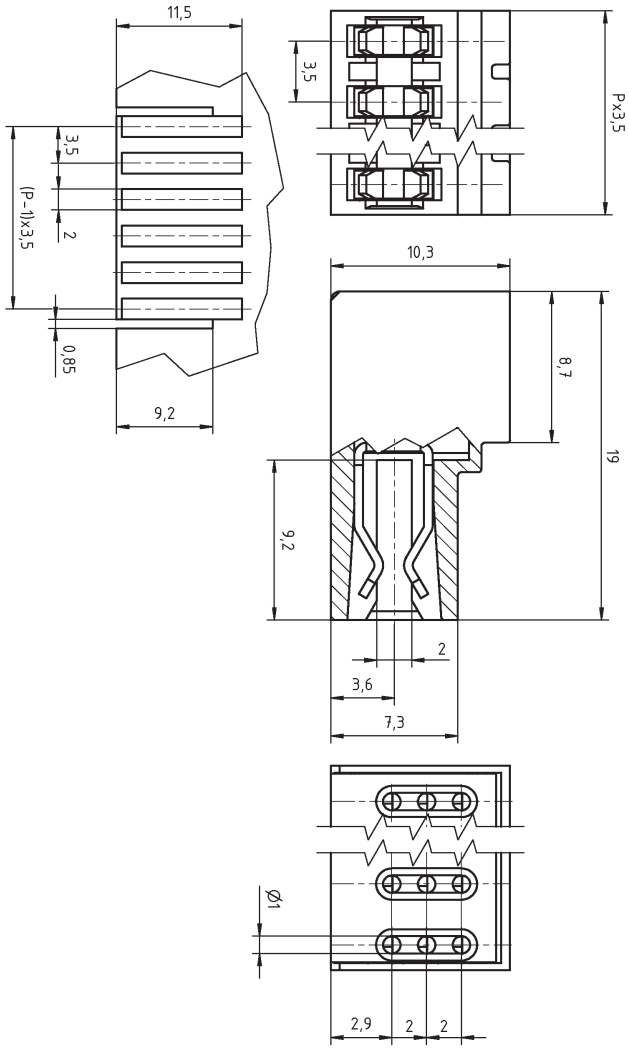

COLOURS[1]
GREEN, RAL 6018

ORDER DATA (SPACING 3.5 MM)				
Poles	Width (mm)	Article Designation	Article Number	PU
2	7.00	AK4350/2G-3.5-GREEN	54350020001F	200
3	10.50	AK4350/3G-3.5-GREEN	54350030001F	200
4	14.00	AK4350/4G-3.5-GREEN	54350040001E	100
5	17.50	AK4350/5G-3.5-GREEN	54350050001E	100
6	21.00	AK4350/6G-3.5-GREEN	54350060001D	50
7	24.50	AK4350/7G-3.5-GREEN	54350070001D	50
8	28.00	AK4350/8G-3.5-GREEN	54350080001D	50
9	31.50	AK4350/9G-3.5-GREEN	54350090001D	50
10	35.00	AK4350/10G-3.5-GREEN	54350100001D	50
11	38.50	AK4350/11G-3.5-GREEN	54350110001D	50
12	42.00	AK4350/12G-3.5-GREEN	54350120001D	50

RATINGS	c UL us			*	
Usegroup	B	C	D		
Rated Voltage	150 V	-	300 V	160 V	
Rated Current	5 A	-	5 A	6 A	
Overvoltage Category				III	
Rated Wire Size				min	max
solid	AWG 22-20	-	AWG 22-20	-	0.5 mm² (6 A)
stranded	-	-	-	-	-
Test Voltage	1.3 kV	-	1.6 kV	2.5 kV	
Pollution Degree				3	

* Data similar to EN 61984

[1]Colours according to RAL, there may be variations on colour due to production conditions. Special colours on request.

L'IMPULSION
Retrouvez nous sur
www.limpulsion.fr

NEW

AK4541/..KD-3.5-BASALTGREY

Spacing 3.5 mm



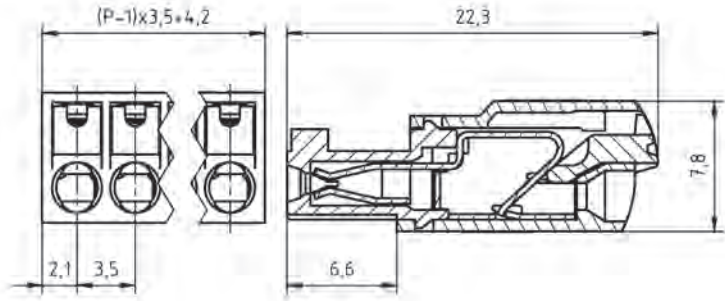

WIRE SIZES	
solid min	0.2 mm²
solid max	1.5 mm²
stranded min	0.2 mm²
stranded max	1.5 mm²
stranded with ferrule min	0.25 mm²
stranded with ferrule max	1.5 mm²
DIMENSIONS	
Stripped Length	10.0 mm
PCB Hole Diameter	-
MATERIALS	
Contact Spring	tin plated
Clamp Spring	Stainless Steel
INSULATING MATERIAL	
Material	PA 6.6
Flammability Class	UL 94 V-0
TEMPERATURES	
Operating Temperature (without mech. load)	-40 °C - 105 °C
WAVE SOLDERING PROCESS	
Soldering Temperature, recommended	-
Peak Soldering Time, recommended	-
REFLOW PROCESS	
Soldering Temperature, recommended	-
Peak Soldering Time, recommended	-

COLOURS[1]

	BASALT GREY, RAL 7012		GREEN, RAL 6018
	LIGHT GREEN, similar RAL 6018		

ACCESSORIES

	Description	Article Number
	Series AK4541 with pull relief	on request

COUNTERPARTS (SPACING 3.5 MM)

Pin Strip	
STL1541	STL1550

RATINGS

Usegroup	B	C	D
Rated Voltage	150 V	50 V	150 V
Rated Current	8 A	8 A	8 A
Rated Wire Size			
solid	AWG 24-16	AWG 24-16	AWG 24-16
stranded	AWG 24-16	AWG 24-16	AWG 24-16
Test Voltage	1.3 kV	1.1 kV	1.3 kV

*Approval Pending

RATINGS

Overvoltage Category	II		III		III	
Pollution Degree	2		2		3	
Rated Voltage	320 V		160 V		160 V	
Rated Current	8 A		8 A		8 A	
Rated Wire Size	min	max	min	max	min	max
solid (mm²)	0.2	1.5	0.2	1.5	0.2	1.5
stranded (mm²)	0.2	1.5	0.2	1.5	0.2	1.5
Test Voltage	2.5 kV		2.5 kV		2.5 kV	

*Approval Pending

ORDER DATA (SPACING 3.5 MM)

Poles	Width (mm)	Article Designation	Article Number	PU
2	7.70	AK4541/2KD-3.5-BASALTGREY	54541020401G	250
3	11.20	AK4541/3KD-3.5-BASALTGREY	54541030401F	200
4	14.70	AK4541/4KD-3.5-BASALTGREY	54541040401F	200
5	18.20	AK4541/5KD-3.5-BASALTGREY	54541050401E	100
6	21.70	AK4541/6KD-3.5-BASALTGREY	54541060401E	100
7	25.20	AK4541/7KD-3.5-BASALTGREY	54541070401D	50
8	28.70	AK4541/8KD-3.5-BASALTGREY	54541080401D	50
9	32.20	AK4541/9KD-3.5-BASALTGREY	54541090401D	50
10	35.70	AK4541/10KD-3.5-BASALTGREY	54541100401D	50
11	39.20	AK4541/11KD-3.5-BASALTGREY	54541110401D	50
12	42.70	AK4541/12KD-3.5-BASALTGREY	54541120401D	50
13	46.20	AK4541/13KD-3.5-BASALTGREY	54541130401D	50
14	49.70	AK4541/14KD-3.5-BASALTGREY	54541140401D	50
15	53.20	AK4541/15KD-3.5-BASALTGREY	54541150401D	50
16	56.70	AK4541/16KD-3.5-BASALTGREY	54541160401D	50
17	60.20	AK4541/17KD-3.5-BASALTGREY	54541170401D	50
18	63.70	AK4541/18KD-3.5-BASALTGREY	54541180401D	50
19	67.20	AK4541/19KD-3.5-BASALTGREY	54541190401D	50
20	70.70	AK4541/20KD-3.5-BASALTGREY	54541200401D	50

[1]Colours according to RAL, there may be variations on colour due to production conditions. Special colours on request.

Spacing 3.5 mm

AK4541/..FRKD-3.5-BASALTGREY

NEW

WIRE SIZES	
solid min	0.2 mm²
solid max	1.5 mm²
stranded min	0.2 mm²
stranded max	1.5 mm²
stranded with ferrule min	0.25 mm²
stranded with ferrule max	1.5 mm²
DIMENSIONS	
Stripped Length	10.0 mm
PCB Hole Diameter	-
MATERIALS	
Contact Spring	tin plated
Clamp Spring	Stainless Steel
INSULATING MATERIAL	
Material	PA 6.6
Flammability Class	UL 94 V-0
TEMPERATURES	
Operating Temperature (without mech. load)	-40 °C - 105 °C
WAVE SOLDERING PROCESS	
Soldering Temperature, recommended	-
Peak Soldering Time, recommended	-
REFLOW PROCESS	
Soldering Temperature, recommended	-
Peak Soldering Time, recommended	-



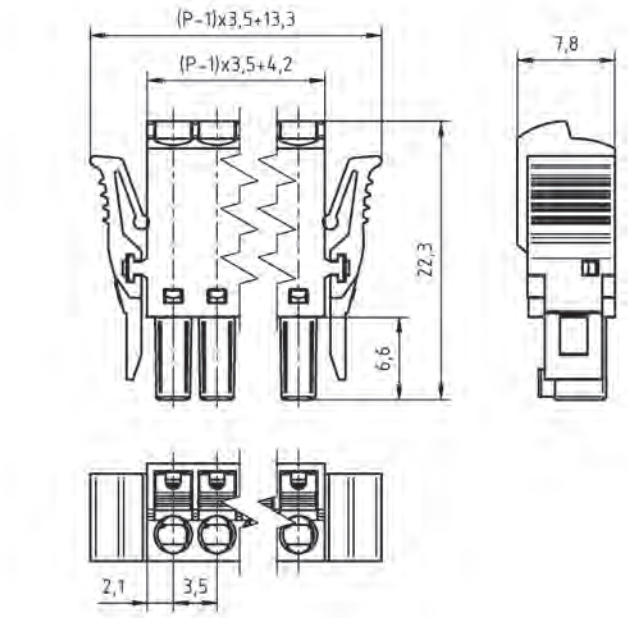

COLOURS1

	BASALT GREY, RAL 7012		GREEN, RAL 6018
	LIGHT GREEN, similar RAL 6018		

COUNTERPARTS (SPACING 3.5 MM)

Pin Strip
STL1541

ACCESSORIES

	Description	Article Number
	Series AK4541 with pull relief	on request

ORDER DATA (SPACING 3.5 MM)

Poles	Width (mm)	Article Designation	Article Number	PU
2	16.80	AK4541/2FRKD-3.5-BASALTGREY	54541026401G	250
3	20.30	AK4541/3FRKD-3.5-BASALTGREY	54541036401F	200
4	23.80	AK4541/4FRKD-3.5-BASALTGREY	54541046401F	200
5	27.30	AK4541/5FRKD-3.5-BASALTGREY	54541056401E	100
6	30.80	AK4541/6FRKD-3.5-BASALTGREY	54541066401E	100
7	34.30	AK4541/7FRKD-3.5-BASALTGREY	54541076401D	50
8	37.80	AK4541/8FRKD-3.5-BASALTGREY	54541086401D	50
9	41.30	AK4541/9FRKD-3.5-BASALTGREY	54541096401D	50
10	44.80	AK4541/10FRKD-3.5-BASALTGREY	54541106401D	50
11	48.30	AK4541/11FRKD-3.5-BASALTGREY	54541116401D	50
12	51.80	AK4541/12FRKD-3.5-BASALTGREY	54541126401D	50
13	55.30	AK4541/13FRKD-3.5-BASALTGREY	54541136401D	50
14	58.80	AK4541/14FRKD-3.5-BASALTGREY	54541146401D	50
15	62.30	AK4541/15FRKD-3.5-BASALTGREY	54541156401D	50
16	65.80	AK4541/16FRKD-3.5-BASALTGREY	54541166401D	50
17	69.30	AK4541/17FRKD-3.5-BASALTGREY	54541176401D	50
18	72.80	AK4541/18FRKD-3.5-BASALTGREY	54541186401D	50
19	76.30	AK4541/19FRKD-3.5-BASALTGREY	54541196401D	50
20	79.80	AK4541/20FRKD-3.5-BASALTGREY	54541206401D	50

RATINGS			
Usegroup	B	C	D
Rated Voltage	150 V	50 V	150 V
Rated Current	8 A	8 A	8 A
Rated Wire Size			
solid	AWG 24-16	AWG 24-16	AWG 24-16
stranded	AWG 24-16	AWG 24-16	AWG 24-16
Test Voltage	1.3 kV	1.1 kV	1.3 kV

*Approval Pending

RATINGS						
Overvoltage Category	II		III		III	
Pollution Degree	2		2		3	
Rated Voltage	320 V		160 V		160 V	
Rated Current	8 A		8 A		8 A	
Rated Wire Size	min	max	min	max	min	max
solid (mm²)	0.2	1.5	0.2	1.5	0.2	1.5
stranded (mm²)	0.2	1.5	0.2	1.5	0.2	1.5
Test Voltage	2.5 kV		2.5 kV		2.5 kV	

*Approval Pending

[1]Colours according to RAL, there may be variations on colour due to production conditions. Special colours on request.

L'IMPULSION
Retrouvez nous sur
www.limpulsion.fr

AK4551/..KD-3.5-BASALTGREY
AKZ4551/..KD-3.81-BASALTGREY

Spacing 3.5 mm / Spacing 3.81 mm



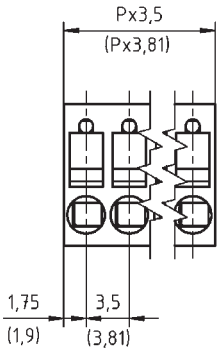

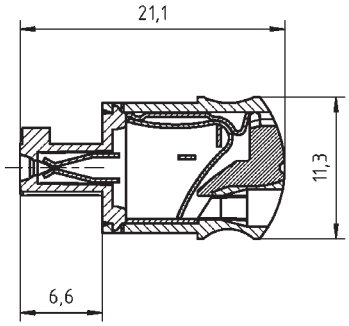

WIRE SIZES	
solid min	0.14 mm²
solid max	2.5 mm²
stranded min	0.14 mm²
stranded max	1.5 mm²
stranded with ferrule min	0.25 mm²
stranded with ferrule max	1.0 mm²
DIMENSIONS	
Stripped Length	11.0 mm
PCB Hole Diameter	-
MATERIALS	
Contact Spring	Copper Alloy
Clamp Spring	Stainless Steel
INSULATING MATERIAL	
Material	PA 6.6
Flammability Class	UL 94 V-0
TEMPERATURES	
Operating Temperature (without mech. load)	-40 °C - 105 °C
WAVE SOLDERING PROCESS	
Soldering Temperature, recommended	-
Peak Soldering Time, recommended	-
REFLOW PROCESS	
Soldering Temperature, recommended	-
Peak Soldering Time, recommended	-

COLOURS[1]

BASALT GREY, RAL 7012	GREEN, RAL 6018
LIGHT GREEN, similar RAL 6018	

ACCESSORIES

	Description	Article Number
	Series AK(Z)4551 with pull relief	on request

RATINGS

	cULus			VDE	
Usegroup	B	C	D		
Rated Voltage	300 V	-	300 V	160 V	
Rated Current	10 A	-	10 A	10 A	
Overvoltage Category				III	
Rated Wire Size				min	max
solid	AWG 26-16	-	AWG 26-16	0.14 mm² (3 A)	2.5 mm² (10 A)
stranded	AWG 26-16	-	AWG 26-16	0.14 mm² (3 A)	1.5 mm² (10 A)
Test Voltage	1.6 kV	-	1.6 kV	2.5 kV	
Pollution Degree				3	

COUNTERPARTS (SPACING 3.5 MM)

Pin Strip

STL1550

COUNTERPARTS (SPACING 3.81 MM)

Pin Strip

STLZ1550 STLZ1570 STLZ1590

ORDER DATA (SPACING 3.5 MM)

Poles	Width (mm)	Article Designation	Article Number	PU
2	7.00	AK4551/2KD-3.5-BASALTGREY	54551020401F	200
3	10.50	AK4551/3KD-3.5-BASALTGREY	54551030401F	200
4	14.00	AK4551/4KD-3.5-BASALTGREY	54551040401F	200
5	17.50	AK4551/5KD-3.5-BASALTGREY	54551050401F	200
6	21.00	AK4551/6KD-3.5-BASALTGREY	54551060401E	100
7	24.50	AK4551/7KD-3.5-BASALTGREY	54551070401E	100
8	28.00	AK4551/8KD-3.5-BASALTGREY	54551080401D	50
9	31.50	AK4551/9KD-3.5-BASALTGREY	54551090401D	50
...	...	...	...	...
20	70.00	AK4551/20KD-3.5-BASALTGREY	54551200401D	50

ORDER DATA (SPACING 3.81 MM)

Poles	Width (mm)	Article Designation	Article Number	PU
2	7.62	AKZ4551/2KD-3.81-BASALTGREY	54551020421F	200
3	11.43	AKZ4551/3KD-3.81-BASALTGREY	54551030421F	200
4	15.24	AKZ4551/4KD-3.81-BASALTGREY	54551040421F	200
5	19.05	AKZ4551/5KD-3.81-BASALTGREY	54551050421F	200
6	22.86	AKZ4551/6KD-3.81-BASALTGREY	54551060421E	100
7	26.67	AKZ4551/7KD-3.81-BASALTGREY	54551070421E	100
8	30.48	AKZ4551/8KD-3.81-BASALTGREY	54551080421D	50
9	34.29	AKZ4551/9KD-3.81-BASALTGREY	54551090421D	50
...	...	...	...	...
20	76.20	AKZ4551/20KD-3.81-BASALTGREY	54551200421D	50

[1]Colours according to RAL, there may be variations on colour due to production conditions. Special colours on request.

Spacing 3.5 mm /
3.81 mm

AK4551/..FKD-3.5-BASALTGREY
AKZ4551/..FKD-3.81-BASALTGREY

WIRE SIZES	
solid min	0.14 mm²
solid max	2.5 mm²
stranded min	0.14 mm²
stranded max	1.5 mm²
stranded with ferrule min	0.25 mm²
stranded with ferrule max	1.0 mm²
DIMENSIONS	
Stripped Length	11.0 mm
PCB Hole Diameter	-
MATERIALS	
Screw, Flange	Steel
Contact Spring	Copper Alloy
Clamp Spring	Stainless Steel
INSULATING MATERIAL	
Material	PA 6.6
Flammability Class	UL 94 V-0
TEMPERATURES	
Operating Temperature (without mech. load)	-40 °C - 105 °C
WAVE SOLDERING PROCESS	
Soldering Temperature, recommended	-
Peak Soldering Time, recommended	-
REFLOW PROCESS	
Soldering Temperature, recommended	-
Peak Soldering Time, recommended	-



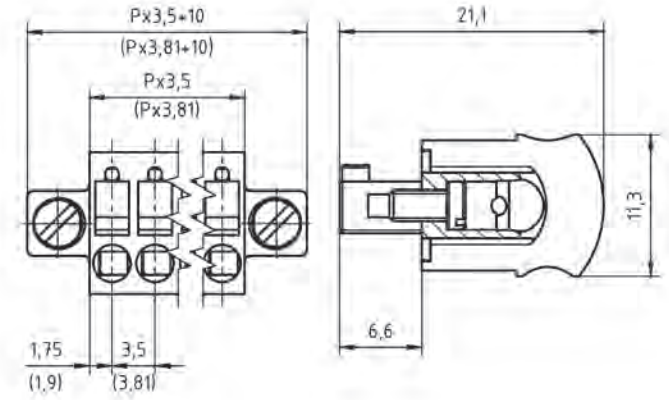

COLOURS[1]

	BASALT GREY, RAL 7012		GREEN, RAL 6018
	LIGHT GREEN, similar RAL 6018		

COUNTERPARTS (SPACING 3.5 MM)

Pin Strip

STL1550

COUNTERPARTS (SPACING 3.81 MM)

Pin Strip

STLZ1550 STLZ1570

ACCESSORIES

	Description	Article Number
	Series AK(Z)4551 with pull relief	on request

ORDER DATA (SPACING 3.5 MM)

Poles	Width (mm)	Article Designation	Article Number	PU
2	17.00	AK4551/2FKD-3.5-BASALTGREY	54551022401F	200
3	20.50	AK4551/3FKD-3.5-BASALTGREY	54551032401F	200
4	24.00	AK4551/4FKD-3.5-BASALTGREY	54551042401F	200
5	27.50	AK4551/5FKD-3.5-BASALTGREY	54551052401F	200
6	31.00	AK4551/6FKD-3.5-BASALTGREY	54551062401E	100
7	34.50	AK4551/7FKD-3.5-BASALTGREY	54551072401E	100
8	38.00	AK4551/8FKD-3.5-BASALTGREY	54551082401D	50
9	41.50	AK4551/9FKD-3.5-BASALTGREY	54551092401D	50
...	...	...	...	...
20	80.00	AK4551/20FKD-3.5-BASALTGREY	54551202401D	50

ORDER DATA (SPACING 3.81 MM)

Poles	Width (mm)	Article Designation	Article Number	PU
2	17.62	AKZ4551/2FKD-3.81-BASALTGREY	54551022421F	200
3	21.43	AKZ4551/3FKD-3.81-BASALTGREY	54551032421F	200
4	25.24	AKZ4551/4FKD-3.81-BASALTGREY	54551042421F	200
5	29.05	AKZ4551/5FKD-3.81-BASALTGREY	54551052421F	200
6	32.86	AKZ4551/6FKD-3.81-BASALTGREY	54551062421E	100
7	36.67	AKZ4551/7FKD-3.81-BASALTGREY	54551072421E	100
8	40.48	AKZ4551/8FKD-3.81-BASALTGREY	54551082421D	50
9	44.29	AKZ4551/9FKD-3.81-BASALTGREY	54551092421D	50
...	...	...	...	...
20	86.20	AKZ4551/20FKD-3.81-BASALTGREY	54551202421D	50

RATINGS

	cULus			VDE	
Usegroup	B	C	D		
Rated Voltage	300 V	-	300 V	160 V	
Rated Current	10 A	-	10 A	10 A	
Overvoltage Category				III	
Rated Wire Size				min	max
solid	AWG 26-16	-	AWG 26-16	0.14 mm² (3 A)	2.5 mm² (10 A)
stranded	AWG 26-16	-	AWG 26-16	0.14 mm² (3 A)	1.5 mm² (10 A)
Test Voltage	1.6 kV	-	1.6 kV	2.5 kV	
Pollution Degree				3	

[1]Colours according to RAL, there may be variations on colour due to production conditions. Special colours on request.

L'IMPULSION Retrouvez nous sur www.limpulsion.fr

AK4561/..KD-3.5-BASALTGREY
AKZ4561/..KD-3.81-BASALTGREY

Spacing 3.5 mm / Spacing 3.81 mm



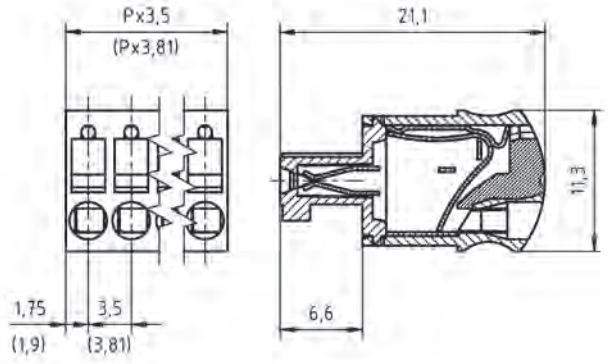

WIRE SIZES	
solid min	0.14 mm²
solid max	2.5 mm²
stranded min	0.14 mm²
stranded max	1.5 mm²
stranded with ferrule min	0.25 mm²
stranded with ferrule max	1.0 mm²
DIMENSIONS	
Stripped Length	11.0 mm
PCB Hole Diameter	-
MATERIALS	
Contact Spring	Copper Alloy
Clamp Spring	Stainless Steel
INSULATING MATERIAL	
Material	PA 6.6
Flammability Class	UL 94 V-0
TEMPERATURES	
Operating Temperature (without mech. load)	-40 °C - 105 °C
WAVE SOLDERING PROCESS	
Soldering Temperature, recommended	-
Peak Soldering Time, recommended	-
REFLOW PROCESS	
Soldering Temperature, recommended	-
Peak Soldering Time, recommended	-

COLOURS[1]

BASALT GREY, RAL 7012	GREEN, RAL 6018
LIGHT GREEN, similar RAL 6018	

ACCESSORIES

	Description	Article Number
	Series AK(Z)4561 with pull relief	on request

RATINGS

	cULus			VDE	
Usegroup	B	C	D		
Rated Voltage	300 V	-	300 V	160 V	
Rated Current	10 A	-	10 A	10 A	
Overvoltage Category				III	
Rated Wire Size				min	max
solid	AWG 26-16	-	AWG 26-16	0.14 mm² (3 A)	2.5 mm² (10 A)
stranded	AWG 26-16	-	AWG 26-16	0.14 mm² (3 A)	1.5 mm² (10 A)
Test Voltage	1.6 kV	-	1.6 kV	2.5 kV	
Pollution Degree				3	

COUNTERPARTS (SPACING 3.5 MM)

Pin Strip

STL1550

COUNTERPARTS (SPACING 3.81 MM)

Pin Strip / PCB Terminal Block

STLZ1550 STLZ1570 STLZ1590 AKZS950

ORDER DATA (SPACING 3.5 MM)

Poles	Width (mm)	Article Designation	Article Number	PU
2	7.00	AK4561/2KD-3.5-BASALTGREY	54561020401F	200
3	10.50	AK4561/3KD-3.5-BASALTGREY	54561030401F	200
4	14.00	AK4561/4KD-3.5-BASALTGREY	54561040401F	200
5	17.50	AK4561/5KD-3.5-BASALTGREY	54561050401F	200
6	21.00	AK4561/6KD-3.5-BASALTGREY	54561060401E	100
7	24.50	AK4561/7KD-3.5-BASALTGREY	54561070401E	100
8	28.00	AK4561/8KD-3.5-BASALTGREY	54561080401D	50
9	31.50	AK4561/9KD-3.5-BASALTGREY	54561090401D	50
...	...	...	...	...
20	70.00	AK4561/20KD-3.5-BASALTGREY	54561200401D	50

ORDER DATA (SPACING 3.81 MM)

Poles	Width (mm)	Article Designation	Article Number	PU
2	7.62	AKZ4561/2KD-3.81-BASALTGREY	54561020421F	200
3	11.43	AKZ4561/3KD-3.81-BASALTGREY	54561030421F	200
4	15.24	AKZ4561/4KD-3.81-BASALTGREY	54561040421F	200
5	19.05	AKZ4561/5KD-3.81-BASALTGREY	54561050421F	200
6	22.86	AKZ4561/6KD-3.81-BASALTGREY	54561060421E	100
7	26.67	AKZ4561/7KD-3.81-BASALTGREY	54561070421E	100
8	30.48	AKZ4561/8KD-3.81-BASALTGREY	54561080421D	50
9	34.29	AKZ4561/9KD-3.81-BASALTGREY	54561090421D	50
...	...	...	...	...
20	76.20	AKZ4561/20KD-3.81-BASALTGREY	54561200421D	50

[1]Colours according to RAL, there may be variations on colour due to production conditions. Special colours on request.

Spacing 3.5 mm / Spacing 3.81 mm

AK4561/..FKD-3.5-BASALTGREY
AKZ4561/..FKD-3.81-BASALTGREY

WIRE SIZES	
solid min	0.14 mm²
solid max	2.5 mm²
stranded min	0.14 mm²
stranded max	1.5 mm²
stranded with ferrule min	0.25 mm²
stranded with ferrule max	1.0 mm²
DIMENSIONS	
Stripped Length	11.0 mm
PCB Hole Diameter	-
MATERIALS	
Screw, Flange	Steel
Contact Spring	Copper Alloy
Clamp Spring	Stainless Steel
INSULATING MATERIAL	
Material	PA 6.6
Flammability Class	UL 94 V-0
TEMPERATURES	
Operating Temperature (without mech. load)	-40 °C - 105 °C
WAVE SOLDERING PROCESS	
Soldering Temperature, recommended	-
Peak Soldering Time, recommended	-
REFLOW PROCESS	
Soldering Temperature, recommended	-
Peak Soldering Time, recommended	-



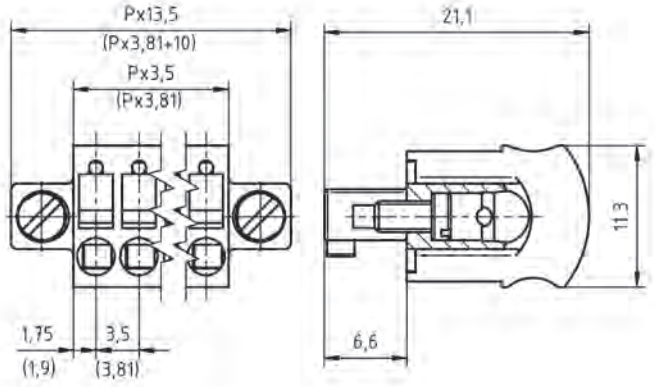

COLOURS[1]

BASALT GREY, RAL 7012
GREEN, RAL 6018
LIGHT GREEN, similar RAL 6018

COUNTERPARTS (SPACING 3.5 MM)

Pin Strip
STL1550

COUNTERPARTS (SPACING 3.81 MM)

Pin Strip
STLZ1550 STLZ1570

ACCESSORIES

	Description	Article Number
	Series AK(Z)4561 with pull relief	on request

ORDER DATA (SPACING 3.5 MM)

Poles	Width (mm)	Article Designation	Article Number	PU
2	17.00	AK4561/2FKD-3.5-BASALTGREY	54561022401F	200
3	20.50	AK4561/3FKD-3.5-BASALTGREY	54561032401F	200
4	24.00	AK4561/4FKD-3.5-BASALTGREY	54561042401F	200
5	27.50	AK4561/5FKD-3.5-BASALTGREY	54561052401F	200
6	31.00	AK4561/6FKD-3.5-BASALTGREY	54561062401E	100
7	34.50	AK4561/7FKD-3.5-BASALTGREY	54561072401E	100
8	38.00	AK4561/8FKD-3.5-BASALTGREY	54561082401D	50
9	41.50	AK4561/9FKD-3.5-BASALTGREY	54561092401D	50
...	...	...	...	...
20	80.00	AK4561/20FKD-3.5-BASALTGREY	54561202401D	50

ORDER DATA (SPACING 3.81 MM)

Poles	Width (mm)	Article Designation	Article Number	PU
2	12.62	AKZ4561/2FKD-3.81-BASALTGREY	54561022421F	200
3	16.43	AKZ4561/3FKD-3.81-BASALTGREY	54561032421F	200
4	20.24	AKZ4561/4FKD-3.81-BASALTGREY	54561042421F	200
5	24.05	AKZ4561/5FKD-3.81-BASALTGREY	54561052421F	200
6	27.86	AKZ4561/6FKD-3.81-BASALTGREY	54561062421E	100
7	31.67	AKZ4561/7FKD-3.81-BASALTGREY	54561072421E	100
8	35.48	AKZ4561/8FKD-3.81-BASALTGREY	54561082421D	50
9	39.29	AKZ4561/9FKD-3.81-BASALTGREY	54561092421D	50
...	...	...	...	...
20	81.20	AKZ4561/20FKD-3.81-BASALTGREY	54561202421D	50

RATINGS

	cULus B	cULus C	cULus D	VDE	
Usegroup					
Rated Voltage	300 V	-	300 V	160 V	
Rated Current	10 A	-	10 A	10 A	
Overvoltage Category				III	
Rated Wire Size				min	max
solid	AWG 26-16	-	AWG 26-16	0.14 mm² (3 A)	2.5 mm² (10 A)
stranded	AWG 26-16	-	AWG 26-16	0.14 mm² (3 A)	1.5 mm² (10 A)
Test Voltage	1.6 kV	-	1.6 kV	2.5 kV	
Pollution Degree				3	

[1]Colours according to RAL, there may be variations on colour due to production conditions. Special colours on request.

L'IMPULSION
Retrouvez nous sur
www.limpulsion.fr

AK4951/..KD-5.0-BASALTGREY
AKZ4951/..KD-5.08-BASALTGREY

Spacing 5.0 mm / Spacing 5.08 mm



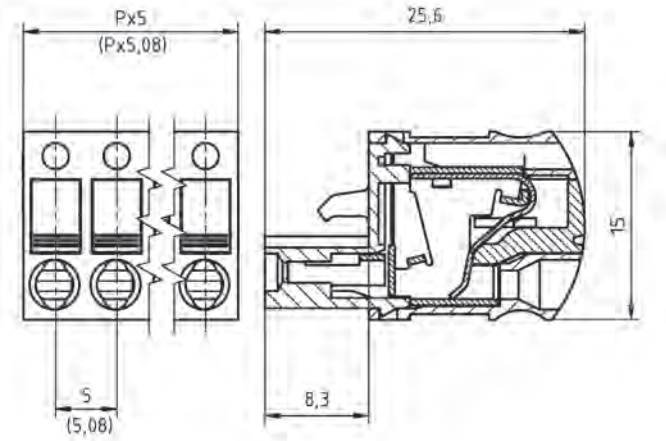

WIRE SIZES	
solid min	0.2 mm²
solid max	2.5 mm²
stranded min	0.2 mm²
stranded max	2.5 mm²
stranded with ferrule min	0.25 mm²
stranded with ferrule max	2.5 mm²
DIMENSIONS	
Stripped Length	12.0 mm
PCB Hole Diameter	-
MATERIALS	
Contact Spring	Copper Alloy
Clamp Spring	Stainless Steel
INSULATING MATERIAL	
Material	PA 6.6
Flammability Class	UL 94 V-0
TEMPERATURES	
Operating Temperature (without mech. load)	-40 °C - 105 °C
WAVE SOLDERING PROCESS	
Soldering Temperature, recommended	-
Peak Soldering Time, recommended	-
REFLOW PROCESS	
Soldering Temperature, recommended	-
Peak Soldering Time, recommended	-

COLOURS[1]

BASALT GREY, RAL 7012		GREEN, RAL 6018	
LIGHT GREEN, similar RAL 6018			

ACCESSORIES

	Description	Article Number
	Coding Star CS1-5.0/5.08-RED	50000000021
	Series AK(Z)4951 with pull relief	on request

RATINGS

Usegroup	B	C	D		
Rated Voltage	300 V	-	300 V	250 V	
Rated Current	10 A	-	10 A	12 A	
Overvoltage Category				III	
Rated Wire Size				min	max
solid	AWG 26-12	-	AWG 26-12	0.2 mm²	2.5 mm² (12 A)
stranded	AWG 26-12	-	AWG 26-12	0.2 mm²	2.5 mm² (12 A)
Test Voltage	1.6 kV	-	1.6 kV	4.0 kV	
Pollution Degree				3	

COUNTERPARTS (SPACING 5.0 MM)

Pin Strip

STL950 STL950-HT STL950-G-HT STL955 STL975

COUNTERPARTS (SPACING 5.08 MM)

Pin Strip / PCB Terminal Block

STLZ950 STLZ950-HT STLZ950-G-HT STLZ970 STLZ990 AKZS950

ORDER DATA (SPACING 5.0 MM)

Poles	Width (mm)	Article Designation	Article Number	PU
2	10.00	AK4951/2KD-5.0-BASALTGREY	54951020401D	50
3	15.00	AK4951/3KD-5.0-BASALTGREY	54951030401D	50
4	20.00	AK4951/4KD-5.0-BASALTGREY	54951040401D	50
5	25.00	AK4951/5KD-5.0-BASALTGREY	54951050401D	50
6	30.00	AK4951/6KD-5.0-BASALTGREY	54951060401D	50
7	35.00	AK4951/7KD-5.0-BASALTGREY	54951070401D	50
8	40.00	AK4951/8KD-5.0-BASALTGREY	54951080401D	50
9	45.00	AK4951/9KD-5.0-BASALTGREY	54951090401D	50
...	...	...	...	...
24	120.00	AK4951/24KD-5.0-BASALTGREY	54951240401D	50

ORDER DATA (SPACING 5.08 MM)

Poles	Width (mm)	Article Designation	Article Number	PU
2	10.16	AKZ4951/2KD-5.08-BASALTGREY	54951020421D	50
3	15.24	AKZ4951/3KD-5.08-BASALTGREY	54951030421D	50
4	20.32	AKZ4951/4KD-5.08-BASALTGREY	54951040421D	50
5	25.40	AKZ4951/5KD-5.08-BASALTGREY	54951050421D	50
6	30.48	AKZ4951/6KD-5.08-BASALTGREY	54951060421D	50
7	35.56	AKZ4951/7KD-5.08-BASALTGREY	54951070421D	50
8	40.64	AKZ4951/8KD-5.08-BASALTGREY	54951080421D	50
9	45.72	AKZ4951/9KD-5.08-BASALTGREY	54951090421D	50
...	...	...	...	...
24	121.92	AKZ4951/24KD-5.08-BASALTGREY	54951240421D	50

[1]Colours according to RAL, there may be variations on colour due to production conditions. Special colours on request.

Spacing 5.0 mm / Spacing 5.08 mm

AK4951/..FKD-5.0-BASALTGREY
AKZ4951/..FKD-5.08-BASALTGREY

WIRE SIZES	
solid min	0.2 mm²
solid max	2.5 mm²
stranded min	0.2 mm²
stranded max	2.5 mm²
stranded with ferrule min	0.25 mm²
stranded with ferrule max	2.5 mm²
DIMENSIONS	
Stripped Length	12.0 mm
PCB Hole Diameter	-
MATERIALS	
Screw, Flange	Steel
Contact Spring	Copper Alloy
Clamp Spring	Stainless Steel
INSULATING MATERIAL	
Material	PA 6.6
Flammability Class	UL 94 V-0
TEMPERATURES	
Operating Temperature (without mech. load)	-40 °C - 105 °C
WAVE SOLDERING PROCESS	
Soldering Temperature, recommended	-
Peak Soldering Time, recommended	-
REFLOW PROCESS	
Soldering Temperature, recommended	-
Peak Soldering Time, recommended	-



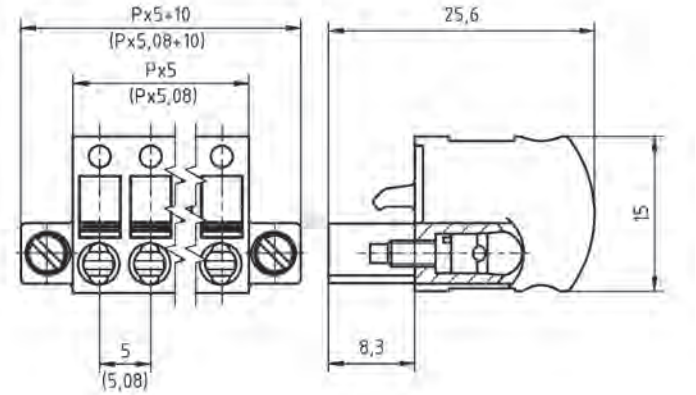

COLOURS[1]

BASALT GREY, RAL 7012
GREEN, RAL 6018
LIGHT GREEN, similar RAL 6018

COUNTERPARTS (SPACING 5.0 MM)

Pin Strip
STL950 STL950-HT

COUNTERPARTS (SPACING 5.08 MM)

Pin Strip / PCB Terminal Block
STLZ950 STLZ950-HT STLZ970 AKZS950

ORDER DATA (SPACING 5.0 MM)

Poles	Width (mm)	Article Designation	Article Number	PU
2	20.00	AK4951/2FKD-5.0-BASALTGREY	54951022401D	50
3	25.00	AK4951/3FKD-5.0-BASALTGREY	54951032401D	50
4	30.00	AK4951/4FKD-5.0-BASALTGREY	54951042401D	50
5	35.00	AK4951/5FKD-5.0-BASALTGREY	54951052401D	50
6	40.00	AK4951/6FKD-5.0-BASALTGREY	54951062401D	50
7	45.00	AK4951/7FKD-5.0-BASALTGREY	54951072401D	50
8	50.00	AK4951/8FKD-5.0-BASALTGREY	54951082401D	50
9	55.00	AK4951/9FKD-5.0-BASALTGREY	54951092401D	50
...	...	...	...	...
24	130.00	AK4951/24FKD-5.0-BASALTGREY	54951242401D	50

ORDER DATA (SPACING 5.08 MM)

Poles	Width (mm)	Article Designation	Article Number	PU
2	20.16	AKZ4951/2FKD-5.08-BASALTGREY	54951022421D	50
3	25.24	AKZ4951/3FKD-5.08-BASALTGREY	54951032421D	50
4	30.32	AKZ4951/4FKD-5.08-BASALTGREY	54951042421D	50
5	35.40	AKZ4951/5FKD-5.08-BASALTGREY	54951052421D	50
6	40.48	AKZ4951/6FKD-5.08-BASALTGREY	54951062421D	50
7	45.56	AKZ4951/7FKD-5.08-BASALTGREY	54951072421D	50
8	50.64	AKZ4951/8FKD-5.08-BASALTGREY	54951082421D	50
9	55.72	AKZ4951/9FKD-5.08-BASALTGREY	54951092421D	50
...	...	...	...	...
24	131.92	AKZ4951/24FKD-5.08-BASALTGREY	54951242421D	50

ACCESSORIES

	Description	Article Number
	Coding Star CS1-5.0/5.08-RED	50000000021
	Series AK(Z)4951 with pull relief	on request

RATINGS

	cULus			VDE	
Usegroup	B	C	D		
Rated Voltage	300 V	-	300 V	250 V	
Rated Current	10 A	-	10 A	12 A	
Overvoltage Category				III	
Rated Wire Size				min	max
solid	AWG 26-12	-	AWG 26-12	0.2 mm²	2.5 mm² (12 A)
stranded	AWG 26-12	-	AWG 26-12	0.2 mm²	2.5 mm² (12 A)
Test Voltage	1.6 kV	-	1.6 kV	4.0 kV	
Pollution Degree				3	

[1]Colours according to RAL, there may be variations on colour due to production conditions. Special colours on request.

L'IMPULSION
Retrouvez nous sur
www.limpulsion.fr

NEW

AKZ4961/..KD-7.62-BASALTGREY

Spacing 7.62 mm



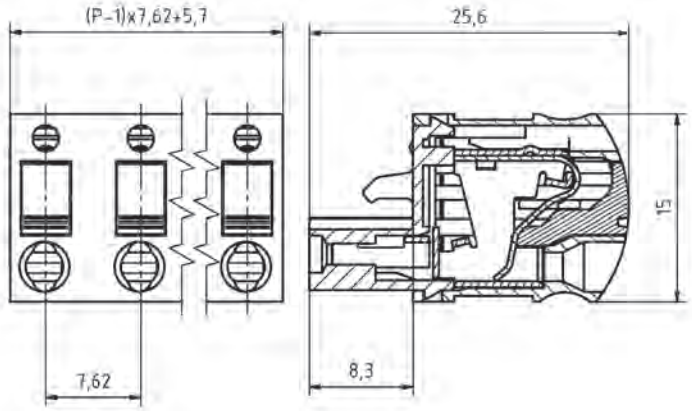

WIRE SIZES	
solid min	0.2 mm²
solid max	2.5 mm²
stranded min	0.2 mm²
stranded max	2.5 mm²
stranded with ferrule min	0.25 mm²
stranded with ferrule max	2.5 mm²
DIMENSIONS	
Stripped Length	12.0 mm
PCB Hole Diameter	-
MATERIALS	
Contact Spring	Copper Alloy
Clamp Spring	Stainless Steel
INSULATING MATERIAL	
Material	PA 6.6
Flammability Class	UL 94 V-0
TEMPERATURES	
Operating Temperature (without mech. load)	-40 °C - 105 °C
WAVE SOLDERING PROCESS	
Soldering Temperature, recommended	-
Peak Soldering Time, recommended	-
REFLOW PROCESS	
Soldering Temperature, recommended	-
Peak Soldering Time, recommended	-

COLOURS[1]

	BASALT GREY, RAL 7012		GREEN, RAL 6018
	LIGHT GREEN, similar RAL 6018		

ACCESSORIES

	Description	Article Number
	Coding Star CS1-5.0/5.08-RED	50000000021

COUNTERPARTS (SPACING 7.62 MM)

Pin Strip
STLZ960

ORDER DATA (SPACING 7.62 MM)

Poles	Width (mm)	Article Designation	Article Number	PU
2	13.32	AKZ4961/2KD-7.62-BASALTGREY	54961020421D	50
3	20.94	AKZ4961/3KD-7.62-BASALTGREY	54961030421D	50
4	28.56	AKZ4961/4KD-7.62-BASALTGREY	54961040421D	50
5	36.18	AKZ4961/5KD-7.62-BASALTGREY	54961050421D	50
6	43.80	AKZ4961/6KD-7.62-BASALTGREY	54961060421D	50
7	51.42	AKZ4961/7KD-7.62-BASALTGREY	54961070421D	50
8	59.04	AKZ4961/8KD-7.62-BASALTGREY	54961080421D	50
9	66.66	AKZ4961/9KD-7.62-BASALTGREY	54961090421D	50
10	74.28	AKZ4961/10KD-7.62-BASALTGREY	54961100421D	50
11	81.90	AKZ4961/11KD-7.62-BASALTGREY	54961110421D	50
12	89.52	AKZ4961/12KD-7.62-BASALTGREY	54961120421D	50

RATINGS

	c UL us			VDE*	
Usegroup	B	C	D		
Rated Voltage	300 V	-	300 V	400 V	
Rated Current	10 A	-	10 A	12 A	
Overvoltage Category				III	
Rated Wire Size				min	max
solid	AWG 26-12	-	AWG 26-12	0.2 mm²	2.5 mm²
stranded	AWG 26-12	-	AWG 26-12	0.2 mm²	2.5 mm²
Test Voltage	1.6 kV	-	1.6 kV	6.0 kV	
Pollution Degree				3	

*Approval Pending

[1]Colours according to RAL, there may be variations on colour due to production conditions. Special colours on request.

Spacing 7.62 mm

AKZ4961/..FKD-7.62-BASALTGREY

NEW

WIRE SIZES	
solid min	0.2 mm²
solid max	2.5 mm²
stranded min	0.2 mm²
stranded max	2.5 mm²
stranded with ferrule min	0.25 mm²
stranded with ferrule max	2.5 mm²
DIMENSIONS	
Stripped Length	12.0 mm
PCB Hole Diameter	-
MATERIALS	
Screw, Flange	Steel
Contact Spring	Copper Alloy
Clamp Spring	Stainless Steel
INSULATING MATERIAL	
Material	PA 6.6
Flammability Class	UL 94 V-0
TEMPERATURES	
Operating Temperature (without mech. load)	-40 °C - 105 °C
WAVE SOLDERING PROCESS	
Soldering Temperature, recommended	-
Peak Soldering Time, recommended	-
REFLOW PROCESS	
Soldering Temperature, recommended	-
Peak Soldering Time, recommended	-



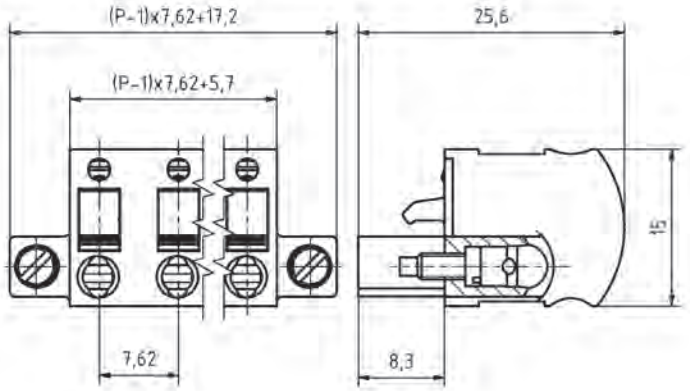

COLOURS[1]

	BASALT GREY, RAL 7012		GREEN, RAL 6018
	LIGHT GREEN, similar RAL 6018		

COUNTERPARTS (SPACING 7.62 MM)

Pin Strip
STLZ965

ACCESSORIES

	Description	Article Number
	Coding Star CS1-5.0/5.08-RED	50000000021

ORDER DATA (SPACING 7.62 MM)

Poles	Width (mm)	Article Designation	Article Number	50
2	24.84	AKZ4961/2FKD-7.62-BASALTGREY	54961022421D	50
3	32.46	AKZ4961/3FKD-7.62-BASALTGREY	54961032421D	50
4	40.08	AKZ4961/4FKD-7.62-BASALTGREY	54961042421D	50
5	47.70	AKZ4961/5FKD-7.62-BASALTGREY	54961052421D	50
6	55.32	AKZ4961/6FKD-7.62-BASALTGREY	54961062421D	50
7	62.94	AKZ4961/7FKD-7.62-BASALTGREY	54961072421D	50
8	70.56	AKZ4961/8FKD-7.62-BASALTGREY	54961082421D	50
9	78.18	AKZ4961/9FKD-7.62-BASALTGREY	54961092421D	50
10	85.80	AKZ4961/10FKD-7.62-BASALTGREY	54961102421D	50
11	93.42	AKZ4961/11FKD-7.62-BASALTGREY	54961112421D	50
12	101.04	AKZ4961/12FKD-7.62-BASALTGREY	54961122421D	50

RATINGS

	B	C	D		
Usegroup					
Rated Voltage	300 V	-	300 V	400 V	
Rated Current	10 A	-	10 A	12 A	
Overvoltage Category				III	
Rated Wire Size				min	max
solid	AWG 26-12	-	AWG 26-12	0.2 mm²	2.5 mm²
stranded	AWG 26-12	-	AWG 26-12	0.2 mm²	2.5 mm²
Test Voltage	1.6 kV	-	1.6 kV	6.0 kV	
Pollution Degree				3	

*Approval Pending

[1]Colours according to RAL, there may be variations on colour due to production conditions. Special colours on request.

L'IMPULSION Retrouvez nous sur www.limpulsion.fr

AK3950/..-5.0-GREEN

Spacing 5.0 mm



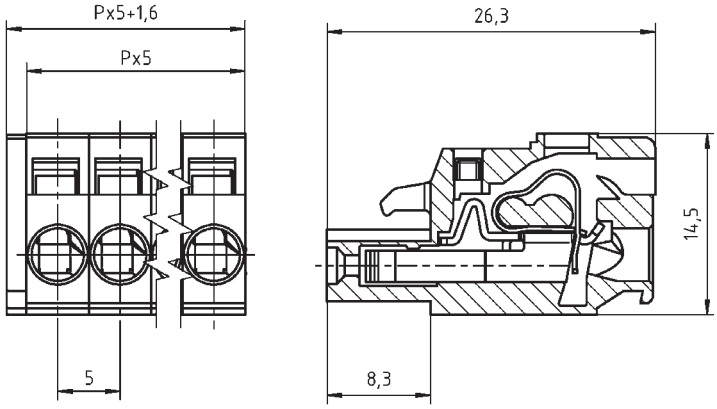

WIRE SIZES	
solid min	0.08 mm²
solid max	2.5 mm²
stranded min	0.08 mm²
stranded max	2.5 mm²
stranded with ferrule min	0.14 mm²
stranded with ferrule max	1.5 mm²
DIMENSIONS	
Stripped Length	8.5 mm
PCB Hole Diameter	-
MATERIALS	
Contact Spring	Copper Alloy
Tension Spring	Stainless Steel
INSULATING MATERIAL	
Material	PA 6.6
Flammability Class	UL 94 V-0
TEMPERATURES	
Operating Temperature (without mech. load)	-40 °C - 105 °C
WAVE SOLDERING PROCESS	
Soldering Temperature, recommended	-
Peak Soldering Time, recommended	-
REFLOW PROCESS	
Soldering Temperature, recommended	-
Peak Soldering Time, recommended	-

COLOURS[1]

GREEN, RAL 6018 PEBBLE GREY, RAL 7032

COUNTERPARTS (SPACING 5.0 MM)

Pin Strip

STL950 STL950-HT STL950-G-HT STL955 STL975

ACCESSORIES

	Description	Article Number
	Bridge, 2-pole, insulated, BRI/2-5.0/5.08-LIGHT GREY	50000000006
	Bridge, 3-pole, insulated, BRI/3-5.0/5.08-LIGHT GREY	50000000007
	Coding Star CS1-5.0/5.08-RED	50000000021

ORDER DATA (SPACING 5.0 MM)

Poles	Width (mm)	Article Designation	Article Number	PU
2	11.60	AK3950/2-5.0-GREEN	53950020001D	50
3	16.60	AK3950/3-5.0-GREEN	53950030001D	50
4	21.60	AK3950/4-5.0-GREEN	53950040001D	50
5	26.60	AK3950/5-5.0-GREEN	53950050001D	50
6	31.60	AK3950/6-5.0-GREEN	53950060001D	50
7	36.60	AK3950/7-5.0-GREEN	53950070001D	50
8	41.60	AK3950/8-5.0-GREEN	53950080001D	50
9	46.60	AK3950/9-5.0-GREEN	53950090001D	50
10	51.60	AK3950/10-5.0-GREEN	53950100001D	50
11	56.60	AK3950/11-5.0-GREEN	53950110001D	50
12	61.60	AK3950/12-5.0-GREEN	53950120001D	50
13	66.60	AK3950/13-5.0-GREEN	53950130001D	50
14	71.60	AK3950/14-5.0-GREEN	53950140001D	50
15	76.60	AK3950/15-5.0-GREEN	53950150001D	50
16	81.60	AK3950/16-5.0-GREEN	53950160001D	50
17	86.60	AK3950/17-5.0-GREEN	53950170001D	50
18	91.60	AK3950/18-5.0-GREEN	53950180001D	50
19	96.60	AK3950/19-5.0-GREEN	53950190001D	50
20	101.60	AK3950/20-5.0-GREEN	53950200001D	50
21	106.60	AK3950/21-5.0-GREEN	53950210001D	50
22	111.60	AK3950/22-5.0-GREEN	53950220001D	50
23	116.60	AK3950/23-5.0-GREEN	53950230001D	50
24	121.60	AK3950/24-5.0-GREEN	53950240001D	50

RATINGS

	cULus B	cULus C	cULus D	VDE	
Usegroup					
Rated Voltage	300 V	-	300 V	250 V	
Rated Current	15 A	-	10 A	12 A	
Overvoltage Category				III	
Rated Wire Size				min	max
solid	AWG 28-12	-	AWG 28-12	0.5 mm² (5 A)	2.5 mm² (12 A)
stranded	AWG 28-12	-	AWG 28-12	0.5 mm² (5 A)	2.5 mm² (12 A)
Test Voltage	1.6 kV	-	1.6 kV	4.0 kV	
Pollution Degree				3	

[1]Colours according to RAL, there may be variations on colour due to production conditions. Special colours on request.

Spacing 3.5 mm

STL1350/..-3.5-V-BLACK

WIRE SIZES	
solid min	-
solid max	-
stranded min	-
stranded max	-
stranded with ferrule min	-
stranded with ferrule max	-
DIMENSIONS	
Stripped Length	-
PCB Hole Diameter	1.3 mm
MATERIALS	
Contact Pin	Brass
INSULATING MATERIAL	
Material	PA 6.6
Flammability Class	UL 94 V-0
TEMPERATURES	
Operating Temperature (without mech. load)	-40 °C - 105 °C
WAVE SOLDERING PROCESS	
Soldering Temperature, recommended	260 °C
Peak Soldering Time, recommended	3-4 s
REFLOW PROCESS	
Soldering Temperature, recommended	-
Peak Soldering Time, recommended	-



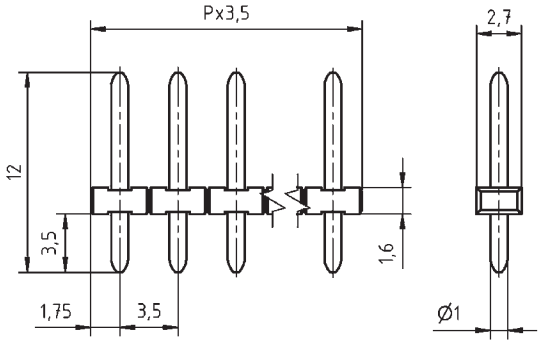

COLOURS[1]

BLACK, RAL 9011		LIGHT GREY, RAL 7035	
GREEN, RAL 6018		ORANGE, RAL 2011	
RED, RAL 3003		BLUE, RAL 5015	
YELLOW, RAL 1018			

COUNTERPARTS (SPACING 3.5 MM)

PCB Terminal Block

AK1350

ORDER DATA (SPACING 3.5 MM)

Poles	Width (mm)	Article Designation	Article Number	PU
2	7.00	STL1350/2-3.5-V-BLACK	51350025001G	250
3	10.50	STL1350/3-3.5-V-BLACK	51350035001G	250
4	14.00	STL1350/4-3.5-V-BLACK	51350045001G	250
5	17.50	STL1350/5-3.5-V-BLACK	51350055001G	250
6	21.00	STL1350/6-3.5-V-BLACK	51350065001G	250
7	24.50	STL1350/7-3.5-V-BLACK	51350075001G	250
8	28.00	STL1350/8-3.5-V-BLACK	51350085001E	100
9	31.50	STL1350/9-3.5-V-BLACK	51350095001E	100
10	35.00	STL1350/10-3.5-V-BLACK	51350105001E	100
11	38.50	STL1350/11-3.5-V-BLACK	51350115001E	100
12	42.00	STL1350/12-3.5-V-BLACK	51350125001E	100
13	45.50	STL1350/13-3.5-V-BLACK	51350135001D	50
14	49.00	STL1350/14-3.5-V-BLACK	51350145001D	50
15	52.50	STL1350/15-3.5-V-BLACK	51350155001D	50
16	56.00	STL1350/16-3.5-V-BLACK	51350165001D	50
17	59.50	STL1350/17-3.5-V-BLACK	51350175001D	50
18	63.00	STL1350/18-3.5-V-BLACK	51350185001D	50
19	66.50	STL1350/19-3.5-V-BLACK	51350195001D	50
20	70.00	STL1350/20-3.5-V-BLACK	51350205001D	50
21	73.50	STL1350/21-3.5-V-BLACK	51350215001D	50
22	77.00	STL1350/22-3.5-V-BLACK	51350225001D	50
23	80.50	STL1350/23-3.5-V-BLACK	51350235001D	50
24	84.00	STL1350/24-3.5-V-BLACK	51350245001D	50

RATINGS	c UL us			VDE
Usegroup	B	C	D	
Rated Voltage	150 V	-	-	125 V
Rated Current	10 A	-	-	8 A
Overvoltage Category				III
Test Voltage	1.3 kV	-	-	2.5 kV
Pollution Degree				2

[1]Colours according to RAL, there may be variations on colour due to production conditions. Special colours on request.

L'IMPULSION
Retrouvez nous sur
www.limpulsion.fr

STL1350/..-3.5-V-P3.5-BK-HT

Spacing 3.5 mm



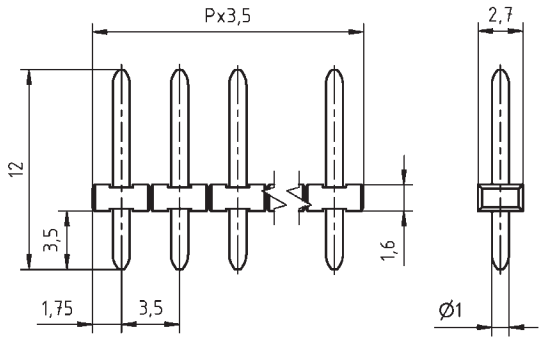

WIRE SIZES	
solid min	-
solid max	-
stranded min	-
stranded max	-
stranded with ferrule min	-
stranded with ferrule max	-
DIMENSIONS	
Stripped Length	-
PCB Hole Diameter	1.3 mm
MATERIALS	
Contact Pin	Brass
INSULATING MATERIAL	
Material	LCP
Flammability Class	UL 94 V-0
TEMPERATURES	
Operating Temperature (without mech. load)	-40 °C - 105 °C
WAVE SOLDERING PROCESS	
Soldering Temperature, recommended	260 °C
Peak Soldering Time, recommended	3-4 s
REFLOW PROCESS	
Soldering Temperature, recommended	217 °C - 245 °C
Peak Soldering Time, recommended	60 s

COLOURS[1]
BLACK, RAL 9011

COUNTERPARTS (SPACING 3.5 MM)
PCB Terminal Block
AK1350

ORDER DATA (SPACING 3.5 MM)

Poles	Width (mm)	Article Designation	Article Number	PU
2	7.00	STL1350/2-3.5-V-P3.5-BK-HT	51350025031G	250
3	10.50	STL1350/3-3.5-V-P3.5-BK-HT	51350035031G	250
4	14.00	STL1350/4-3.5-V-P3.5-BK-HT	51350045031G	250
5	17.50	STL1350/5-3.5-V-P3.5-BK-HT	51350055031G	250
6	21.00	STL1350/6-3.5-V-P3.5-BK-HT	51350065031G	250
7	24.50	STL1350/7-3.5-V-P3.5-BK-HT	51350075031G	250
8	28.00	STL1350/8-3.5-V-P3.5-BK-HT	51350085031E	100
9	31.50	STL1350/9-3.5-V-P3.5-BK-HT	51350095031E	100
10	35.00	STL1350/10-3.5-V-P3.5-BK-HT	51350105031E	100
11	38.50	STL1350/11-3.5-V-P3.5-BK-HT	51350115031E	100
12	42.00	STL1350/12-3.5-V-P3.5-BK-HT	51350125031E	100
13	45.50	STL1350/13-3.5-V-P3.5-BK-HT	51350135031D	50
14	49.00	STL1350/14-3.5-V-P3.5-BK-HT	51350145031D	50
15	52.50	STL1350/15-3.5-V-P3.5-BK-HT	51350155031D	50
16	56.00	STL1350/16-3.5-V-P3.5-BK-HT	51350165031D	50
17	59.50	STL1350/17-3.5-V-P3.5-BK-HT	51350175031D	50
18	63.00	STL1350/18-3.5-V-P3.5-BK-HT	51350185031D	50
19	66.50	STL1350/19-3.5-V-P3.5-BK-HT	51350195031D	50
20	70.00	STL1350/20-3.5-V-P3.5-BK-HT	51350205031D	50

RATINGS				
Usegroup	B	C	D	
Rated Voltage	150 V	-	-	125 V
Rated Current	10 A	-	-	8 A
Overvoltage Category				III
Test Voltage	1.3 kV	-	-	2.5 kV
Pollution Degree				2

[1]Colours according to RAL, there may be variations on colour due to production conditions.

Spacing 3.5 mm

STL1350/..-3.5-V-P3.5-BK-HT

WIRE SIZES	
solid min	-
solid max	-
stranded min	-
stranded max	-
stranded with ferrule min	-
stranded with ferrule max	-
DIMENSIONS	
Stripped Length	-
PCB Hole Diameter	1.3 mm
MATERIALS	
Contact Pin	Brass
INSULATING MATERIAL	
Material	LCP
Flammability Class	UL 94 V-0
TEMPERATURES	
Operating Temperature (without mech. load)	-40 °C - 105 °C
WAVE SOLDERING PROCESS	
Soldering Temperature, recommended	260 °C
Peak Soldering Time, recommended	3-4 s
REFLOW PROCESS	
Soldering Temperature, recommended	217 °C - 245 °C
Peak Soldering Time, recommended	60 s



Technical Drawing see page 222

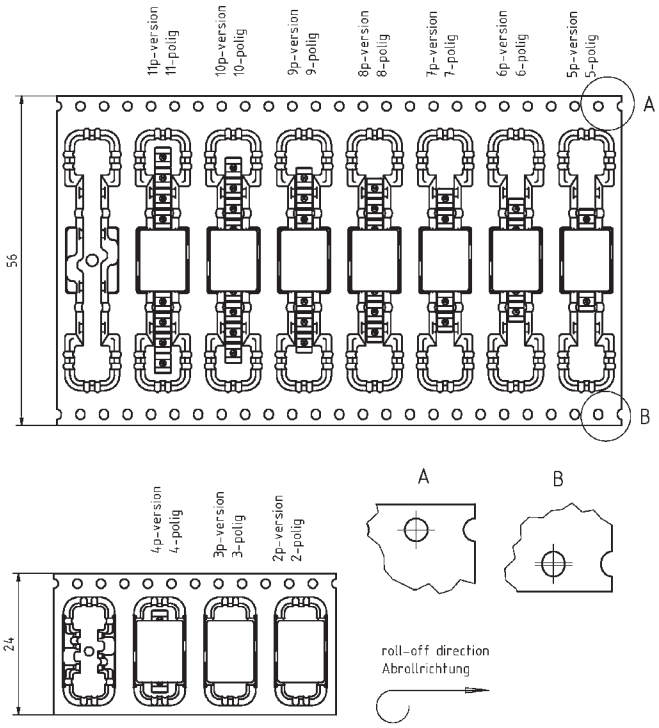

COLOURS[1]
BLACK, RAL 9011

COUNTERPARTS (SPACING 3.5 MM)
PCB Terminal Block
AK1350

TAPE-ON-REEL

Poles	Reel (RD/")	Width (R/mm)	Pitch (RP/mm)	Pieces (PCS)
2-4	13	24	12	330
5-11	13	56	16	250

ORDER DATA (SPACING 3.5 MM)

Poles	Width (mm)	Article Designation	Article Number	PU
2	7.00	STL1350/2-3.5-V-P3.5-BK-HT	51350025031R	330
3	10.50	STL1350/3-3.5-V-P3.5-BK-HT	51350035031R	330
4	14.00	STL1350/4-3.5-V-P3.5-BK-HT	51350045031R	330
5	17.50	STL1350/5-3.5-V-P3.5-BK-HT	51350055031R	250
6	21.00	STL1350/6-3.5-V-P3.5-BK-HT	51350065031R	250
7	24.50	STL1350/7-3.5-V-P3.5-BK-HT	51350075031R	250
8	28.00	STL1350/8-3.5-V-P3.5-BK-HT	51350085031R	250
9	31.50	STL1350/9-3.5-V-P3.5-BK-HT	51350095031R	250
10	35.00	STL1350/10-3.5-V-P3.5-BK-HT	51350105031R	250
11	38.50	STL1350/11-3.5-V-P3.5-BK-HT	51350115031R	250

RATINGS	c UL us			VDE
Usegroup	B	C	D	
Rated Voltage	150 V	-	-	125 V
Rated Current	10 A	-	-	8 A
Overvoltage Category				III
Test Voltage	1.3 kV	-	-	2.5 kV
Pollution Degree				2

[1]Colours according to RAL, there may be variations on colour due to production conditions.

L'IMPULSION
Retrouvez nous sur
www.limpulsion.fr

NEW

STL1350/..-3.5-V-PT9.0-BK-SMD

Spacing 3.5 mm



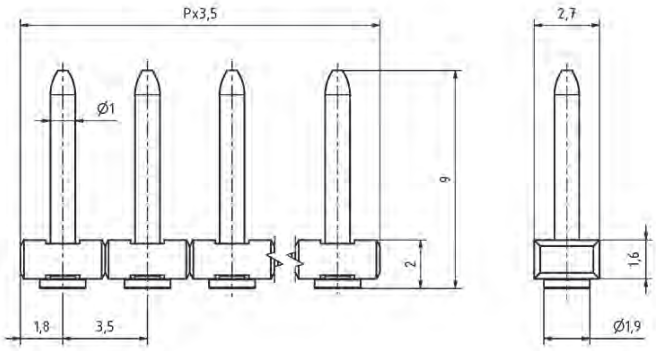

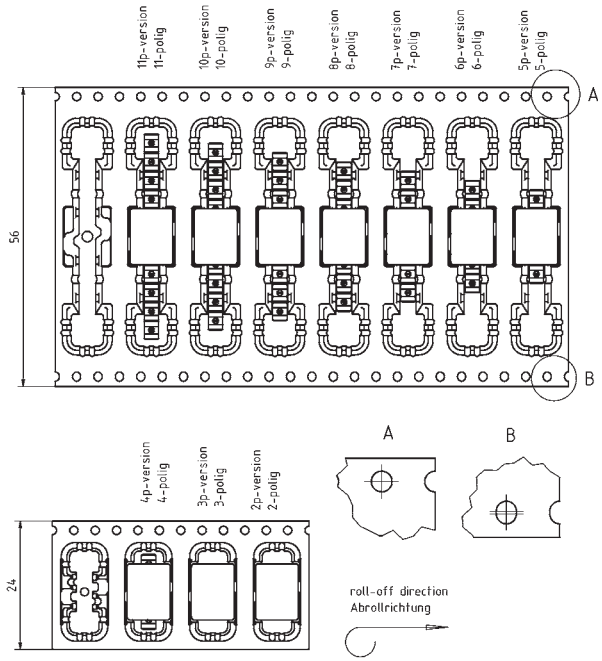

WIRE SIZES	
solid min	-
solid max	-
stranded min	-
stranded max	-
stranded with ferrule min	-
stranded with ferrule max	-
DIMENSIONS	
Stripped Length	-
PCB Hole Diameter	1.3 mm
MATERIALS	
Contact Pin	Brass
INSULATING MATERIAL	
Material	LCP
Flammability Class	UL 94 V-0
TEMPERATURES	
Operating Temperature (without mech. load)	-40 °C - 105 °C
WAVE SOLDERING PROCESS	
Soldering Temperature, recommended	260 °C
Peak Soldering Time, recommended	3-4 s
REFLOW PROCESS	
Soldering Temperature, recommended	217 °C - 245 °C
Peak Soldering Time, recommended	60 s

COLOURS[1]
BLACK, RAL 9011

COUNTERPARTS (SPACING 3.5 MM)
PCB Terminal Block
AK1350

RATINGS	cULus			VDE
Usegroup	B	C	D	
Rated Voltage	150 V	-	-	125 V
Rated Current	10 A	-	-	8 A
Overvoltage Category				III
Test Voltage	1.3 kV	-	-	2.5 kV
Pollution Degree				2

TAPE-ON-REEL

Poles	Reel (RD/")	Width (R/mm)	Pitch (RP/mm)	Pieces (PCS)
2-4	13	24	12	330
5-11	13	56	16	250

ORDER DATA (SPACING 3.5 MM)

Poles	Width (mm)	Article Designation	Article Number	PU
2	7.00	STL1350/2-3.5-V-PT9.0-BK-SMD	51350029031R	330
3	10.50	STL1350/3-3.5-V-PT9.0-BK-SMD	51350039031R	330
4	14.00	STL1350/4-3.5-V-PT9.0-BK-SMD	51350049031R	330
5	17.50	STL1350/5-3.5-V-PT9.0-BK-SMD	51350059031R	250
6	21.00	STL1350/6-3.5-V-PT9.0-BK-SMD	51350069031R	250
7	24.50	STL1350/7-3.5-V-PT9.0-BK-SMD	51350079031R	250
8	28.00	STL1350/8-3.5-V-PT9.0-BK-SMD	51350089031R	250
9	31.50	STL1350/9-3.5-V-PT9.0-BK-SMD	51350099031R	250
10	35.00	STL1350/10-3.5-V-PT9.0-BK-SMD	51350109031R	250
11	38.50	STL1350/11-3.5-V-PT9.0-BK-SMD	51350119031R	250

[1]Colours according to RAL, there may be variations on colour due to production conditions.

Spacing 3.5 mm

STL1350/..-3.5-H-BLACK

WIRE SIZES	
solid min	-
solid max	-
stranded min	-
stranded max	-
stranded with ferrule min	-
stranded with ferrule max	-
DIMENSIONS	
Stripped Length	-
PCB Hole Diameter	1.3 mm
MATERIALS	
Contact Pin	Brass
INSULATING MATERIAL	
Material	PA 6.6
Flammability Class	UL 94 V-0
TEMPERATURES	
Operating Temperature (without mech. load)	-40 °C - 105 °C
WAVE SOLDERING PROCESS	
Soldering Temperature, recommended	260 °C
Peak Soldering Time, recommended	3-4 s
REFLOW PROCESS	
Soldering Temperature, recommended	-
Peak Soldering Time, recommended	-



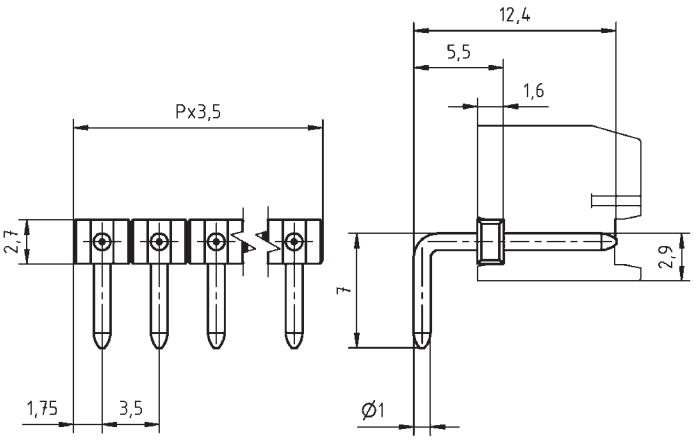

COLOURS[1]

BLACK, RAL 9011		LIGHT GREY, RAL 7035	
GREEN, RAL 6018		ORANGE, RAL 2011	
RED, RAL 3003		BLUE, RAL 5015	
YELLOW, RAL 1018			

COUNTERPARTS (SPACING 3.5 MM)

PCB Terminal Block
AK1350

ORDER DATA (SPACING 3.5 MM)

Poles	Width (mm)	Article Designation	Article Number	PU
2	7.00	STL1350/2-3.5-H-BLACK	51350025010E	100
3	10.50	STL1350/3-3.5-H-BLACK	51350035010E	100
4	14.00	STL1350/4-3.5-H-BLACK	51350045010E	100
5	17.50	STL1350/5-3.5-H-BLACK	51350055010D	50
6	21.00	STL1350/6-3.5-H-BLACK	51350065010D	50
7	24.50	STL1350/7-3.5-H-BLACK	51350075010D	50
8	28.00	STL1350/8-3.5-H-BLACK	51350085010D	50
9	31.50	STL1350/9-3.5-H-BLACK	51350095010D	50
10	35.00	STL1350/10-3.5-H-BLACK	51350105010D	50
11	38.50	STL1350/11-3.5-H-BLACK	51350115010D	50
12	42.00	STL1350/12-3.5-H-BLACK	51350125010D	50
13	45.50	STL1350/13-3.5-H-BLACK	51350135010D	50
14	49.00	STL1350/14-3.5-H-BLACK	51350145010D	50
15	52.50	STL1350/15-3.5-H-BLACK	51350155010D	50
16	56.00	STL1350/16-3.5-H-BLACK	51350165010D	50
17	59.50	STL1350/17-3.5-H-BLACK	51350175010D	50
18	63.00	STL1350/18-3.5-H-BLACK	51350185010D	50
19	66.50	STL1350/19-3.5-H-BLACK	51350195010D	50
20	70.00	STL1350/20-3.5-H-BLACK	51350205010D	50
21	73.50	STL1350/21-3.5-H-BLACK	51350215010D	50
22	77.00	STL1350/22-3.5-H-BLACK	51350225010D	50
23	80.50	STL1350/23-3.5-H-BLACK	51350235010D	50
24	84.00	STL1350/24-3.5-H-BLACK	51350245010D	50

RATINGS	c UL us			VDE
Usegroup	B	C	D	
Rated Voltage	150 V	-	-	125 V
Rated Current	10 A	-	-	8 A
Overvoltage Category				III
Test Voltage	1.3 kV	-	-	2.5 kV
Pollution Degree				2

[1]Colours according to RAL, there may be variations on colour due to production conditions. Special colours on request.

L'IMPULSION
Retrouvez nous sur
www.limpulsion.fr

STL1350/..-3.5-H-P3.5-BK-HT

Spacing 3.5 mm



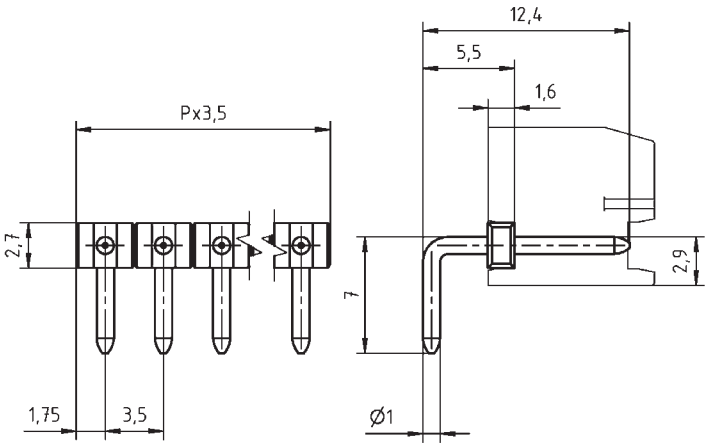

WIRE SIZES	
solid min	-
solid max	-
stranded min	-
stranded max	-
stranded with ferrule min	-
stranded with ferrule max	-
DIMENSIONS	
Stripped Length	-
PCB Hole Diameter	1.3 mm
MATERIALS	
Contact Pin	Brass
INSULATING MATERIAL	
Material	LCP
Flammability Class	UL 94 V-0
TEMPERATURES	
Operating Temperature (without mech. load)	-40 °C - 105 °C
WAVE SOLDERING PROCESS	
Soldering Temperature, recommended	260 °C
Peak Soldering Time, recommended	3-4 s
REFLOW PROCESS	
Soldering Temperature, recommended	217 °C - 245 °C
Peak Soldering Time, recommended	60 s

COLOURS[1]
BLACK, RAL 9011

COUNTERPARTS (SPACING 3.5 MM)
PCB Terminal Block
AK1350

RATINGS				
Usegroup	B	C	D	
Rated Voltage	150 V	-	-	125 V
Rated Current	10 A	-	-	8 A
Overvoltage Category				III
Test Voltage	1.3 kV	-	-	2.5 kV
Pollution Degree				2

ORDER DATA (SPACING 3.5 MM)

Poles	Width (mm)	Article Designation	Article Number	PU
2	7.00	STL1350/2-3.5-H-P3.5-BK-HT	51350025101E	100
3	10.50	STL1350/3-3.5-H-P3.5-BK-HT	51350035101E	100
4	14.00	STL1350/4-3.5-H-P3.5-BK-HT	51350045101E	100
5	17.50	STL1350/5-3.5-H-P3.5-BK-HT	51350055101D	50
6	21.00	STL1350/6-3.5-H-P3.5-BK-HT	51350065101D	50
7	24.50	STL1350/7-3.5-H-P3.5-BK-HT	51350075101D	50
8	28.00	STL1350/8-3.5-H-P3.5-BK-HT	51350085101D	50
9	31.50	STL1350/9-3.5-H-P3.5-BK-HT	51350095101D	50
10	35.00	STL1350/10-3.5-H-P3.5-BK-HT	51350105101D	50
11	38.50	STL1350/11-3.5-H-P3.5-BK-HT	51350115101D	50
12	42.00	STL1350/12-3.5-H-P3.5-BK-HT	51350125101D	50
13	45.50	STL1350/13-3.5-H-P3.5-BK-HT	51350135101D	50
14	49.00	STL1350/14-3.5-H-P3.5-BK-HT	51350145101D	50
15	52.50	STL1350/15-3.5-H-P3.5-BK-HT	51350155101D	50
16	56.00	STL1350/16-3.5-H-P3.5-BK-HT	51350165101D	50
17	59.50	STL1350/17-3.5-H-P3.5-BK-HT	51350175101D	50
18	63.00	STL1350/18-3.5-H-P3.5-BK-HT	51350185101D	50
19	66.50	STL1350/19-3.5-H-P3.5-BK-HT	51350195101D	50
20	70.00	STL1350/20-3.5-H-P3.5-BK-HT	51350205101D	50

[1]Colours according to RAL, there may be variations on colour due to production conditions.

Spacing 3.5 mm / Spacing 3.81 mm

STL1550/..G-3.5-V-GREEN
STLZ1550/..G-3.81-V-GREEN

WIRE SIZES	
solid min	-
solid max	-
stranded min	-
stranded max	-
stranded with ferrule min	-
stranded with ferrule max	-
DIMENSIONS	
Stripped Length	-
PCB Hole Diameter	1.2 mm
MATERIALS	
Contact Pin	Copper Alloy
INSULATING MATERIAL	
Material	PA 6.6
Flammability Class	UL 94 V-0
TEMPERATURES	
Operating Temperature (without mech. load)	-40 °C - 105 °C
WAVE SOLDERING PROCESS	
Soldering Temperature, recommended	260 °C
Peak Soldering Time, recommended	3-4 s
REFLOW PROCESS	
Soldering Temperature, recommended	-
Peak Soldering Time, recommended	-



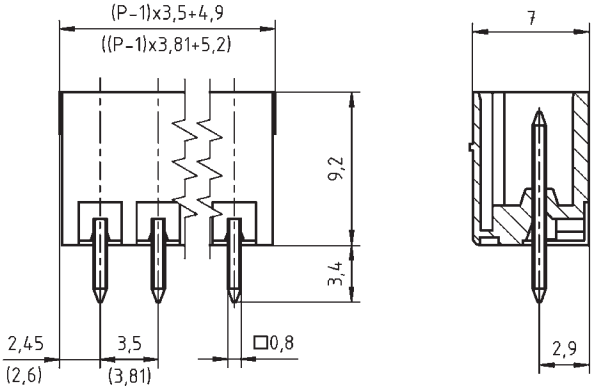

COLOURS[1]

	GREEN, RAL 6018		BLACK, RAL 9011
	BASALT GREY, RAL 7012		LIGHT GREEN, similar RAL 6018

COUNTERPARTS (SPACING 3.5 MM)

PCB Terminal Block

AK1550 AK1700 AK1710 AK4541 AK4551 AK4561

COUNTERPARTS (SPACING 3.81 MM)

PCB Terminal Block

AKZ1550 AKZ1700 AKZ1710 AKZ4551 AKZ4561

ORDER DATA (SPACING 3.5 MM)

Poles	Width (mm)	Article Designation	Article Number	PU
2	8.40	STL1550/2G-3.5-V-GREEN	51550025101F	200
3	11.90	STL1550/3G-3.5-V-GREEN	51550035101F	200
4	15.40	STL1550/4G-3.5-V-GREEN	51550045101F	200
5	18.90	STL1550/5G-3.5-V-GREEN	51550055101F	200
6	22.40	STL1550/6G-3.5-V-GREEN	51550065101E	100
7	25.90	STL1550/7G-3.5-V-GREEN	51550075101E	100
8	29.40	STL1550/8G-3.5-V-GREEN	51550085101D	50
9	32.90	STL1550/9G-3.5-V-GREEN	51550095101D	50
...	...	...	...	...
20	71.40	STL1550/20G-3.5-V-GREEN	51550205101D	50

ORDER DATA (SPACING 3.81 MM)

Poles	Width (mm)	Article Designation	Article Number	PU
2	9.01	STLZ1550/2G-3.81-V-GREEN	51550025125F	200
3	12.82	STLZ1550/3G-3.81-V-GREEN	51550035125F	200
4	16.63	STLZ1550/4G-3.81-V-GREEN	51550045125F	200
5	20.44	STLZ1550/5G-3.81-V-GREEN	51550055125F	200
6	24.25	STLZ1550/6G-3.81-V-GREEN	51550065125E	100
7	28.06	STLZ1550/7G-3.81-V-GREEN	51550075125E	100
8	31.87	STLZ1550/8G-3.81-V-GREEN	51550085125D	50
9	35.68	STLZ1550/9G-3.81-V-GREEN	51550095125D	50
...	...	...	...	...
20	77.59	STLZ1550/20G-3.81-V-GREEN	51550205125D	50

ACCESSORIES

	Description	Article Number
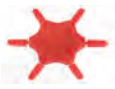	Coding Star CS1-3.5/3.81-RED	50000000023
	Separating Element SE-STL1550-GREEN	51550000002

RATINGS

	cULus		VDE	
Usegroup	B	C	D	
Rated Voltage	300 V	-	300 V	160 V
Rated Current	10 A	-	10 A	10 A
Overvoltage Category				III
Test Voltage	1.6 kV	-	1.6 kV	2.5 kV
Pollution Degree				3

[1]Colours according to RAL, there may be variations on colour due to production conditions. Special colours on request.

L'IMPULSION
Retrouvez nous sur
www.limpulsion.fr

NEW

STL1550/..G-3.5-V-P2.6-BK-HT
STLZ1550/..G-3.81-V-P2.6-BK-HT

Spacing 3.5 mm / Spacing 3.81 mm
Pin length 1.4 mm / 3.5 mm also available



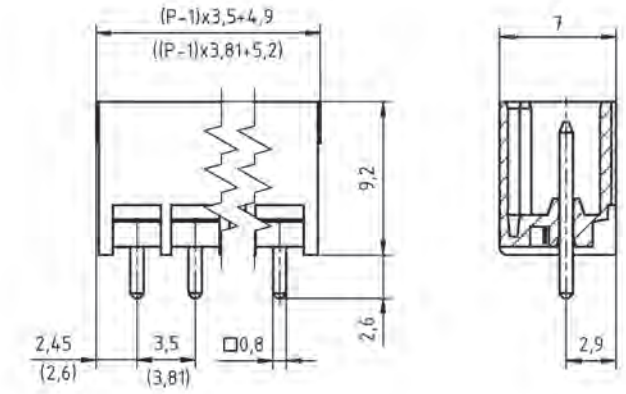

WIRE SIZES	
solid min	-
solid max	-
stranded min	-
stranded max	-
stranded with ferrule min	-
stranded with ferrule max	-
DIMENSIONS	
Stripped Length	-
PCB Hole Diameter	1.2 mm
MATERIALS	
Contact Pin	Copper Alloy
INSULATING MATERIAL	
Material	PA
Flammability Class	UL 94 V-0
TEMPERATURES	
Operating Temperature (without mech. load)	-40 °C - 105 °C
WAVE SOLDERING PROCESS	
Soldering Temperature, recommended	260 °C
Peak Soldering Time, recommended	3-4 s
REFLOW PROCESS	
Soldering Temperature, recommended	217 °C - 245 °C
Peak Soldering Time, recommended	60 s

COLOURS1
BLACK, RAL 9011

COUNTERPARTS (SPACING 3.5 MM)
PCB Terminal Block
AK1550 AK1700 AK1710 AK4541 AK4551 AK4561

COUNTERPARTS (SPACING 3.81 MM)
PCB Terminal Block
AKZ1550 AKZ1700 AKZ1710 AKZ4551 AKZ4561

ACCESSORIES

	Description	Article Number
	Coding Star CS1-3.5/3.81-NATURAL-HT	50000000022

ORDER DATA (SPACING 3.5 MM)

Poles	Width (mm)	Article Designation	Article Number	PU
2	8.40	STL1550/2G-3.5-V-P2.6-BK-HT	51550025336F	200
3	11.90	STL1550/3G-3.5-V-P2.6-BK-HT	51550035336F	200
4	15.40	STL1550/4G-3.5-V-P2.6-BK-HT	51550045336F	200
5	18.90	STL1550/5G-3.5-V-P2.6-BK-HT	51550055336F	200
6	22.40	STL1550/6G-3.5-V-P2.6-BK-HT	51550065336E	100
7	25.90	STL1550/7G-3.5-V-P2.6-BK-HT	51550075336E	100
8	29.40	STL1550/8G-3.5-V-P2.6-BK-HT	51550085336D	50
9	32.90	STL1550/9G-3.5-V-P2.6-BK-HT	51550095336D	50
...	...	...	...	...
12	43.40	STL1550/12G-3.5-V-P2.6-BK-HT	51550125336D	50

ORDER DATA (SPACING 3.81 MM)

Poles	Width (mm)	Article Designation	Article Number	PU
2	9.01	STLZ1550/2G-3.81-V-P2.6-BK-HT	51550025343F	200
3	12.82	STLZ1550/3G-3.81-V-P2.6-BK-HT	51550035343F	200
4	16.63	STLZ1550/4G-3.81-V-P2.6-BK-HT	51550045343F	200
5	20.44	STLZ1550/5G-3.81-V-P2.6-BK-HT	51550055343F	200
6	24.25	STLZ1550/6G-3.81-V-P2.6-BK-HT	51550065343E	100
7	28.06	STLZ1550/7G-3.81-V-P2.6-BK-HT	51550075343E	100
8	31.87	STLZ1550/8G-3.81-V-P2.6-BK-HT	51550085343D	50
9	35.68	STLZ1550/9G-3.81-V-P2.6-BK-HT	51550095343D	50
...	...	...	...	...
12	47.11	STLZ1550/12G-3.81-V-P2.6-BK-HT	51550125343D	50

RATINGS

	c UL us			VDE
Usegroup	B	C	D	
Rated Voltage	300 V	-	300 V	160 V
Rated Current	10 A	-	10 A	10 A
Overvoltage Category				III
Test Voltage	1.6 kV	-	1.6 kV	2.5 kV
Pollution Degree				3

[1]Colours according to RAL, there may be variations on colour due to production conditions.

Spacing 3.5 mm / Spacing 3.81 mm
Pin length 1.4 mm / 3.5 mm also available

STL1550/..G-3.5-V-P2.6-BK-HT
STLZ1550/..G-3.81-V-P2.6-BK-HT

NEW

WIRE SIZES	
solid min	-
solid max	-
stranded min	-
stranded max	-
stranded with ferrule min	-
stranded with ferrule max	-
DIMENSIONS	
Stripped Length	-
PCB Hole Diameter	1.2 mm
MATERIALS	
Contact Pin	Copper Alloy
INSULATING MATERIAL	
Material	PA
Flammability Class	UL 94 V-0
TEMPERATURES	
Operating Temperature (without mech. load)	-40 °C - 105 °C
WAVE SOLDERING PROCESS	
Soldering Temperature, recommended	260 °C
Peak Soldering Time, recommended	3-4 s
REFLOW PROCESS	
Soldering Temperature, recommended	217 °C - 245 °C
Peak Soldering Time, recommended	60 s



Technical Drawing see page 228

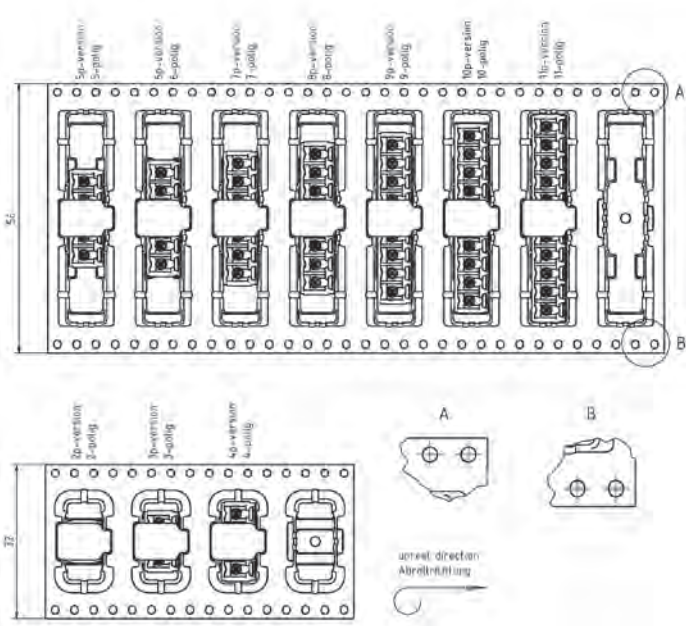

COLOURS[1]

BLACK, RAL 9011

COUNTERPARTS (SPACING 3.5 MM)

PCB Terminal Block

AK1550 AK1700 AK1710 AK4541 AK4551 AK4561

COUNTERPARTS (SPACING 3.81 MM)

PCB Terminal Block

AKZ1550 AKZ1700 AKZ1710 AKZ4551 AKZ4561

TAPE-ON-REEL

Poles	Reel (RD/")	Width (R/mm)	Pitch (RP/mm)	Pieces (PCS)
2-4	13	32	16	200
5-11	13	56	16	200

ACCESSORIES

	Description	Article Number
	Coding Star CS1-3.5/3.81-NATURAL-HT	50000000022

ORDER DATA (SPACING 3.5 MM)

Poles	Width (mm)	Article Designation	Article Number	PU
2	8.40	STL1550/2G-3.5-V-P2.6-BK-HT	51550025336R	200
3	11.90	STL1550/3G-3.5-V-P2.6-BK-HT	51550035336R	200
4	15.40	STL1550/4G-3.5-V-P2.6-BK-HT	51550045336R	200
5	18.90	STL1550/5G-3.5-V-P2.6-BK-HT	51550055336R	200
6	22.40	STL1550/6G-3.5-V-P2.6-BK-HT	51550065336R	200
7	25.90	STL1550/7G-3.5-V-P2.6-BK-HT	51550075336R	200
8	29.40	STL1550/8G-3.5-V-P2.6-BK-HT	51550085336R	200
9	32.90	STL1550/9G-3.5-V-P2.6-BK-HT	51550095336R	200
10	36.40	STL1550/10G-3.5-V-P2.6-BK-HT	51550105336R	200
11	39.90	STL1550/11G-3.5-V-P2.6-BK-HT	51550115336R	200

ORDER DATA (SPACING 3.81 MM)

Poles	Width (mm)	Article Designation	Article Number	PU
2	9.01	STLZ1550/2G-3.81-V-P2.6-BK-HT	51550025343R	200
3	12.82	STLZ1550/3G-3.81-V-P2.6-BK-HT	51550035343R	200
4	16.63	STLZ1550/4G-3.81-V-P2.6-BK-HT	51550045343R	200
5	20.44	STLZ1550/5G-3.81-V-P2.6-BK-HT	51550055343R	200
6	24.25	STLZ1550/6G-3.81-V-P2.6-BK-HT	51550065343R	200
7	28.06	STLZ1550/7G-3.81-V-P2.6-BK-HT	51550075343R	200
8	31.87	STLZ1550/8G-3.81-V-P2.6-BK-HT	51550085343R	200
9	35.68	STLZ1550/9G-3.81-V-P2.6-BK-HT	51550095343R	200
10	39.49	STLZ1550/10G-3.81-V-P2.6-BK-HT	51550105343R	200
11	43.30	STLZ1550/11G-3.81-V-P2.6-BK-HT	51550115343R	200

[1]Colours according to RAL, there may be variations on colour due to production conditions.

RATINGS

	c UL us			VDE
Usegroup	B	C	D	
Rated Voltage	300 V	-	300 V	160 V
Rated Current	10 A	-	10 A	10 A
Overvoltage Category				III
Test Voltage	1.6 kV	-	1.6 kV	2.5 kV
Pollution Degree				3

L'IMPULSION
Retrouvez nous sur
www.limpulsion.fr

STL1550/..F-3.5-V-GREEN
STLZ1550/..F-3.81-V-GREEN

Spacing 3.5 mm / Spacing 3.81 mm



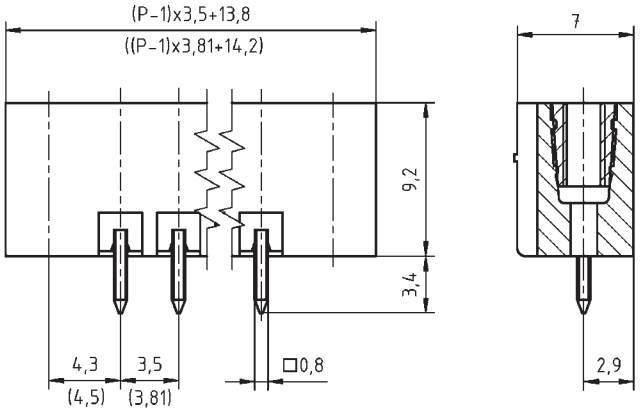

WIRE SIZES	
solid min	-
solid max	-
stranded min	-
stranded max	-
stranded with ferrule min	-
stranded with ferrule max	-
DIMENSIONS	
Stripped Length	-
PCB Hole Diameter	1.2 mm
MATERIALS	
Thread Insert, Flange	Brass
Contact Pin	Copper Alloy
INSULATING MATERIAL	
Material	PA 6.6
Flammability Class	UL 94 V-0
TEMPERATURES	
Operating Temperature (without mech. load)	-40 °C - 105 °C
WAVE SOLDERING PROCESS	
Soldering Temperature, recommended	260 °C
Peak Soldering Time, recommended	3-4 s
REFLOW PROCESS	
Soldering Temperature, recommended	-
Peak Soldering Time, recommended	-

COLOURS[1]

GREEN, RAL 6018	BLACK, RAL 9011
BASALT GREY, RAL 7012	LIGHT GREEN, similar RAL 6018

COUNTERPARTS (SPACING 3.5 MM)

PCB Terminal Block

AK1550 AK1700 AK1710 AK4551 AK4561

COUNTERPARTS (SPACING 3.81 MM)

PCB Terminal Block

AKZ1550 AKZ1700 AKZ1710 AKZ4551 AKZ4561

ACCESSORIES

	Description	Article Number
	Coding Star CS1-3.5/3.81-RED	50000000023
	Separating Element SE-STL1550-GREEN	51550000002

RATINGS

	c UL us			VDE
Usegroup	B	C	D	
Rated Voltage	300 V	-	300 V	160 V
Rated Current	10 A	-	10 A	10 A
Overvoltage Category				III
Test Voltage	1.6 kV	-	1.6 kV	2.5 kV
Pollution Degree				3

ORDER DATA (SPACING 3.5 MM)

Poles	Width (mm)	Article Designation	Article Number	PU
2	17.30	STL1550/2F-3.5-V-GREEN	51550026101E	100
3	20.80	STL1550/3F-3.5-V-GREEN	51550036101E	100
4	24.30	STL1550/4F-3.5-V-GREEN	51550046101E	100
5	27.80	STL1550/5F-3.5-V-GREEN	51550056101D	50
6	31.30	STL1550/6F-3.5-V-GREEN	51550066101D	50
7	34.80	STL1550/7F-3.5-V-GREEN	51550076101D	50
8	38.30	STL1550/8F-3.5-V-GREEN	51550086101D	50
9	41.80	STL1550/9F-3.5-V-GREEN	51550096101D	50
...	...	...	...	...
20	80.30	STL1550/20F-3.5-V-GREEN	51550206101D	50

ORDER DATA (SPACING 3.81 MM)

Poles	Width (mm)	Article Designation	Article Number	PU
2	18.01	STLZ1550/2F-3.81-V-GREEN	51550026125E	100
3	21.82	STLZ1550/3F-3.81-V-GREEN	51550036125E	100
4	25.63	STLZ1550/4F-3.81-V-GREEN	51550046125E	100
5	29.44	STLZ1550/5F-3.81-V-GREEN	51550056125D	50
6	33.25	STLZ1550/6F-3.81-V-GREEN	51550066125D	50
7	37.06	STLZ1550/7F-3.81-V-GREEN	51550076125D	50
8	40.87	STLZ1550/8F-3.81-V-GREEN	51550086125D	50
9	44.68	STLZ1550/9F-3.81-V-GREEN	51550096125D	50
...	...	...	...	...
20	86.59	STLZ1550/20F-3.81-V-GREEN	51550206125D	50

[1]Colours according to RAL, there may be variations on colour due to production conditions. Special colours on request.

Spacing 3.5 mm / Spacing 3.81 mm
Pin length 1.4 mm / 3.5 mm also available

STL1550/..F-3.5-V-P2.6-BK-HT
STLZ1550/..F-3.81-V-P2.6-BK-HT

NEW

WIRE SIZES	
solid min	-
solid max	-
stranded min	-
stranded max	-
stranded with ferrule min	-
stranded with ferrule max	-
DIMENSIONS	
Stripped Length	-
PCB Hole Diameter	1.2 mm
MATERIALS	
Thread Insert, Flange	Brass
Contact Pin	Copper Alloy
INSULATING MATERIAL	
Material	PA
Flammability Class	UL 94 V-0
TEMPERATURES	
Operating Temperature (without mech. load)	-40 °C - 105 °C
WAVE SOLDERING PROCESS	
Soldering Temperature, recommended	260 °C
Peak Soldering Time, recommended	3-4 s
REFLOW PROCESS	
Soldering Temperature, recommended	217 °C - 245 °C
Peak Soldering Time, recommended	60 s



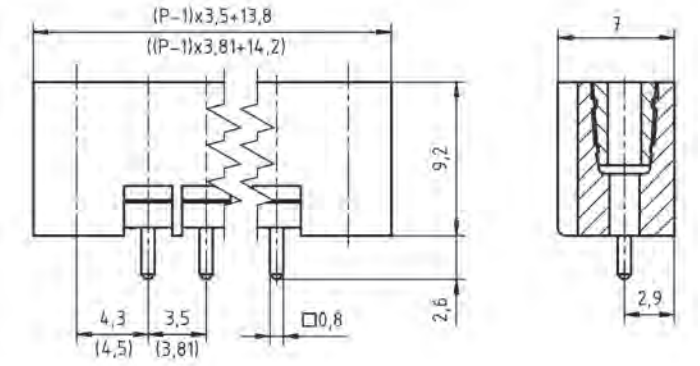

COLOURS[1]

BLACK, RAL 9011

COUNTERPARTS (SPACING 3.5 MM)

PCB Terminal Block

AK1550 AK1700 AK1710 AK4551 AK4561

COUNTERPARTS (SPACING 3.81 MM)

PCB Terminal Block

AKZ1550 AKZ1700 AKZ1710 AKZ4551 AKZ4561

ORDER DATA (SPACING 3.5 MM)

Poles	Width (mm)	Article Designation	Article Number	PU
2	17.70	STL1550/2F-3.5-V-P2.6-BK-HT	51550026336E	100
3	21.20	STL1550/3F-3.5-V-P2.6-BK-HT	51550036336E	100
4	24.70	STL1550/4F-3.5-V-P2.6-BK-HT	51550046336E	100
5	28.20	STL1550/5F-3.5-V-P2.6-BK-HT	51550056336D	50
6	31.70	STL1550/6F-3.5-V-P2.6-BK-HT	51550066336D	50
7	35.20	STL1550/7F-3.5-V-P2.6-BK-HT	51550076336D	50
8	38.70	STL1550/8F-3.5-V-P2.6-BK-HT	51550086336D	50
9	42.20	STL1550/9F-3.5-V-P2.6-BK-HT	51550096336D	50
...	...	...	...	...
12	52.70	STL1550/12F-3.5-V-P2.6-BK-HT	51550126336D	50

ORDER DATA (SPACING 3.81 MM)

Poles	Width (mm)	Article Designation	Article Number	PU
2	18.01	STLZ1550/2F-3.81-V-P2.6-BK-HT	51550026333E	100
3	21.82	STLZ1550/3F-3.81-V-P2.6-BK-HT	51550036333E	100
4	25.63	STLZ1550/4F-3.81-V-P2.6-BK-HT	51550046333E	100
5	29.44	STLZ1550/5F-3.81-V-P2.6-BK-HT	51550056333D	50
6	33.25	STLZ1550/6F-3.81-V-P2.6-BK-HT	51550066333D	50
7	37.06	STLZ1550/7F-3.81-V-P2.6-BK-HT	51550076333D	50
8	40.87	STLZ1550/8F-3.81-V-P2.6-BK-HT	51550086333D	50
9	44.68	STLZ1550/9F-3.81-V-P2.6-BK-HT	51550096333D	50
...	...	...	...	...
12	56.11	STLZ1550/12F-3.81-V-P2.6-BK-HT	51550126333D	50

ACCESSORIES

	Description	Article Number
	Coding Star CS1-3.5/3.81-NATURAL-HT	50000000022

RATINGS

	c UL us			VDE
Usegroup	B	C	D	
Rated Voltage	300 V	-	300 V	160 V
Rated Current	10 A	-	10 A	10 A
Overvoltage Category				III
Test Voltage	1.6 kV	-	1.6 kV	2.5 kV
Pollution Degree				3

[1]Colours according to RAL, there may be variations on colour due to production conditions.

L'IMPULSION
Retrouvez nous sur
www.limpulsion.fr

NEW

STL1550/..F-3.5-V-P2.6-BK-HT
STLZ1550/..F-3.81-V-P2.6-BK-HT

Spacing 3.5 mm / Spacing 3.81 mm
Pin length 1.4 mm / 3.5 mm also available



Technical Drawing see page 231

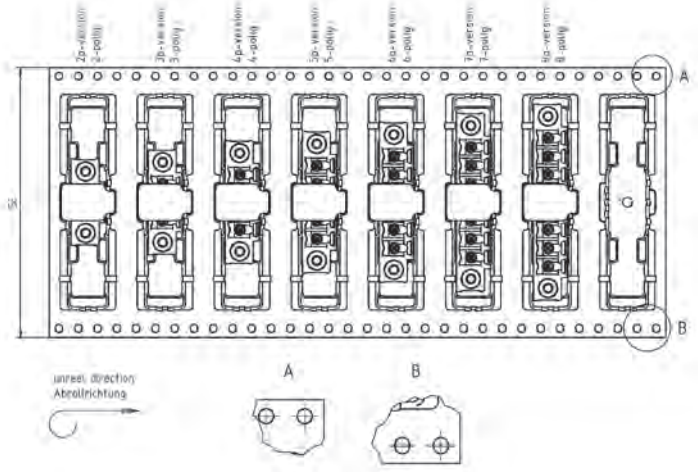

WIRE SIZES	
solid min	-
solid max	-
stranded min	-
stranded max	-
stranded with ferrule min	-
stranded with ferrule max	-
DIMENSIONS	
Stripped Length	-
PCB Hole Diameter	1.2 mm
MATERIALS	
Thread Insert, Flange	Brass
Contact Pin	Copper Alloy
INSULATING MATERIAL	
Material	PA
Flammability Class	UL 94 V-0
TEMPERATURES	
Operating Temperature (without mech. load)	-40 °C - 105 °C
WAVE SOLDERING PROCESS	
Soldering Temperature, recommended	260 °C
Peak Soldering Time, recommended	3-4 s
REFLOW PROCESS	
Soldering Temperature, recommended	217 °C - 245 °C
Peak Soldering Time, recommended	60 s

COLOURS[1]

BLACK, RAL 9011

COUNTERPARTS (SPACING 3.5 MM)

PCB Terminal Block

AK1550 AK1700 AK1710 AK4551 AK4561

COUNTERPARTS (SPACING 3.81 MM)

PCB Terminal Block

AKZ1550 AKZ1700 AKZ1710 AKZ4551 AKZ4561

ACCESSORIES

	Description	Article Number
	Coding Star CS1-3.5/3.81-NATURAL-HT	50000000022

TAPE-ON-REEL

Poles	Reel (RD/")	Width (R/mm)	Pitch (RP/mm)	Pieces (PCS)
2-8	13	56	16	200

RATINGS

	c UL us			VDE
Usegroup	B	C	D	
Rated Voltage	300 V	-	300 V	160 V
Rated Current	10 A	-	10 A	10 A
Overvoltage Category				III
Test Voltage	1.6 kV	-	1.6 kV	2.5 kV
Pollution Degree				3

ORDER DATA (SPACING 3.5 MM)

Poles	Width (mm)	Article Designation	Article Number	PU
2	17.70	STL1550/2F-3.5-V-P2.6-BK-HT	51550026336R	200
3	21.20	STL1550/3F-3.5-V-P2.6-BK-HT	51550036336R	200
4	24.70	STL1550/4F-3.5-V-P2.6-BK-HT	51550046336R	200
5	28.20	STL1550/5F-3.5-V-P2.6-BK-HT	51550056336R	200
6	31.70	STL1550/6F-3.5-V-P2.6-BK-HT	51550066336R	200
7	35.20	STL1550/7F-3.5-V-P2.6-BK-HT	51550076336R	200
8	38.70	STL1550/8F-3.5-V-P2.6-BK-HT	51550086336R	200

ORDER DATA (SPACING 3.81 MM)

Poles	Width (mm)	Article Designation	Article Number	PU
2	18.01	STLZ1550/2F-3.81-V-P2.6-BK-HT	51550026333R	200
3	21.82	STLZ1550/3F-3.81-V-P2.6-BK-HT	51550036333R	200
4	25.63	STLZ1550/4F-3.81-V-P2.6-BK-HT	51550046333R	200
5	29.44	STLZ1550/5F-3.81-V-P2.6-BK-HT	51550056333R	200
6	33.25	STLZ1550/6F-3.81-V-P2.6-BK-HT	51550066333R	200
7	37.06	STLZ1550/7F-3.81-V-P2.6-BK-HT	51550076333R	200
8	40.87	STLZ1550/8F-3.81-V-P2.6-BK-HT	51550086333R	200

[1]Colours according to RAL, there may be variations on colour due to production conditions.

Spacing 3.5 mm / Spacing 3.81 mm

STL1550/..G-3.5-H-GREEN
STLZ1550/..G-3.81-H-GREEN

WIRE SIZES	
solid min	-
solid max	-
stranded min	-
stranded max	-
stranded with ferrule min	-
stranded with ferrule max	-
DIMENSIONS	
Stripped Length	-
PCB Hole Diameter	1.2 mm
MATERIALS	
Contact Pin	Copper Alloy
INSULATING MATERIAL	
Material	PA 6.6
Flammability Class	UL 94 V-0
TEMPERATURES	
Operating Temperature (without mech. load)	-40 °C - 105 °C
WAVE SOLDERING PROCESS	
Soldering Temperature, recommended	260 °C
Peak Soldering Time, recommended	3-4 s
REFLOW PROCESS	
Soldering Temperature, recommended	-
Peak Soldering Time, recommended	-



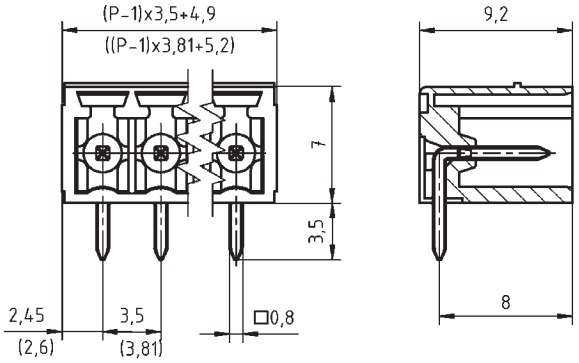

COLOURS[1]

GREEN, RAL 6018		BLACK, RAL 9011	
BASALT GREY, RAL 7012		LIGHT GREEN, similar RAL 6018	

COUNTERPARTS (SPACING 3.5 MM)

PCB Terminal Block

AK1550 AK1700 AK1710 AK4541 AK4551 AK4561

COUNTERPARTS (SPACING 3.81 MM)

PCB Terminal Block

AKZ1550 AKZ1700 AKZ1710 AKZ4551 AKZ4561

ORDER DATA (SPACING 3.5 MM)

Poles	Width (mm)	Article Designation	Article Number	PU
2	8.40	STL1550/2G-3.5-H-GREEN	51550025001F	200
3	11.90	STL1550/3G-3.5-H-GREEN	51550035001F	200
4	15.40	STL1550/4G-3.5-H-GREEN	51550045001F	200
5	18.90	STL1550/5G-3.5-H-GREEN	51550055001F	200
6	22.40	STL1550/6G-3.5-H-GREEN	51550065001E	100
7	25.90	STL1550/7G-3.5-H-GREEN	51550075001E	100
8	29.40	STL1550/8G-3.5-H-GREEN	51550085001D	50
9	32.90	STL1550/9G-3.5-H-GREEN	51550095001D	50
...	...	...	...	...
20	71.40	STL1550/20G-3.5-H-GREEN	51550205001D	50

ORDER DATA (SPACING 3.81 MM)

Poles	Width (mm)	Article Designation	Article Number	PU
2	9.01	STLZ1550/2G-3.81-H-GREEN	51550025025F	200
3	12.82	STLZ1550/3G-3.81-H-GREEN	51550035025F	200
4	16.63	STLZ1550/4G-3.81-H-GREEN	51550045025F	200
5	20.44	STLZ1550/5G-3.81-H-GREEN	51550055025F	200
6	24.25	STLZ1550/6G-3.81-H-GREEN	51550065025E	100
7	28.06	STLZ1550/7G-3.81-H-GREEN	51550075025E	100
8	31.87	STLZ1550/8G-3.81-H-GREEN	51550085025D	50
9	35.68	STLZ1550/9G-3.81-H-GREEN	51550095025D	50
...	...	...	...	...
20	77.59	STLZ1550/20G-3.81-H-GREEN	51550205025D	50

ACCESSORIES

	Description	Article Number
	Coding Star CS1-3.5/3.81-RED	50000000023
	Separating Element SE-STL1550-GREEN	51550000002

RATINGS

	cULus		VDE	
Usegroup	B	C	D	
Rated Voltage	300 V	-	300 V	160 V
Rated Current	10 A	-	10 A	10 A
Overvoltage Category				III
Test Voltage	1.6 kV	-	1.6 kV	2.5 kV
Pollution Degree				3

[1]Colours according to RAL, there may be variations on colour due to production conditions. Special colours on request.

L'IMPULSION
Retrouvez nous sur
www.limpulsion.fr

NEW

STL1550/..G-3.5-H-P2.6-BK-HT
STLZ1550/..G-3.81-H-P2.6-BK-HT

Spacing 3.5 mm / Spacing 3.81 mm
Pin length 1.4 mm / 3.5 mm also available



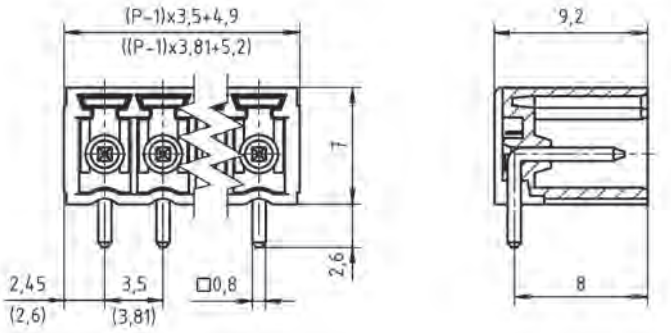

WIRE SIZES	
solid min	-
solid max	-
stranded min	-
stranded max	-
stranded with ferrule min	-
stranded with ferrule max	-
DIMENSIONS	
Stripped Length	-
PCB Hole Diameter	1.2 mm
MATERIALS	
Contact Pin	Copper Alloy
INSULATING MATERIAL	
Material	PA
Flammability Class	UL 94 V-0
TEMPERATURES	
Operating Temperature (without mech. load)	-40 °C - 105 °C
WAVE SOLDERING PROCESS	
Soldering Temperature, recommended	260 °C
Peak Soldering Time, recommended	3-4 s
REFLOW PROCESS	
Soldering Temperature, recommended	217 °C - 245 °C
Peak Soldering Time, recommended	60 s

COLOURS[1]

BLACK, RAL 9011

COUNTERPARTS (SPACING 3.5 MM)

PCB Terminal Block

AK1550 AK1700 AK1710 AK4541 AK4551 AK4561

COUNTERPARTS (SPACING 3.81 MM)

PCB Terminal Block

AKZ1550 AKZ1700 AKZ1710 AKZ4551 AKZ4561

ACCESSORIES

	Description	Article Number
	Coding Star CS1-3.5/3.81-NATURAL-HT	50000000022

ORDER DATA (SPACING 3.5 MM)

Poles	Width (mm)	Article Designation	Article Number	PU
2	8.40	STL1550/2G-3.5-H-P2.6-BK-HT	51550025333F	200
3	11.90	STL1550/3G-3.5-H-P2.6-BK-HT	51550035333F	200
4	15.40	STL1550/4G-3.5-H-P2.6-BK-HT	51550045333F	200
5	18.90	STL1550/5G-3.5-H-P2.6-BK-HT	51550055333F	200
6	22.40	STL1550/6G-3.5-H-P2.6-BK-HT	51550065333E	100
7	25.90	STL1550/7G-3.5-H-P2.6-BK-HT	51550075333E	100
8	29.40	STL1550/8G-3.5-H-P2.6-BK-HT	51550085333D	50
9	32.90	STL1550/9G-3.5-H-P2.6-BK-HT	51550095333D	50
...	...	...	...	...
12	43.40	STL1550/12G-3.5-H-P2.6-BK-HT	51550125333D	50

ORDER DATA (SPACING 3.81 MM)

Poles	Width (mm)	Article Designation	Article Number	PU
2	9.01	STLZ1550/2G-3.81-H-P2.6-BK-HT	51550025334F	200
3	12.82	STLZ1550/3G-3.81-H-P2.6-BK-HT	51550035334F	200
4	16.63	STLZ1550/4G-3.81-H-P2.6-BK-HT	51550045334F	200
5	20.44	STLZ1550/5G-3.81-H-P2.6-BK-HT	51550055334F	200
6	24.25	STLZ1550/6G-3.81-H-P2.6-BK-HT	51550065334E	100
7	28.06	STLZ1550/7G-3.81-H-P2.6-BK-HT	51550075334E	100
8	31.87	STLZ1550/8G-3.81-H-P2.6-BK-HT	51550085334D	50
9	35.68	STLZ1550/9G-3.81-H-P2.6-BK-HT	51550095334D	50
...	...	...	...	...
12	47.11	STLZ1550/12G-3.81-H-P2.6-BK-HT	51550125334D	50

RATINGS

	c UL us			VDE
Usegroup	B	C	D	
Rated Voltage	300 V	-	300 V	160 V
Rated Current	10 A	-	10 A	10 A
Overvoltage Category				III
Test Voltage	1.6 kV	-	1.6 kV	2.5 kV
Pollution Degree				3

[1]Colours according to RAL, there may be variations on colour due to production conditions.

Spacing 3.5 mm / Spacing 3.81 mm
Pin length 1.4 mm / 3.5 mm also available

STL1550/..G-3.5-H-P2.6-BK-HT
STLZ1550/..G-3.81-H-P2.6-BK-HT

NEW

WIRE SIZES	
solid min	-
solid max	-
stranded min	-
stranded max	-
stranded with ferrule min	-
stranded with ferrule max	-
DIMENSIONS	
Stripped Length	-
PCB Hole Diameter	1.2 mm
MATERIALS	
Contact Pin	Copper Alloy
INSULATING MATERIAL	
Material	PA
Flammability Class	UL 94 V-0
TEMPERATURES	
Operating Temperature (without mech. load)	-40 °C - 105 °C
WAVE SOLDERING PROCESS	
Soldering Temperature, recommended	260 °C
Peak Soldering Time, recommended	3-4 s
REFLOW PROCESS	
Soldering Temperature, recommended	217 °C - 245 °C
Peak Soldering Time, recommended	60 s



Technical Drawing see page 234

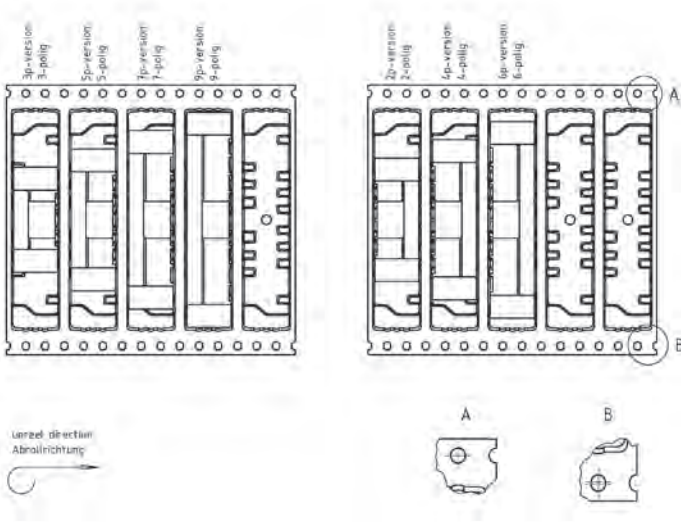

COLOURS[1]
BLACK, RAL 9011

COUNTERPARTS (SPACING 3.5 MM)
PCB Terminal Block
AK1550 AK1700 AK1710 AK4541 AK4551 AK4561

COUNTERPARTS (SPACING 3.81 MM)
PCB Terminal Block
AKZ1550 AKZ1700 AKZ1710 AKZ4551 AKZ4561

TAPE-ON-REEL

Poles	Reel (RD/")	Width (R/mm)	Pitch (RP/mm)	Pieces (PCS)
2-4	13	32	12	470
5-11	13	56	12	470

ACCESSORIES

	Description	Article Number
	Coding Star CS1-3.5/3.81-NATURAL-HT	50000000022

ORDER DATA (SPACING 3.5 MM)

Poles	Width (mm)	Article Designation	Article Number	PU
2	8.40	STL1550/2G-3.5-H-P2.6-BK-HT	51550025333R	470
3	11.90	STL1550/3G-3.5-H-P2.6-BK-HT	51550035333R	470
4	15.40	STL1550/4G-3.5-H-P2.6-BK-HT	51550045333R	470
5	18.90	STL1550/5G-3.5-H-P2.6-BK-HT	51550055333R	470
6	22.40	STL1550/6G-3.5-H-P2.6-BK-HT	51550065333R	470
7	25.90	STL1550/7G-3.5-H-P2.6-BK-HT	51550075333R	470
8	29.40	STL1550/8G-3.5-H-P2.6-BK-HT	51550085333R	470
9	32.90	STL1550/9G-3.5-H-P2.6-BK-HT	51550095333R	470
10	36.40	STL1550/10G-3.5-H-P2.6-BK-HT	51550105333R	470
11	39.90	STL1550/11G-3.5-H-P2.6-BK-HT	51550115333R	470

ORDER DATA (SPACING 3.81 MM)

Poles	Width (mm)	Article Designation	Article Number	PU
2	9.01	STLZ1550/2G-3.81-H-P2.6-BK-HT	51550025334R	470
3	12.82	STLZ1550/3G-3.81-H-P2.6-BK-HT	51550035334R	470
4	16.63	STLZ1550/4G-3.81-H-P2.6-BK-HT	51550045334R	470
5	20.44	STLZ1550/5G-3.81-H-P2.6-BK-HT	51550055334R	470
6	24.25	STLZ1550/6G-3.81-H-P2.6-BK-HT	51550065334R	470
7	28.06	STLZ1550/7G-3.81-H-P2.6-BK-HT	51550075334R	470
8	31.87	STLZ1550/8G-3.81-H-P2.6-BK-HT	51550085334R	470
9	35.68	STLZ1550/9G-3.81-H-P2.6-BK-HT	51550095334R	470
10	39.49	STLZ1550/10G-3.81-H-P2.6-BK-HT	51550105334R	470
11	43.30	STLZ1550/11G-3.81-H-P2.6-BK-HT	51550115334R	470

[1]Colours according to RAL, there may be variations on colour due to production conditions.

RATINGS

	c UL us			VDE
Usegroup	B	C	D	
Rated Voltage	300 V	-	300 V	160 V
Rated Current	10 A	-	10 A	10 A
Overvoltage Category				III
Test Voltage	1.6 kV	-	1.6 kV	2.5 kV
Pollution Degree				3

L'IMPULSION
Retrouvez nous sur
www.limpulsion.fr

STL1550/..F-3.5-H-GREEN
STLZ1550/..F-3.81-H-GREEN

Spacing 3.5 mm / Spacing 3.81 mm

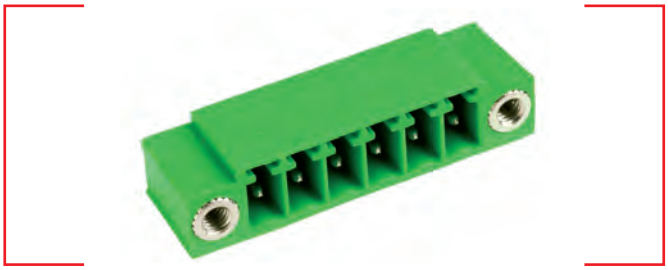

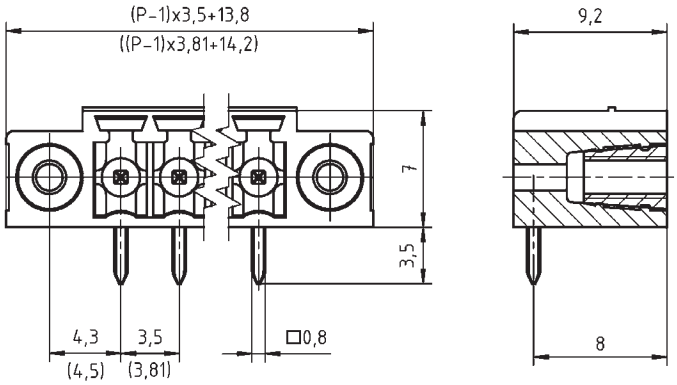

WIRE SIZES	
solid min	-
solid max	-
stranded min	-
stranded max	-
stranded with ferrule min	-
stranded with ferrule max	-
DIMENSIONS	
Stripped Length	-
PCB Hole Diameter	1.2 mm
MATERIALS	
Thread Insert, Flange	Brass
Contact Pin	Copper Alloy
INSULATING MATERIAL	
Material	PA 6.6
Flammability Class	UL 94 V-0
TEMPERATURES	
Operating Temperature (without mech. load)	-40 °C - 105 °C
WAVE SOLDERING PROCESS	
Soldering Temperature, recommended	260 °C
Peak Soldering Time, recommended	3-4 s
REFLOW PROCESS	
Soldering Temperature, recommended	-
Peak Soldering Time, recommended	-

COLOURS[1]

GREEN, RAL 6018	BLACK, RAL 9011
BASALT GREY, RAL 7012	LIGHT GREEN, similar RAL 6018

COUNTERPARTS (SPACING 3.5 MM)

PCB Terminal Block

AK1550 AK1700 AK1710 AK4551 AK4561

COUNTERPARTS (SPACING 3.81 MM)

PCB Terminal Block

AKZ1550 AKZ1700 AKZ1710 AKZ4551 AKZ4561

ACCESSORIES

	Description	Article Number
	Coding Star CS1-3.5/3.81-RED	50000000023
	Separating Element SE-STL1550-GREEN	51550000002

RATINGS

		c UL us		VDE
Usegroup	B	C	D	
Rated Voltage	300 V	-	300 V	160 V
Rated Current	10 A	-	10 A	10 A
Overvoltage Category				III
Test Voltage	1.6 kV	-	1.6 kV	2.5 kV
Pollution Degree				3

ORDER DATA (SPACING 3.5 MM)

Poles	Width (mm)	Article Designation	Article Number	PU
2	17.30	STL1550/2F-3.5-H-GREEN	51550026001E	100
3	20.80	STL1550/3F-3.5-H-GREEN	51550036001E	100
4	24.30	STL1550/4F-3.5-H-GREEN	51550046001E	100
5	27.80	STL1550/5F-3.5-H-GREEN	51550056001D	50
6	31.30	STL1550/6F-3.5-H-GREEN	51550066001D	50
7	34.80	STL1550/7F-3.5-H-GREEN	51550076001D	50
8	38.30	STL1550/8F-3.5-H-GREEN	51550086001D	50
9	41.80	STL1550/9F-3.5-H-GREEN	51550096001D	50
...	...	...	...	...
20	80.30	STL1550/20F-3.5-H-GREEN	51550206001D	50

ORDER DATA (SPACING 3.81 MM)

Poles	Width (mm)	Article Designation	Article Number	PU
2	18.01	STLZ1550/2F-3.81-H-GREEN	51550026025E	100
3	21.82	STLZ1550/3F-3.81-H-GREEN	51550036025E	100
4	25.63	STLZ1550/4F-3.81-H-GREEN	51550046025E	100
5	29.44	STLZ1550/5F-3.81-H-GREEN	51550056025D	50
6	33.25	STLZ1550/6F-3.81-H-GREEN	51550066025D	50
7	37.06	STLZ1550/7F-3.81-H-GREEN	51550076025D	50
8	40.87	STLZ1550/8F-3.81-H-GREEN	51550086025D	50
9	44.68	STLZ1550/9F-3.81-H-GREEN	51550096025D	50
...	...	...	...	...
20	86.59	STLZ1550/20F-3.81-H-GREEN	51550206025D	50

[1]Colours according to RAL, there may be variations on colour due to production conditions. Special colours on request.

Spacing 3.5 mm / Spacing 3.81 mm
Pin length 1.4 mm / 3.5 mm also available

STL1550/..F-3.5-H-P2.6-BK-HT
STLZ1550/..F-3.81-H-P2.6-BK-HT

NEW

WIRE SIZES	
solid min	-
solid max	-
stranded min	-
stranded max	-
stranded with ferrule min	-
stranded with ferrule max	-
DIMENSIONS	
Stripped Length	-
PCB Hole Diameter	1.2 mm
MATERIALS	
Thread Insert, Flange	Brass
Contact Pin	Copper Alloy
INSULATING MATERIAL	
Material	PA
Flammability Class	UL 94 V-0
TEMPERATURES	
Operating Temperature (without mech. load)	-40 °C - 105 °C
WAVE SOLDERING PROCESS	
Soldering Temperature, recommended	260 °C
Peak Soldering Time, recommended	3-4 s
REFLOW PROCESS	
Soldering Temperature, recommended	217 °C - 245 °C
Peak Soldering Time, recommended	60 s



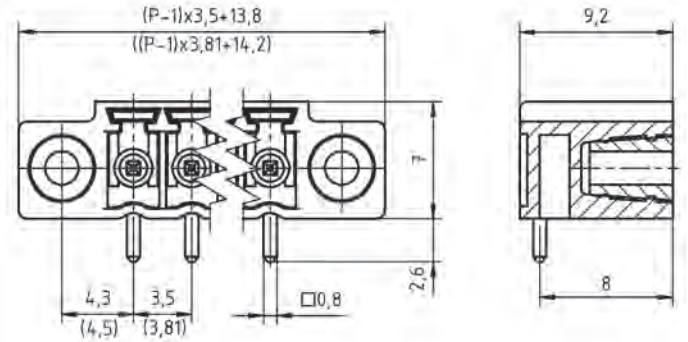

COLOURS[1]
BLACK, RAL 9011

COUNTERPARTS (SPACING 3.5 MM)
PCB Terminal Block
AK1550 AK1700 AK1710 AK4551 AK4561

COUNTERPARTS (SPACING 3.81 MM)
PCB Terminal Block
AKZ1550 AKZ1700 AKZ1710 AKZ4551 AKZ4561

ORDER DATA (SPACING 3.5 MM)

Poles	Width (mm)	Article Designation	Article Number	PU
2	17.70	STL1550/2F-3.5-H-P2.6-BK-HT	51550026343E	100
3	21.20	STL1550/3F-3.5-H-P2.6-BK-HT	51550036343E	100
4	24.70	STL1550/4F-3.5-H-P2.6-BK-HT	51550046343E	100
5	28.20	STL1550/5F-3.5-H-P2.6-BK-HT	51550056343D	50
6	31.70	STL1550/6F-3.5-H-P2.6-BK-HT	51550066343D	50
7	35.20	STL1550/7F-3.5-H-P2.6-BK-HT	51550076343D	50
8	38.70	STL1550/8F-3.5-H-P2.6-BK-HT	51550086343D	50
9	42.20	STL1550/9F-3.5-H-P2.6-BK-HT	51550096343D	50
...	...	...	...	...
12	52.70	STL1550/12F-3.5-H-P2.6-BK-HT	51550126343D	50

ORDER DATA (SPACING 3.81 MM)

Poles	Width (mm)	Article Designation	Article Number	PU
2	18.01	STLZ1550/2F-3.81-H-P2.6-BK-HT	51550026334E	100
3	21.82	STLZ1550/3F-3.81-H-P2.6-BK-HT	51550036334E	100
4	25.63	STLZ1550/4F-3.81-H-P2.6-BK-HT	51550046334E	100
5	29.44	STLZ1550/5F-3.81-H-P2.6-BK-HT	51550056334D	50
6	33.25	STLZ1550/6F-3.81-H-P2.6-BK-HT	51550066334D	50
7	37.06	STLZ1550/7F-3.81-H-P2.6-BK-HT	51550076334D	50
8	40.87	STLZ1550/8F-3.81-H-P2.6-BK-HT	51550086334D	50
9	44.68	STLZ1550/9F-3.81-H-P2.6-BK-HT	51550096334D	50
...	...	...	...	...
12	56.11	STLZ1550/12F-3.81-H-P2.6-BK-HT	51550126334D	50

ACCESSORIES

	Description	Article Number
	Coding Star CS1-3.5/3.81-NATURAL-HT	50000000022

RATINGS	c UL us			VDE
Usegroup	B	C	D	
Rated Voltage	300 V	-	300 V	160 V
Rated Current	10 A	-	10 A	10 A
Overvoltage Category				III
Test Voltage	1.6 kV	-	1.6 kV	2.5 kV
Pollution Degree				3

[1]Colours according to RAL, there may be variations on colour due to production conditions.

L'IMPULSION
Retrouvez nous sur
www.limpulsion.fr

NEW

STL1550/..F-3.5-H-P2.6-BK-HT
STLZ1550/..F-3.81-H-P2.6-BK-HT

Spacing 3.5 mm / Spacing 3.81 mm
Pin length 1.4 mm / 3.5 mm also available



Technical Drawing see page 237

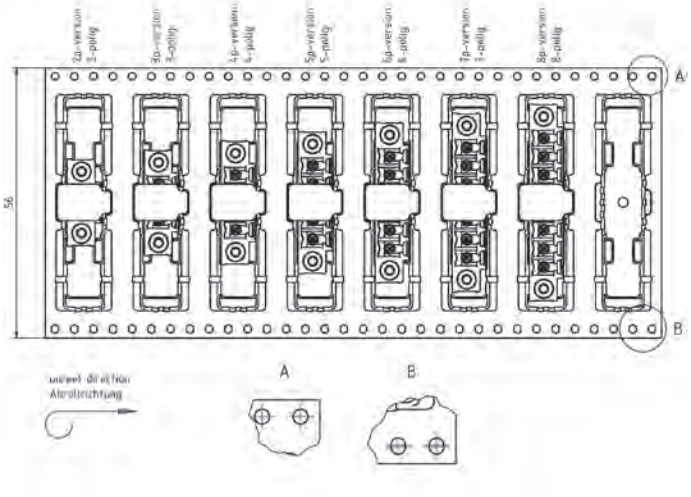

WIRE SIZES	
solid min	-
solid max	-
stranded min	-
stranded max	-
stranded with ferrule min	-
stranded with ferrule max	-
DIMENSIONS	
Stripped Length	-
PCB Hole Diameter	1.2 mm
MATERIALS	
Thread Insert, Flange	Brass
Contact Pin	Copper Alloy
INSULATING MATERIAL	
Material	PA
Flammability Class	UL 94 V-0
TEMPERATURES	
Operating Temperature (without mech. load)	-40 °C - 105 °C
WAVE SOLDERING PROCESS	
Soldering Temperature, recommended	260 °C
Peak Soldering Time, recommended	3-4 s
REFLOW PROCESS	
Soldering Temperature, recommended	217 °C - 245 °C
Peak Soldering Time, recommended	60 s

COLOURS[1]

BLACK, RAL 9011

COUNTERPARTS (SPACING 3.5 MM)

PCB Terminal Block

AK1550 AK1700 AK1710 AK4551 AK4561

COUNTERPARTS (SPACING 3.81 MM)

PCB Terminal Block

AKZ1550 AKZ1700 AKZ1710 AKZ4551 AKZ4561

ACCESSORIES

	Description	Article Number
	Coding Star CS1-3.5/3.81-NATURAL-HT	50000000022

TAPE-ON-REEL

Poles	Reel (RD/")	Width (R/mm)	Pitch (RP/mm)	Pieces (PCS)
2-8	13	56	12	470

RATINGS

	c UL us			VDE
Usegroup	B	C	D	
Rated Voltage	300 V	-	300 V	160 V
Rated Current	10 A	-	10 A	10 A
Overvoltage Category				III
Test Voltage	1.6 kV	-	1.6 kV	2.5 kV
Pollution Degree				3

ORDER DATA (SPACING 3.5 MM)

Poles	Width (mm)	Article Designation	Article Number	PU
2	17.70	STL1550/2F-3.5-H-P2.6-BK-HT	51550026343R	470
3	21.20	STL1550/3F-3.5-H-P2.6-BK-HT	51550036343R	470
4	24.70	STL1550/4F-3.5-H-P2.6-BK-HT	51550046343R	470
5	28.20	STL1550/5F-3.5-H-P2.6-BK-HT	51550056343R	470
6	31.70	STL1550/6F-3.5-H-P2.6-BK-HT	51550066343R	470
7	35.20	STL1550/7F-3.5-H-P2.6-BK-HT	51550076343R	470
8	38.70	STL1550/8F-3.5-H-P2.6-BK-HT	51550086343R	470

ORDER DATA (SPACING 3.81 MM)

Poles	Width (mm)	Article Designation	Article Number	PU
2	18.01	STLZ1550/2F-3.81-H-P2.6-BK-HT	51550026334R	470
3	21.82	STLZ1550/3F-3.81-H-P2.6-BK-HT	51550036334R	470
4	25.63	STLZ1550/4F-3.81-H-P2.6-BK-HT	51550046334R	470
5	29.44	STLZ1550/5F-3.81-H-P2.6-BK-HT	51550056334R	470
6	33.25	STLZ1550/6F-3.81-H-P2.6-BK-HT	51550066334R	470
7	37.06	STLZ1550/7F-3.81-H-P2.6-BK-HT	51550076334R	470
8	40.87	STLZ1550/8F-3.81-H-P2.6-BK-HT	51550086334R	470

[1]Colours according to RAL, there may be variations on colour due to production conditions.

Spacing 3.81 mm

STLZ1570/..G-3.81-V-GREEN

WIRE SIZES	
solid min	-
solid max	-
stranded min	-
stranded max	-
stranded with ferrule min	-
stranded with ferrule max	-
DIMENSIONS	
Stripped Length	-
PCB Hole Diameter	1.2 mm
MATERIALS	
Contact Pin	Copper Alloy
INSULATING MATERIAL	
Material	PBT
Flammability Class	UL 94 V-0
TEMPERATURES	
Operating Temperature (without mech. load)	-40 °C - 105 °C
WAVE SOLDERING PROCESS	
Soldering Temperature, recommended	260 °C
Peak Soldering Time, recommended	3-4 s
REFLOW PROCESS	
Soldering Temperature, recommended	-
Peak Soldering Time, recommended	-



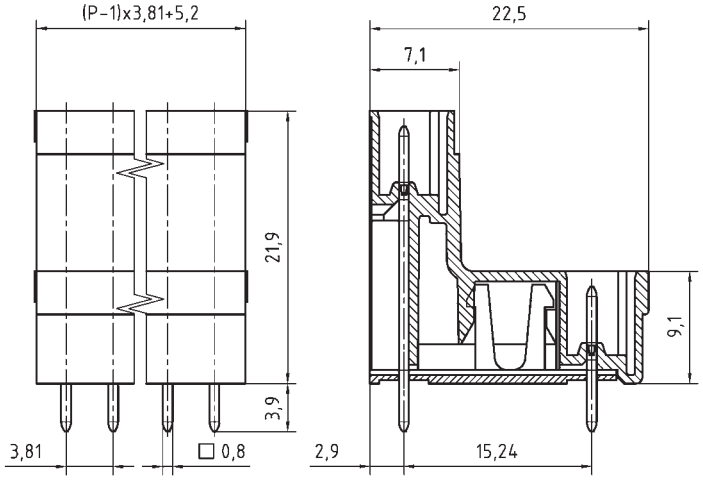

COLOURS[1]

GREEN, RAL 6018 — LIGHT GREEN, similar RAL 6018

COUNTERPARTS (SPACING 3.81 MM)

PCB Terminal Block

AKZ1550 AKZ1700 AKZ1710 AKZ4551 AKZ4561

ORDER DATA (SPACING 3.81 MM)

Poles	Width (mm)	Article Designation	Article Number	PU
2	9.01	STLZ1570/2G-3.81-V-GREEN	51570025121E	100
3	12.82	STLZ1570/3G-3.81-V-GREEN	51570035121E	100
4	16.63	STLZ1570/4G-3.81-V-GREEN	51570045121E	100
5	20.44	STLZ1570/5G-3.81-V-GREEN	51570055121E	100
6	24.25	STLZ1570/6G-3.81-V-GREEN	51570065121E	100
7	28.06	STLZ1570/7G-3.81-V-GREEN	51570075121D	50
8	31.87	STLZ1570/8G-3.81-V-GREEN	51570085121D	50
9	35.68	STLZ1570/9G-3.81-V-GREEN	51570095121D	50
10	39.49	STLZ1570/10G-3.81-V-GREEN	51570105121D	50
11	43.30	STLZ1570/11G-3.81-V-GREEN	51570115121D	50
12	47.11	STLZ1570/12G-3.81-V-GREEN	51570125121D	50
13	50.92	STLZ1570/13G-3.81-V-GREEN	51570135121D	50
14	54.73	STLZ1570/14G-3.81-V-GREEN	51570145121D	50
15	58.54	STLZ1570/15G-3.81-V-GREEN	51570155121D	50
16	62.35	STLZ1570/16G-3.81-V-GREEN	51570165121D	50
17	66.16	STLZ1570/17G-3.81-V-GREEN	51570175121D	50
18	69.97	STLZ1570/18G-3.81-V-GREEN	51570185121D	50
19	73.78	STLZ1570/19G-3.81-V-GREEN	51570195121D	50
20	77.59	STLZ1570/20G-3.81-V-GREEN	51570205121D	50

ACCESSORIES

	Description	Article Number
	Coding Star CS1-3.5/3.81-RED	50000000023
	Separating Element SE-STL1550-GREEN	51550000002

RATINGS

	c UL us		VDE	
Usegroup	B	C	D	
Rated Voltage	300 V	-	300 V	160 V
Rated Current	10 A	-	10 A	10 A
Overvoltage Category				III
Test Voltage	1.6 kV	-	1.6 kV	2.5 kV
Pollution Degree				3

[1]Colours according to RAL, there may be variations on colour due to production conditions. Special colours on request.

L'IMPULSION
Retrouvez nous sur
www.limpulsion.fr

STLZ1570/..G-3.81-H-GREEN

Spacing 3.81 mm



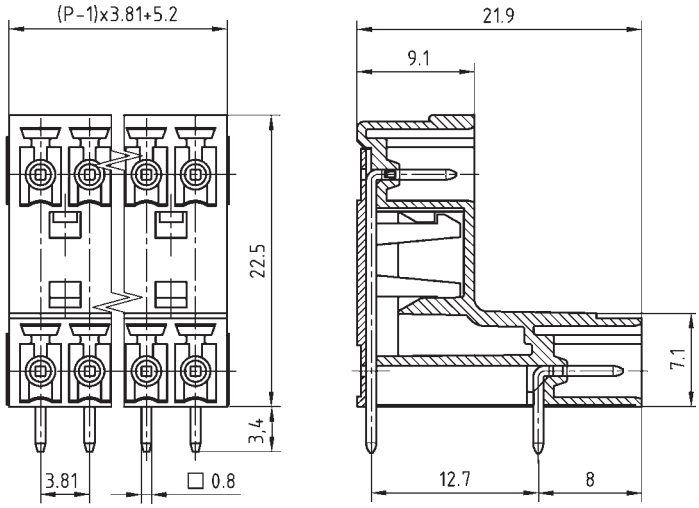

WIRE SIZES	
solid min	-
solid max	-
stranded min	-
stranded max	-
stranded with ferrule min	-
stranded with ferrule max	-
DIMENSIONS	
Stripped Length	-
PCB Hole Diameter	1.2 mm
MATERIALS	
Contact Pin	Copper Alloy
INSULATING MATERIAL	
Material	PBT
Flammability Class	UL 94 V-0
TEMPERATURES	
Operating Temperature (without mech. load)	-40 °C - 105 °C
WAVE SOLDERING PROCESS	
Soldering Temperature, recommended	260 °C
Peak Soldering Time, recommended	3-4 s
REFLOW PROCESS	
Soldering Temperature, recommended	-
Peak Soldering Time, recommended	-

COLOURS[1]

GREEN, RAL 6018

LIGHT GREEN, similar RAL 6018

COUNTERPARTS (SPACING 3.81 MM)

PCB Terminal Block

AKZ1550 AKZ1700 AKZ1710 AKZ4551 AKZ4561

ACCESSORIES

	Description	Article Number
	Coding Star CS1-3.5/3.81-RED	50000000023
	Separating Element SE-STL1550-GREEN	51550000002

ORDER DATA (SPACING 3.81 MM)

Poles	Width (mm)	Article Designation	Article Number	PU
2	9.01	STLZ1570/2G-3.81-H-GREEN	51570025021E	100
3	12.82	STLZ1570/3G-3.81-H-GREEN	51570035021E	100
4	16.63	STLZ1570/4G-3.81-H-GREEN	51570045021E	100
5	20.44	STLZ1570/5G-3.81-H-GREEN	51570055021E	100
6	24.25	STLZ1570/6G-3.81-H-GREEN	51570065021E	100
7	28.06	STLZ1570/7G-3.81-H-GREEN	51570075021D	50
8	31.87	STLZ1570/8G-3.81-H-GREEN	51570085021D	50
9	35.68	STLZ1570/9G-3.81-H-GREEN	51570095021D	50
10	39.49	STLZ1570/10G-3.81-H-GREEN	51570105021D	50
11	43.30	STLZ1570/11G-3.81-H-GREEN	51570115021D	50
12	47.11	STLZ1570/12G-3.81-H-GREEN	51570125021D	50
13	50.92	STLZ1570/13G-3.81-H-GREEN	51570135021D	50
14	54.73	STLZ1570/14G-3.81-H-GREEN	51570145021D	50
15	58.54	STLZ1570/15G-3.81-H-GREEN	51570155021D	50
16	62.35	STLZ1570/16G-3.81-H-GREEN	51570165021D	50
17	66.16	STLZ1570/17G-3.81-H-GREEN	51570175021D	50
18	69.97	STLZ1570/18G-3.81-H-GREEN	51570185021D	50
19	73.78	STLZ1570/19G-3.81-H-GREEN	51570195021D	50
20	77.59	STLZ1570/20G-3.81-H-GREEN	51570205021D	50

RATINGS

	c UL us			VDE
Usegroup	B	C	D	
Rated Voltage	300 V	-	300 V	160 V
Rated Current	10 A	-	10 A	10 A
Overvoltage Category				III
Test Voltage	1.6 kV	-	1.6 kV	2.5 kV
Pollution Degree				3

[1]Colours according to RAL, there may be variations on colour due to production conditions. Special colours on request.

Spacing 3.81 mm

STLZ1570/..F-3.81-V-GREEN

WIRE SIZES	
solid min	-
solid max	-
stranded min	-
stranded max	-
stranded with ferrule min	-
stranded with ferrule max	-
DIMENSIONS	
Stripped Length	-
PCB Hole Diameter	1.2 mm
MATERIALS	
Thread Insert, Flange	Brass
Contact Pin	Copper Alloy
INSULATING MATERIAL	
Material	PBT
Flammability Class	UL 94 V-0
TEMPERATURES	
Operating Temperature (without mech. load)	-40 °C - 105 °C
WAVE SOLDERING PROCESS	
Soldering Temperature, recommended	260 °C
Peak Soldering Time, recommended	3-4 s
REFLOW PROCESS	
Soldering Temperature, recommended	-
Peak Soldering Time, recommended	-



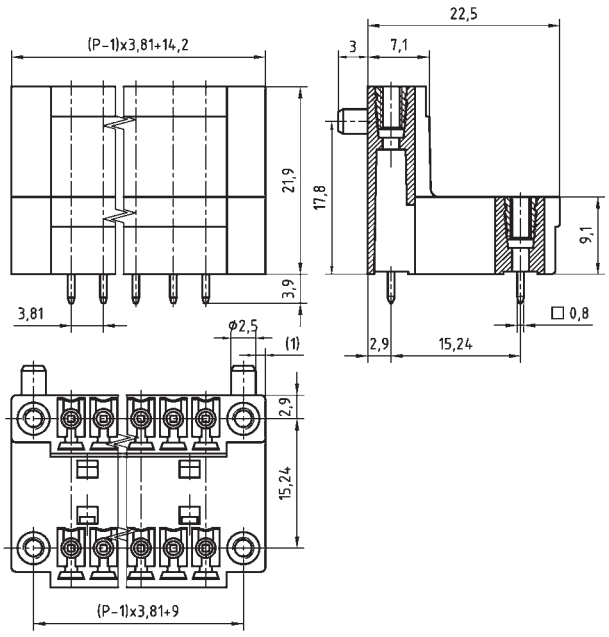

COLOURS[1]

GREEN, RAL 6018

LIGHT GREEN, similar RAL 6018

COUNTERPARTS (SPACING 3.81 MM)

PCB Terminal Block

AKZ1550 AKZ1700 AKZ1710 AKZ4551 AKZ4561

ORDER DATA (SPACING 3.81 MM)

Poles	Width (mm)	Article Designation	Article Number	PU
2	18.01	STLZ1570/2F-3.81-V-GREEN	51570026121D	50
3	21.82	STLZ1570/3F-3.81-V-GREEN	51570036121D	50
4	25.63	STLZ1570/4F-3.81-V-GREEN	51570046121D	50
5	29.44	STLZ1570/5F-3.81-V-GREEN	51570056121D	50
6	33.25	STLZ1570/6F-3.81-V-GREEN	51570066121D	50
7	37.06	STLZ1570/7F-3.81-V-GREEN	51570076121D	50
8	40.87	STLZ1570/8F-3.81-V-GREEN	51570086121D	50
9	44.68	STLZ1570/9F-3.81-V-GREEN	51570096121D	50
10	48.49	STLZ1570/10F-3.81-V-GREEN	51570106121D	50
11	52.30	STLZ1570/11F-3.81-V-GREEN	51570116121D	50
12	56.11	STLZ1570/12F-3.81-V-GREEN	51570126121D	50
13	59.92	STLZ1570/13F-3.81-V-GREEN	51570136121D	50
14	63.73	STLZ1570/14F-3.81-V-GREEN	51570146121D	50
15	67.54	STLZ1570/15F-3.81-V-GREEN	51570156121D	50
16	71.35	STLZ1570/16F-3.81-V-GREEN	51570166121D	50
17	75.16	STLZ1570/17F-3.81-V-GREEN	51570176121D	50
18	78.97	STLZ1570/18F-3.81-V-GREEN	51570186121D	50
19	82.78	STLZ1570/19F-3.81-V-GREEN	51570196121D	50
20	86.59	STLZ1570/20F-3.81-V-GREEN	51570206121D	50

ACCESSORIES

	Description	Article Number
	Coding Star CS1-3.5/3.81-RED	50000000023
	Separating Element SE-STL1550-GREEN	51550000002

RATINGS

	c UL us			VDE
Usegroup	B	C	D	
Rated Voltage	300 V	-	300 V	160 V
Rated Current	10 A	-	10 A	10 A
Overvoltage Category				III
Test Voltage	1.6 kV	-	1.6 kV	2.5 kV
Pollution Degree				3

[1]Colours according to RAL, there may be variations on colour due to production conditions. Special colours on request.

L'IMPULSION
Retrouvez nous sur
www.limpulsion.fr

STLZ1570/..F-3.81-H-GREEN

Spacing 3.81 mm



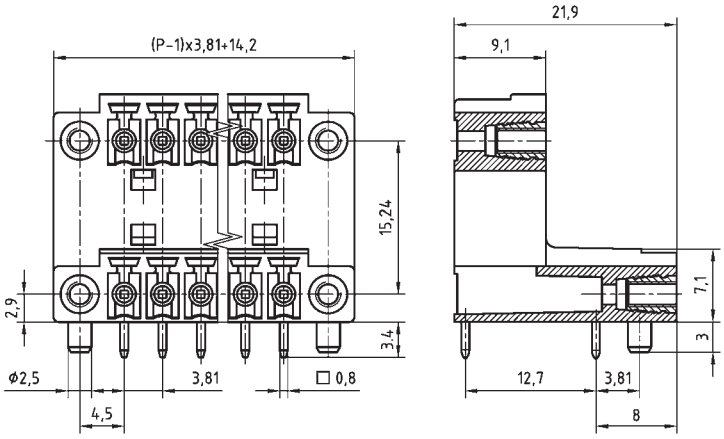

WIRE SIZES	
solid min	-
solid max	-
stranded min	-
stranded max	-
stranded with ferrule min	-
stranded with ferrule max	-
DIMENSIONS	
Stripped Length	-
PCB Hole Diameter	1.2 mm
MATERIALS	
Thread Insert, Flange	Brass
Contact Pin	Copper Alloy
INSULATING MATERIAL	
Material	PBT
Flammability Class	UL 94 V-0
TEMPERATURES	
Operating Temperature (without mech. load)	-40 °C - 105 °C
WAVE SOLDERING PROCESS	
Soldering Temperature, recommended	260 °C
Peak Soldering Time, recommended	3-4 s
REFLOW PROCESS	
Soldering Temperature, recommended	-
Peak Soldering Time, recommended	-

COLOURS[1]

GREEN, RAL 6018

LIGHT GREEN, similar RAL 6018

COUNTERPARTS (SPACING 3.81 MM)

PCB Terminal Block

AKZ1550 AKZ1700 AKZ1710 AKZ4551 AKZ4561

ACCESSORIES

	Description	Article Number
	Coding Star CS1-3.5/3.81-RED	50000000023
	Separating Element SE-STL1550-GREEN	51550000002

RATINGS

	c UL us		VDE	
Usegroup	B	C	D	
Rated Voltage	300 V	-	300 V	160 V
Rated Current	10 A	-	10 A	10 A
Overvoltage Category				III
Test Voltage	1.6 kV	-	1.6 kV	2.5 kV
Pollution Degree				3

ORDER DATA (SPACING 3.81 MM)

Poles	Width (mm)	Article Designation	Article Number	PU
2	18.01	STLZ1570/2F-3.81-H-GREEN	51570026021D	50
3	21.82	STLZ1570/3F-3.81-H-GREEN	51570036021D	50
4	25.63	STLZ1570/4F-3.81-H-GREEN	51570046021D	50
5	29.44	STLZ1570/5F-3.81-H-GREEN	51570056021D	50
6	33.25	STLZ1570/6F-3.81-H-GREEN	51570066021D	50
7	37.06	STLZ1570/7F-3.81-H-GREEN	51570076021D	50
8	40.87	STLZ1570/8F-3.81-H-GREEN	51570086021D	50
9	44.68	STLZ1570/9F-3.81-H-GREEN	51570096021D	50
10	48.49	STLZ1570/10F-3.81-H-GREEN	51570106021D	50
11	52.30	STLZ1570/11F-3.81-H-GREEN	51570116021D	50
12	56.11	STLZ1570/12F-3.81-H-GREEN	51570126021D	50
13	59.92	STLZ1570/13F-3.81-H-GREEN	51570136021D	50
14	63.73	STLZ1570/14F-3.81-H-GREEN	51570146021D	50
15	67.54	STLZ1570/15F-3.81-H-GREEN	51570156021D	50
16	71.35	STLZ1570/16F-3.81-H-GREEN	51570166021D	50
17	75.16	STLZ1570/17F-3.81-H-GREEN	51570176021D	50
18	78.97	STLZ1570/18F-3.81-H-GREEN	51570186021D	50
19	82.78	STLZ1570/19F-3.81-H-GREEN	51570196021D	50
20	86.59	STLZ1570/20F-3.81-H-GREEN	51570206021D	50

[1]Colours according to RAL, there may be variations on colour due to production conditions. Special colours on request.

Spacing 3.81 mm
Spacing 7.62 mm also available

STLZ1590/..G-3.81-GREEN

WIRE SIZES	
solid min	-
solid max	-
stranded min	-
stranded max	-
stranded with ferrule min	-
stranded with ferrule max	-
DIMENSIONS	
Stripped Length	-
PCB Hole Diameter	1.2 mm
MATERIALS	
Contact Pin	Copper Alloy
INSULATING MATERIAL	
Material	PBT
Flammability Class	UL 94 V-0
TEMPERATURES	
Operating Temperature (without mech. load)	-40 °C - 105 °C
WAVE SOLDERING PROCESS	
Soldering Temperature, recommended	260 °C
Peak Soldering Time, recommended	3-4 s
REFLOW PROCESS	
Soldering Temperature, recommended	-
Peak Soldering Time, recommended	-



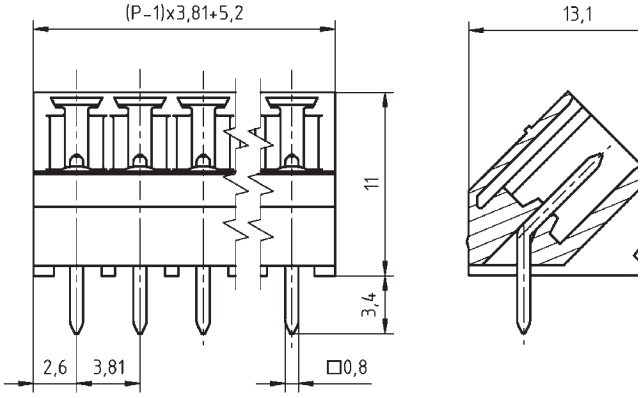

COLOURS[1]

GREEN, RAL 6018 — LIGHT GREEN, similar RAL 6018

COUNTERPARTS (SPACING 3.81 MM)

PCB Terminal Block

AKZ1550 AKZ1700 AKZ1710 AKZ4551 AKZ4561

ORDER DATA (SPACING 3.81 MM)

Poles	Width (mm)	Article Designation	Article Number	PU
2	9.01	STLZ1590/2G-3.81-GREEN	51590025121F	200
3	12.82	STLZ1590/3G-3.81-GREEN	51590035121F	200
4	16.63	STLZ1590/4G-3.81-GREEN	51590045121F	200
5	20.44	STLZ1590/5G-3.81-GREEN	51590055121F	200
6	24.25	STLZ1590/6G-3.81-GREEN	51590065121E	100
7	28.06	STLZ1590/7G-3.81-GREEN	51590075121E	100
8	31.87	STLZ1590/8G-3.81-GREEN	51590085121D	50
9	35.68	STLZ1590/9G-3.81-GREEN	51590095121D	50
10	39.49	STLZ1590/10G-3.81-GREEN	51590105121D	50
11	43.30	STLZ1590/11G-3.81-GREEN	51590115121D	50
12	47.11	STLZ1590/12G-3.81-GREEN	51590125121D	50
13	50.92	STLZ1590/13G-3.81-GREEN	51590135121D	50
14	54.73	STLZ1590/14G-3.81-GREEN	51590145121D	50
15	58.54	STLZ1590/15G-3.81-GREEN	51590155121D	50
16	62.35	STLZ1590/16G-3.81-GREEN	51590165121D	50
17	66.16	STLZ1590/17G-3.81-GREEN	51590175121D	50
18	69.97	STLZ1590/18G-3.81-GREEN	51590185121D	50
19	73.78	STLZ1590/19G-3.81-GREEN	51590195121D	50
20	77.59	STLZ1590/20G-3.81-GREEN	51590205121D	50

ACCESSORIES

	Description	Article Number
	Coding Star CS1-3.5/3.81-RED	50000000023
	Separating Element SE-STL1550-GREEN	51550000002

RATINGS

	cULus		VDE	
Usegroup	B	C	D	
Rated Voltage	300 V	-	300 V	160 V
Rated Current	10 A	-	10 A	10 A
Overvoltage Category				III
Test Voltage	1.6 kV	-	1.6 kV	2.5 kV
Pollution Degree				3

[1]Colours according to RAL, there may be variations on colour due to production conditions. Special colours on request.

L'IMPULSION
Retrouvez nous sur
www.limpulsion.fr

NEW

STL1541/..G-3.5-V-BASALTGREY

Spacing 3.5 mm



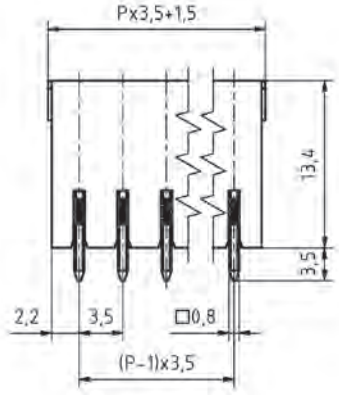

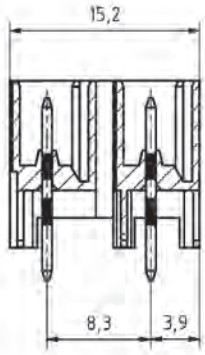

WIRE SIZES	
solid min	-
solid max	-
stranded min	-
stranded max	-
stranded with ferrule min	-
stranded with ferrule max	-
DIMENSIONS	
Stripped Length	-
PCB Hole Diameter	1.2 mm
MATERIALS	
Contact Pin	Copper Alloy
INSULATING MATERIAL	
Material	LCP
Flammability Class	UL 94 V-0
TEMPERATURES	
Operating Temperature (without mech. load)	-40 °C - 105 °C
WAVE SOLDERING PROCESS	
Soldering Temperature, recommended	260 °C
Peak Soldering Time, recommended	3-4 s
REFLOW PROCESS	
Soldering Temperature, recommended	-
Peak Soldering Time, recommended	-

COLOURS[1]			
	BASALT GREY, RAL 7012		GREEN, RAL 6018
	LIGHT GREY, RAL 7035		

COUNTERPARTS (SPACING 3.5 MM)
PCB Terminal Block
AK4541

ORDER DATA (SPACING 3.5 MM)

Poles	Width (mm)	Article Designation	Article Number	PU
2	7.90	STL1541/2G-3.5-V-BASALTGREY	51541025101E	100
3	11.40	STL1541/3G-3.5-V-BASALTGREY	51541035101E	100
4	14.90	STL1541/4G-3.5-V-BASALTGREY	51541045101E	100
5	18.40	STL1541/5G-3.5-V-BASALTGREY	51541055101E	100
6	21.90	STL1541/6G-3.5-V-BASALTGREY	51541065101D	50
7	25.40	STL1541/7G-3.5-V-BASALTGREY	51541075101D	50
8	28.90	STL1541/8G-3.5-V-BASALTGREY	51541085101D	50
9	32.40	STL1541/9G-3.5-V-BASALTGREY	51541095101D	50
10	35.90	STL1541/10G-3.5-V-BASALTGREY	51541105101D	50
11	39.40	STL1541/11G-3.5-V-BASALTGREY	51541115101D	50
12	42.90	STL1541/12G-3.5-V-BASALTGREY	51541125101D	50
13	46.40	STL1541/13G-3.5-V-BASALTGREY	51541135101D	50
14	49.90	STL1541/14G-3.5-V-BASALTGREY	51541145101D	50
15	53.40	STL1541/15G-3.5-V-BASALTGREY	51541155101D	50
16	56.90	STL1541/16G-3.5-V-BASALTGREY	51541165101D	50
17	60.40	STL1541/17G-3.5-V-BASALTGREY	51541175101D	50
18	63.90	STL1541/18G-3.5-V-BASALTGREY	51541185101D	50
19	67.40	STL1541/19G-3.5-V-BASALTGREY	51541195101D	50
20	70.90	STL1541/20G-3.5-V-BASALTGREY	51541205101D	50

RATINGS		c UL us *		VDE *
Usegroup	B	C	D	
Rated Voltage	300 V	-	300 V	160 V
Rated Current	10 A	-	10 A	10 A
Overvoltage Category				III
Test Voltage	1.6 kV	-	1.6 kV	2.5 kV
Pollution Degree				3
				* Approval Pending

[1]Colours according to RAL, there may be variations on colour due to production conditions. Special colours on request.

Spacing 3.5 mm
With screw flange also available

STL1541/..FR-3.5-V-BASALTGREY

NEW

WIRE SIZES	
solid min	-
solid max	-
stranded min	-
stranded max	-
stranded with ferrule min	-
stranded with ferrule max	-
DIMENSIONS	
Stripped Length	-
PCB Hole Diameter	1.2 mm
MATERIALS	
Thread Insert, Flange	Brass
Contact Pin	Copper Alloy
INSULATING MATERIAL	
Material	LCP
Flammability Class	UL 94 V-0
TEMPERATURES	
Operating Temperature (without mech. load)	-40 °C - 105 °C
WAVE SOLDERING PROCESS	
Soldering Temperature, recommended	260 °C
Peak Soldering Time, recommended	3-4 s
REFLOW PROCESS	
Soldering Temperature, recommended	-
Peak Soldering Time, recommended	-



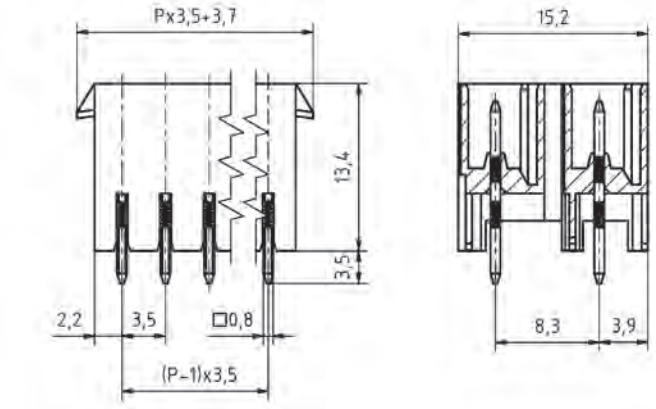

COLOURS[1]			
BASALT GREY, RAL 7012		GREEN, RAL 6018	
LIGHT GREY, RAL 7035			

COUNTERPARTS (SPACING 3.5 MM)
PCB Terminal Block
AK4541

ORDER DATA (SPACING 3.5 MM)

Poles	Width (mm)	Article Designation	Article Number	PU
2	10.70	STL1541/2FR-3.5-V-BASALTGREY	51541026101E	100
3	14.20	STL1541/3FR-3.5-V-BASALTGREY	51541036101E	100
4	17.70	STL1541/4FR-3.5-V-BASALTGREY	51541046101E	100
5	21.20	STL1541/5FR-3.5-V-BASALTGREY	51541056101E	100
6	24.70	STL1541/6FR-3.5-V-BASALTGREY	51541066101D	50
7	28.20	STL1541/7FR-3.5-V-BASALTGREY	51541076101D	50
8	31.70	STL1541/8FR-3.5-V-BASALTGREY	51541086101D	50
9	35.20	STL1541/9FR-3.5-V-BASALTGREY	51541096101D	50
10	38.70	STL1541/10FR-3.5-V-BASALTGREY	51541106101D	50
11	42.20	STL1541/11FR-3.5-V-BASALTGREY	51541116101D	50
12	45.70	STL1541/12FR-3.5-V-BASALTGREY	51541126101D	50
13	49.20	STL1541/13FR-3.5-V-BASALTGREY	51541136101D	50
14	52.70	STL1541/14FR-3.5-V-BASALTGREY	51541146101D	50
15	56.20	STL1541/15FR-3.5-V-BASALTGREY	51541156101D	50
16	59.70	STL1541/16FR-3.5-V-BASALTGREY	51541166101D	50
17	63.20	STL1541/17FR-3.5-V-BASALTGREY	51541176101D	50
18	66.70	STL1541/18FR-3.5-V-BASALTGREY	51541186101D	50
19	70.20	STL1541/19FR-3.5-V-BASALTGREY	51541196101D	50
20	73.70	STL1541/20FR-3.5-V-BASALTGREY	51541206101D	50

RATINGS	c UL us			VDE *
Usegroup	B	C	D	
Rated Voltage	300 V	-	300 V	160 V
Rated Current	10 A	-	10 A	10 A
Overvoltage Category				III
Test Voltage	1.6 kV	-	1.6 kV	2.5 kV
Pollution Degree				3

* Approval Pending

[1]Colours according to RAL, there may be variations on colour due to production conditions. Special colours on request.

L'IMPULSION
Retrouvez nous sur
www.limpulsion.fr

NEW

STL1541/..G-3.5-H-BASALTGREY

Spacing 3.5 mm



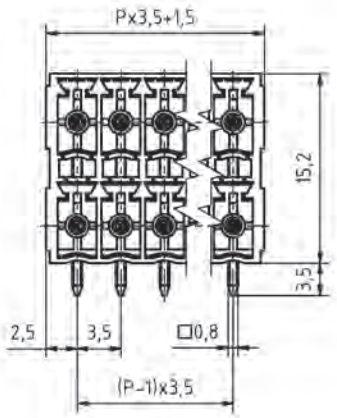

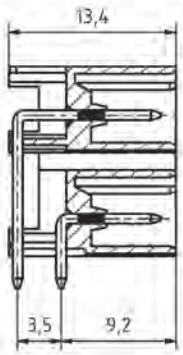

WIRE SIZES	
solid min	-
solid max	-
stranded min	-
stranded max	-
stranded with ferrule min	-
stranded with ferrule max	-
DIMENSIONS	
Stripped Length	-
PCB Hole Diameter	1.2 mm
MATERIALS	
Contact Pin	Copper Alloy
INSULATING MATERIAL	
Material	LCP
Flammability Class	UL 94 V-0
TEMPERATURES	
Operating Temperature (without mech. load)	-40 °C - 105 °C
WAVE SOLDERING PROCESS	
Soldering Temperature, recommended	260 °C
Peak Soldering Time, recommended	3-4 s
REFLOW PROCESS	
Soldering Temperature, recommended	-
Peak Soldering Time, recommended	-

COLOURS[1]

■	BASALT GREY, RAL 7012	■	GREEN, RAL 6018
■	LIGHT GREEN, similar RAL 6018		

COUNTERPARTS (SPACING 3.5 MM)

PCB Terminal Block
AK4541

ORDER DATA (SPACING 3.5 MM)

Poles	Width (mm)	Article Designation	Article Number	VPE
2	8.50	STL1541/2G-3.5-H-BASALTGREY	51541025001E	100
3	12.00	STL1541/3G-3.5-H-BASALTGREY	51541035001E	100
4	15.50	STL1541/4G-3.5-H-BASALTGREY	51541045001E	100
5	19.00	STL1541/5G-3.5-H-BASALTGREY	51541055001E	100
6	22.50	STL1541/6G-3.5-H-BASALTGREY	51541065001D	50
7	26.00	STL1541/7G-3.5-H-BASALTGREY	51541075001D	50
8	29.50	STL1541/8G-3.5-H-BASALTGREY	51541085001D	50
9	33.00	STL1541/9G-3.5-H-BASALTGREY	51541095001D	50
10	36.50	STL1541/10G-3.5-H-BASALTGREY	51541105001D	50
11	40.00	STL1541/11G-3.5-H-BASALTGREY	51541115001D	50
12	43.50	STL1541/12G-3.5-H-BASALTGREY	51541125001D	50
13	47.00	STL1541/13G-3.5-H-BASALTGREY	51541135001D	50
14	50.50	STL1541/14G-3.5-H-BASALTGREY	51541145001D	50
15	54.00	STL1541/15G-3.5-H-BASALTGREY	51541155001D	50
16	57.50	STL1541/16G-3.5-H-BASALTGREY	51541165001D	50
17	61.00	STL1541/17G-3.5-H-BASALTGREY	51541175001D	50
18	64.50	STL1541/18G-3.5-H-BASALTGREY	51541185001D	50
19	68.00	STL1541/19G-3.5-H-BASALTGREY	51541195001D	50
20	71.50	STL1541/20G-3.5-H-BASALTGREY	51541205001D	50

RATINGS		c UL us *		VDE *
Usegroup	B	C	D	
Rated Voltage	300 V	-	300 V	160 V
Rated Current	10 A	-	10 A	10 A
Overvoltage Category				III
Test Voltage	1.6 kV	-	1.6 kV	2.5 kV
Pollution Degree				3

* Approval Pending

[1]Colours according to RAL, there may be variations on colour due to production conditions. Special colours on request.

Spacing 3.5 mm
With screw flange also available

STL1541/..FR-3.5-H-BASALTGREY

NEW

WIRE SIZES	
solid min	-
solid max	-
stranded min	-
stranded max	-
stranded with ferrule min	-
stranded with ferrule max	-
DIMENSIONS	
Stripped Length	-
PCB Hole Diameter	1.2 mm
MATERIALS	
Thread Insert, Flange	Brass
Contact Pin	Copper Alloy
INSULATING MATERIAL	
Material	LCP
Flammability Class	UL 94 V-0
TEMPERATURES	
Operating Temperature (without mech. load)	-40 °C - 105 °C
WAVE SOLDERING PROCESS	
Soldering Temperature, recommended	260 °C
Peak Soldering Time, recommended	3-4 s
REFLOW PROCESS	
Soldering Temperature, recommended	-
Peak Soldering Time, recommended	-



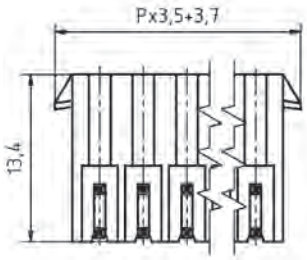

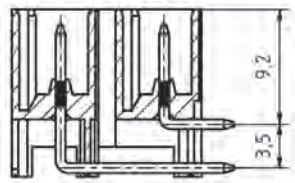

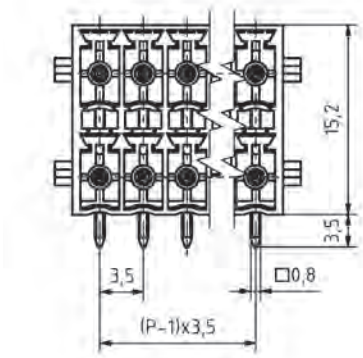

COLOURS[1]			
	BASALT GREY, RAL 7012		GREEN, RAL 6018
	LIGHT GREEN, similar RAL 6018		

COUNTERPARTS (SPACING 3.5 MM)
PCB Terminal Block
AK4541

ORDER DATA (SPACING 3.5 MM)

Poles	Width (mm)	Article Designation	Article Number	VPE
2	11.30	STL1541/2FR-3.5-H-BASALTGREY	51541026001D	100
3	14.80	STL1541/3FR-3.5-H-BASALTGREY	51541036001D	100
4	18.30	STL1541/4FR-3.5-H-BASALTGREY	51541046001D	100
5	21.80	STL1541/5FR-3.5-H-BASALTGREY	51541056001D	100
6	25.30	STL1541/6FR-3.5-H-BASALTGREY	51541066001D	50
7	28.80	STL1541/7FR-3.5-H-BASALTGREY	51541076001D	50
8	32.30	STL1541/8FR-3.5-H-BASALTGREY	51541086001D	50
9	35.80	STL1541/9FR-3.5-H-BASALTGREY	51541096001D	50
10	39.30	STL1541/10FR-3.5-H-BASALTGREY	51541106001D	50
11	42.80	STL1541/11FR-3.5-H-BASALTGREY	51541116001D	50
12	46.30	STL1541/12FR-3.5-H-BASALTGREY	51541126001D	50
13	49.80	STL1541/13FR-3.5-H-BASALTGREY	51541136001D	50
14	53.30	STL1541/14FR-3.5-H-BASALTGREY	51541146001D	50
15	56.80	STL1541/15FR-3.5-H-BASALTGREY	51541156001D	50
16	60.30	STL1541/16FR-3.5-H-BASALTGREY	51541166001D	50
17	63.80	STL1541/17FR-3.5-H-BASALTGREY	51541176001D	50
18	67.30	STL1541/18FR-3.5-H-BASALTGREY	51541186001D	50
19	70.80	STL1541/19FR-3.5-H-BASALTGREY	51541196001D	50
20	74.30	STL1541/20FR-3.5-H-BASALTGREY	51541206001D	50

RATINGS	c UL us *			VDE *
Usegroup	B	C	D	
Rated Voltage	300 V	-	300 V	160 V
Rated Current	10 A	-	10 A	10 A
Overvoltage Category				III
Test Voltage	1.6 kV	-	1.6 kV	2.5 kV
Pollution Degree				3

* Approval Pending

[1]Colours according to RAL, there may be variations on colour due to production conditions. Special colours on request.

L'IMPULSION
Retrouvez nous sur
www.limpulsion.fr

NEW

STLZ1520/..G-5.08-V-GREEN

Spacing 5.08 mm



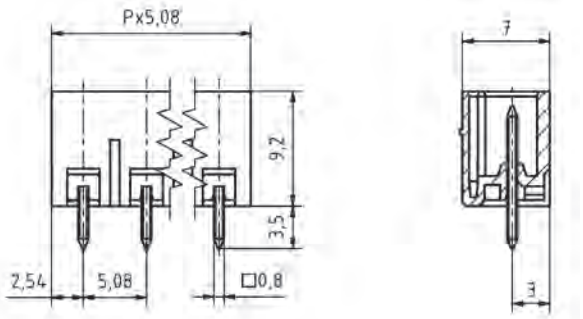

WIRE SIZES	
solid min	-
solid max	-
stranded min	-
stranded max	-
stranded with ferrule min	-
stranded with ferrule max	-
DIMENSIONS	
Stripped Length	-
PCB Hole Diameter	1.2 mm
MATERIALS	
Contact Pin	Copper Alloy
INSULATING MATERIAL	
Material	PA 6.6
Flammability Class	UL 94 V-0
TEMPERATURES	
Operating Temperature (without mech. load)	-40 °C - 105 °C
WAVE SOLDERING PROCESS	
Soldering Temperature, recommended	260 °C
Peak Soldering Time, recommended	3-4 s
REFLOW PROCESS	
Soldering Temperature, recommended	-
Peak Soldering Time, recommended	-

COLOURS[1]

	GREEN, RAL 6018		BASALT GREY, RAL 7012
	LIGHT GREEN, similar RAL 6018		BLACK, RAL 9011

COUNTERPARTS (SPACING 5.08 MM)

PCB Terminal Block
AKZ1520

ACCESSORIES

	Description	Article Number
	Coding Star CS1-5.0/5.08-RED	50000000021

ORDER DATA (SPACING 5.08 MM)

Poles	Width (mm)	Article Designation	Article Number	PU
2	10.16	STLZ1520/2G-5.08-V-GREEN	51520025125F	200
3	15.24	STLZ1520/3G-5.08-V-GREEN	51520035125F	200
4	20.32	STLZ1520/4G-5.08-V-GREEN	51520045125F	200
5	25.40	STLZ1520/5G-5.08-V-GREEN	51520055125E	100
6	30.48	STLZ1520/6G-5.08-V-GREEN	51520065125D	50
7	35.56	STLZ1520/7G-5.08-V-GREEN	51520075125D	50
8	40.64	STLZ1520/8G-5.08-V-GREEN	51520085125D	50
9	45.72	STLZ1520/9G-5.08-V-GREEN	51520095125D	50
10	50.80	STLZ1520/10G-5.08-V-GREEN	51520105125D	50
11	55.88	STLZ1520/11G-5.08-V-GREEN	51520115125D	50
12	60.96	STLZ1520/12G-5.08-V-GREEN	51520125125D	50

RATINGS

		c UL us *		VDE *
Usegroup	B	C	D	
Rated Voltage	300 V	-	300 V	250 V
Rated Current	8 A	-	8 A	8 A
Overvoltage Category				III
Test Voltage	1.6 kV	-	1.6 kV	4.0 kV
Pollution Degree				3

* Approval Pending

[1]Colours according to RAL, there may be variations on colour due to production conditions. Special colours on request.

Spacing 5.08 mm

STLZ1520/..F-5.08-V-GREEN

NEW

WIRE SIZES	
solid min	-
solid max	-
stranded min	-
stranded max	-
stranded with ferrule min	-
stranded with ferrule max	-
DIMENSIONS	
Stripped Length	-
PCB Hole Diameter	1.2 mm
MATERIALS	
Thread Insert, Flange	Brass
Contact Pin	Copper Alloy
INSULATING MATERIAL	
Material	PA 6.6
Flammability Class	UL 94 V-0
TEMPERATURES	
Operating Temperature (without mech. load)	-40 °C - 105 °C
WAVE SOLDERING PROCESS	
Soldering Temperature, recommended	260 °C
Peak Soldering Time, recommended	3-4 s
REFLOW PROCESS	
Soldering Temperature, recommended	-
Peak Soldering Time, recommended	-



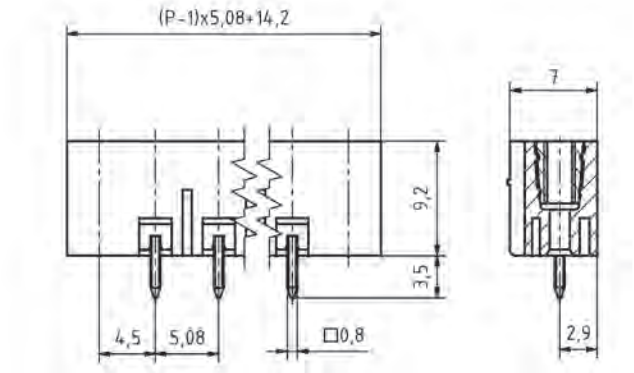

COLOURS[1]

	GREEN, RAL 6018		BASALT GREY, RAL 7012
	LIGHT GREEN, similar RAL 6018		BLACK, RAL 9011

COUNTERPARTS (SPACING 5.08 MM)

PCB Terminal Block

AKZ1520

ORDER DATA (SPACING 5.08 MM)

Poles	Width (mm)	Article Designation	Article Number	PU
2	14.08	STLZ1520/2F-5.08-V-GREEN	51520026125F	200
3	19.16	STLZ1520/3F-5.08-V-GREEN	51520036125F	200
4	24.24	STLZ1520/4F-5.08-V-GREEN	51520046125F	200
5	29.32	STLZ1520/5F-5.08-V-GREEN	51520056125E	100
6	34.40	STLZ1520/6F-5.08-V-GREEN	51520066125D	50
7	39.48	STLZ1520/7F-5.08-V-GREEN	51520076125D	50
8	44.56	STLZ1520/8F-5.08-V-GREEN	51520086125D	50
9	49.64	STLZ1520/9F-5.08-V-GREEN	51520096125D	50
10	54.72	STLZ1520/10F-5.08-V-GREEN	51520106125D	50
11	59.80	STLZ1520/11F-5.08-V-GREEN	51520116125D	50
12	64.88	STLZ1520/12F-5.08-V-GREEN	51520126125D	50

ACCESSORIES

	Description	Article Number
	Coding Star CS1-5.0/5.08-RED	50000000021

RATINGS

	c UL us *			VDE *
Usegroup	B	C	D	
Rated Voltage	300 V	-	300 V	250 V
Rated Current	8 A	-	8 A	8 A
Overvoltage Category				III
Test Voltage	1.6 kV	-	1.6 kV	4.0 kV
Pollution Degree				3

* Approval Pending

[1]Colours according to RAL, there may be variations on colour due to production conditions. Special colours on request.

L'IMPULSION
Retrouvez nous sur
www.limpulsion.fr

NEW

STLZ1520/..G-5.08-H-GREEN

Spacing 5.08 mm



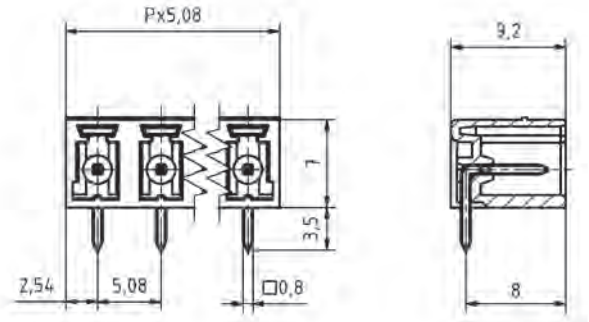

WIRE SIZES	
solid min	-
solid max	-
stranded min	-
stranded max	-
stranded with ferrule min	-
stranded with ferrule max	-
DIMENSIONS	
Stripped Length	-
PCB Hole Diameter	1.2 mm
MATERIALS	
Contact Pin	Copper Alloy
INSULATING MATERIAL	
Material	PA 6.6
Flammability Class	UL 94 V-0
TEMPERATURES	
Operating Temperature (without mech. load)	-40 °C - 105 °C
WAVE SOLDERING PROCESS	
Soldering Temperature, recommended	260 °C
Peak Soldering Time, recommended	3-4 s
REFLOW PROCESS	
Soldering Temperature, recommended	-
Peak Soldering Time, recommended	-

COLOURS[1]

	GREEN, RAL 6018		BASALT GREY, RAL 7012
	LIGHT GREEN, similar RAL 6018		BLACK, RAL 9011

COUNTERPARTS (SPACING 5.08 MM)

PCB Terminal Block

AKZ1520

ACCESSORIES

	Description	Article Number
	Coding Star CS1-5.0/5.08-RED	50000000021

ORDER DATA (SPACING 5.08 MM)

Poles	Width (mm)	Article Designation	Article Number	PU
2	10.16	STLZ1520/2G-5.08-H-GREEN	5152002xxxxH	500
3	15.24	STLZ1520/3G-5.08-H-GREEN	5152003xxxxH	500
4	20.32	STLZ1520/4G-5.08-H-GREEN	5152004xxxxH	500
5	25.40	STLZ1520/5G-5.08-H-GREEN	5152005xxxxG	250
6	30.48	STLZ1520/6G-5.08-H-GREEN	5152006xxxxG	250
7	35.56	STLZ1520/7G-5.08-H-GREEN	5152007xxxxG	250
8	40.64	STLZ1520/8G-5.08-H-GREEN	5152008xxxxE	100
9	45.72	STLZ1520/9G-5.08-H-GREEN	5152009xxxxE	100
10	50.80	STLZ1520/10G-5.08-H-GREEN	5152010xxxxE	100
11	55.88	STLZ1520/11G-5.08-H-GREEN	5152011xxxxE	100
12	60.96	STLZ1520/12G-5.08-H-GREEN	5152012xxxxE	100

RATINGS

		c UL us *		VDE *
Usegroup	B	C	D	
Rated Voltage	300 V	-	300 V	250 V
Rated Current	8 A	-	8 A	8 A
Overvoltage Category				III
Test Voltage	1.6 kV	-	1.6 kV	4.0 kV
Pollution Degree				3

* Approval Pending

[1]Colours according to RAL, there may be variations on colour due to production conditions. Special colours on request.

Spacing 5.08 mm

STLZ1520/..F-5.08-H-GREEN

NEW

WIRE SIZES	
solid min	-
solid max	-
stranded min	-
stranded max	-
stranded with ferrule min	-
stranded with ferrule max	-
DIMENSIONS	
Stripped Length	-
PCB Hole Diameter	1.2 mm
MATERIALS	
Thread Insert, Flange	Brass
Contact Pin	Copper Alloy
INSULATING MATERIAL	
Material	PA 6.6
Flammability Class	UL 94 V-0
TEMPERATURES	
Operating Temperature (without mech. load)	-40 °C - 105 °C
WAVE SOLDERING PROCESS	
Soldering Temperature, recommended	260 °C
Peak Soldering Time, recommended	3-4 s
REFLOW PROCESS	
Soldering Temperature, recommended	-
Peak Soldering Time, recommended	-



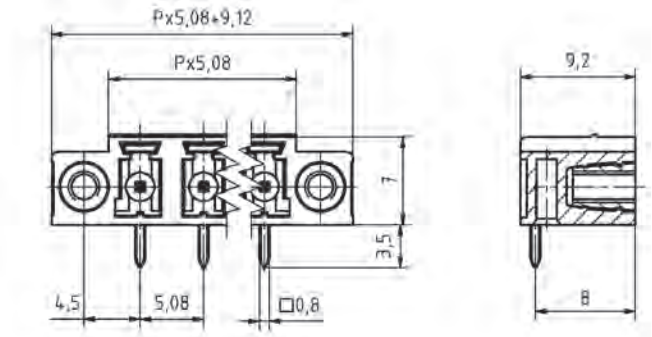

COLOURS[1]

	GREEN, RAL 6018		BASALT GREY, RAL 7012
	LIGHT GREEN, similar RAL 6018		BLACK, RAL 9011

COUNTERPARTS (SPACING 5.08 MM)

PCB Terminal Block
AKZ1520

ORDER DATA (SPACING 5.08 MM)

Poles	Width (mm)	Article Designation	Article Number	PU
2	14.08	STLZ1520/2F-5.08-H-GREEN	5152002xxxxH	500
3	19.16	STLZ1520/3F-5.08-H-GREEN	5152003xxxxH	500
4	24.24	STLZ1520/4F-5.08-H-GREEN	5152004xxxxH	500
5	29.32	STLZ1520/5F-5.08-H-GREEN	5152005xxxxG	250
6	34.40	STLZ1520/6F-5.08-H-GREEN	5152006xxxxG	250
7	39.48	STLZ1520/7F-5.08-H-GREEN	5152007xxxxG	250
8	44.56	STLZ1520/8F-5.08-H-GREEN	5152008xxxxE	100
9	49.64	STLZ1520/9F-5.08-H-GREEN	5152009xxxxE	100
10	54.72	STLZ1520/10F-5.08-H-GREEN	5152010xxxxE	100
11	59.80	STLZ1520/11F-5.08-H-GREEN	5152011xxxxE	100
12	64.88	STLZ1520/12F-5.08-H-GREEN	5152012xxxxE	100

ACCESSORIES

	Description	Article Number
	Coding Star CS1-5.0/5.08-RED	50000000021

RATINGS

	c UL us			VDE*
Usegroup	B	C	D	
Rated Voltage	300 V	-	300 V	250 V
Rated Current	8 A	-	8 A	8 A
Overvoltage Category				III
Test Voltage	1.6 kV	-	1.6 kV	4.0 kV
Pollution Degree				3

* Approval Pending

[1]Colours according to RAL, there may be variations on colour due to production conditions. Special colours on request.

L'IMPULSION
Retrouvez nous sur
www.limpulsion.fr

STL130/..-5.0-V-BLACK
STLZ130/..-5.08-V-BLACK

Spacing 5.0 mm / Spacing 5.08 mm

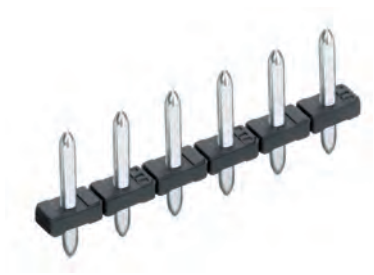

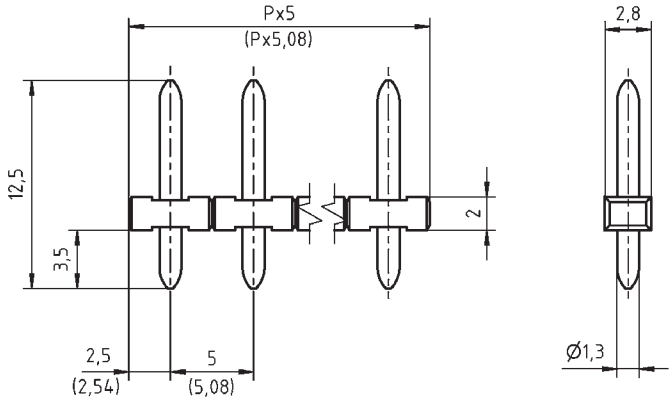

WIRE SIZES	
solid min	-
solid max	-
stranded min	-
stranded max	-
stranded with ferrule min	-
stranded with ferrule max	-
DIMENSIONS	
Stripped Length	-
PCB Hole Diameter	1.5 mm
MATERIALS	
Contact Pin	Brass
INSULATING MATERIAL	
Material	PA 6.6
Flammability Class	UL 94 V-0
TEMPERATURES	
Operating Temperature (without mech. load)	-40 °C - 105 °C
WAVE SOLDERING PROCESS	
Soldering Temperature, recommended	260 °C
Peak Soldering Time, recommended	3-4 s
REFLOW PROCESS	
Soldering Temperature, recommended	-
Peak Soldering Time, recommended	-

COLOURS[1]

BLACK, RAL 9011		LIGHT GREY, RAL 7035	
GREEN, RAL 6018		ORANGE, RAL 2011	
RED, RAL 3003		BLUE, RAL 5015	
YELLOW, RAL 1018		LIGHT GREEN, similar RAL 6018	

COUNTERPARTS (SPACING 5.0 MM)

PCB Terminal Block

AK130

COUNTERPARTS (SPACING 5.08 MM)

PCB Terminal Block

AKZ130

RATINGS

Usegroup	B	C	D	
Rated Voltage	300 V	150 V	300 V	250 V
Rated Current	10 A	10 A	10 A	7 A
Overvoltage Category				III
Test Voltage	1.6 kV	1.3 kV	1.6 kV	4.0 kV
Pollution Degree				3

ORDER DATA (SPACING 5.0 MM)

Poles	Width (mm)	Article Designation	Article Number	PU
2	10.00	STL130/2-5.0-V-BLACK	50130025001H	500
3	15.00	STL130/3-5.0-V-BLACK	50130035001H	500
4	20.00	STL130/4-5.0-V-BLACK	50130045001H	500
5	25.00	STL130/5-5.0-V-BLACK	50130055001G	250
6	30.00	STL130/6-5.0-V-BLACK	50130065001G	250
7	35.00	STL130/7-5.0-V-BLACK	50130075001G	250
8	40.00	STL130/8-5.0-V-BLACK	50130085001E	100
9	45.00	STL130/9-5.0-V-BLACK	50130095001E	100
...	...	...	...	...
24	120.00	STL130/24-5.0-V-BLACK	50130245001D	50

ORDER DATA (SPACING 5.08 MM)

Poles	Width (mm)	Article Designation	Article Number	PU
2	10.16	STLZ130/2-5.08-V-BLACK	50130025051H	500
3	15.24	STLZ130/3-5.08-V-BLACK	50130035051H	500
4	20.32	STLZ130/4-5.08-V-BLACK	50130045051H	500
5	25.40	STLZ130/5-5.08-V-BLACK	50130055051G	250
6	30.48	STLZ130/6-5.08-V-BLACK	50130065051G	250
7	35.56	STLZ130/7-5.08-V-BLACK	50130075051G	250
8	40.64	STLZ130/8-5.08-V-BLACK	50130085051E	100
9	45.72	STLZ130/9-5.08-V-BLACK	50130095051E	100
...	...	...	...	...
16	81.28	STLZ130/16-5.08-V-BLACK	50130165051E	100

[1]Colours according to RAL, there may be variations on colour due to production conditions. Special colours on request.

Spacing 5.0 mm

STL130/..-5.0-V-P3.5-BK-HT

WIRE SIZES	
solid min	-
solid max	-
stranded min	-
stranded max	-
stranded with ferrule min	-
stranded with ferrule max	-
DIMENSIONS	
Stripped Length	-
PCB Hole Diameter	1.5 mm
MATERIALS	
Contact Pin	Brass
INSULATING MATERIAL	
Material	LCP
Flammability Class	UL 94 V-0
TEMPERATURES	
Operating Temperature (without mech. load)	-40 °C - 105 °C
WAVE SOLDERING PROCESS	
Soldering Temperature, recommended	260 °C
Peak Soldering Time, recommended	3-4 s
REFLOW PROCESS	
Soldering Temperature, recommended	217 °C - 245 °C
Peak Soldering Time, recommended	60 s

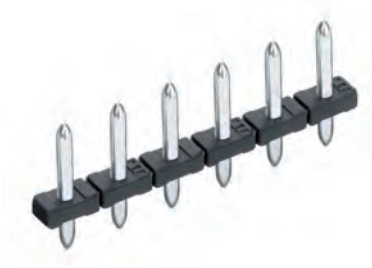

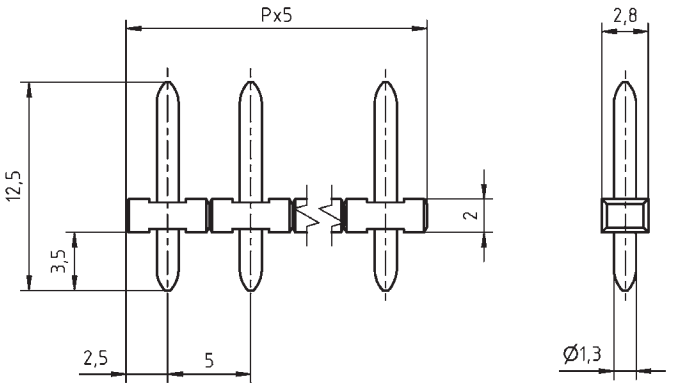

COLOURS[1]
BLACK, RAL 9011

COUNTERPARTS (SPACING 5.0 MM)
PCB Terminal Block
AK130

ORDER DATA (SPACING 5.0 MM)

Poles	Width (mm)	Article Designation	Article Number	PU
2	10.00	STL130/2-5.0-V-P3.5-BK-HT	50130025031H	500
3	15.00	STL130/3-5.0-V-P3.5-BK-HT	50130035031H	500
4	20.00	STL130/4-5.0-V-P3.5-BK-HT	50130045031H	500
5	25.00	STL130/5-5.0-V-P3.5-BK-HT	50130055031G	250
6	30.00	STL130/6-5.0-V-P3.5-BK-HT	50130065031G	250
7	35.00	STL130/7-5.0-V-P3.5-BK-HT	50130075031G	250
8	40.00	STL130/8-5.0-V-P3.5-BK-HT	50130085031E	100
9	45.00	STL130/9-5.0-V-P3.5-BK-HT	50130095031E	100
10	50.00	STL130/10-5.0-V-P3.5-BK-HT	50130105031E	100
11	55.00	STL130/11-5.0-V-P3.5-BK-HT	50130115031E	100
12	60.00	STL130/12-5.0-V-P3.5-BK-HT	50130125031E	100
13	65.00	STL130/13-5.0-V-P3.5-BK-HT	50130135031E	100
14	70.00	STL130/14-5.0-V-P3.5-BK-HT	50130145031E	100
15	75.00	STL130/15-5.0-V-P3.5-BK-HT	50130155031E	100
16	80.00	STL130/16-5.0-V-P3.5-BK-HT	50130165031E	100
17	85.00	STL130/17-5.0-V-P3.5-BK-HT	50130175031D	50
18	90.00	STL130/18-5.0-V-P3.5-BK-HT	50130185031D	50
19	95.00	STL130/19-5.0-V-P3.5-BK-HT	50130195031D	50
20	100.00	STL130/20-5.0-V-P3.5-BK-HT	50130205031D	50
21	105.00	STL130/21-5.0-V-P3.5-BK-HT	50130215031D	50
22	110.00	STL130/22-5.0-V-P3.5-BK-HT	50130225031D	50
23	115.00	STL130/23-5.0-V-P3.5-BK-HT	50130235031D	50
24	120.00	STL130/24-5.0-V-P3.5-BK-HT	50130245031D	50

RATINGS	c UL us			VDE
Usegroup	B	C	D	
Rated Voltage	300 V	150 V	300 V	250 V
Rated Current	10 A	10 A	10 A	7 A
Overvoltage Category				III
Test Voltage	1.6 kV	1.3 kV	1.6 kV	4.0 kV
Pollution Degree				2

[1]Colours according to RAL, there may be variations on colour due to production conditions.

L'IMPULSION
Retrouvez nous sur
www.limpulsion.fr

STL130/..-5.0-V-P3.5-BK-HT

Spacing 5.0 mm



Technical Drawing see page 253

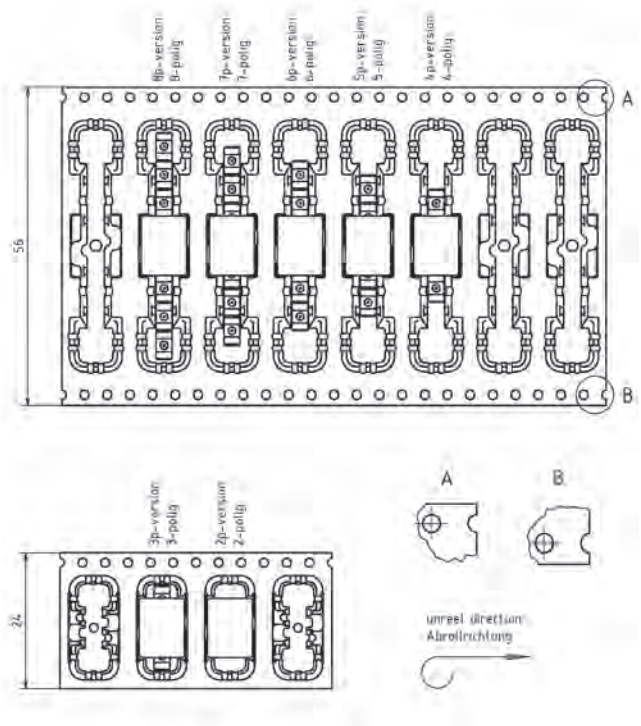

WIRE SIZES	
solid min	-
solid max	-
stranded min	-
stranded max	-
stranded with ferrule min	-
stranded with ferrule max	-
DIMENSIONS	
Stripped Length	-
PCB Hole Diameter	1.5 mm
MATERIALS	
Contact Pin	Brass
INSULATING MATERIAL	
Material	LCP
Flammability Class	UL 94 V-0
TEMPERATURES	
Operating Temperature (without mech. load)	-40 °C - 105 °C
WAVE SOLDERING PROCESS	
Soldering Temperature, recommended	260 °C
Peak Soldering Time, recommended	3-4 s
REFLOW PROCESS	
Soldering Temperature, recommended	217 °C - 245 °C
Peak Soldering Time, recommended	60 s

COLOURS[1]
BLACK, RAL 9011

COUNTERPARTS (SPACING 5.0 MM)
PCB Terminal Block
AK130

TAPE-ON-REEL

Poles	Reel (RD/")	Width (R/mm)	Pitch (RP/mm)	Pieces (PCS)
2-3	13	24	12	330
4-8	13	56	16	250

ORDER DATA (SPACING 5.0 MM)

Poles	Width (mm)	Article Designation	Article Number	PU
2	10.00	STL130/2-5.0-V-P3.5-BK-HT	50130025031R	330
3	15.00	STL130/3-5.0-V-P3.5-BK-HT	50130035031R	330
4	20.00	STL130/4-5.0-V-P3.5-BK-HT	50130045031R	250
5	25.00	STL130/5-5.0-V-P3.5-BK-HT	50130055031R	250
6	30.00	STL130/6-5.0-V-P3.5-BK-HT	50130065031R	250
7	35.00	STL130/7-5.0-V-P3.5-BK-HT	50130075031R	250
8	40.00	STL130/8-5.0-V-P3.5-BK-HT	50130085031R	250

RATINGS	c UL us			VDE
Usegroup	B	C	D	
Rated Voltage	300 V	150 V	300 V	250 V
Rated Current	10 A	10 A	10 A	7 A
Overvoltage Category				III
Test Voltage	1.6 kV	1.3 kV	1.6 kV	4.0 kV
Pollution Degree				2

[1]Colours according to RAL, there may be variations on colour due to production conditions.

Spacing 5.0 mm

STL132/..-5.0-V-BLACK

WIRE SIZES	
solid min	-
solid max	-
stranded min	-
stranded max	-
stranded with ferrule min	-
stranded with ferrule max	-
DIMENSIONS	
Stripped Length	-
PCB Hole Diameter	1.2 mm
MATERIALS	
Contact Pin	Brass
INSULATING MATERIAL	
Material	PA 6.6
Flammability Class	UL 94 V-0
TEMPERATURES	
Operating Temperature (without mech. load)	-40 °C - 105 °C
WAVE SOLDERING PROCESS	
Soldering Temperature, recommended	260 °C
Peak Soldering Time, recommended	3-4 s
REFLOW PROCESS	
Soldering Temperature, recommended	-
Peak Soldering Time, recommended	-

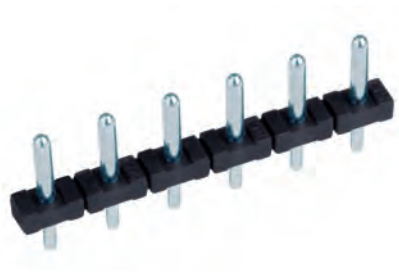

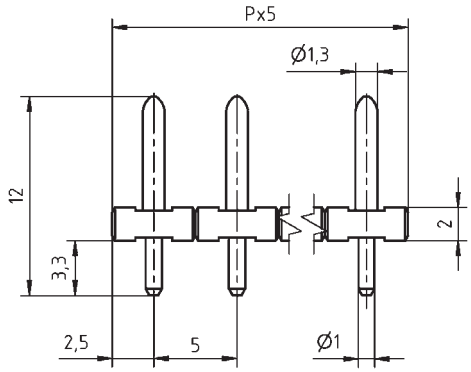

COLOURS[1]
BLACK, RAL 9011

COUNTERPARTS (SPACING 5.0 MM)
PCB Terminal Block
AK130

ORDER DATA (SPACING 5.0 MM)

Poles	Width (mm)	Article Designation	Article Number	PU
2	10.00	STL132/2-5.0-V-BLACK	50132025001H	500
3	15.00	STL132/3-5.0-V-BLACK	50132035001H	500
4	20.00	STL132/4-5.0-V-BLACK	50132045001H	500
5	25.00	STL132/5-5.0-V-BLACK	50132055001G	250
6	30.00	STL132/6-5.0-V-BLACK	50132065001G	250
7	35.00	STL132/7-5.0-V-BLACK	50132075001G	250
8	40.00	STL132/8-5.0-V-BLACK	50132085001E	100
9	45.00	STL132/9-5.0-V-BLACK	50132095001E	100
10	50.00	STL132/10-5.0-V-BLACK	50132105001E	100
11	55.00	STL132/11-5.0-V-BLACK	50132115001E	100
12	60.00	STL132/12-5.0-V-BLACK	50132125001E	100
13	65.00	STL132/13-5.0-V-BLACK	50132135001E	100
14	70.00	STL132/14-5.0-V-BLACK	50132145001E	100
15	75.00	STL132/15-5.0-V-BLACK	50132155001E	100
16	80.00	STL132/16-5.0-V-BLACK	50132165001E	100
17	85.00	STL132/17-5.0-V-BLACK	50132175001D	50
18	90.00	STL132/18-5.0-V-BLACK	50132185001D	50
19	95.00	STL132/19-5.0-V-BLACK	50132195001D	50
20	100.00	STL132/20-5.0-V-BLACK	50132205001D	50
21	105.00	STL132/21-5.0-V-BLACK	50132215001D	50
22	110.00	STL132/22-5.0-V-BLACK	50132225001D	50
23	115.00	STL132/23-5.0-V-BLACK	50132235001D	50
24	120.00	STL132/24-5.0-V-BLACK	50132245001D	50

RATINGS	c UL us			VDE
Usegroup	B	C	D	
Rated Voltage	300 V	-	300 V	250 V
Rated Current	10 A	-	10 A	7 A
Overvoltage Category				III
Test Voltage	1.6 kV	-	1.6 kV	4.0 kV
Pollution Degree				3

[1]Colours according to RAL, there may be variations on colour due to production conditions. Special colours on request.

L'IMPULSION
Retrouvez nous sur
www.limpulsion.fr

STL132/..-5.0-V-P3.3-BK-HT

Spacing 5.0 mm

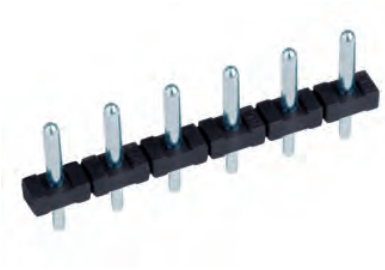

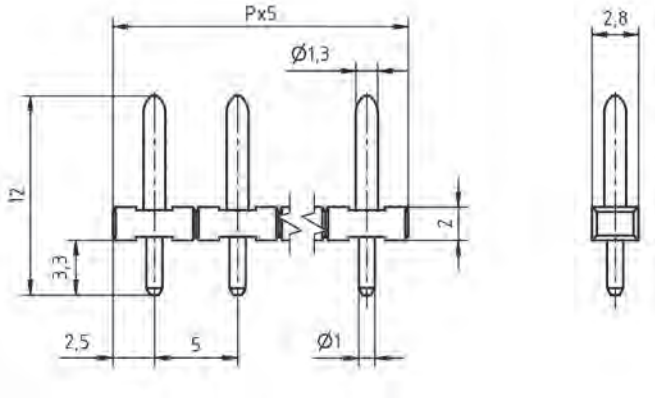

WIRE SIZES	
solid min	-
solid max	-
stranded min	-
stranded max	-
stranded with ferrule min	-
stranded with ferrule max	-
DIMENSIONS	
Stripped Length	-
PCB Hole Diameter	1.2 mm
MATERIALS	
Contact Pin	Brass
INSULATING MATERIAL	
Material	LCP
Flammability Class	UL 94 V-0
TEMPERATURES	
Operating Temperature (without mech. load)	-40 °C - 105 °C
WAVE SOLDERING PROCESS	
Soldering Temperature, recommended	260 °C
Peak Soldering Time, recommended	3-4 s
REFLOW PROCESS	
Soldering Temperature, recommended	217 °C - 245 °C
Peak Soldering Time, recommended	60 s

COLOURS[1]
BLACK, RAL 9011

COUNTERPARTS (SPACING 5.0 MM)
PCB Terminal Block
AK130

ORDER DATA (SPACING 5.0 MM)

Poles	Width (mm)	Article Designation	Article Number	PU
2	10.00	STL132/2-5.0-V-P3.3-BK-HT	50132025031H	500
3	15.00	STL132/3-5.0-V-P3.3-BK-HT	50132035031H	500
4	20.00	STL132/4-5.0-V-P3.3-BK-HT	50132045031H	500
5	25.00	STL132/5-5.0-V-P3.3-BK-HT	50132055031G	250
6	30.00	STL132/6-5.0-V-P3.3-BK-HT	50132065031G	250
7	35.00	STL132/7-5.0-V-P3.3-BK-HT	50132075031G	250
8	40.00	STL132/8-5.0-V-P3.3-BK-HT	50132085031E	100
9	45.00	STL132/9-5.0-V-P3.3-BK-HT	50132095031E	100
10	50.00	STL132/10-5.0-V-P3.3-BK-HT	50132105031E	100
11	55.00	STL132/11-5.0-V-P3.3-BK-HT	50132115031E	100
12	60.00	STL132/12-5.0-V-P3.3-BK-HT	50132125031E	100
13	65.00	STL132/13-5.0-V-P3.3-BK-HT	50132135031E	100
14	70.00	STL132/14-5.0-V-P3.3-BK-HT	50132145031E	100
15	75.00	STL132/15-5.0-V-P3.3-BK-HT	50132155031E	100
16	80.00	STL132/16-5.0-V-P3.3-BK-HT	50132165031E	100
17	85.00	STL132/17-5.0-V-P3.3-BK-HT	50132175031D	50
18	90.00	STL132/18-5.0-V-P3.3-BK-HT	50132185031D	50
19	95.00	STL132/19-5.0-V-P3.3-BK-HT	50132195031D	50
20	100.00	STL132/20-5.0-V-P3.3-BK-HT	50132205031D	50
21	105.00	STL132/21-5.0-V-P3.3-BK-HT	50132215031D	50
22	110.00	STL132/22-5.0-V-P3.3-BK-HT	50132225031D	50
23	115.00	STL132/23-5.0-V-P3.3-BK-HT	50132235031D	50
24	120.00	STL132/24-5.0-V-P3.3-BK-HT	50132245031D	50

RATINGS	c UL us			VDE
Usegroup	B	C	D	
Rated Voltage	300 V	-	300 V	250 V
Rated Current	10 A	-	10 A	7 A
Overvoltage Category				III
Test Voltage	1.6 kV	-	1.6 kV	4.0 kV
Pollution Degree				2

[1]Colours according to RAL, there may be variations on colour due to production conditions.

Spacing 5.0 mm

STL132/..-5.0-V-P3.3-BK-HT

WIRE SIZES	
solid min	-
solid max	-
stranded min	-
stranded max	-
stranded with ferrule min	-
stranded with ferrule max	-
DIMENSIONS	
Stripped Length	-
PCB Hole Diameter	1.2 mm
MATERIALS	
Contact Pin	Brass
INSULATING MATERIAL	
Material	LCP
Flammability Class	UL 94 V-0
TEMPERATURES	
Operating Temperature (without mech. load)	-40 °C - 105 °C
WAVE SOLDERING PROCESS	
Soldering Temperature, recommended	260 °C
Peak Soldering Time, recommended	3-4 s
REFLOW PROCESS	
Soldering Temperature, recommended	217 °C - 245 °C
Peak Soldering Time, recommended	60 s



Technical Drawing see page 256

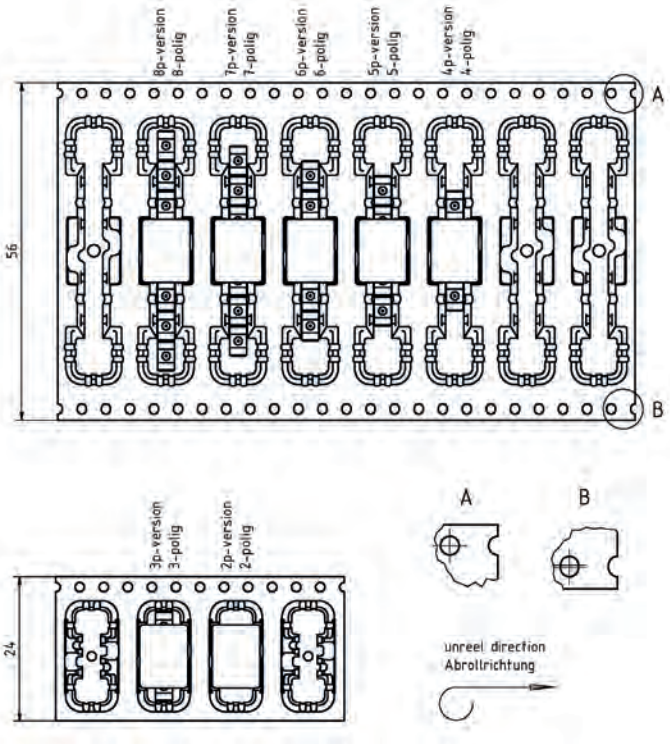

COLOURS[1]	
	BLACK, RAL 9011

COUNTERPARTS (SPACING 5.0 MM)
PCB Terminal Block
AK130

TAPE-ON-REEL

Poles	Reel (RD/")	Width (R/mm)	Pitch (RP/mm)	Pieces (PCS)
2-3	13	24	12	330
4-8	13	56	16	250

ORDER DATA (SPACING 5.0 MM)

Poles	Width (mm)	Article Designation	Article Number	PU
2	10.00	STL132/2-5.0-V-P3.3-BK-HT	50132025031R	330
3	15.00	STL132/3-5.0-V-P3.3-BK-HT	50132035031R	330
4	20.00	STL132/4-5.0-V-P3.3-BK-HT	50132045031R	250
5	25.00	STL132/5-5.0-V-P3.3-BK-HT	50132055031R	250
6	30.00	STL132/6-5.0-V-P3.3-BK-HT	50132065031R	250
7	35.00	STL132/7-5.0-V-P3.3-BK-HT	50132075031R	250
8	40.00	STL132/8-5.0-V-P3.3-BK-HT	50132085031R	250

RATINGS	c UL us		VDE	
Usegroup	B	C	D	
Rated Voltage	300 V	-	300 V	250 V
Rated Current	10 A	-	10 A	7 A
Overvoltage Category				III
Test Voltage	1.6 kV	-	1.6 kV	4.0 kV
Pollution Degree				2

[1]Colours according to RAL, there may be variations on colour due to production conditions.

L'IMPULSION
Retrouvez nous sur
www.limpulsion.fr

STL133/..-5.0-V-BLACK

Spacing 5.0 mm



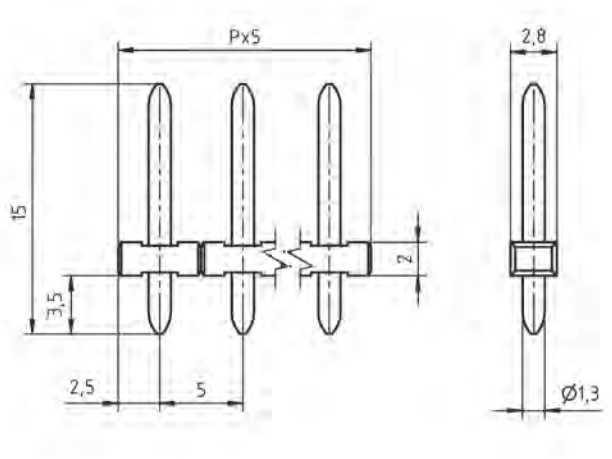

WIRE SIZES	
solid min	-
solid max	-
stranded min	-
stranded max	-
stranded with ferrule min	-
stranded with ferrule max	-
DIMENSIONS	
Stripped Length	-
PCB Hole Diameter	1.5 mm
MATERIALS	
Contact Pin	Brass
INSULATING MATERIAL	
Material	PA 6.6
Flammability Class	UL 94 V-0
TEMPERATURES	
Operating Temperature (without mech. load)	-40 °C - 105 °C
WAVE SOLDERING PROCESS	
Soldering Temperature, recommended	260 °C
Peak Soldering Time, recommended	3-4 s
REFLOW PROCESS	
Soldering Temperature, recommended	-
Peak Soldering Time, recommended	-

COLOURS[1]
BLACK, RAL 9011

COUNTERPARTS (SPACING 5.0 MM)
PCB Terminal Block
AK133

ORDER DATA (SPACING 5.0 MM)

Poles	Width (mm)	Article Designation	Article Number	PU
2	10.00	STL133/2-5.0-V-BLACK	50133025001H	500
3	15.00	STL133/3-5.0-V-BLACK	50133035001H	500
4	20.00	STL133/4-5.0-V-BLACK	50133045001H	500
5	25.00	STL133/5-5.0-V-BLACK	50133055001G	250
6	30.00	STL133/6-5.0-V-BLACK	50133065001G	250
7	35.00	STL133/7-5.0-V-BLACK	50133075001G	250
8	40.00	STL133/8-5.0-V-BLACK	50133085001E	100
9	45.00	STL133/9-5.0-V-BLACK	50133095001E	100
10	50.00	STL133/10-5.0-V-BLACK	50133105001E	100
11	55.00	STL133/11-5.0-V-BLACK	50133115001E	100
12	60.00	STL133/12-5.0-V-BLACK	50133125001E	100

RATINGS				
Usegroup	B	C	D	
Rated Voltage	300 V	-	300 V	250 V
Rated Current	10 A	-	10 A	7 A
Overvoltage Category				III
Test Voltage	1.6 kV	-	1.6 kV	4.0 kV
Pollution Degree				3

[1]Colours according to RAL, there may be variations on colour due to production conditions. Special colours on request.

Spacing 5.0 mm

STL133/..-5.0-V-P3.5-BK-HT

WIRE SIZES	
solid min	-
solid max	-
stranded min	-
stranded max	-
stranded with ferrule min	-
stranded with ferrule max	-
DIMENSIONS	
Stripped Length	-
PCB Hole Diameter	1.5 mm
MATERIALS	
Contact Pin	Brass
INSULATING MATERIAL	
Material	LCP
Flammability Class	UL 94 V-0
TEMPERATURES	
Operating Temperature (without mech. load)	-40 °C - 105 °C
WAVE SOLDERING PROCESS	
Soldering Temperature, recommended	260 °C
Peak Soldering Time, recommended	3-4 s
REFLOW PROCESS	
Soldering Temperature, recommended	217 °C - 245 °C
Peak Soldering Time, recommended	60 s



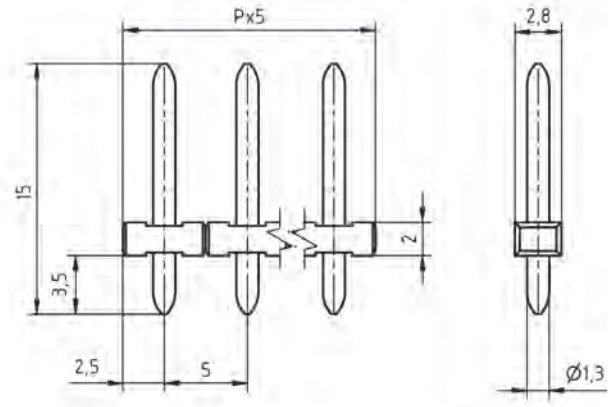

COLOURS[1]	
	BLACK, RAL 9011

COUNTERPARTS (SPACING 5.0 MM)
PCB Terminal Block
AK133

ORDER DATA (SPACING 5.0 MM)

Poles	Width (mm)	Article Designation	Article Number	PU
2	10.00	STL133/2-5.0-V-P3.5-BK-HT	50133025031H	500
3	15.00	STL133/3-5.0-V-P3.5-BK-HT	50133035031H	500
4	20.00	STL133/4-5.0-V-P3.5-BK-HT	50133045031H	500
5	25.00	STL133/5-5.0-V-P3.5-BK-HT	50133055031G	250
6	30.00	STL133/6-5.0-V-P3.5-BK-HT	50133065031G	250
7	35.00	STL133/7-5.0-V-P3.5-BK-HT	50133075031G	250
8	40.00	STL133/8-5.0-V-P3.5-BK-HT	50133085031E	100
9	45.00	STL133/9-5.0-V-P3.5-BK-HT	50133095031E	100
10	50.00	STL133/10-5.0-V-P3.5-BK-HT	50133105031E	100
11	55.00	STL133/11-5.0-V-P3.5-BK-HT	50133115031E	100
12	60.00	STL133/12-5.0-V-P3.5-BK-HT	50133125031E	100

RATINGS	c UL us			VDE*
Usegroup	B	C	D	
Rated Voltage	300 V	-	300 V	250 V
Rated Current	10 A	-	10 A	7 A
Overvoltage Category				III
Test Voltage	1.6 kV	-	1.6 kV	4.0 kV
Pollution Degree				2

[1]Colours according to RAL, there may be variations on colour due to production conditions.

L'IMPULSION
Retrouvez nous sur
www.limpulsion.fr

STL136/..-5.0-V-BLACK

Spacing 5.0 mm



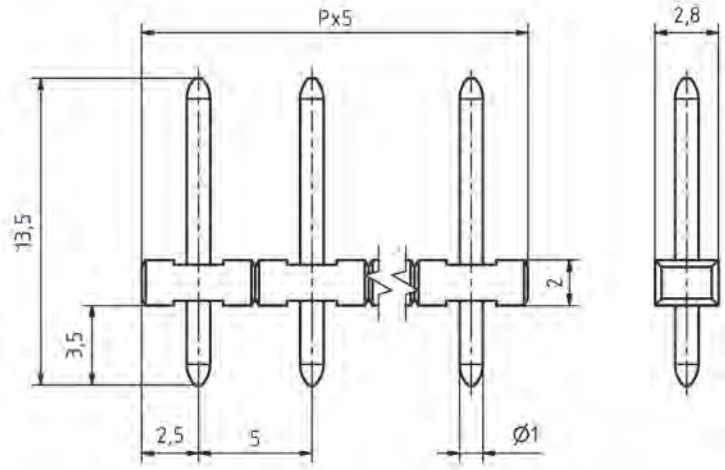

WIRE SIZES	
solid min	-
solid max	-
stranded min	-
stranded max	-
stranded with ferrule min	-
stranded with ferrule max	-
DIMENSIONS	
Stripped Length	-
PCB Hole Diameter	1.3 mm
MATERIALS	
Contact Pin	Brass
INSULATING MATERIAL	
Material	PA 6.6
Flammability Class	UL 94 V-0
TEMPERATURES	
Operating Temperature (without mech. load)	-40 °C - 105 °C
WAVE SOLDERING PROCESS	
Soldering Temperature, recommended	260 °C
Peak Soldering Time, recommended	3-4 s
REFLOW PROCESS	
Soldering Temperature, recommended	-
Peak Soldering Time, recommended	-

COLOURS[1]
BLACK, RAL 9011

COUNTERPARTS (SPACING 5.0 MM)
PCB Terminal Block
AK136

ORDER DATA (SPACING 5.0 MM)

Poles	Width (mm)	Article Designation	Article Number	PU
2	10.00	STL136/2-5.0-V-BLACK	50136025001H	500
3	15.00	STL136/3-5.0-V-BLACK	50136035001H	500
4	20.00	STL136/4-5.0-V-BLACK	50136045001H	500
5	25.00	STL136/5-5.0-V-BLACK	50136055001G	250
6	30.00	STL136/6-5.0-V-BLACK	50136065001G	250
7	35.00	STL136/7-5.0-V-BLACK	50136075001G	250
8	40.00	STL136/8-5.0-V-BLACK	50136085001E	100
9	45.00	STL136/9-5.0-V-BLACK	50136095001E	100
10	50.00	STL136/10-5.0-V-BLACK	50136105001E	100
11	55.00	STL136/11-5.0-V-BLACK	50136115001E	100
12	60.00	STL136/12-5.0-V-BLACK	50136125001E	100

RATINGS	c UL us			VDE*
Usegroup	B	C	D	
Rated Voltage	300 V	-	300 V	250 V
Rated Current	10 A	-	10 A	7 A
Overvoltage Category				III
Test Voltage	1.6 kV	-	1.6 kV	4.0 kV
Pollution Degree				3
				* Approval Pending

[1]Colours according to RAL, there may be variations on colour due to production conditions. Special colours on request.

Spacing 5.0 mm

STL136/..-5.0-V-P2.0-BK-HT

WIRE SIZES	
solid min	-
solid max	-
stranded min	-
stranded max	-
stranded with ferrule min	-
stranded with ferrule max	-
DIMENSIONS	
Stripped Length	-
PCB Hole Diameter	1.3 mm
MATERIALS	
Contact Pin	Brass
INSULATING MATERIAL	
Material	LCP
Flammability Class	UL 94 V-0
TEMPERATURES	
Operating Temperature (without mech. load)	-40 °C - 105 °C
WAVE SOLDERING PROCESS	
Soldering Temperature, recommended	260 °C
Peak Soldering Time, recommended	3-4 s
REFLOW PROCESS	
Soldering Temperature, recommended	217 °C - 245 °C
Peak Soldering Time, recommended	60 s



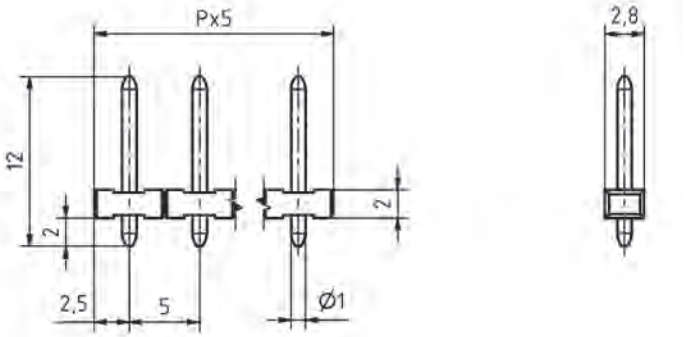

COLOURS[1]	
	BLACK, RAL 9011

COUNTERPARTS (SPACING 5.0 MM)
PCB Terminal Block
AK136

ORDER DATA (SPACING 5.0 MM)

Poles	Width (mm)	Article Designation	Article Number	PU
2	10.00	STL136/2-5.0-V-P2.0-BK-HT	50136025031H	500
3	15.00	STL136/3-5.0-V-P2.0-BK-HT	50136035031H	500
4	20.00	STL136/4-5.0-V-P2.0-BK-HT	50136045031H	500
5	25.00	STL136/5-5.0-V-P2.0-BK-HT	50136055031G	250
6	30.00	STL136/6-5.0-V-P2.0-BK-HT	50136065031G	250
7	35.00	STL136/7-5.0-V-P2.0-BK-HT	50136075031G	250
8	40.00	STL136/8-5.0-V-P2.0-BK-HT	50136085031E	100
9	45.00	STL136/9-5.0-V-P2.0-BK-HT	50136095031E	100
10	50.00	STL136/10-5.0-V-P2.0-BK-HT	50136105031E	100
11	55.00	STL136/11-5.0-V-P2.0-BK-HT	50136115031E	100
12	60.00	STL136/12-5.0-V-P2.0-BK-HT	50136125031E	100

RATINGS	c UL us			VDE *
Usegroup	B	C	D	
Rated Voltage	300 V	-	300 V	250 V
Rated Current	10 A	-	10 A	7 A
Overvoltage Category				III
Test Voltage	1.6 kV	-	1.6 kV	4.0 kV
Pollution Degree				2

* Approval Pending

[1]Colours according to RAL, there may be variations on colour due to production conditions.

L'IMPULSION
Retrouvez nous sur
www.limpulsion.fr

NEW

STL136/..-5.0-V-P2.0-BK-HT

Spacing 5.0 mm



Technical Drawing see page 261

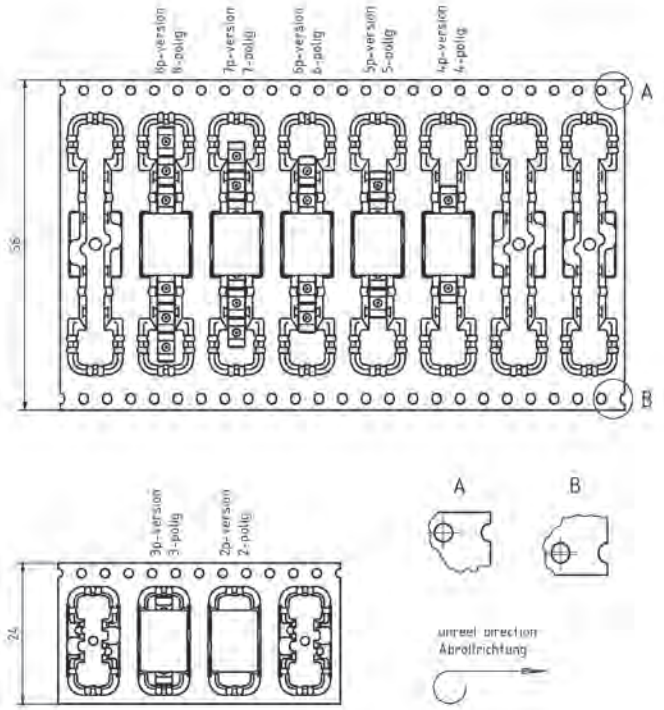

WIRE SIZES	
solid min	-
solid max	-
stranded min	-
stranded max	-
stranded with ferrule min	-
stranded with ferrule max	-
DIMENSIONS	
Stripped Length	-
PCB Hole Diameter	1.3 mm
MATERIALS	
Contact Pin	Brass
INSULATING MATERIAL	
Material	LCP
Flammability Class	UL 94 V-0
TEMPERATURES	
Operating Temperature (without mech. load)	-40 °C - 105 °C
WAVE SOLDERING PROCESS	
Soldering Temperature, recommended	260 °C
Peak Soldering Time, recommended	3-4 s
REFLOW PROCESS	
Soldering Temperature, recommended	217 °C - 245 °C
Peak Soldering Time, recommended	60 s

COLOURS[1]
BLACK, RAL 9011

COUNTERPARTS (SPACING 5.0 MM)
PCB Terminal Block
AK136

TAPE-ON-REEL

Poles	Reel (RD/")	Width (R/mm)	Pitch (RP/mm)	Pieces (PCS)
2-3	13	24	12	330
4-8	13	56	16	250

ORDER DATA (SPACING 5.0 MM)

Poles	Width (mm)	Article Designation	Article Number	PU
2	10.00	STL136/2-5.0-V-P2.0-BK-HT	50136025031R	275
3	15.00	STL136/3-5.0-V-P2.0-BK-HT	50136035031R	275
4	20.00	STL136/4-5.0-V-P2.0-BK-HT	50136045031R	200
5	25.00	STL136/5-5.0-V-P2.0-BK-HT	50136055031R	200
6	30.00	STL136/6-5.0-V-P2.0-BK-HT	50136065031R	200
7	35.00	STL136/7-5.0-V-P2.0-BK-HT	50136075031R	200
8	40.00	STL136/8-5.0-V-P2.0-BK-HT	50136085031R	200

RATINGS	c UL us			VDE*
Usegroup	B	C	D	
Rated Voltage	300 V	-	300 V	250 V
Rated Current	10 A	-	10 A	7 A
Overvoltage Category				III
Test Voltage	1.6 kV	-	1.6 kV	4.0 kV
Pollution Degree				2

* Approval Pending

[1]Colours according to RAL, there may be variations on colour due to production conditions.

Spacing 5.0 mm

STL136/..-5.0-V-BK-SMD

NEW

WIRE SIZES	
solid min	-
solid max	-
stranded min	-
stranded max	-
stranded with ferrule min	-
stranded with ferrule max	-
DIMENSIONS	
Stripped Length	-
PCB Hole Diameter	-
MATERIALS	
Contact Pin	Copper Alloy
INSULATING MATERIAL	
Material	PA 6.6
Flammability Class	UL 94 V-0
TEMPERATURES	
Operating Temperature (without mech. load)	-40 °C - 105 °C
WAVE SOLDERING PROCESS	
Soldering Temperature, recommended	260 °C
Peak Soldering Time, recommended	-
REFLOW PROCESS	
Soldering Temperature, recommended	217 °C - 245 °C
Peak Soldering Time, recommended	60 s



Tape-on-Reel Drawing see page 262

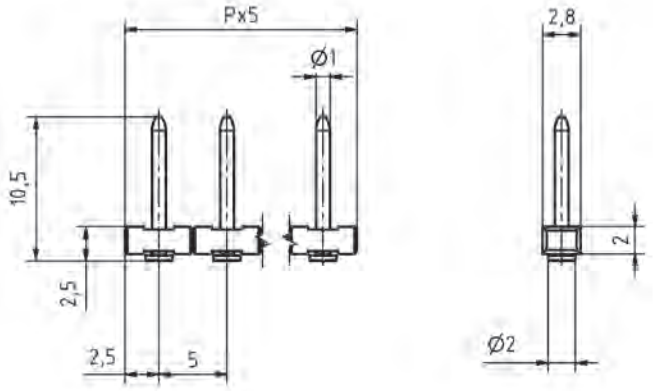

COLOURS[1]
BLACK, RAL 9011

COUNTERPARTS (SPACING 5.0 MM)
PCB Terminal Block
AK136

TAPE-ON-REEL

Poles	Reel (RD/")	Width (R/mm)	Pitch (RP/mm)	Pieces (PCS)
2-3	13	24	12	330
4-8	13	56	16	250

ORDER DATA (SPACING 5.0 MM)

Poles	Width (mm)	Article Designation	Article Number	PU
2	10.00	STL136/2-5.0-V-BK-SMD	50136029031R	330
3	15.00	STL136/3-5.0-V-BK-SMD	50136039031R	330
4	20.00	STL136/4-5.0-V-BK-SMD	50136049031R	250
5	25.00	STL136/5-5.0-V-BK-SMD	50136059031R	250
6	30.00	STL136/6-5.0-V-BK-SMD	50136069031R	250
7	35.00	STL136/7-5.0-V-BK-SMD	50136079031R	250
8	40.00	STL136/8-5.0-V-BK-SMD	50136089031R	250

RATINGS	c UL us			VDE*
Usegroup	B	C	D	
Rated Voltage	300 V	-	300 V	250 V
Rated Current	8 A	-	8 A	7 A
Overvoltage Category				III
Test Voltage	1.6 kV	-	1.6 kV	4.0 kV
Pollution Degree				3

* Approval Pending

[1]Colours according to RAL, there may be variations on colour due to production conditions.

L'IMPULSION
Retrouvez nous sur
www.limpulsion.fr

STL140/..-5.0-H-BLACK

Spacing 5.0 mm



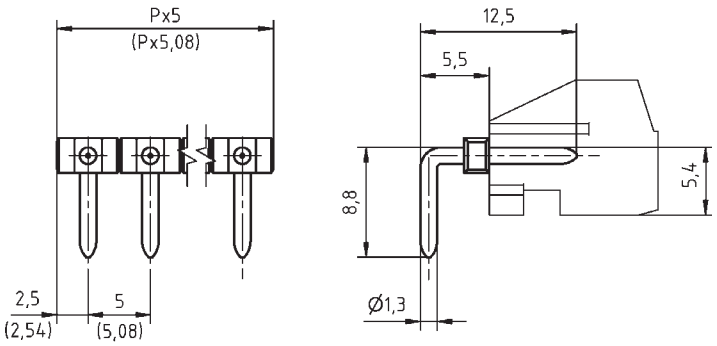

WIRE SIZES	
solid min	-
solid max	-
stranded min	-
stranded max	-
stranded with ferrule min	-
stranded with ferrule max	-
DIMENSIONS	
Stripped Length	-
PCB Hole Diameter	1.5 mm
MATERIALS	
Contact Pin	Brass
INSULATING MATERIAL	
Material	PA 6.6
Flammability Class	UL 94 V-0
TEMPERATURES	
Operating Temperature (without mech. load)	-40 °C - 105 °C
WAVE SOLDERING PROCESS	
Soldering Temperature, recommended	260 °C
Peak Soldering Time, recommended	3-4 s
REFLOW PROCESS	
Soldering Temperature, recommended	-
Peak Soldering Time, recommended	-

COLOURS[1]

BLACK, RAL 9011	LIGHT GREY, RAL 7035
GREEN, RAL 6018	ORANGE, RAL 2011
RED, RAL 3003	BLUE, RAL 5015
YELLOW, RAL 1018	LIGHT GREEN, similar RAL 6018

COUNTERPARTS (SPACING 5.0 MM)

PCB Terminal Block

AK130

RATINGS	c UL us		VDE	
Usegroup	B	C	D	
Rated Voltage	300 V	-	300 V	250 V
Rated Current	10 A	-	10 A	7 A
Overvoltage Category				III
Test Voltage	1.6 kV	-	1.6 kV	4.0 kV
Pollution Degree				3

ORDER DATA (SPACING 5.0 MM)

Poles	Width (mm)	Article Designation	Article Number	PU
2	10.00	STL140/2-5.0-H-BLACK	50140025001H	500
3	15.00	STL140/3-5.0-H-BLACK	50140035001H	500
4	20.00	STL140/4-5.0-H-BLACK	50140045001H	500
5	25.00	STL140/5-5.0-H-BLACK	50140055001G	250
6	30.00	STL140/6-5.0-H-BLACK	50140065001G	250
7	35.00	STL140/7-5.0-H-BLACK	50140075001G	250
8	40.00	STL140/8-5.0-H-BLACK	50140085001E	100
9	45.00	STL140/9-5.0-H-BLACK	50140095001E	100
10	50.00	STL140/10-5.0-H-BLACK	50140105001E	100
11	55.00	STL140/11-5.0-H-BLACK	50140115001E	100
12	60.00	STL140/12-5.0-H-BLACK	50140125001E	100
13	65.00	STL140/13-5.0-H-BLACK	50140135001E	100
14	70.00	STL140/14-5.0-H-BLACK	50140145001E	100
15	75.00	STL140/15-5.0-H-BLACK	50140155001E	100
16	80.00	STL140/16-5.0-H-BLACK	50140165001E	100
17	85.00	STL140/17-5.0-H-BLACK	50140175001D	50
18	90.00	STL140/18-5.0-H-BLACK	50140185001D	50
19	95.00	STL140/19-5.0-H-BLACK	50140195001D	50
20	100.00	STL140/20-5.0-H-BLACK	50140205001D	50
21	105.00	STL140/21-5.0-H-BLACK	50140215001D	50
22	110.00	STL140/22-5.0-H-BLACK	50140225001D	50
23	115.00	STL140/23-5.0-H-BLACK	50140235001D	50
24	120.00	STL140/24-5.0-H-BLACK	50140245001D	50

[1]Colours according to RAL, there may be variations on colour due to production conditions. Special colours on request.

Spacing 5.0 mm

STL140/..-5.0-H-BLACK-HT

WIRE SIZES	
solid min	-
solid max	-
stranded min	-
stranded max	-
stranded with ferrule min	-
stranded with ferrule max	-
DIMENSIONS	
Stripped Length	-
PCB Hole Diameter	1.5 mm
MATERIALS	
Contact Pin	Brass
INSULATING MATERIAL	
Material	LCP
Flammability Class	UL 94 V-0
TEMPERATURES	
Operating Temperature (without mech. load)	-40 °C - 105 °C
WAVE SOLDERING PROCESS	
Soldering Temperature, recommended	260 °C
Peak Soldering Time, recommended	3-4 s
REFLOW PROCESS	
Soldering Temperature, recommended	217 °C - 245 °C
Peak Soldering Time, recommended	60 s



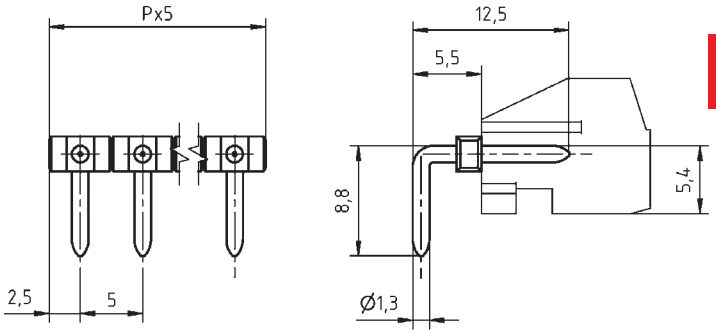

COLOURS1
BLACK, RAL 9011

COUNTERPARTS (SPACING 5.0 MM)
PCB Terminal Block
AK130

ORDER DATA (SPACING 5.0 MM)

Poles	Width (mm)	Article Designation	Article Number	PU
2	10.00	STL140/2-5.0-H-BLACK-HT	50140025101H	500
3	15.00	STL140/3-5.0-H-BLACK-HT	50140035101H	500
4	20.00	STL140/4-5.0-H-BLACK-HT	50140045101H	500
5	25.00	STL140/5-5.0-H-BLACK-HT	50140055101G	250
6	30.00	STL140/6-5.0-H-BLACK-HT	50140065101G	250
7	35.00	STL140/7-5.0-H-BLACK-HT	50140075101G	250
8	40.00	STL140/8-5.0-H-BLACK-HT	50140085101E	100
9	45.00	STL140/9-5.0-H-BLACK-HT	50140095101E	100
10	50.00	STL140/10-5.0-H-BLACK-HT	50140105101E	100
11	55.00	STL140/11-5.0-H-BLACK-HT	50140115101E	100
12	60.00	STL140/12-5.0-H-BLACK-HT	50140125101E	100
13	65.00	STL140/13-5.0-H-BLACK-HT	50140135101E	100
14	70.00	STL140/14-5.0-H-BLACK-HT	50140145101E	100
15	75.00	STL140/15-5.0-H-BLACK-HT	50140155101E	100
16	80.00	STL140/16-5.0-H-BLACK-HT	50140165101E	100
17	85.00	STL140/17-5.0-H-BLACK-HT	50140175101D	50
18	90.00	STL140/18-5.0-H-BLACK-HT	50140185101D	50
19	95.00	STL140/19-5.0-H-BLACK-HT	50140195101D	50
20	100.00	STL140/20-5.0-H-BLACK-HT	50140205101D	50
21	105.00	STL140/21-5.0-H-BLACK-HT	50140215101D	50
22	110.00	STL140/22-5.0-H-BLACK-HT	50140225101D	50

RATINGS	c UL us			VDE
Usegroup	B	C	D	
Rated Voltage	300 V	-	300 V	250 V
Rated Current	10 A	-	10 A	7 A
Overvoltage Category				III
Test Voltage	1.6 kV	-	1.6 kV	4.0 kV
Pollution Degree				2

[1]Colours according to RAL, there may be variations on colour due to production conditions.

L'IMPULSION
Retrouvez nous sur
www.limpulsion.fr

NEW

STL190/..-5.75-V-PT..-SMD

Spacing 5.75 mm
3 pole also available



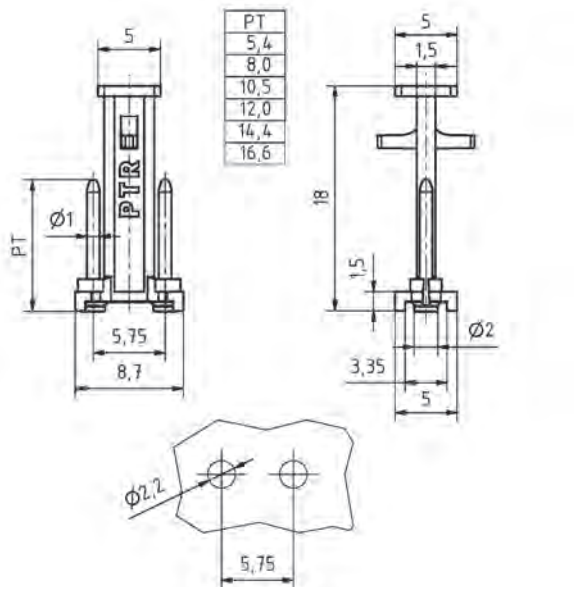

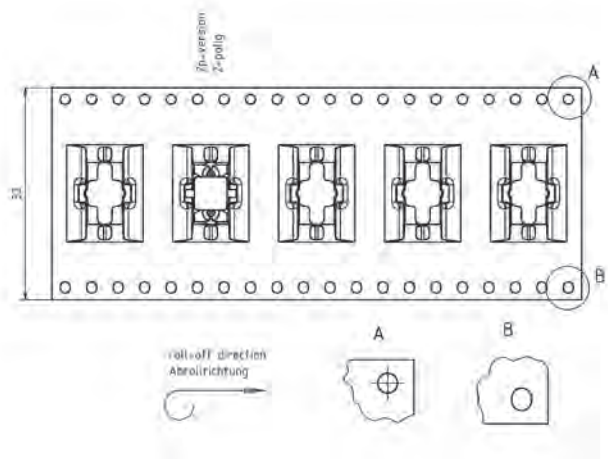

WIRE SIZES	
solid min	-
solid max	-
stranded min	-
stranded max	-
stranded with ferrule min	-
stranded with ferrule max	-
DIMENSIONS	
Stripped Length	-
PCB Hole Diameter	-
MATERIALS	
Contact Pin	Copper Alloy
INSULATING MATERIAL	
Material	PPS
Flammability Class	UL 94 V-0
TEMPERATURES	
Operating Temperature (without mech. load)	-40 °C - 105 °C
WAVE SOLDERING PROCESS	
Soldering Temperature, recommended	-
Peak Soldering Time, recommended	-
REFLOW PROCESS	
Soldering Temperature, recommended	217 °C - 245 °C
Peak Soldering Time, recommended	60 s

ELECTRICAL DATA	
Einspeisespannung	29 V (30 V)
Strom	6 A

TAPE-ON-REEL (FOR ALL PIN LENGTH)

Poles	Reel (RD/")	Width (R/mm)	Pitch (RP/mm)	Pieces (PCS)
2-3	13	32	16	200

ORDER DATA FOR VERSION PIN LENGTH (PT) 5.4

Poles	Width (mm)	Article Designation	Article Number	PU
2	8.65	STL190/2-5.75-V-PT5.4-SMD	50190025305R	200

ORDER DATA FOR VERSION PIN LENGTH (PT) 8.0

Poles	Width (mm)	Article Designation	Article Number	PU
2	8.65	STL190/2-5.75-V-PT8.0-SMD	50190025306R	200

ORDER DATA FOR VERSION PIN LENGTH (PT) 10.5

Poles	Width (mm)	Article Designation	Article Number	PU
2	8.65	STL190/2-5.75-V-PT10.5-SMD	50190025301R	200

ORDER DATA FOR VERSION PIN LENGTH (PT) 12.0

Poles	Width (mm)	Article Designation	Article Number	PU
2	8.65	STL190/2-5.75-V-PT12.0-SMD	50190025302R	200

ORDER DATA FOR VERSION PIN LENGTH (PT) 14.4

Poles	Width (mm)	Article Designation	Article Number	PU
2	8.65	STL190/2-5.75-V-PT14.4-SMD	50190025303R	200

ORDER DATA FOR VERSION PIN LENGTH (PT) 16.6

Poles	Width (mm)	Article Designation	Article Number	PU
2	8.65	STL190/2-5.75-V-PT16.6-SMD	50190025304R	200

Spacing 5.0 mm / Spacing 5.08 mm

STL950/..-5.0-V-GREEN
STLZ950/..-5.08-V-GREEN

WIRE SIZES	
solid min	-
solid max	-
stranded min	-
stranded max	-
stranded with ferrule min	-
stranded with ferrule max	-
DIMENSIONS	
Stripped Length	-
PCB Hole Diameter	1.4 mm
MATERIALS	
Contact Pin	Copper Alloy
INSULATING MATERIAL	
Material	PA 6.6
Flammability Class	UL 94 V-0
TEMPERATURES	
Operating Temperature (without mech. load)	-40 °C - 105 °C
WAVE SOLDERING PROCESS	
Soldering Temperature, recommended	260 °C
Peak Soldering Time, recommended	3-4 s
REFLOW PROCESS	
Soldering Temperature, recommended	-
Peak Soldering Time, recommended	-



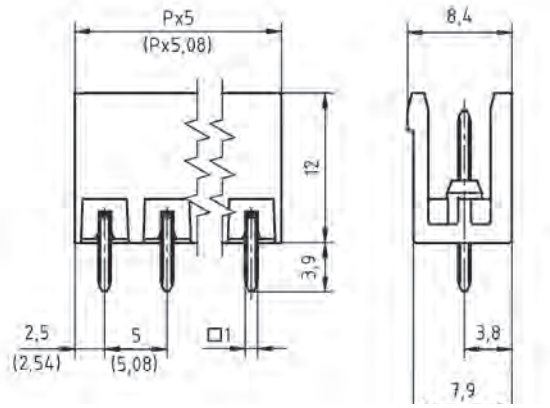

COLOURS[1]

GREEN, RAL 6018		BLACK, RAL 9011	
BASALT GREY, RAL 7012		LIGHT GREY, RAL 7035	
LIGHT GREEN, similar RAL 6018			

COUNTERPARTS (SPACING 5.0 MM)

PCB Terminal Block

AK950 AK955 AK1100 AK1110 AK3950 AK4951

COUNTERPARTS (SPACING 5.08 MM)

Pin Strip / PCB Terminal Block

STLZ950-INV AKZ950 AKZ955 AKZ1100 AKZ1110 AKZ1200 AKZ4951

ORDER DATA (SPACING 5.0 MM)

Poles	Width (mm)	Article Designation	Article Number	PU
2	10.00	STL950/2-5.0-V-GREEN	50950025111F	200
3	15.00	STL950/3-5.0-V-GREEN	50950035111F	200
4	20.00	STL950/4-5.0-V-GREEN	50950045111F	200
5	25.00	STL950/5-5.0-V-GREEN	50950055111E	100
6	30.00	STL950/6-5.0-V-GREEN	50950065111E	100
7	35.00	STL950/7-5.0-V-GREEN	50950075111E	100
8	40.00	STL950/8-5.0-V-GREEN	50950085111D	50
9	45.00	STL950/9-5.0-V-GREEN	50950095111D	50
...	...	...	...	...
24	120.00	STL950/24-5.0-V-GREEN	50950245111D	50

ORDER DATA (SPACING 5.08 MM)

Poles	Width (mm)	Article Designation	Article Number	PU
2	10.16	STLZ950/2-5.08-V-GREEN	50950025131F	200
3	15.24	STLZ950/3-5.08-V-GREEN	50950035131F	200
4	20.32	STLZ950/4-5.08-V-GREEN	50950045131F	200
5	25.40	STLZ950/5-5.08-V-GREEN	50950055131E	100
6	30.48	STLZ950/6-5.08-V-GREEN	50950065131E	100
7	35.56	STLZ950/7-5.08-V-GREEN	50950075131E	100
8	40.64	STLZ950/8-5.08-V-GREEN	50950085131D	50
9	45.72	STLZ950/9-5.08-V-GREEN	50950095131D	50
...	...	...	...	...
24	121.92	STLZ950/24-5.08-V-GREEN	50950245131D	50

ACCESSORIES

	Description	Article Number
	Coding Star CS2-5.0/5.08-RED	50000000024
	Separating Element SE-STL950-GREEN	50950000002

RATINGS

	c UL us			VDE
Usegroup	B	C	D	
Rated Voltage	300 V	150 V	300 V	250 V
Rated Current	15 A	15 A	10 A	12 A
Overvoltage Category				III
Test Voltage	1.6 kV	1.3 kV	1.6 kV	4.0 kV
Pollution Degree				3

[1]Colours according to RAL, there may be variations on colour due to production conditions. Special colours on request.

L'IMPULSION
Retrouvez nous sur
www.limpulsion.fr

STL950/..-5.0-V-P2.6-BK-HT
STLZ950/..-5.08-V-P2.6-BK-HT

Spacing 5.0 mm / Spacing 5.08 mm



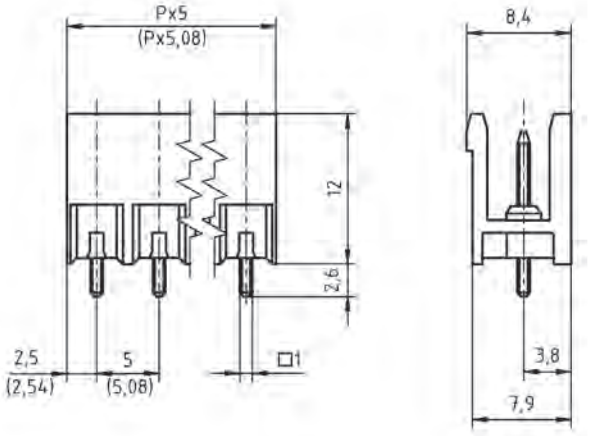

WIRE SIZES	
solid min	-
solid max	-
stranded min	-
stranded max	-
stranded with ferrule min	-
stranded with ferrule max	-
DIMENSIONS	
Stripped Length	-
PCB Hole Diameter	1.4 mm
MATERIALS	
Contact Pin	Copper Alloy
INSULATING MATERIAL	
Material	PPA
Flammability Class	UL 94 V-0
TEMPERATURES	
Operating Temperature (without mech. load)	-40 °C - 105 °C
WAVE SOLDERING PROCESS	
Soldering Temperature, recommended	260 °C
Peak Soldering Time, recommended	3-4 s
REFLOW PROCESS	
Soldering Temperature, recommended	217 °C - 245 °C
Peak Soldering Time, recommended	60 s

COLOURS[1]

BLACK, RAL 9011

COUNTERPARTS (SPACING 5.0 MM)

PCB Terminal Block

AK950 AK955 AK1100 AK1110 AK3950 AK4951

COUNTERPARTS (SPACING 5.08 MM)

Pin Strip / PCB Terminal Block

STLZ950-INV AKZ950 AKZ955 AKZ1100 AKZ1110 AKZ1200 AKZ4951

ACCESSORIES

	Description	Article Number
	Coding Star CS2-5.0/5.08-LIGHT GREY-HT	50000000028

ORDER DATA (SPACING 5.0 MM)

Poles	Width (mm)	Article Designation	Article Number	PU
2	10.00	STL950/2-5.0-V-P2.6-BK-HT	50950025397F	200
3	15.00	STL950/3-5.0-V-P2.6-BK-HT	50950035397F	200
4	20.00	STL950/4-5.0-V-P2.6-BK-HT	50950045397F	200
5	25.00	STL950/5-5.0-V-P2.6-BK-HT	50950055397E	100
6	30.00	STL950/6-5.0-V-P2.6-BK-HT	50950065397E	100
7	35.00	STL950/7-5.0-V-P2.6-BK-HT	50950075397E	100
8	40.00	STL950/8-5.0-V-P2.6-BK-HT	50950085397D	50
9	45.00	STL950/9-5.0-V-P2.6-BK-HT	50950095397D	50
...	...	...	...	...
12	60.00	STL950/12-5.0-V-P2.6-BK-HT	50950125397D	50

RATINGS

	c UL us			VDE
Usegroup	B	C	D	
Rated Voltage	300 V	150 V	300 V	250 V
Rated Current	15 A	15 A	10 A	12 A
Overvoltage Category				III
Test Voltage	1.6 kV	1.3 kV	1.6 kV	4.0 kV
Pollution Degree				3

ORDER DATA (SPACING 5.08 MM)

Poles	Width (mm)	Article Designation	Article Number	PU
2	10.16	STLZ950/2-5.08-V-P2.6-BK-HT	50950025377F	200
3	15.24	STLZ950/3-5.08-V-P2.6-BK-HT	50950035377F	200
4	20.32	STLZ950/4-5.08-V-P2.6-BK-HT	50950045377F	200
5	25.40	STLZ950/5-5.08-V-P2.6-BK-HT	50950055377E	100
6	30.48	STLZ950/6-5.08-V-P2.6-BK-HT	50950065377E	100
7	35.56	STLZ950/7-5.08-V-P2.6-BK-HT	50950075377E	100
8	40.64	STLZ950/8-5.08-V-P2.6-BK-HT	50950085377D	50
9	45.72	STLZ950/9-5.08-V-P2.6-BK-HT	50950095377D	50
...	...	...	...	...
12	60.96	STLZ950/12-5.08-V-P2.6-BK-HT	50950125377D	50

[1]Colours according to RAL, there may be variations on colour due to production conditions.

Spacing 5.0 mm / Spacing 5.08 mm

STL950/..-5.0-V-P2.6-BK-HT
STLZ950/..-5.08-V-P2.6-BK-HT

WIRE SIZES	
solid min	-
solid max	-
stranded min	-
stranded max	-
stranded with ferrule min	-
stranded with ferrule max	-
DIMENSIONS	
Stripped Length	-
PCB Hole Diameter	1.4 mm
MATERIALS	
Contact Pin	Copper Alloy
INSULATING MATERIAL	
Material	PPA
Flammability Class	UL 94 V-0
TEMPERATURES	
Operating Temperature (without mech. load)	-40 °C - 105 °C
WAVE SOLDERING PROCESS	
Soldering Temperature, recommended	260 °C
Peak Soldering Time, recommended	3-4 s
REFLOW PROCESS	
Soldering Temperature, recommended	217 °C - 245 °C
Peak Soldering Time, recommended	60 s



Technical Drawing see page 268

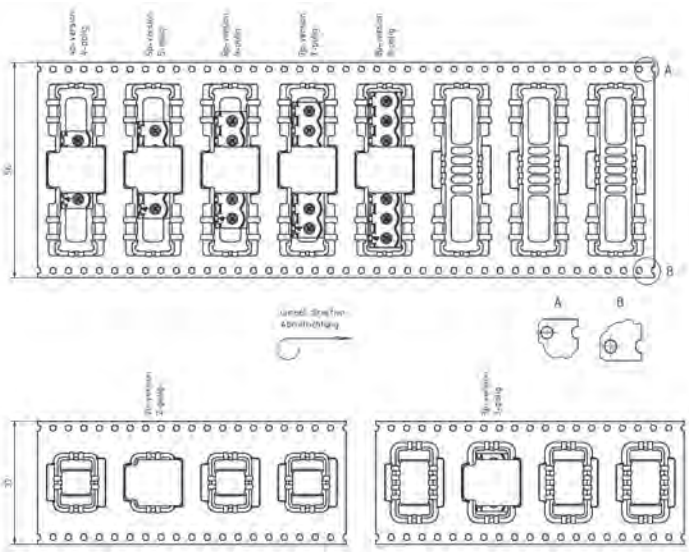

COLOURS[1]

BLACK, RAL 9011

COUNTERPARTS (SPACING 5.0 MM)

PCB Terminal Block

AK950 AK955 AK1100 AK1110 AK3950 AK4951

COUNTERPARTS (SPACING 5.08 MM)

Pin Strip / PCB Terminal Block

STLZ950-INV AKZ950 AKZ955 AKZ1100 AKZ1110 AKZ1200 AKZ4951

TAPE-ON-REEL

Poles	Reel (RD/")	Width (R/mm)	Pitch (RP/mm)	Pieces (PCS)
2-3	13	32	20	140
4-8	13	56	20	140

ACCESSORIES



Description	Article Number
Coding Star CS2-5.0/5.08-LIGHT GREY-HT	50000000028

ORDER DATA (SPACING 5.0 MM)

Poles	Width (mm)	Article Designation	Article Number	PU
2	10.00	STL950/2-5.0-V-P2.6-BK-HT	50950025397R	140
3	15.00	STL950/3-5.0-V-P2.6-BK-HT	50950035397R	140
4	20.00	STL950/4-5.0-V-P2.6-BK-HT	50950045397R	140
5	25.00	STL950/5-5.0-V-P2.6-BK-HT	50950055397R	140
6	30.00	STL950/6-5.0-V-P2.6-BK-HT	50950065397R	140
7	35.00	STL950/7-5.0-V-P2.6-BK-HT	50950075397R	140
8	40.00	STL950/8-5.0-V-P2.6-BK-HT	50950085397R	140

ORDER DATA (SPACING 5.08 MM)

Poles	Width (mm)	Article Designation	Article Number	PU
2	10.16	STLZ950/2-5.08-V-P2.6-BK-HT	50950025377R	140
3	15.24	STLZ950/3-5.08-V-P2.6-BK-HT	50950035377R	140
4	20.32	STLZ950/4-5.08-V-P2.6-BK-HT	50950045377R	140
5	25.40	STLZ950/5-5.08-V-P2.6-BK-HT	50950055377R	140
6	30.48	STLZ950/6-5.08-V-P2.6-BK-HT	50950065377R	140
7	35.56	STLZ950/7-5.08-V-P2.6-BK-HT	50950075377R	140
8	40.64	STLZ950/8-5.08-V-P2.6-BK-HT	50950085377R	140

RATINGS

	c UL us			VDE
Usegroup	B	C	D	
Rated Voltage	300 V	150 V	300 V	250 V
Rated Current	15 A	15 A	10 A	12 A
Overvoltage Category				III
Test Voltage	1.6 kV	1.3 kV	1.6 kV	4.0 kV
Pollution Degree				3

[1]Colours according to RAL, there may be variations on colour due to production conditions.

L'IMPULSION
Retrouvez nous sur
www.limpulsion.fr

STL950/..-5.0-V-GREEN-HC
STLZ950/..-5.08-V-GREEN-HC

Spacing 5.0 mm / Spacing 5.08 mm



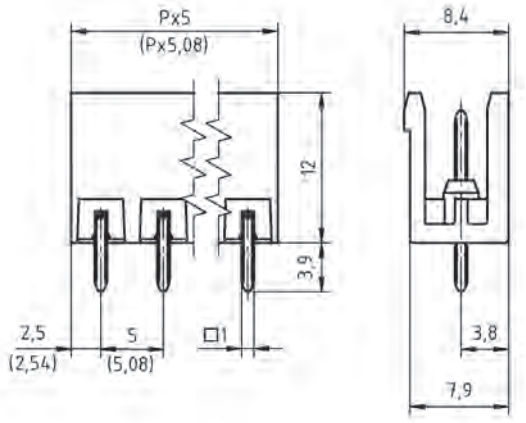

WIRE SIZES	
solid min	-
solid max	-
stranded min	-
stranded max	-
stranded with ferrule min	-
stranded with ferrule max	-
DIMENSIONS	
Stripped Length	-
PCB Hole Diameter	1.4 mm
MATERIALS	
Contact Pin	Copper Alloy
INSULATING MATERIAL	
Material	PA 6.6
Flammability Class	UL 94 V-0
TEMPERATURES	
Operating Temperature (without mech. load)	-40 °C - 105 °C
WAVE SOLDERING PROCESS	
Soldering Temperature, recommended	260 °C
Peak Soldering Time, recommended	3-4 s
REFLOW PROCESS	
Soldering Temperature, recommended	-
Peak Soldering Time, recommended	-

COLOURS[1]

GREEN, RAL 6018	BLACK, RAL 9011
PEBBLE GREY, RAL 7032	LIGHT GREEN, similar RAL 6018

COUNTERPARTS (SPACING 5.0 MM)

PCB Terminal Block

AK950

COUNTERPARTS (SPACING 5.08 MM)

PCB Terminal Block

AKZ950

ACCESSORIES

	Description	Article Number
	Coding Star CS2-5.0/5.08-RED	50000000024
	Separating Element SE-STL950-GREEN	50950000002

RATINGS

		c UL us		VDE
Usegroup	B	C	D	
Rated Voltage	300 V	150 V	300 V	250 V
Rated Current	16 A	16 A	10 A	16 A
Overvoltage Category				III
Test Voltage	1.6 kV	1.3 kV	1.6 kV	4.0 kV
Pollution Degree				3

ORDER DATA (SPACING 5.0 MM)

Poles	Width (mm)	Article Designation	Article Number	PU
2	10.00	STL950/2-5.0-V-GREEN-HC	50950025119F	200
3	15.00	STL950/3-5.0-V-GREEN-HC	50950035119F	200
4	20.00	STL950/4-5.0-V-GREEN-HC	50950045119F	200
5	25.00	STL950/5-5.0-V-GREEN-HC	50950055119E	100
6	30.00	STL950/6-5.0-V-GREEN-HC	50950065119E	100
7	35.00	STL950/7-5.0-V-GREEN-HC	50950075119E	100
8	40.00	STL950/8-5.0-V-GREEN-HC	50950085119D	50
9	45.00	STL950/9-5.0-V-GREEN-HC	50950095119D	50
...	...	...	...	...
12	60.00	STL950/12-5.0-V-GREEN-HC	50950125119D	50

ORDER DATA (SPACING 5.08 MM)

Poles	Width (mm)	Article Designation	Article Number	PU
2	10.16	STLZ950/2-5.08-V-GREEN-HC	50950025139F	200
3	15.24	STLZ950/3-5.08-V-GREEN-HC	50950035139F	200
4	20.32	STLZ950/4-5.08-V-GREEN-HC	50950045139F	200
5	25.40	STLZ950/5-5.08-V-GREEN-HC	50950055139E	100
6	30.48	STLZ950/6-5.08-V-GREEN-HC	50950065139E	100
7	35.56	STLZ950/7-5.08-V-GREEN-HC	50950075139E	100
8	40.64	STLZ950/8-5.08-V-GREEN-HC	50950085139D	50
9	45.72	STLZ950/9-5.08-V-GREEN-HC	50950095139D	50
...	...	...	...	...
12	60.96	STLZ950/12-5.08-V-GREEN-HC	50950125139D	50

[1]Colours according to RAL, there may be variations on colour due to production conditions. Special colours on request.

Spacing 5.0 mm / Spacing 5.08 mm

STL950/..-5.0-V-P2.6-BK-HC-HT
STLZ950/..-5.08-V-P2.6-BK-HC-HT

WIRE SIZES	
solid min	-
solid max	-
stranded min	-
stranded max	-
stranded with ferrule min	-
stranded with ferrule max	-
DIMENSIONS	
Stripped Length	-
PCB Hole Diameter	1.4 mm
MATERIALS	
Contact Pin	Copper Alloy
INSULATING MATERIAL	
Material	PPA
Flammability Class	UL 94 V-0
TEMPERATURES	
Operating Temperature (without mech. load)	-40 °C - 105 °C
WAVE SOLDERING PROCESS	
Soldering Temperature, recommended	260 °C
Peak Soldering Time, recommended	3-4 s
REFLOW PROCESS	
Soldering Temperature, recommended	217 °C - 245 °C
Peak Soldering Time, recommended	60 s



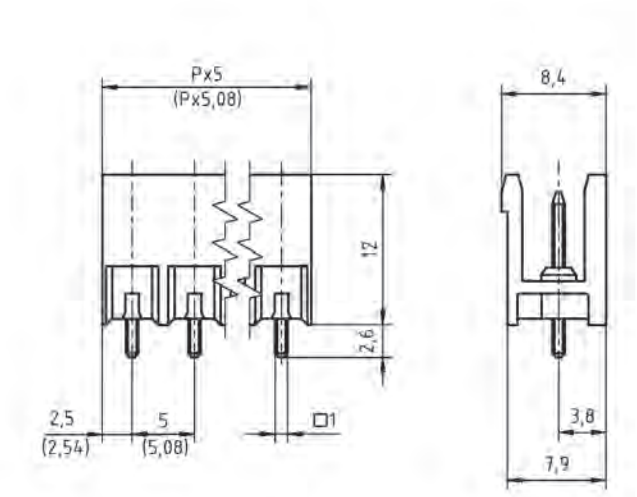

COLOURS[1]	
	BLACK, RAL 9011

COUNTERPARTS (SPACING 5.0 MM)
PCB Terminal Block
AK950

COUNTERPARTS (SPACING 5.08 MM)
PCB Terminal Block
AKZ950

ORDER DATA (SPACING 5.0 MM)

Poles	Width (mm)	Article Designation	Article Number	PU
2	10.00	STL950/2-5.0-V-P2.6-BK-HC-HT	50950025389F	200
3	15.00	STL950/3-5.0-V-P2.6-BK-HC-HT	50950035389F	200
4	20.00	STL950/4-5.0-V-P2.6-BK-HC-HT	50950045389F	200
5	25.00	STL950/5-5.0-V-P2.6-BK-HC-HT	50950055389E	100
6	30.00	STL950/6-5.0-V-P2.6-BK-HC-HT	50950065389E	100
7	35.00	STL950/7-5.0-V-P2.6-BK-HC-HT	50950075389E	100
8	40.00	STL950/8-5.0-V-P2.6-BK-HC-HT	50950085389D	50
9	45.00	STL950/9-5.0-V-P2.6-BK-HC-HT	50950095389D	50
...	...	...	...	...
12	60.00	STL950/12-5.0-V-P2.6-BK-HC-HT	50950125389D	50

ORDER DATA (SPACING 5.08 MM)

Poles	Width (mm)	Article Designation	Article Number	PU
2	10.16	STLZ950/2-5.08-V-P2.6-BK-HC-HT	50950025379F	200
3	15.24	STLZ950/3-5.08-V-P2.6-BK-HC-HT	50950035379F	200
4	20.32	STLZ950/4-5.08-V-P2.6-BK-HC-HT	50950045379F	200
5	25.40	STLZ950/5-5.08-V-P2.6-BK-HC-HT	50950055379E	100
6	30.48	STLZ950/6-5.08-V-P2.6-BK-HC-HT	50950065379E	100
7	35.56	STLZ950/7-5.08-V-P2.6-BK-HC-HT	50950075379E	100
8	40.64	STLZ950/8-5.08-V-P2.6-BK-HC-HT	50950085379D	50
9	45.72	STLZ950/9-5.08-V-P2.6-BK-HC-HT	50950095379D	50
...	...	...	...	...
12	60.96	STLZ950/12-5.08-V-P2.6-BK-HC-HT	50950125379D	50

ACCESSORIES

	Description	Article Number
	Coding Star CS2-5.0/5.08-LIGHT GREY-HT	50000000028

RATINGS	c UL us			VDE
Usegroup	B	C	D	
Rated Voltage	300 V	150 V	300 V	250 V
Rated Current	16 A	16 A	10 A	16 A
Overvoltage Category				III
Test Voltage	1.6 kV	1.3 kV	1.6 kV	4.0 kV
Pollution Degree				3

[1]Colours according to RAL, there may be variations on colour due to production conditions.

L'IMPULSION
Retrouvez nous sur
www.limpulsion.fr

STL950/..-5.0-V-P2.6-BK-HC-HT
STLZ950/..-5.08-V-P2.6-BK-HC-HT

Spacing 5.0 mm / Spacing 5.08 mm



Technical Drawing see page 271

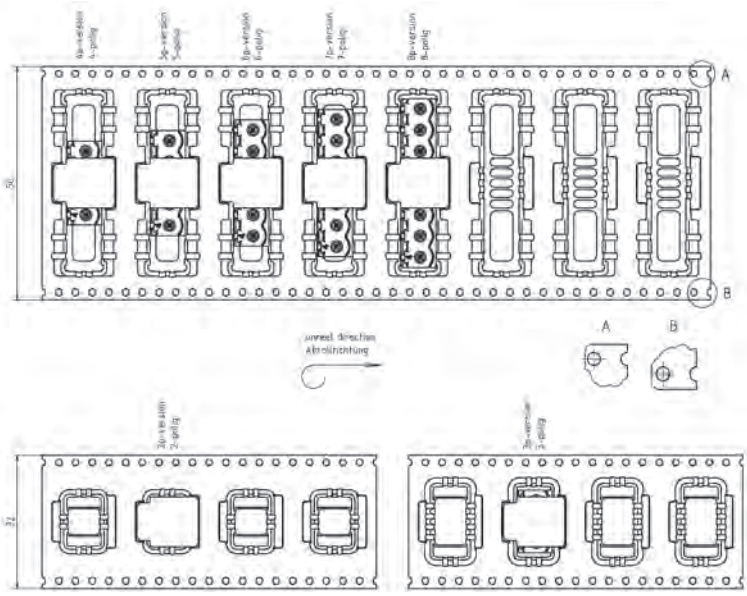

WIRE SIZES	
solid min	-
solid max	-
stranded min	-
stranded max	-
stranded with ferrule min	-
stranded with ferrule max	-
DIMENSIONS	
Stripped Length	-
PCB Hole Diameter	1.4 mm
MATERIALS	
Contact Pin	Copper Alloy
INSULATING MATERIAL	
Material	PPA
Flammability Class	UL 94 V-0
TEMPERATURES	
Operating Temperature (without mech. load)	-40 °C - 105 °C
WAVE SOLDERING PROCESS	
Soldering Temperature, recommended	260 °C
Peak Soldering Time, recommended	3-4 s
REFLOW PROCESS	
Soldering Temperature, recommended	217 °C - 245 °C
Peak Soldering Time, recommended	60 s

COLOURS[1]
BLACK, RAL 9011

COUNTERPARTS (SPACING 5.0 MM)
PCB Terminal Block
AK950

COUNTERPARTS (SPACING 5.08 MM)
PCB Terminal Block
AKZ950

ACCESSORIES

	Description	Article Number
	Coding Star CS2-5.0/5.08-LIGHT GREY-HT	50000000028

TAPE-ON-REEL

Poles	Reel (RD/")	Width (R/mm)	Pitch (RP/mm)	Pieces (PCS)
2-3	13	32	20	140
4-8	13	56	20	140

RATINGS	cULus			VDE
Usegroup	B	C	D	
Rated Voltage	300 V	150 V	300 V	250 V
Rated Current	16 A	16 A	10 A	16 A
Overvoltage Category				III
Test Voltage	1.6 kV	1.3 kV	1.6 kV	4.0 kV
Pollution Degree				3

ORDER DATA (SPACING 5.0 MM)

Poles	Width (mm)	Article Designation	Article Number	PU
2	10.00	STL950/2-5.0-V-P2.6-BK-HC-HT	50950025389R	140
3	15.00	STL950/3-5.0-V-P2.6-BK-HC-HT	50950035389R	140
4	20.00	STL950/4-5.0-V-P2.6-BK-HC-HT	50950045389R	140
5	25.00	STL950/5-5.0-V-P2.6-BK-HC-HT	50950055389R	140
6	30.00	STL950/6-5.0-V-P2.6-BK-HC-HT	50950065389R	140
7	35.00	STL950/7-5.0-V-P2.6-BK-HC-HT	50950075389R	140
8	40.00	STL950/8-5.0-V-P2.6-BK-HC-HT	50950085389R	140

ORDER DATA (SPACING 5.08 MM)

Poles	Width (mm)	Article Designation	Article Number	PU
2	10.16	STLZ950/2-5.08-V-P2.6-BK-HC-HT	50950025379R	140
3	15.24	STLZ950/3-5.08-V-P2.6-BK-HC-HT	50950035379R	140
4	20.32	STLZ950/4-5.08-V-P2.6-BK-HC-HT	50950045379R	140
5	25.40	STLZ950/5-5.08-V-P2.6-BK-HC-HT	50950055379R	140
6	30.48	STLZ950/6-5.08-V-P2.6-BK-HC-HT	50950065379R	140
7	35.56	STLZ950/7-5.08-V-P2.6-BK-HC-HT	50950075379R	140
8	40.64	STLZ950/8-5.08-V-P2.6-BK-HC-HT	50950085379R	140

[1]Colours according to RAL, there may be variations on colour due to production conditions.

Spacing 5.0 mm / Spacing 5.08 mm

STL950/..G-5.0-V-GREEN
STLZ950/..G-5.08-V-GREEN

WIRE SIZES	
solid min	-
solid max	-
stranded min	-
stranded max	-
stranded with ferrule min	-
stranded with ferrule max	-
DIMENSIONS	
Stripped Length	-
PCB Hole Diameter	1.4 mm
MATERIALS	
Contact Pin	Copper Alloy
INSULATING MATERIAL	
Material	PA 6.6
Flammability Class	UL 94 V-0
TEMPERATURES	
Operating Temperature (without mech. load)	-40 °C - 105 °C
WAVE SOLDERING PROCESS	
Soldering Temperature, recommended	260 °C
Peak Soldering Time, recommended	3-4 s
REFLOW PROCESS	
Soldering Temperature, recommended	-
Peak Soldering Time, recommended	-



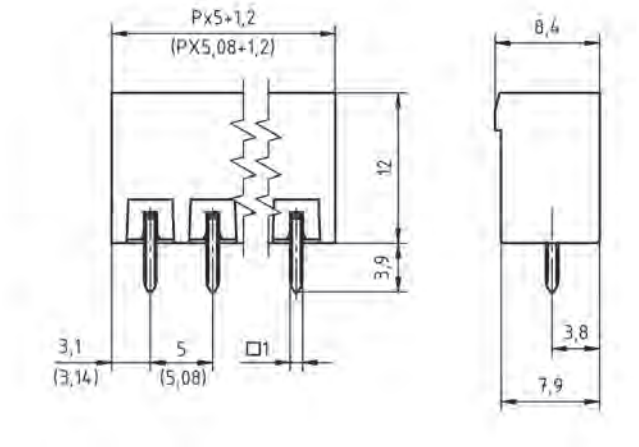

COLOURS[1]

GREEN, RAL 6018		BLACK, RAL 9011	
BASALT GREY, RAL 7012		PEBBLE GREY, RAL 7032	
LIGHT GREY, RAL 7035		LIGHT GREEN, similar RAL 6018	

COUNTERPARTS (SPACING 5.0 MM)

PCB Terminal Block

AK950 AK955 AK1100 AK1110 AK1200 AK3950 AK4951

COUNTERPARTS (SPACING 5.08 MM)

Pin Strip / PCB Terminal Block

STLZ950-INV AKZ950 AKZ955 AKZ1100 AKZ1110 AKZ1200 AKZ4951

ORDER DATA (SPACING 5.0 MM)

Poles	Width (mm)	Article Designation	Article Number	PU
2	11.20	STL950/2G-5.0-V-GREEN	50950025101F	200
3	16.20	STL950/3G-5.0-V-GREEN	50950035101F	200
4	21.20	STL950/4G-5.0-V-GREEN	50950045101F	200
5	26.20	STL950/5G-5.0-V-GREEN	50950055101E	100
6	31.20	STL950/6G-5.0-V-GREEN	50950065101E	100
7	36.20	STL950/7G-5.0-V-GREEN	50950075101E	100
8	41.20	STL950/8G-5.0-V-GREEN	50950085101D	50
9	46.20	STL950/9G-5.0-V-GREEN	50950095101D	50
...	...	...	...	...
24	121.20	STL950/24G-5.0-V-GREEN	50950245101D	50

ORDER DATA (SPACING 5.08 MM)

Poles	Width (mm)	Article Designation	Article Number	PU
2	11.36	STLZ950/2G-5.08-V-GREEN	50950025121F	200
3	16.44	STLZ950/3G-5.08-V-GREEN	50950035121F	200
4	21.52	STLZ950/4G-5.08-V-GREEN	50950045121F	200
5	26.60	STLZ950/5G-5.08-V-GREEN	50950055121E	100
6	31.68	STLZ950/6G-5.08-V-GREEN	50950065121E	100
7	36.76	STLZ950/7G-5.08-V-GREEN	50950075121E	100
8	41.84	STLZ950/8G-5.08-V-GREEN	50950085121D	50
9	46.92	STLZ950/9G-5.08-V-GREEN	50950095121D	50
...	...	...	...	...
24	123.12	STLZ950/24G-5.08-V-GREEN	50950245121D	50

ACCESSORIES

	Description	Article Number
	Coding Star CS2-5.0/5.08-RED	50000000024
	Separating Element SE-STL950-GREEN	50950000002

RATINGS

	cULus			VDE
Usegroup	B	C	D	
Rated Voltage	300 V	150 V	300 V	250 V
Rated Current	15 A	15 A	10 A	12 A
Overvoltage Category				III
Test Voltage	1.6 kV	1.3 kV	1.6 kV	4.0 kV
Pollution Degree				3

[1]Colours according to RAL, there may be variations on colour due to production conditions. Special colours on request.

L'IMPULSION Retrouvez nous sur www.limpulsion.fr

STL950/..G-5.0-V-P2.6-BK-HT
STLZ950/..G-5.08-V-P2.6-BK-HT

Spacing 5.0 mm / Spacing 5.08 mm



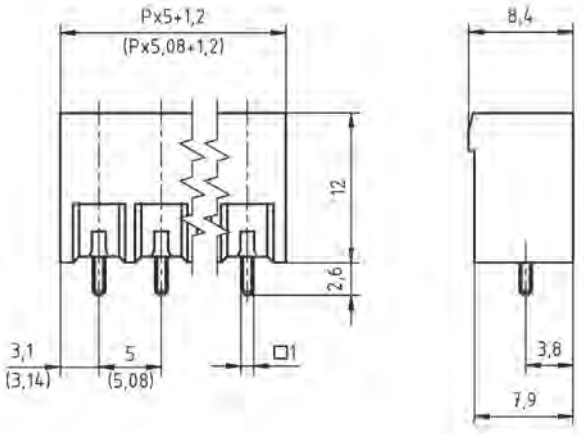

WIRE SIZES	
solid min	-
solid max	-
stranded min	-
stranded max	-
stranded with ferrule min	-
stranded with ferrule max	-
DIMENSIONS	
Stripped Length	-
PCB Hole Diameter	1.4 mm
MATERIALS	
Contact Pin	Copper Alloy
INSULATING MATERIAL	
Material	PPA
Flammability Class	UL 94 V-0
TEMPERATURES	
Operating Temperature (without mech. load)	-40 °C - 105 °C
WAVE SOLDERING PROCESS	
Soldering Temperature, recommended	260 °C
Peak Soldering Time, recommended	3-4 s
REFLOW PROCESS	
Soldering Temperature, recommended	217 °C - 245 °C
Peak Soldering Time, recommended	60 s

COLOURS[1]
BLACK, RAL 9011

COUNTERPARTS (SPACING 5.0 MM)
PCB Terminal Block
AK950 AK955 AK1100 AK1110 AK1200 AK3950 AK4951

COUNTERPARTS (SPACING 5.08 MM)
Pin Strip / PCB Terminal Block
STLZ950-INV AKZ950 AKZ955 AKZ1100 AKZ1110 AKZ1200 AKZ4951

ACCESSORIES

	Description	Article Number
	Coding Star CS2-5.0/5.08-LIGHT GREY-HT	50000000028

ORDER DATA (SPACING 5.0 MM)

Poles	Width (mm)	Article Designation	Article Number	PU
2	11.20	STL950/2G-5.0-V-P2.6-BK-HT	50950025387F	200
3	16.20	STL950/3G-5.0-V-P2.6-BK-HT	50950035387F	200
4	21.20	STL950/4G-5.0-V-P2.6-BK-HT	50950045387F	200
5	26.20	STL950/5G-5.0-V-P2.6-BK-HT	50950055387E	100
6	31.20	STL950/6G-5.0-V-P2.6-BK-HT	50950065387E	100
7	36.20	STL950/7G-5.0-V-P2.6-BK-HT	50950075387E	100
8	41.20	STL950/8G-5.0-V-P2.6-BK-HT	50950085387D	50
9	46.20	STL950/9G-5.0-V-P2.6-BK-HT	50950095387D	50
...	...	...	...	...
12	61.20	STL950/12G-5.0-V-P2.6-BK-HT	50950125387D	50

RATINGS

	c UL us			VDE
Usegroup	B	C	D	
Rated Voltage	300 V	150 V	300 V	250 V
Rated Current	15 A	15 A	10 A	12 A
Overvoltage Category				III
Test Voltage	1.6 kV	1.3 kV	1.6 kV	4.0 kV
Pollution Degree				3

ORDER DATA (SPACING 5.08 MM)

Poles	Width (mm)	Article Designation	Article Number	PU
2	11.36	STLZ950/2G-5.08-V-P2.6-BK-HT	50950025367F	200
3	16.44	STLZ950/3G-5.08-V-P2.6-BK-HT	50950035367F	200
4	21.52	STLZ950/4G-5.08-V-P2.6-BK-HT	50950045367F	200
5	26.60	STLZ950/5G-5.08-V-P2.6-BK-HT	50950055367E	100
6	31.68	STLZ950/6G-5.08-V-P2.6-BK-HT	50950065367E	100
7	36.76	STLZ950/7G-5.08-V-P2.6-BK-HT	50950075367E	100
8	41.84	STLZ950/8G-5.08-V-P2.6-BK-HT	50950085367D	50
9	46.92	STLZ950/9G-5.08-V-P2.6-BK-HT	50950095367D	50
...	...	...	...	...
12	62.16	STLZ950/12G-5.08-V-P2.6-BK-HT	50950125367D	50

[1]Colours according to RAL, there may be variations on colour due to production conditions.

Spacing 5.0 mm / Spacing 5.08 mm

STL950/..G-5.0-V-P2.6-BK-HT
STLZ950/..G-5.08-V-P2.6-BK-HT

WIRE SIZES	
solid min	-
solid max	-
stranded min	-
stranded max	-
stranded with ferrule min	-
stranded with ferrule max	-
DIMENSIONS	
Stripped Length	-
PCB Hole Diameter	1.4 mm
MATERIALS	
Contact Pin	Copper Alloy
INSULATING MATERIAL	
Material	PPA
Flammability Class	UL 94 V-0
TEMPERATURES	
Operating Temperature (without mech. load)	-40 °C - 105 °C
WAVE SOLDERING PROCESS	
Soldering Temperature, recommended	260 °C
Peak Soldering Time, recommended	3-4 s
REFLOW PROCESS	
Soldering Temperature, recommended	217 °C - 245 °C
Peak Soldering Time, recommended	60 s



Technical Drawing see page 274

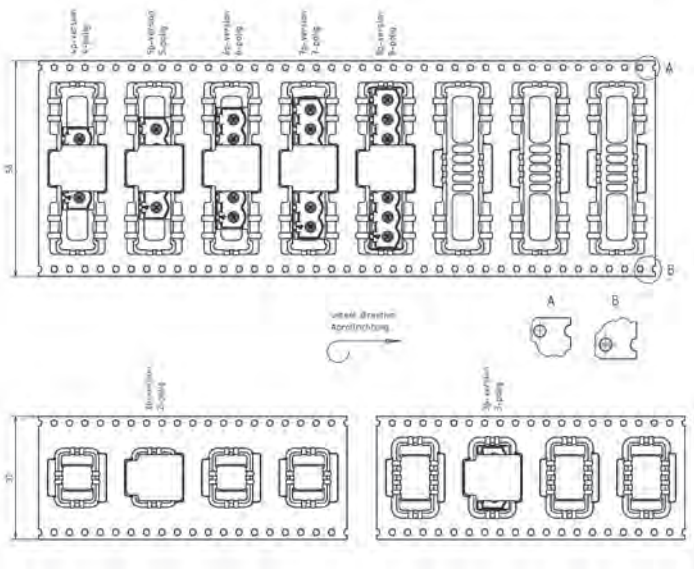

COLOURS[1]

BLACK, RAL 9011

COUNTERPARTS (SPACING 5.0 MM)

PCB Terminal Block

AK950 AK955 AK1100 AK1110 AK1200 AK3950 AK4951

COUNTERPARTS (SPACING 5.08 MM)

Pin Strip / PCB Terminal Block

STLZ950-INV AKZ950 AKZ955 AKZ1100 AKZ1110 AKZ1200 AKZ4951

TAPE-ON-REEL

Poles	Reel (RD/")	Width (R/mm)	Pitch (RP/mm)	Pieces (PCS)
2-3	13	32	20	140
4-8	13	56	20	140

ACCESSORIES



Description	Article Number
Coding Star CS2-5.0/5.08-LIGHT GREY-HT	50000000028

ORDER DATA (SPACING 5.0 MM)

Poles	Width (mm)	Article Designation	Article Number	PU
2	11.20	STL950/2G-5.0-V-P2.6-BK-HT	50950025387R	140
3	16.20	STL950/3G-5.0-V-P2.6-BK-HT	50950035387R	140
4	21.20	STL950/4G-5.0-V-P2.6-BK-HT	50950045387R	140
5	26.20	STL950/5G-5.0-V-P2.6-BK-HT	50950055387R	140
6	31.20	STL950/6G-5.0-V-P2.6-BK-HT	50950065387R	140
7	36.20	STL950/7G-5.0-V-P2.6-BK-HT	50950075387R	140
8	41.20	STL950/8G-5.0-V-P2.6-BK-HT	50950085387R	140

ORDER DATA (SPACING 5.08 MM)

Poles	Width (mm)	Article Designation	Article Number	PU
2	11.36	STLZ950/2G-5.08-V-P2.6-BK-HT	50950025367R	140
3	16.44	STLZ950/3G-5.08-V-P2.6-BK-HT	50950035367R	140
4	21.52	STLZ950/4G-5.08-V-P2.6-BK-HT	50950045367R	140
5	26.60	STLZ950/5G-5.08-V-P2.6-BK-HT	50950055367R	140
6	31.68	STLZ950/6G-5.08-V-P2.6-BK-HT	50950065367R	140
7	36.76	STLZ950/7G-5.08-V-P2.6-BK-HT	50950075367R	140
8	41.84	STLZ950/8G-5.08-V-P2.6-BK-HT	50950085367R	140

RATINGS

	c UL us			VDE
Usegroup	B	C	D	
Rated Voltage	300 V	150 V	300 V	250 V
Rated Current	15 A	15 A	10 A	12 A
Overvoltage Category				III
Test Voltage	1.6 kV	1.3 kV	1.6 kV	4.0 kV
Pollution Degree				3

[1]Colours according to RAL, there may be variations on colour due to production conditions.

L'IMPULSION
Retrouvez nous sur
www.limpulsion.fr

STL950/..G-5.0-V-GREEN-HC
STLZ950/..G-5.08-V-GREEN-HC

Spacing 5.0 mm / Spacing 5.08 mm



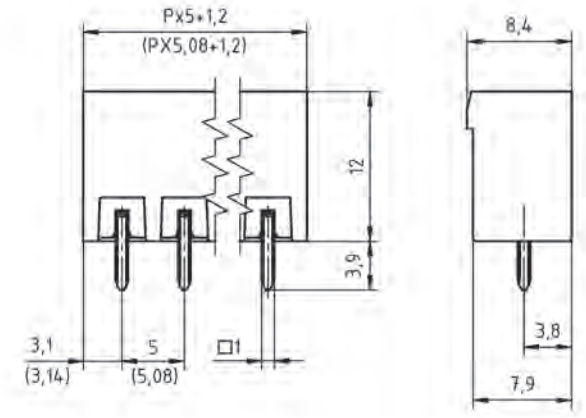

WIRE SIZES	
solid min	-
solid max	-
stranded min	-
stranded max	-
stranded with ferrule min	-
stranded with ferrule max	-
DIMENSIONS	
Stripped Length	-
PCB Hole Diameter	1.4 mm
MATERIALS	
Contact Pin	Copper Alloy
INSULATING MATERIAL	
Material	PA 6.6
Flammability Class	UL 94 V-0
TEMPERATURES	
Operating Temperature (without mech. load)	-40 °C - 105 °C
WAVE SOLDERING PROCESS	
Soldering Temperature, recommended	260 °C
Peak Soldering Time, recommended	3-4 s
REFLOW PROCESS	
Soldering Temperature, recommended	-
Peak Soldering Time, recommended	-

COLOURS[1]

GREEN, RAL 6018	BLACK, RAL 9011
PEBBLE GREY, RAL 7032	LIGHT GREEN, similar RAL 6018

COUNTERPARTS (SPACING 5.0 MM)

PCB Terminal Block
AK950

COUNTERPARTS (SPACING 5.08 MM)

PCB Terminal Block
AKZ950

ACCESSORIES

	Description	Article Number
	Coding Star CS2-5.0/5.08-RED	50000000024
	Separating Element SE-STL950-GREEN	50950000002

RATINGS

	cULus			VDE
Usegroup	B	C	D	
Rated Voltage	300 V	150 V	300 V	250 V
Rated Current	16 A	16 A	10 A	16 A
Overvoltage Category				III
Test Voltage	1.6 kV	1.3 kV	1.6 kV	4.0 kV
Pollution Degree				3

ORDER DATA (SPACING 5.0 MM)

Poles	Width (mm)	Article Designation	Article Number	PU
2	11.20	STL950/2G-5.0-V-GREEN-HC	50950025109F	200
3	16.20	STL950/3G-5.0-V-GREEN-HC	50950035109F	200
4	21.20	STL950/4G-5.0-V-GREEN-HC	50950045109F	200
5	26.20	STL950/5G-5.0-V-GREEN-HC	50950055109E	100
6	31.20	STL950/6G-5.0-V-GREEN-HC	50950065109E	100
7	36.20	STL950/7G-5.0-V-GREEN-HC	50950075109E	100
8	41.20	STL950/8G-5.0-V-GREEN-HC	50950085109D	50
9	46.20	STL950/9G-5.0-V-GREEN-HC	50950095109D	50
...	...	...	...	...
12	61.20	STL950/12G-5.0-V-GREEN-HC	50950125109D	50

ORDER DATA (SPACING 5.08 MM)

Poles	Width (mm)	Article Designation	Article Number	PU
2	11.36	STLZ950/2G-5.08-V-GREEN-HC	50950025129F	200
3	16.44	STLZ950/3G-5.08-V-GREEN-HC	50950035129F	200
4	21.52	STLZ950/4G-5.08-V-GREEN-HC	50950045129F	200
5	26.60	STLZ950/5G-5.08-V-GREEN-HC	50950055129E	100
6	31.68	STLZ950/6G-5.08-V-GREEN-HC	50950065129E	100
7	36.76	STLZ950/7G-5.08-V-GREEN-HC	50950075129E	100
8	41.84	STLZ950/8G-5.08-V-GREEN-HC	50950085129D	50
9	46.92	STLZ950/9G-5.08-V-GREEN-HC	50950095129D	50
...	...	...	...	...
12	62.16	STLZ950/12G-5.08-V-GREEN-HC	50950125129D	50

[1]Colours according to RAL, there may be variations on colour due to production conditions. Special colours on request.

Spacing 5.0 mm / Spacing 5.08 mm

STL950/..G-5.0-V-P2.6-BK-HC-HT
STLZ950/..G-5.08-V-P2.6-BK-HC-HT

WIRE SIZES	
solid min	-
solid max	-
stranded min	-
stranded max	-
stranded with ferrule min	-
stranded with ferrule max	-
DIMENSIONS	
Stripped Length	-
PCB Hole Diameter	1.4 mm
MATERIALS	
Contact Pin	Copper Alloy
INSULATING MATERIAL	
Material	PPA
Flammability Class	UL 94 V-0
TEMPERATURES	
Operating Temperature (without mech. load)	-40 °C - 105 °C
WAVE SOLDERING PROCESS	
Soldering Temperature, recommended	260 °C
Peak Soldering Time, recommended	3-4 s
REFLOW PROCESS	
Soldering Temperature, recommended	217 °C - 245 °C
Peak Soldering Time, recommended	60 s



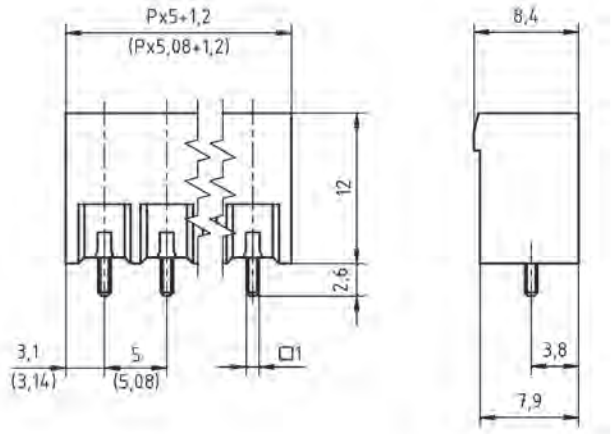

COLOURS[1]	
	BLACK, RAL 9011

COUNTERPARTS (SPACING 5.0 MM)
PCB Terminal Block
AK950

COUNTERPARTS (SPACING 5.08 MM)
PCB Terminal Block
AKZ950

ORDER DATA (SPACING 5.0 MM)

Poles	Width (mm)	Article Designation	Article Number	PU
2	11.20	STL950/2G-5.0-V-P2.6-BK-HC-HT	50950025388F	200
3	16.20	STL950/3G-5.0-V-P2.6-BK-HC-HT	50950035388F	200
4	21.20	STL950/4G-5.0-V-P2.6-BK-HC-HT	50950045388F	200
5	26.20	STL950/5G-5.0-V-P2.6-BK-HC-HT	50950055388E	100
6	31.20	STL950/6G-5.0-V-P2.6-BK-HC-HT	50950065388E	100
7	36.20	STL950/7G-5.0-V-P2.6-BK-HC-HT	50950075388E	100
8	41.20	STL950/8G-5.0-V-P2.6-BK-HC-HT	50950085388D	50
9	46.20	STL950/9G-5.0-V-P2.6-BK-HC-HT	50950095388D	50
...	...	...	...	...
12	61.20	STL950/12G-5.0-V-P2.6-BK-HC-HT	50950125388D	50

ORDER DATA (SPACING 5.08 MM)

Poles	Width (mm)	Article Designation	Article Number	PU
2	11.36	STLZ950/2G-5.08-V-P2.6-BK-HC-HT	50950025368F	200
3	16.44	STLZ950/3G-5.08-V-P2.6-BK-HC-HT	50950035368F	200
4	21.52	STLZ950/4G-5.08-V-P2.6-BK-HC-HT	50950045368F	200
5	26.60	STLZ950/5G-5.08-V-P2.6-BK-HC-HT	50950055368E	100
6	31.68	STLZ950/6G-5.08-V-P2.6-BK-HC-HT	50950065368E	100
7	36.76	STLZ950/7G-5.08-V-P2.6-BK-HC-HT	50950075368E	100
8	41.84	STLZ950/8G-5.08-V-P2.6-BK-HC-HT	50950085368D	50
9	46.92	STLZ950/9G-5.08-V-P2.6-BK-HC-HT	50950095368D	50
...	...	...	...	...
12	62.16	STLZ950/12G-5.08-V-P2.6-BK-HC-HT	50950125368D	50

ACCESSORIES

	Description	Article Number
	Coding Star CS2-5.0/5.08-LIGHT GREY-HT	50000000028

RATINGS	c UL us			VDE
Usegroup	B	C	D	
Rated Voltage	300 V	150 V	300 V	250 V
Rated Current	16 A	16 A	10 A	16 A
Overvoltage Category				III
Test Voltage	1.6 kV	1.3 kV	1.6 kV	4.0 kV
Pollution Degree				3

[1]Colours according to RAL, there may be variations on colour due to production conditions.

L'IMPULSION
Retrouvez nous sur
www.limpulsion.fr

STL950/..G-5.0-V-P2.6-BK-HC-HT
STLZ950/..G-5.08-V-P2.6-BK-HC-HT

Spacing 5.0 mm / Spacing 5.08 mm



Technical Drawing see page 277

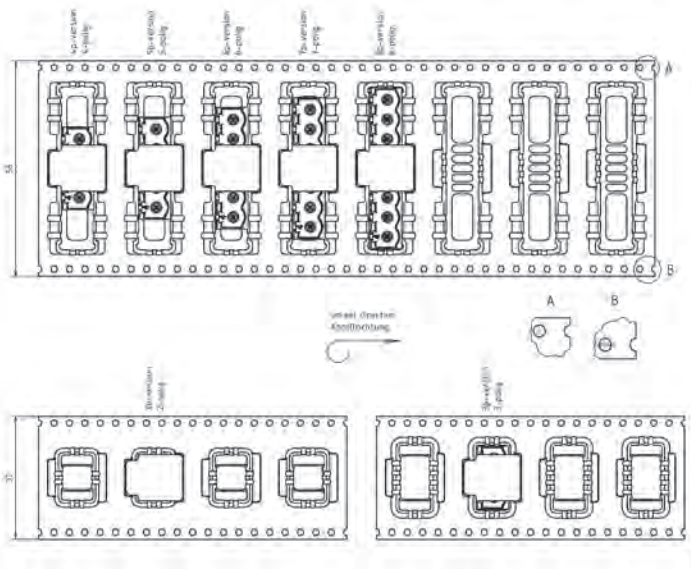

WIRE SIZES	
solid min	-
solid max	-
stranded min	-
stranded max	-
stranded with ferrule min	-
stranded with ferrule max	-
DIMENSIONS	
Stripped Length	-
PCB Hole Diameter	1.4 mm
MATERIALS	
Contact Pin	Copper Alloy
INSULATING MATERIAL	
Material	PPA
Flammability Class	UL 94 V-0
TEMPERATURES	
Operating Temperature (without mech. load)	-40 °C - 105 °C
WAVE SOLDERING PROCESS	
Soldering Temperature, recommended	260 °C
Peak Soldering Time, recommended	3-4 s
REFLOW PROCESS	
Soldering Temperature, recommended	217 °C - 245 °C
Peak Soldering Time, recommended	60 s

COLOURS[1]
BLACK, RAL 9011

COUNTERPARTS (SPACING 5.0 MM)
PCB Terminal Block
AK950

COUNTERPARTS (SPACING 5.08 MM)
PCB Terminal Block
AKZ950

ACCESSORIES

	Description	Article Number
	Coding Star CS2-5.0/5.08-LIGHT GREY-HT	50000000028

TAPE-ON-REEL

Poles	Reel (RD/")	Width (R/mm)	Pitch (RP/mm)	Pieces (PCS)
2-3	13	32	20	140
4-8	13	56	20	140

RATINGS

	c UL us			VDE
Usegroup	B	C	D	
Rated Voltage	300 V	150 V	300 V	250 V
Rated Current	16 A	16 A	10 A	16 A
Overvoltage Category				III
Test Voltage	1.6 kV	1.3 kV	1.6 kV	4.0 kV
Pollution Degree				3

ORDER DATA (SPACING 5.0 MM)

Poles	Width (mm)	Article Designation	Article Number	PU
2	11.20	STL950/2G-5.0-V-P2.6-BK-HC-HT	50950025388R	140
3	16.20	STL950/3G-5.0-V-P2.6-BK-HC-HT	50950035388R	140
4	21.20	STL950/4G-5.0-V-P2.6-BK-HC-HT	50950045388R	140
5	26.20	STL950/5G-5.0-V-P2.6-BK-HC-HT	50950055388R	140
6	31.20	STL950/6G-5.0-V-P2.6-BK-HC-HT	50950065388R	140
7	36.20	STL950/7G-5.0-V-P2.6-BK-HC-HT	50950075388R	140
8	41.20	STL950/8G-5.0-V-P2.6-BK-HC-HT	50950085388R	140

ORDER DATA (SPACING 5.08 MM)

Poles	Width (mm)	Article Designation	Article Number	PU
2	11.36	STLZ950/2G-5.08-V-P2.6-BK-HC-HT	50950025368R	140
3	16.44	STLZ950/3G-5.08-V-P2.6-BK-HC-HT	50950035368R	140
4	21.52	STLZ950/4G-5.08-V-P2.6-BK-HC-HT	50950045368R	140
5	26.60	STLZ950/5G-5.08-V-P2.6-BK-HC-HT	50950055368R	140
6	31.68	STLZ950/6G-5.08-V-P2.6-BK-HC-HT	50950065368R	140
7	36.76	STLZ950/7G-5.08-V-P2.6-BK-HC-HT	50950075368R	140
8	41.84	STLZ950/8G-5.08-V-P2.6-BK-HC-HT	50950085368R	140

[1]Colours according to RAL, there may be variations on colour due to production conditions.

Spacing 5.0 mm / Spacing 5.08 mm

STL950/..F-5.0-V-GREEN
STLZ950/..F-5.08-V-GREEN

WIRE SIZES	
solid min	-
solid max	-
stranded min	-
stranded max	-
stranded with ferrule min	-
stranded with ferrule max	-
DIMENSIONS	
Stripped Length	-
PCB Hole Diameter	1.4 mm
MATERIALS	
Thread Insert, Flange	Brass
Contact Pin	Copper Alloy
INSULATING MATERIAL	
Material	PA 6.6
Flammability Class	UL 94 V-0
TEMPERATURES	
Operating Temperature (without mech. load)	-40 °C - 105 °C
WAVE SOLDERING PROCESS	
Soldering Temperature, recommended	260 °C
Peak Soldering Time, recommended	3-4 s
REFLOW PROCESS	
Soldering Temperature, recommended	-
Peak Soldering Time, recommended	-



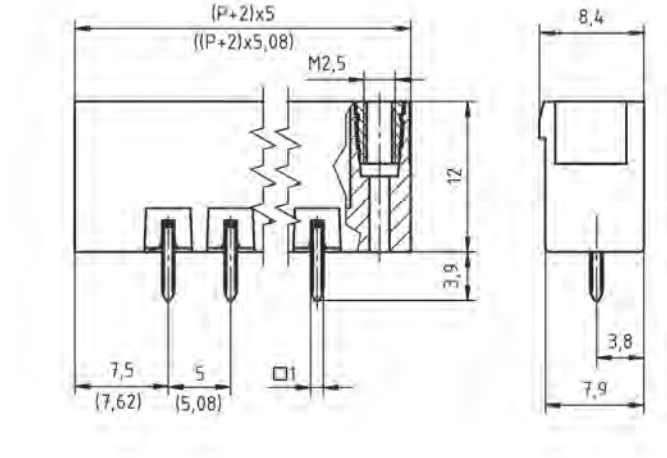

COLOURS[1]

	GREEN, RAL 6018		BASALT GREY, RAL 7012
	LIGHT GREEN, similar RAL 6018		

COUNTERPARTS (SPACING 5.0 MM)

PCB Terminal Block

AK950 AK1200 AK4951

COUNTERPARTS (SPACING 5.08 MM)

PCB Terminal Block

AKZ950 AKZ1100 AKZ1110 AKZ1200 AKZ4951

ORDER DATA (SPACING 5.0 MM)

Poles	Width (mm)	Article Designation	Article Number	PU
2	20.00	STL950/2F-5.0-V-GREEN	50950026101E	100
3	25.00	STL950/3F-5.0-V-GREEN	50950036101E	100
4	30.00	STL950/4F-5.0-V-GREEN	50950046101E	100
5	35.00	STL950/5F-5.0-V-GREEN	50950056101E	100
6	40.00	STL950/6F-5.0-V-GREEN	50950066101D	50
7	45.00	STL950/7F-5.0-V-GREEN	50950076101D	50
8	50.00	STL950/8F-5.0-V-GREEN	50950086101D	50
9	55.00	STL950/9F-5.0-V-GREEN	50950096101D	50
...	...	...	...	...
24	130.00	STL950/24F-5.0-V-GREEN	50950246101D	50

ORDER DATA (SPACING 5.08 MM)

Poles	Width (mm)	Article Designation	Article Number	PU
2	20.32	STLZ950/2F-5.08-V-GREEN	50950026121E	100
3	25.40	STLZ950/3F-5.08-V-GREEN	50950036121E	100
4	30.48	STLZ950/4F-5.08-V-GREEN	50950046121E	100
5	35.56	STLZ950/5F-5.08-V-GREEN	50950056121E	100
6	40.64	STLZ950/6F-5.08-V-GREEN	50950066121D	50
7	45.72	STLZ950/7F-5.08-V-GREEN	50950076121D	50
8	50.80	STLZ950/8F-5.08-V-GREEN	50950086121D	50
9	55.88	STLZ950/9F-5.08-V-GREEN	50950096121D	50
...	...	...	...	...
24	132.08	STLZ950/24F-5.08-V-GREEN	50950246121D	50

ACCESSORIES

	Description	Article Number
	Coding Star CS2-5.0/5.08-RED	50000000024
	Separating Element SE-STL950-GREEN	50950000002

RATINGS

	c UL us			VDE
Usegroup	B	C	D	
Rated Voltage	300 V	150 V	300 V	250 V
Rated Current	15 A	15 A	10 A	12 A
Overvoltage Category				III
Test Voltage	1.6 kV	1.3 kV	1.6 kV	4.0 kV
Pollution Degree				3

[1]Colours according to RAL, there may be variations on colour due to production conditions. Special colours on request.

L'IMPULSION
Retrouvez nous sur
www.limpulsion.fr

STL950/..F-5.0-V-P2.6-BK-HT
STLZ950/..F-5.08-V-P2.6-BK-HT

Spacing 5.0 mm / Spacing 5.08 mm



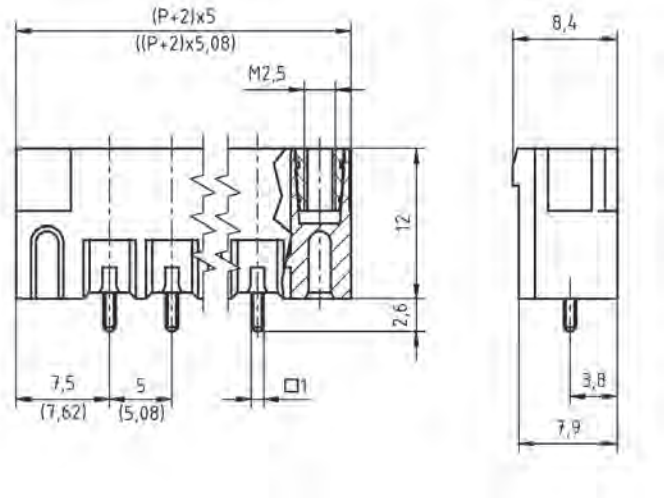

WIRE SIZES	
solid min	-
solid max	-
stranded min	-
stranded max	-
stranded with ferrule min	-
stranded with ferrule max	-
DIMENSIONS	
Stripped Length	-
PCB Hole Diameter	1.4 mm
MATERIALS	
Thread Insert, Flange	Brass
Contact Pin	Copper Alloy
INSULATING MATERIAL	
Material	PPA
Flammability Class	UL 94 V-0
TEMPERATURES	
Operating Temperature (without mech. load)	-40 °C - 105 °C
WAVE SOLDERING PROCESS	
Soldering Temperature, recommended	260 °C
Peak Soldering Time, recommended	3-4 s
REFLOW PROCESS	
Soldering Temperature, recommended	217 °C - 245 °C
Peak Soldering Time, recommended	60 s

COLOURS[1]

BLACK, RAL 9011

COUNTERPARTS (SPACING 5.0 MM)

PCB Terminal Block

AK950 AK1200 AK4951

COUNTERPARTS (SPACING 5.08 MM)

PCB Terminal Block

AKZ950 AKZ1100 AKZ1110 AKZ1200 AKZ4951

ACCESSORIES

	Description	Article Number
	Coding Star CS2-5.0/5.08-LIGHT GREY-HT	50000000028

ORDER DATA (SPACING 5.0 MM)

Poles	Width (mm)	Article Designation	Article Number	PU
2	20.00	STL950/2F-5.0-V-P2.6-BK-HT	50950026387E	100
3	25.00	STL950/3F-5.0-V-P2.6-BK-HT	50950036387E	100
4	30.00	STL950/4F-5.0-V-P2.6-BK-HT	50950046387E	100
5	35.00	STL950/5F-5.0-V-P2.6-BK-HT	50950056387E	100
6	40.00	STL950/6F-5.0-V-P2.6-BK-HT	50950066387D	50
7	45.00	STL950/7F-5.0-V-P2.6-BK-HT	50950076387D	50
8	50.00	STL950/8F-5.0-V-P2.6-BK-HT	50950086387D	50
9	55.00	STL950/9F-5.0-V-P2.6-BK-HT	50950096387D	50
...	...	...	...	...
12	70.00	STL950/12F-5.0-V-P2.6-BK-HT	50950126387D	50

RATINGS

	c UL us			VDE
Usegroup	B	C	D	
Rated Voltage	300 V	150 V	300 V	250 V
Rated Current	15 A	15 A	10 A	12 A
Overvoltage Category				III
Test Voltage	1.6 kV	1.3 kV	1.6 kV	4.0 kV
Pollution Degree				3

ORDER DATA (SPACING 5.08 MM)

Poles	Width (mm)	Article Designation	Article Number	PU
2	20.32	STLZ950/2F-5.08-V-P2.6-BK-HT	50950026367E	100
3	25.40	STLZ950/3F-5.08-V-P2.6-BK-HT	50950036367E	100
4	30.48	STLZ950/4F-5.08-V-P2.6-BK-HT	50950046367E	100
5	35.56	STLZ950/5F-5.08-V-P2.6-BK-HT	50950056367E	100
6	40.64	STLZ950/6F-5.08-V-P2.6-BK-HT	50950066367D	50
7	45.72	STLZ950/7F-5.08-V-P2.6-BK-HT	50950076367D	50
8	50.80	STLZ950/8F-5.08-V-P2.6-BK-HT	50950086367D	50
9	55.88	STLZ950/9F-5.08-V-P2.6-BK-HT	50950096367D	50
...	...	...	...	...
12	71.12	STLZ950/12F-5.08-V-P2.6-BK-HT	50950126367D	50

[1]Colours according to RAL, there may be variations on colour due to production conditions.

Spacing 5.0 mm / Spacing 5.08 mm

STL950/..F-5.0-V-P2.6-BK-HT
STLZ950/..F-5.08-V-P2.6-BK-HT

WIRE SIZES	
solid min	-
solid max	-
stranded min	-
stranded max	-
stranded with ferrule min	-
stranded with ferrule max	-
DIMENSIONS	
Stripped Length	-
PCB Hole Diameter	1.4 mm
MATERIALS	
Thread Insert, Flange	Brass
Contact Pin	Copper Alloy
INSULATING MATERIAL	
Material	PPA
Flammability Class	UL 94 V-0
TEMPERATURES	
Operating Temperature (without mech. load)	-40 °C - 105 °C
WAVE SOLDERING PROCESS	
Soldering Temperature, recommended	260 °C
Peak Soldering Time, recommended	3-4 s
REFLOW PROCESS	
Soldering Temperature, recommended	217 °C - 245 °C
Peak Soldering Time, recommended	60 s



Technical Drawing see page 280

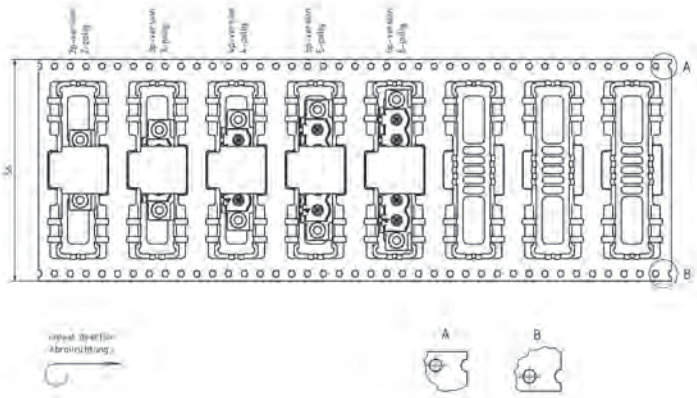

COLOURS[1]

BLACK, RAL 9011

COUNTERPARTS (SPACING 5.0 MM)

PCB Terminal Block

AK950 AK1200 AK4951

COUNTERPARTS (SPACING 5.08 MM)

PCB Terminal Block

AKZ950 AKZ1100 AKZ1110 AKZ1200 AKZ4951

TAPE-ON-REEL

Poles	Reel (RD/")	Width (R/mm)	Pitch (RP/mm)	Pieces (PCS)
2-6	13	56	20	140

ACCESSORIES

	Description	Article Number
	Coding Star CS2-5.0/5.08-LIGHT GREY-HT	50000000028

ORDER DATA (SPACING 5.0 MM)

Poles	Width (mm)	Article Designation	Article Number	PU
2	20.00	STL950/2F-5.0-V-P2.6-BK-HT	50950026387R	140
3	25.00	STL950/3F-5.0-V-P2.6-BK-HT	50950036387R	140
4	30.00	STL950/4F-5.0-V-P2.6-BK-HT	50950046387R	140
5	35.00	STL950/5F-5.0-V-P2.6-BK-HT	50950056387R	140
6	40.00	STL950/6F-5.0-V-P2.6-BK-HT	50950066387R	140

ORDER DATA (SPACING 5.08 MM)

Poles	Width (mm)	Article Designation	Article Number	PU
2	20.32	STLZ950/2F-5.08-V-P2.6-BK-HT	50950026367R	140
3	25.40	STLZ950/3F-5.08-V-P2.6-BK-HT	50950036367R	140
4	30.48	STLZ950/4F-5.08-V-P2.6-BK-HT	50950046367R	140
5	35.56	STLZ950/5F-5.08-V-P2.6-BK-HT	50950056367R	140
6	40.64	STLZ950/6F-5.08-V-P2.6-BK-HT	50950066367R	140

RATINGS

	c UL us			VDE
Usegroup	B	C	D	
Rated Voltage	300 V	150 V	300 V	250 V
Rated Current	15 A	15 A	10 A	12 A
Overvoltage Category				III
Test Voltage	1.6 kV	1.3 kV	1.6 kV	4.0 kV
Pollution Degree				3

[1]Colours according to RAL, there may be variations on colour due to production conditions.

L'IMPULSION
Retrouvez nous sur
www.limpulsion.fr

STL950/..F-5.0-V-GREEN-HC
STLZ950/..F-5.08-V-GREEN-HC

Spacing 5.0 mm / Spacing 5.08 mm



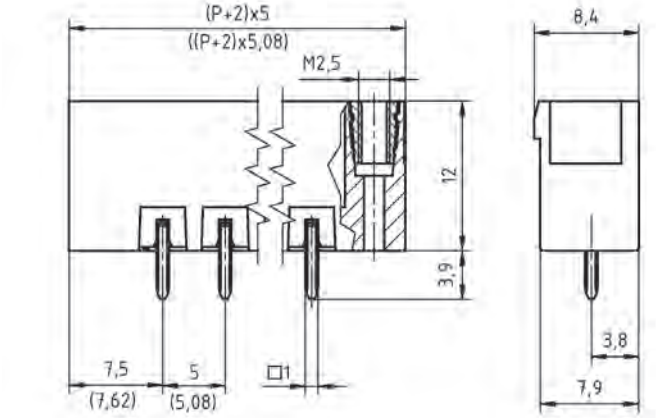

WIRE SIZES	
solid min	-
solid max	-
stranded min	-
stranded max	-
stranded with ferrule min	-
stranded with ferrule max	-
DIMENSIONS	
Stripped Length	-
PCB Hole Diameter	1.4 mm
MATERIALS	
Thread Insert, Flange	Brass
Contact Pin	Copper Alloy
INSULATING MATERIAL	
Material	PA 6.6
Flammability Class	UL 94 V-0
TEMPERATURES	
Operating Temperature (without mech. load)	-40 °C - 105 °C
WAVE SOLDERING PROCESS	
Soldering Temperature, recommended	260 °C
Peak Soldering Time, recommended	3-4 s
REFLOW PROCESS	
Soldering Temperature, recommended	-
Peak Soldering Time, recommended	-

COLOURS[1]

GREEN, RAL 6018

LIGHT GREEN, similar RAL 6018

COUNTERPARTS (SPACING 5.0 MM)

PCB Terminal Block

AK950

COUNTERPARTS (SPACING 5.08 MM)

PCB Terminal Block

AKZ950

ACCESSORIES

	Description	Article Number
	Coding Star CS2-5.0/5.08-RED	50000000024
	Separating Element SE-STL950-GREEN	50950000002

RATINGS

	cULus			VDE
Usegroup	B	C	D	
Rated Voltage	300 V	150 V	300 V	250 V
Rated Current	16 A	16 A	10 A	16 A
Overvoltage Category				III
Test Voltage	1.6 kV	1.3 kV	1.6 kV	4.0 kV
Pollution Degree				3

ORDER DATA (SPACING 5.0 MM)

Poles	Width (mm)	Article Designation	Article Number	PU
2	20.00	STL950/2F-5.0-V-GREEN-HC	50950026109E	100
3	25.00	STL950/3F-5.0-V-GREEN-HC	50950036109E	100
4	30.00	STL950/4F-5.0-V-GREEN-HC	50950046109D	50
5	35.00	STL950/5F-5.0-V-GREEN-HC	50950056109D	50
6	40.00	STL950/6F-5.0-V-GREEN-HC	50950066109D	50
7	45.00	STL950/7F-5.0-V-GREEN-HC	50950076109D	50
8	50.00	STL950/8F-5.0-V-GREEN-HC	50950086109D	50
9	55.00	STL950/9F-5.0-V-GREEN-HC	50950096109D	50
...	...	...	...	...
12	70.00	STL950/12F-5.0-V-GREEN-HC	50950126109D	50

ORDER DATA (SPACING 5.08 MM)

Poles	Width (mm)	Article Designation	Article Number	PU
2	20.32	STLZ950/2F-5.08-V-GREEN-HC	50950026129E	100
3	25.40	STLZ950/3F-5.08-V-GREEN-HC	50950036129E	100
4	30.48	STLZ950/4F-5.08-V-GREEN-HC	50950046129D	50
5	35.56	STLZ950/5F-5.08-V-GREEN-HC	50950056129D	50
6	40.64	STLZ950/6F-5.08-V-GREEN-HC	50950066129D	50
7	45.72	STLZ950/7F-5.08-V-GREEN-HC	50950076129D	50
8	50.80	STLZ950/8F-5.08-V-GREEN-HC	50950086129D	50
9	55.88	STLZ950/9F-5.08-V-GREEN-HC	50950096129D	50
...	...	...	...	...
12	71.12	STLZ950/12F-5.08-V-GREEN-HC	50950126129D	50

[1]Colours according to RAL, there may be variations on colour due to production conditions. Special colours on request.

Spacing 5.0 mm / Spacing 5.08 mm

STL950/..F-5.0-V-P2.6-BK-HC-HT
STLZ950/..F-5.08-V-P2.6-BK-HC-HT

WIRE SIZES	
solid min	-
solid max	-
stranded min	-
stranded max	-
stranded with ferrule min	-
stranded with ferrule max	-
DIMENSIONS	
Stripped Length	-
PCB Hole Diameter	1.4 mm
MATERIALS	
Thread Insert, Flange	Brass
Contact Pin	Copper Alloy
INSULATING MATERIAL	
Material	PPA
Flammability Class	UL 94 V-0
TEMPERATURES	
Operating Temperature (without mech. load)	-40 °C - 105 °C
WAVE SOLDERING PROCESS	
Soldering Temperature, recommended	260 °C
Peak Soldering Time, recommended	3-4 s
REFLOW PROCESS	
Soldering Temperature, recommended	217 °C - 245 °C
Peak Soldering Time, recommended	60 s



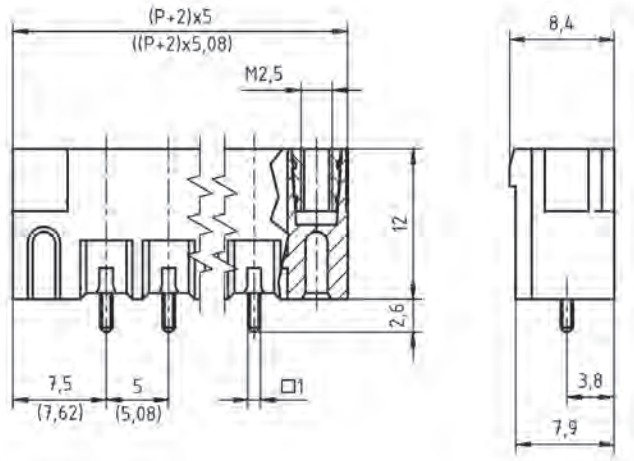

COLOURS[1]	
	BLACK, RAL 9011

COUNTERPARTS (SPACING 5.0 MM)
PCB Terminal Block
AK950

COUNTERPARTS (SPACING 5.08 MM)
PCB Terminal Block
AKZ950

ORDER DATA (SPACING 5.0 MM)

Poles	Width (mm)	Article Designation	Article Number	PU
2	20.00	STL950/2F-5.0-V-P2.6-BK-HC-HT	50950026389E	100
3	25.00	STL950/3F-5.0-V-P2.6-BK-HC-HT	50950036389E	100
4	30.00	STL950/4F-5.0-V-P2.6-BK-HC-HT	50950046389D	50
5	35.00	STL950/5F-5.0-V-P2.6-BK-HC-HT	50950056389D	50
6	40.00	STL950/6F-5.0-V-P2.6-BK-HC-HT	50950066389D	50
7	45.00	STL950/7F-5.0-V-P2.6-BK-HC-HT	50950076389D	50
8	50.00	STL950/8F-5.0-V-P2.6-BK-HC-HT	50950086389D	50
9	55.00	STL950/9F-5.0-V-P2.6-BK-HC-HT	50950096389D	50
...	...	...	...	...
12	70.00	STL950/12F-5.0-V-P2.6-BK-HC-HT	50950126389D	50

ORDER DATA (SPACING 5.08 MM)

Poles	Width (mm)	Article Designation	Article Number	PU
2	20.32	STLZ950/2F-5.08-V-P2.6-BK-HC-HT	50950026379E	100
3	25.40	STLZ950/3F-5.08-V-P2.6-BK-HC-HT	50950036379E	100
4	30.48	STLZ950/4F-5.08-V-P2.6-BK-HC-HT	50950046379D	50
5	35.56	STLZ950/5F-5.08-V-P2.6-BK-HC-HT	50950056379D	50
6	40.64	STLZ950/6F-5.08-V-P2.6-BK-HC-HT	50950066379D	50
7	45.72	STLZ950/7F-5.08-V-P2.6-BK-HC-HT	50950076379D	50
8	50.80	STLZ950/8F-5.08-V-P2.6-BK-HC-HT	50950086379D	50
9	55.88	STLZ950/9F-5.08-V-P2.6-BK-HC-HT	50950096379D	50
...	...	...	...	...
12	71.12	STLZ950/12F-5.08-V-P2.6-BK-HC-HT	50950126379D	50

ACCESSORIES

	Description	Article Number
	Coding Star CS2-5.0/5.08-LIGHT GREY-HT	50000000028

RATINGS

	c UL us			VDE
Usegroup	B	C	D	
Rated Voltage	300 V	150 V	300 V	250 V
Rated Current	16 A	16 A	10 A	16 A
Overvoltage Category				III
Test Voltage	1.6 kV	1.3 kV	1.6 kV	4.0 kV
Pollution Degree				3

[1]Colours according to RAL, there may be variations on colour due to production conditions.

L'IMPULSION
Retrouvez nous sur
www.limpulsion.fr

STL950/..F-5.0-V-P2.6-BK-HC-HT
STLZ950/..F-5.08-V-P2.6-BK-HC-HT

Spacing 5.0 mm / Spacing 5.08 mm



Technical Drawing see page 283

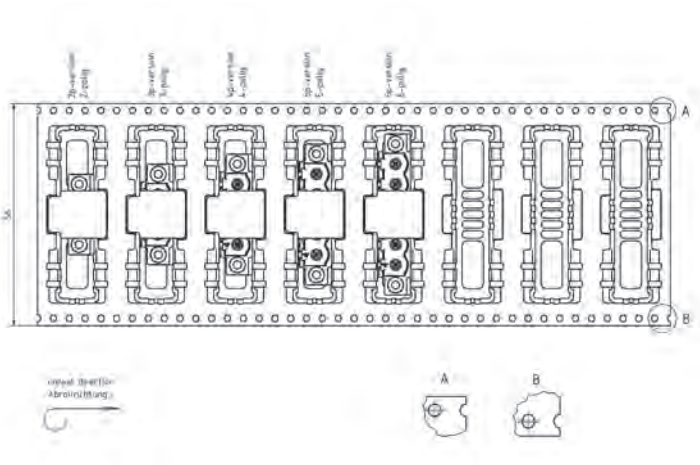

WIRE SIZES	
solid min	-
solid max	-
stranded min	-
stranded max	-
stranded with ferrule min	-
stranded with ferrule max	-
DIMENSIONS	
Stripped Length	-
PCB Hole Diameter	1.4 mm
MATERIALS	
Thread Insert, Flange	Brass
Contact Pin	Copper Alloy
INSULATING MATERIAL	
Material	PPA
Flammability Class	UL 94 V-0
TEMPERATURES	
Operating Temperature (without mech. load)	-40 °C - 105 °C
WAVE SOLDERING PROCESS	
Soldering Temperature, recommended	260 °C
Peak Soldering Time, recommended	3-4 s
REFLOW PROCESS	
Soldering Temperature, recommended	217 °C - 245 °C
Peak Soldering Time, recommended	60 s

COLOURS[1]

BLACK, RAL 9011

COUNTERPARTS (SPACING 5.0 MM)

PCB Terminal Block

AK950

COUNTERPARTS (SPACING 5.08 MM)

PCB Terminal Block

AKZ950

ACCESSORIES

	Description	Article Number
	Coding Star CS2-5.0/5.08-LIGHT GREY-HT	50000000028

TAPE-ON-REEL

Poles	Reel (RD/")	Width (R/mm)	Pitch (RP/mm)	Pieces (PCS)
2-6	13	56	20	140

RATINGS

Usegroup	B	C	D	
Rated Voltage	300 V	150 V	300 V	250 V
Rated Current	16 A	16 A	10 A	16 A
Overvoltage Category				III
Test Voltage	1.6 kV	1.3 kV	1.6 kV	4.0 kV
Pollution Degree				3

ORDER DATA (SPACING 5.0 MM)

Poles	Width (mm)	Article Designation	Article Number	PU
2	20.00	STL950/2F-5.0-V-P2.6-BK-HC-HT	50950026389R	140
3	25.00	STL950/3F-5.0-V-P2.6-BK-HC-HT	50950036389R	140
4	30.00	STL950/4F-5.0-V-P2.6-BK-HC-HT	50950046389R	140
5	35.00	STL950/5F-5.0-V-P2.6-BK-HC-HT	50950056389R	140
6	40.00	STL950/6F-5.0-V-P2.6-BK-HC-HT	50950066389R	140

ORDER DATA (SPACING 5.08 MM)

Poles	Width (mm)	Article Designation	Article Number	PU
2	20.32	STLZ950/2F-5.08-V-P2.6-BK-HC-HT	50950026379R	140
3	25.40	STLZ950/3F-5.08-V-P2.6-BK-HC-HT	50950036379R	140
4	30.48	STLZ950/4F-5.08-V-P2.6-BK-HC-HT	50950046379R	140
5	35.56	STLZ950/5F-5.08-V-P2.6-BK-HC-HT	50950056379R	140
6	40.64	STLZ950/6F-5.08-V-P2.6-BK-HC-HT	50950066379R	140

[1]Colours according to RAL, there may be variations on colour due to production conditions.

Spacing 5.08 mm

STLZ950/..-5.08-V-GREEN-INV

WIRE SIZES	
solid min	-
solid max	-
stranded min	-
stranded max	-
stranded with ferrule min	-
stranded with ferrule max	-
DIMENSIONS	
Stripped Length	-
PCB Hole Diameter	1.4 mm
MATERIALS	
Contact Spring	Bronze
INSULATING MATERIAL	
Material	PA 6.6
Flammability Class	UL 94 V-0
TEMPERATURES	
Operating Temperature (without mech. load)	-40 °C - 105 °C
WAVE SOLDERING PROCESS	
Soldering Temperature, recommended	260 °C
Peak Soldering Time, recommended	3-4 s
REFLOW PROCESS	
Soldering Temperature, recommended	-
Peak Soldering Time, recommended	-



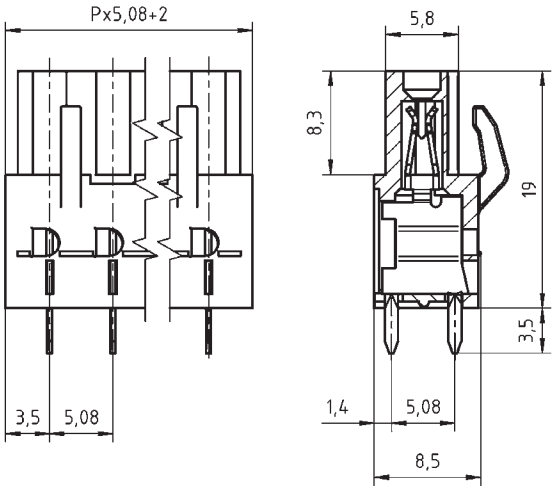

COLOURS[1]

GREEN, RAL 6018

LIGHT GREEN, similar RAL 6018

COUNTERPARTS (SPACING 5.08 MM)

Pin Strip / PCB Terminal Block

STLZ950 STLZ990 STLZ970 AKZ950 AKZS950

ORDER DATA (SPACING 5.08 MM)

Poles	Width (mm)	Article Designation	Article Number	PU
2	12.16	STLZ950/2-5.08-V-GREEN-INV	50950029121F	200
3	17.24	STLZ950/3-5.08-V-GREEN-INV	50950039121F	200
4	22.32	STLZ950/4-5.08-V-GREEN-INV	50950049121F	200
5	27.40	STLZ950/5-5.08-V-GREEN-INV	50950059121E	100
6	32.48	STLZ950/6-5.08-V-GREEN-INV	50950069121E	100
7	37.56	STLZ950/7-5.08-V-GREEN-INV	50950079121E	100
8	42.64	STLZ950/8-5.08-V-GREEN-INV	50950089121D	50
9	47.72	STLZ950/9-5.08-V-GREEN-INV	50950099121D	50
10	52.80	STLZ950/10-5.08-V-GREEN-INV	50950109121D	50
11	57.88	STLZ950/11-5.08-V-GREEN-INV	50950119121D	50
12	62.96	STLZ950/12-5.08-V-GREEN-INV	50950129121D	50
13	68.04	STLZ950/13-5.08-V-GREEN-INV	50950139121D	50
14	73.12	STLZ950/14-5.08-V-GREEN-INV	50950149121D	50
15	78.20	STLZ950/15-5.08-V-GREEN-INV	50950159121D	50
16	83.28	STLZ950/16-5.08-V-GREEN-INV	50950169121D	50
17	88.36	STLZ950/17-5.08-V-GREEN-INV	50950179121D	50
18	93.44	STLZ950/18-5.08-V-GREEN-INV	50950189121D	50
19	98.52	STLZ950/19-5.08-V-GREEN-INV	50950199121D	50
20	103.60	STLZ950/20-5.08-V-GREEN-INV	50950209121D	50
21	108.68	STLZ950/21-5.08-V-GREEN-INV	50950219121D	50
22	113.76	STLZ950/22-5.08-V-GREEN-INV	50950229121D	50
23	118.84	STLZ950/23-5.08-V-GREEN-INV	50950239121D	50
24	123.92	STLZ950/24-5.08-V-GREEN-INV	50950249121D	50

ACCESSORIES

	Description	Article Number
	Coding Star CS4-5.0/5.08-RED	50000000026

RATINGS

	c UL us			VDE
Usegroup	B	C	D	
Rated Voltage	300 V	-	300 V	250 V
Rated Current	15 A	-	10 A	12 A
Overvoltage Category				III
Test Voltage	1.6 kV	-	1.6 kV	4.0 kV
Pollution Degree				3

[1]Colours according to RAL, there may be variations on colour due to production conditions. Special colours on request.

L'IMPULSION
Retrouvez nous sur
www.limpulsion.fr

STL950/..-5.0-H-GREEN
STLZ950/..-5.08-H-GREEN

Spacing 5.0 mm / Spacing 5.08 mm



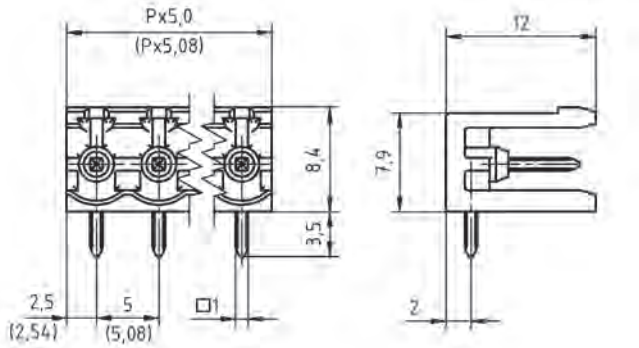

WIRE SIZES	
solid min	-
solid max	-
stranded min	-
stranded max	-
stranded with ferrule min	-
stranded with ferrule max	-
DIMENSIONS	
Stripped Length	-
PCB Hole Diameter	1.4 mm
MATERIALS	
Contact Pin	Copper Alloy
INSULATING MATERIAL	
Material	PA 6.6
Flammability Class	UL 94 V-0
TEMPERATURES	
Operating Temperature (without mech. load)	-40 °C - 105 °C
WAVE SOLDERING PROCESS	
Soldering Temperature, recommended	260 °C
Peak Soldering Time, recommended	3-4 s
REFLOW PROCESS	
Soldering Temperature, recommended	-
Peak Soldering Time, recommended	-

COLOURS[1]

GREEN, RAL 6018		BLACK, RAL 9011	
BASALT GREY, RAL 7012		PEBBLE GREY, RAL 7032	
LIGHT GREY, RAL 7035		LIGHT GREEN, similar RAL 6018	

COUNTERPARTS (SPACING 5.0 MM)

PCB Terminal Block

AK950 AK955 AK1100 AK1110 AK1200 AK3950 AK4951

COUNTERPARTS (SPACING 5.08 MM)

Pin Strip / PCB Terminal Block

STLZ950-INV AKZ950 AKZ955 AKZ1100 AKZ1110 AKZ1200 AKZ4951

ACCESSORIES

	Description	Article Number
	Coding Star CS2-5.0/5.08-RED	50000000024
	Separating Element SE-STL950-GREEN	50950000002

RATINGS

	cULus			VDE
Usegroup	B	C	D	
Rated Voltage	300 V	150 V	300 V	250 V
Rated Current	15 A	15 A	10 A	12 A
Overvoltage Category				III
Test Voltage	1.6 kV	1.3 kV	1.6 kV	4.0 kV
Pollution Degree				3

ORDER DATA (SPACING 5.0 MM)

Poles	Width (mm)	Article Designation	Article Number	PU
2	10.00	STL950/2-5.0-H-GREEN	50950025011F	200
3	15.00	STL950/3-5.0-H-GREEN	50950035011F	200
4	20.00	STL950/4-5.0-H-GREEN	50950045011F	200
5	25.00	STL950/5-5.0-H-GREEN	50950055011E	100
6	30.00	STL950/6-5.0-H-GREEN	50950065011E	100
7	35.00	STL950/7-5.0-H-GREEN	50950075011E	100
8	40.00	STL950/8-5.0-H-GREEN	50950085011D	50
9	45.00	STL950/9-5.0-H-GREEN	50950095011D	50
...	...	...	...	...
24	120.00	STL950/24-5.0-H-GREEN	50950245011D	50

ORDER DATA (SPACING 5.08 MM)

Poles	Width (mm)	Article Designation	Article Number	PU
2	10.16	STLZ950/2-5.08-H-GREEN	50950025031F	200
3	15.24	STLZ950/3-5.08-H-GREEN	50950035031F	200
4	20.32	STLZ950/4-5.08-H-GREEN	50950045031F	200
5	25.40	STLZ950/5-5.08-H-GREEN	50950055031E	100
6	30.48	STLZ950/6-5.08-H-GREEN	50950065031E	100
7	35.56	STLZ950/7-5.08-H-GREEN	50950075031E	100
8	40.64	STLZ950/8-5.08-H-GREEN	50950085031D	50
9	45.72	STLZ950/9-5.08-H-GREEN	50950095031D	50
...	...	...	...	...
24	121.92	STLZ950/24-5.08-H-GREEN	50950245031D	50

[1]Colours according to RAL, there may be variations on colour due to production conditions. Special colours on request.

Spacing 5.0 mm / Spacing 5.08 mm

STL950/..-5.0-H-P2.6-BK-HT
STLZ950/..-5.08-H-P2.6-BK-HT

WIRE SIZES	
solid min	-
solid max	-
stranded min	-
stranded max	-
stranded with ferrule min	-
stranded with ferrule max	-
DIMENSIONS	
Stripped Length	-
PCB Hole Diameter	1.4 mm
MATERIALS	
Contact Pin	Copper Alloy
INSULATING MATERIAL	
Material	PPA
Flammability Class	UL 94 V-0
TEMPERATURES	
Operating Temperature (without mech. load)	-40 °C - 105 °C
WAVE SOLDERING PROCESS	
Soldering Temperature, recommended	260 °C
Peak Soldering Time, recommended	3-4 s
REFLOW PROCESS	
Soldering Temperature, recommended	217 °C - 245 °C
Peak Soldering Time, recommended	60 s



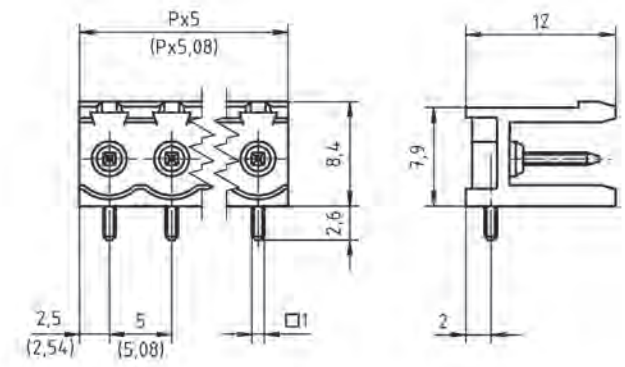

COLOURS[1]	
	BLACK, RAL 9011

COUNTERPARTS (SPACING 5.0 MM)
PCB Terminal Block
AK950 AK955 AK1100 AK1110 AK1200 AK3950 AK4951

COUNTERPARTS (SPACING 5.08 MM)
Pin Strip / PCB Terminal Block
STLZ950-INV AKZ950 AKZ1100 AKZ1110 AKZ1200 AKZ4951

ORDER DATA (SPACING 5.0 MM)

Poles	Width (mm)	Article Designation	Article Number	PU
2	10.00	STL950/2-5.0-H-P2.6-BK-HT	50950025317F	200
3	15.00	STL950/3-5.0-H-P2.6-BK-HT	50950035317F	200
4	20.00	STL950/4-5.0-H-P2.6-BK-HT	50950045317F	200
5	25.00	STL950/5-5.0-H-P2.6-BK-HT	50950055317E	100
6	30.00	STL950/6-5.0-H-P2.6-BK-HT	50950065317E	100
7	35.00	STL950/7-5.0-H-P2.6-BK-HT	50950075317E	100
8	40.00	STL950/8-5.0-H-P2.6-BK-HT	50950085317D	50
9	45.00	STL950/9-5.0-H-P2.6-BK-HT	50950095317D	50
...	...	...	...	...
12	60.00	STL950/12-5.0-H-P2.6-BK-HT	50950125317D	50

ORDER DATA (SPACING 5.08 MM)

Poles	Width (mm)	Article Designation	Article Number	PU
2	10.16	STLZ950/2-5.08-H-P2.6-BK-HT	50950025337F	200
3	15.24	STLZ950/3-5.08-H-P2.6-BK-HT	50950035337F	200
4	20.32	STLZ950/4-5.08-H-P2.6-BK-HT	50950045337F	200
5	25.40	STLZ950/5-5.08-H-P2.6-BK-HT	50950055337E	100
6	30.48	STLZ950/6-5.08-H-P2.6-BK-HT	50950065337E	100
7	35.56	STLZ950/7-5.08-H-P2.6-BK-HT	50950075337E	100
8	40.64	STLZ950/8-5.08-H-P2.6-BK-HT	50950085337D	50
9	45.72	STLZ950/9-5.08-H-P2.6-BK-HT	50950095337D	50
...	...	...	...	...
12	60.96	STLZ950/12-5.08-H-P2.6-BK-HT	50950125337D	50

ACCESSORIES

	Description	Article Number
	Coding Star CS2-5.0/5.08-LIGHT GREY-HT	50000000028

RATINGS	c UL us			VDE
Usegroup	B	C	D	
Rated Voltage	300 V	150 V	300 V	250 V
Rated Current	15 A	15 A	10 A	12 A
Overvoltage Category				III
Test Voltage	1.6 kV	1.3 kV	1.6 kV	4.0 kV
Pollution Degree				3

[1]Colours according to RAL, there may be variations on colour due to production conditions.

L'IMPULSION
Retrouvez nous sur
www.limpulsion.fr

STL950/..-5.0-H-P2.6-BK-HT
STLZ950/..-5.08-H-P2.6-BK-HT

Spacing 5.0 mm / Spacing 5.08 mm



Technical Drawing see page 287

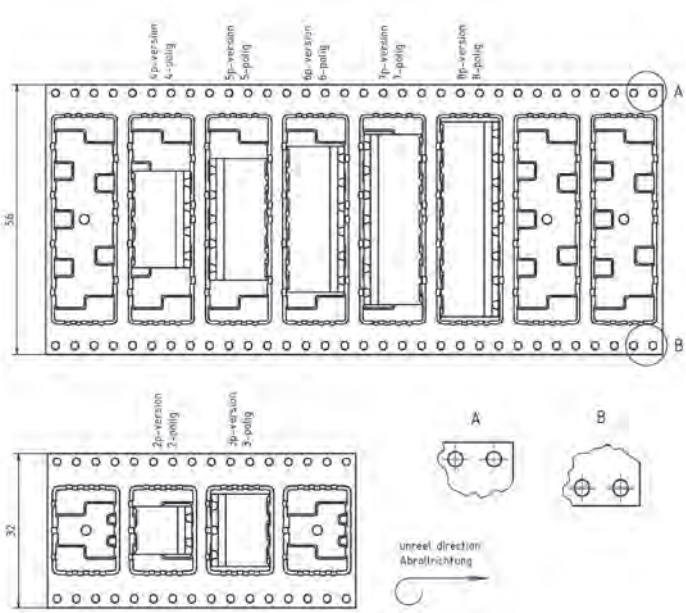

WIRE SIZES	
solid min	-
solid max	-
stranded min	-
stranded max	-
stranded with ferrule min	-
stranded with ferrule max	-
DIMENSIONS	
Stripped Length	-
PCB Hole Diameter	1.4 mm
MATERIALS	
Contact Pin	Copper Alloy
INSULATING MATERIAL	
Material	PPA
Flammability Class	UL 94 V-0
TEMPERATURES	
Operating Temperature (without mech. load)	-40 °C - 105 °C
WAVE SOLDERING PROCESS	
Soldering Temperature, recommended	260 °C
Peak Soldering Time, recommended	3-4 s
REFLOW PROCESS	
Soldering Temperature, recommended	217 °C - 245 °C
Peak Soldering Time, recommended	60 s

COLOURS[1]

BLACK, RAL 9011

COUNTERPARTS (SPACING 5.0 MM)

PCB Terminal Block

AK950 AK955 AK1100 AK1110 AK1200 AK3950 AK4951

COUNTERPARTS (SPACING 5.08 MM)

Pin Strip / PCB Terminal Block

STLZ950-INV AKZ950 AKZ1100 AKZ1110 AKZ1200 AKZ4951

ACCESSORIES

	Description	Article Number
	Coding Star CS2-5.0/5.08-LIGHT GREY-HT	50000000028

TAPE-ON-REEL

Poles	Reel (RD/")	Width (R/mm)	Pitch (RP/mm)	Pieces (PCS)
2-3	13	32	16	330
4-8	13	56	16	330

RATINGS

Usegroup	B	C	D	
Rated Voltage	300 V	150 V	300 V	250 V
Rated Current	15 A	15 A	10 A	12 A
Overvoltage Category				III
Test Voltage	1.6 kV	1.3 kV	1.6 kV	4.0 kV
Pollution Degree				3

ORDER DATA (SPACING 5.0 MM)

Poles	Width (mm)	Article Designation	Article Number	PU
2	10.00	STL950/2-5.0-H-P2.6-BK-HT	50950025317R	330
3	15.00	STL950/3-5.0-H-P2.6-BK-HT	50950035317R	330
4	20.00	STL950/4-5.0-H-P2.6-BK-HT	50950045317R	330
5	25.00	STL950/5-5.0-H-P2.6-BK-HT	50950055317R	330
6	30.00	STL950/6-5.0-H-P2.6-BK-HT	50950065317R	330
7	35.00	STL950/7-5.0-H-P2.6-BK-HT	50950075317R	330
8	40.00	STL950/8-5.0-H-P2.6-BK-HT	50950085317R	330

ORDER DATA (SPACING 5.08 MM)

Poles	Width (mm)	Article Designation	Article Number	PU
2	10.16	STLZ950/2-5.08-H-P2.6-BK-HT	50950025337R	330
3	15.24	STLZ950/3-5.08-H-P2.6-BK-HT	50950035337R	330
4	20.32	STLZ950/4-5.08-H-P2.6-BK-HT	50950045337R	330
5	25.40	STLZ950/5-5.08-H-P2.6-BK-HT	50950055337R	330
6	30.48	STLZ950/6-5.08-H-P2.6-BK-HT	50950065337R	330
7	35.56	STLZ950/7-5.08-H-P2.6-BK-HT	50950075337R	330
8	40.64	STLZ950/8-5.08-H-P2.6-BK-HT	50950085337R	330

[1]Colours according to RAL, there may be variations on colour due to production conditions.

Spacing 5.0 mm / Spacing 5.08 mm

STL950/..-5.0-H-GREEN-HC
STLZ950/..-5.08-H-GREEN-HC

WIRE SIZES	
solid min	-
solid max	-
stranded min	-
stranded max	-
stranded with ferrule min	-
stranded with ferrule max	-
DIMENSIONS	
Stripped Length	-
PCB Hole Diameter	1.4 mm
MATERIALS	
Contact Pin	Copper Alloy
INSULATING MATERIAL	
Material	PA 6.6
Flammability Class	UL 94 V-0
TEMPERATURES	
Operating Temperature (without mech. load)	-40 °C - 105 °C
WAVE SOLDERING PROCESS	
Soldering Temperature, recommended	260 °C
Peak Soldering Time, recommended	3-4 s
REFLOW PROCESS	
Soldering Temperature, recommended	-
Peak Soldering Time, recommended	-



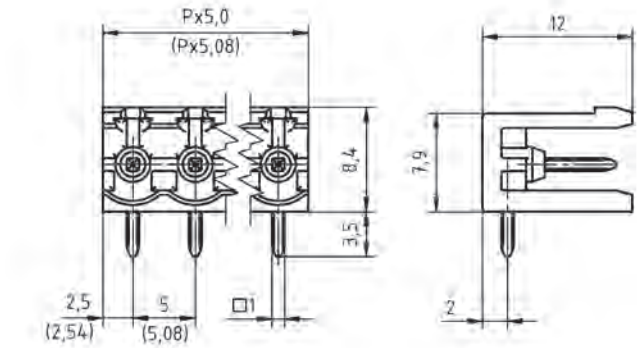

COLOURS[1]			
GREEN, RAL 6018		BLACK, RAL 9011	
PEBBLE GREY, RAL 7032		LIGHT GREEN, similar RAL 6018	

COUNTERPARTS (SPACING 5.0 MM)
PCB Terminal Block
AK950

COUNTERPARTS (SPACING 5.08 MM)
PCB Terminal Block
AKZ950

ORDER DATA (SPACING 5.0 MM)

Poles	Width (mm)	Article Designation	Article Number	PU
2	10.00	STL950/2-5.0-H-GREEN-HC	50950025019F	200
3	15.00	STL950/3-5.0-H-GREEN-HC	50950035019F	200
4	20.00	STL950/4-5.0-H-GREEN-HC	50950045019F	200
5	25.00	STL950/5-5.0-H-GREEN-HC	50950055019E	100
6	30.00	STL950/6-5.0-H-GREEN-HC	50950065019E	100
7	35.00	STL950/7-5.0-H-GREEN-HC	50950075019E	100
8	40.00	STL950/8-5.0-H-GREEN-HC	50950085019D	50
9	45.00	STL950/9-5.0-H-GREEN-HC	50950095019D	50
...	...	...	...	...
12	60.00	STL950/12-5.0-H-GREEN-HC	50950125019D	50

ORDER DATA (SPACING 5.08 MM)

Poles	Width (mm)	Article Designation	Article Number	PU
2	10.16	STLZ950/2-5.08-H-GREEN-HC	50950025039F	200
3	15.24	STLZ950/3-5.08-H-GREEN-HC	50950035039F	200
4	20.32	STLZ950/4-5.08-H-GREEN-HC	50950045039F	200
5	25.40	STLZ950/5-5.08-H-GREEN-HC	50950055039E	100
6	30.48	STLZ950/6-5.08-H-GREEN-HC	50950065039E	100
7	35.56	STLZ950/7-5.08-H-GREEN-HC	50950075039E	100
8	40.64	STLZ950/8-5.08-H-GREEN-HC	50950085039D	50
9	45.72	STLZ950/9-5.08-H-GREEN-HC	50950095039D	50
...	...	...	...	...
12	60.96	STLZ950/12-5.08-H-GREEN-HC	50950125039D	50

ACCESSORIES

	Description	Article Number
	Coding Star CS2-5.0/5.08-RED	50000000024
	Separating Element SE-STL950-GREEN	50950000002

RATINGS	c UL us			VDE
Usegroup	B	C	D	
Rated Voltage	300 V	150 V	300 V	250 V
Rated Current	16 A	16 A	10 A	16 A
Overvoltage Category				III
Test Voltage	1.6 kV	1.3 kV	1.6 kV	4.0 kV
Pollution Degree				3

[1]Colours according to RAL, there may be variations on colour due to production conditions. Special colours on request.

L'IMPULSION Retrouvez nous sur www.limpulsion.fr

STL950/..-5.0-H-P2.6-BK-HC-HT
STLZ950/..-5.08-H-P2.6-BK-HC-HT

Spacing 5.0 mm / Spacing 5.08 mm



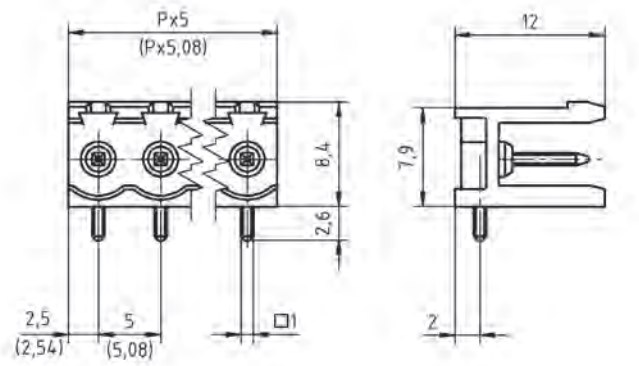

WIRE SIZES	
solid min	-
solid max	-
stranded min	-
stranded max	-
stranded with ferrule min	-
stranded with ferrule max	-
DIMENSIONS	
Stripped Length	-
PCB Hole Diameter	1.4 mm
MATERIALS	
Contact Pin	Copper Alloy
INSULATING MATERIAL	
Material	PPA
Flammability Class	UL 94 V-0
TEMPERATURES	
Operating Temperature (without mech. load)	-40 °C - 105 °C
WAVE SOLDERING PROCESS	
Soldering Temperature, recommended	260 °C
Peak Soldering Time, recommended	3-4 s
REFLOW PROCESS	
Soldering Temperature, recommended	217 °C - 245 °C
Peak Soldering Time, recommended	60 s

COLOURS[1]
BLACK, RAL 9011

COUNTERPARTS (SPACING 5.0 MM)
PCB Terminal Block
AK950

COUNTERPARTS (SPACING 5.08 MM)
PCB Terminal Block
AKZ950

ACCESSORIES

	Description	Article Number
	Coding Star CS2-5.0/5.08-LIGHT GREY-HT	50000000028

RATINGS

	cULus			VDE
Usegroup	B	C	D	
Rated Voltage	300 V	150 V	300 V	250 V
Rated Current	16 A	16 A	10 A	16 A
Overvoltage Category				III
Test Voltage	1.6 kV	1.3 kV	1.6 kV	4.0 kV
Pollution Degree				3

ORDER DATA (SPACING 5.0 MM)

Poles	Width (mm)	Article Designation	Article Number	PU
2	10.00	STL950/2-5.0-H-P2.6-BK-HC-HT	50950025319F	200
3	15.00	STL950/3-5.0-H-P2.6-BK-HC-HT	50950035319F	200
4	20.00	STL950/4-5.0-H-P2.6-BK-HC-HT	50950045319F	200
5	25.00	STL950/5-5.0-H-P2.6-BK-HC-HT	50950055319E	100
6	30.00	STL950/6-5.0-H-P2.6-BK-HC-HT	50950065319E	100
7	35.00	STL950/7-5.0-H-P2.6-BK-HC-HT	50950075319E	100
8	40.00	STL950/8-5.0-H-P2.6-BK-HC-HT	50950085319D	50
9	45.00	STL950/9-5.0-H-P2.6-BK-HC-HT	50950095319D	50
...	...	...	...	...
12	60.00	STL950/12-5.0-H-P2.6-BK-HC-HT	50950125319D	50

ORDER DATA (SPACING 5.08 MM)

Poles	Width (mm)	Article Designation	Article Number	PU
2	10.16	STLZ950/2-5.08-H-P2.6-BK-HC-HT	50950025339F	200
3	15.24	STLZ950/3-5.08-H-P2.6-BK-HC-HT	50950035339F	200
4	20.32	STLZ950/4-5.08-H-P2.6-BK-HC-HT	50950045339F	200
5	25.40	STLZ950/5-5.08-H-P2.6-BK-HC-HT	50950055339E	100
6	30.48	STLZ950/6-5.08-H-P2.6-BK-HC-HT	50950065339E	100
7	35.56	STLZ950/7-5.08-H-P2.6-BK-HC-HT	50950075339E	100
8	40.64	STLZ950/8-5.08-H-P2.6-BK-HC-HT	50950085339D	50
9	45.72	STLZ950/9-5.08-H-P2.6-BK-HC-HT	50950095339D	50
...	...	...	...	...
12	60.96	STLZ950/12-5.08-H-P2.6-BK-HC-HT	50950125339D	50

[1]Colours according to RAL, there may be variations on colour due to production conditions.

Spacing 5.0 mm / Spacing 5.08 mm

STL950/..-5.0-H-P2.6-BK-HC-HT
STLZ950/..-5.08-H-P2.6-BK-HC-HT

WIRE SIZES	
solid min	-
solid max	-
stranded min	-
stranded max	-
stranded with ferrule min	-
stranded with ferrule max	-
DIMENSIONS	
Stripped Length	-
PCB Hole Diameter	1.4 mm
MATERIALS	
Contact Pin	Copper Alloy
INSULATING MATERIAL	
Material	PPA
Flammability Class	UL 94 V-0
TEMPERATURES	
Operating Temperature (without mech. load)	-40 °C - 105 °C
WAVE SOLDERING PROCESS	
Soldering Temperature, recommended	260 °C
Peak Soldering Time, recommended	3-4 s
REFLOW PROCESS	
Soldering Temperature, recommended	217 °C - 245 °C
Peak Soldering Time, recommended	60 s



Technical Drawing see page 290

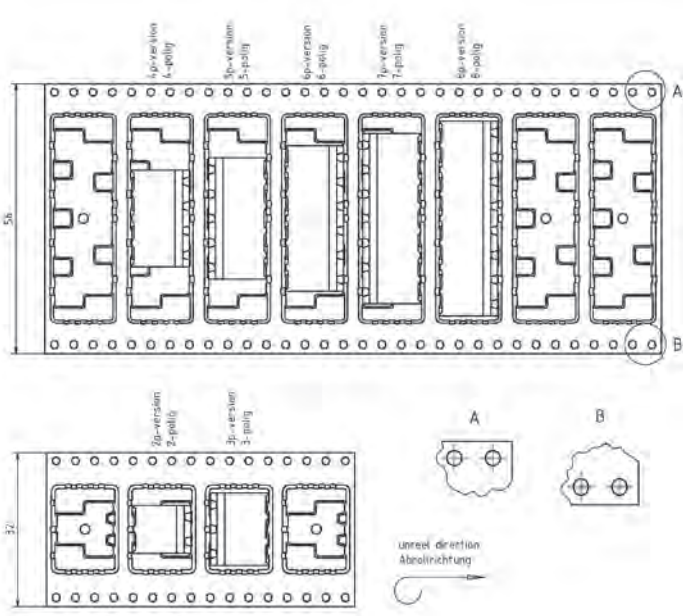

COLOURS[1]

BLACK, RAL 9011

COUNTERPARTS (SPACING 5.0 MM)

PCB Terminal Block
AK950

COUNTERPARTS (SPACING 5.08 MM)

PCB Terminal Block
AKZ950

TAPE-ON-REEL

Poles	Reel (RD/")	Width (R/mm)	Pitch (RP/mm)	Pieces (PCS)
2-3	13	32	16	330
4-8	13	56	16	330

ACCESSORIES



Description	Article Number
Coding Star CS2-5.0/5.08-LIGHT GREY-HT	50000000028

ORDER DATA (SPACING 5.0 MM)

Poles	Width (mm)	Article Designation	Article Number	PU
2	10.00	STL950/2-5.0-H-P2.6-BK-HC-HT	50950025319R	330
3	15.00	STL950/3-5.0-H-P2.6-BK-HC-HT	50950035319R	330
4	20.00	STL950/4-5.0-H-P2.6-BK-HC-HT	50950045319R	330
5	25.00	STL950/5-5.0-H-P2.6-BK-HC-HT	50950055319R	330
6	30.00	STL950/6-5.0-H-P2.6-BK-HC-HT	50950065319R	330
7	35.00	STL950/7-5.0-H-P2.6-BK-HC-HT	50950075319R	330
8	40.00	STL950/8-5.0-H-P2.6-BK-HC-HT	50950085319R	330

ORDER DATA (SPACING 5.08 MM)

Poles	Width (mm)	Article Designation	Article Number	PU
2	10.16	STLZ950/2-5.08-H-P2.6-BK-HC-HT	50950025339R	330
3	15.24	STLZ950/3-5.08-H-P2.6-BK-HC-HT	50950035339R	330
4	20.32	STLZ950/4-5.08-H-P2.6-BK-HC-HT	50950045339R	330
5	25.40	STLZ950/5-5.08-H-P2.6-BK-HC-HT	50950055339R	330
6	30.48	STLZ950/6-5.08-H-P2.6-BK-HC-HT	50950065339R	330
7	35.56	STLZ950/7-5.08-H-P2.6-BK-HC-HT	50950075339R	330
8	40.64	STLZ950/8-5.08-H-P2.6-BK-HC-HT	50950085339R	330

RATINGS

	c UL us			VDE
Usegroup	B	C	D	
Rated Voltage	300 V	150 V	300 V	250 V
Rated Current	16 A	16 A	10 A	16 A
Overvoltage Category				III
Test Voltage	1.6 kV	1.3 kV	1.6 kV	4.0 kV
Pollution Degree				3

[1]Colours according to RAL, there may be variations on colour due to production conditions.

L'IMPULSION
Retrouvez nous sur
www.limpulsion.fr

STL950/..G-5.0-H-GREEN
STLZ950/..G-5.08-H-GREEN

Spacing 5.0 mm / Spacing 5.08 mm



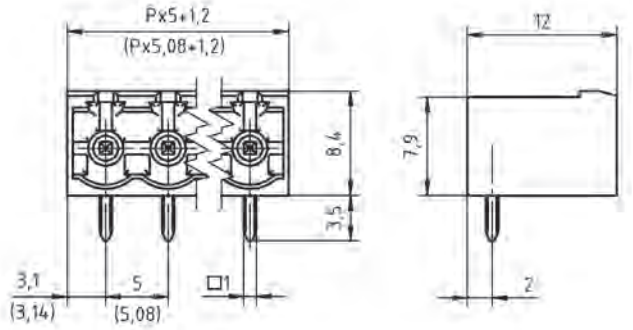

WIRE SIZES	
solid min	-
solid max	-
stranded min	-
stranded max	-
stranded with ferrule min	-
stranded with ferrule max	-
DIMENSIONS	
Stripped Length	-
PCB Hole Diameter	1.4 mm
MATERIALS	
Contact Pin	Copper Alloy
INSULATING MATERIAL	
Material	PA 6.6
Flammability Class	UL 94 V-0
TEMPERATURES	
Operating Temperature (without mech. load)	-40 °C - 105 °C
WAVE SOLDERING PROCESS	
Soldering Temperature, recommended	260 °C
Peak Soldering Time, recommended	3-4 s
REFLOW PROCESS	
Soldering Temperature, recommended	-
Peak Soldering Time, recommended	-

COLOURS[1]

GREEN, RAL 6018	BLACK, RAL 9011
BASALT GREY, RAL 7012	PEBBLE GREY, RAL 7032
LIGHT GREY, RAL 7035	LIGHT GREEN, similar RAL 6018

COUNTERPARTS (SPACING 5.0 MM)

PCB Terminal Block

AK950 AK955 AK1100 AK1110 AK1200 AK3950

COUNTERPARTS (SPACING 5.08 MM)

Pin Strip / PCB Terminal Block

STLZ950-INV AKZ950 AKZ955 AKZ1100 AKZ1110 AKZ1200 AKZ4951

ACCESSORIES

	Description	Article Number
	Coding Star CS2-5.0/5.08-RED	50000000024
	Separating Element SE-STL950-GREEN	50950000002

RATINGS

	cULus			VDE
Usegroup	B	C	D	
Rated Voltage	300 V	150 V	300 V	250 V
Rated Current	15 A	15 A	10 A	12 A
Overvoltage Category				III
Test Voltage	1.6 kV	1.3 kV	1.6 kV	4.0 kV
Pollution Degree				3

ORDER DATA (SPACING 5.0 MM)

Poles	Width (mm)	Article Designation	Article Number	PU
2	11.20	STL950/2G-5.0-H-GREEN	50950025001F	200
3	16.20	STL950/3G-5.0-H-GREEN	50950035001F	200
4	21.20	STL950/4G-5.0-H-GREEN	50950045001F	200
5	26.20	STL950/5G-5.0-H-GREEN	50950055001E	100
6	31.20	STL950/6G-5.0-H-GREEN	50950065001E	100
7	36.20	STL950/7G-5.0-H-GREEN	50950075001E	100
8	41.20	STL950/8G-5.0-H-GREEN	50950085001D	50
9	46.20	STL950/9G-5.0-H-GREEN	50950095001D	50
...	...	...	...	...
24	121.20	STL950/24G-5.0-H-GREEN	50950245001D	50

ORDER DATA (SPACING 5.08 MM)

Poles	Width (mm)	Article Designation	Article Number	PU
2	11.36	STLZ950/2G-5.08-H-GREEN	50950025021F	200
3	16.44	STLZ950/3G-5.08-H-GREEN	50950035021F	200
4	21.52	STLZ950/4G-5.08-H-GREEN	50950045021F	200
5	26.60	STLZ950/5G-5.08-H-GREEN	50950055021E	100
6	31.68	STLZ950/6G-5.08-H-GREEN	50950065021E	100
7	36.76	STLZ950/7G-5.08-H-GREEN	50950075021E	100
8	41.84	STLZ950/8G-5.08-H-GREEN	50950085021D	50
9	46.92	STLZ950/9G-5.08-H-GREEN	50950095021D	50
...	...	...	...	...
24	123.12	STLZ950/24G-5.08-H-GREEN	50950245021D	50

[1]Colours according to RAL, there may be variations on colour due to production conditions. Special colours on request.

Spacing 5.0 mm / Spacing 5.08 mm

STL950/..G-5.0-H-P2.6-BK-HT
STLZ950/..G-5.08-H-P2.6-BK-HT

WIRE SIZES	
solid min	-
solid max	-
stranded min	-
stranded max	-
stranded with ferrule min	-
stranded with ferrule max	-
DIMENSIONS	
Stripped Length	-
PCB Hole Diameter	1.4 mm
MATERIALS	
Contact Pin	Copper Alloy
INSULATING MATERIAL	
Material	PPA
Flammability Class	UL 94 V-0
TEMPERATURES	
Operating Temperature (without mech. load)	-40 °C - 105 °C
WAVE SOLDERING PROCESS	
Soldering Temperature, recommended	260 °C
Peak Soldering Time, recommended	3-4 s
REFLOW PROCESS	
Soldering Temperature, recommended	217 °C - 245 °C
Peak Soldering Time, recommended	60 s



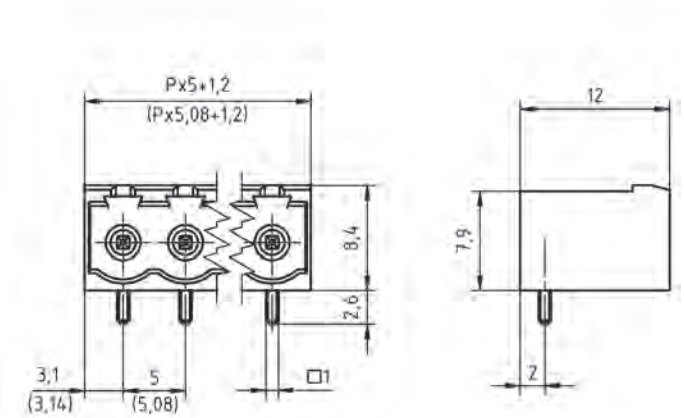

COLOURS[1]	
	BLACK, RAL 9011

COUNTERPARTS (SPACING 5.0 MM)

PCB Terminal Block

AK950 AK955 AK1100 AK1110 AK1200 AK3950 AK4951

COUNTERPARTS (SPACING 5.08 MM)

Pin Strip / PCB Terminal Block

STLZ950-INV AKZ950 AKZ955 AKZ1100 AKZ1110 AKZ1200 AKZ4951

ORDER DATA (SPACING 5.0 MM)

Poles	Width (mm)	Article Designation	Article Number	PU
2	11.20	STL950/2G-5.0-H-P2.6-BK-HT	50950025347F	200
3	16.20	STL950/3G-5.0-H-P2.6-BK-HT	50950035347F	200
4	21.20	STL950/4G-5.0-H-P2.6-BK-HT	50950045347F	200
5	26.20	STL950/5G-5.0-H-P2.6-BK-HT	50950055347E	100
6	31.20	STL950/6G-5.0-H-P2.6-BK-HT	50950065347E	100
7	36.20	STL950/7G-5.0-H-P2.6-BK-HT	50950075347E	100
8	41.20	STL950/8G-5.0-H-P2.6-BK-HT	50950085347D	50
9	46.20	STL950/9G-5.0-H-P2.6-BK-HT	50950095347D	50
...	...	...	...	...
12	61.20	STL950/12G-5.0-H-P2.6-BK-HT	50950125347D	50

ORDER DATA (SPACING 5.08 MM)

Poles	Width (mm)	Article Designation	Article Number	PU
2	11.36	STLZ950/2G-5.08-H-P2.6-BK-HT	50950025327F	200
3	16.44	STLZ950/3G-5.08-H-P2.6-BK-HT	50950035327F	200
4	21.52	STLZ950/4G-5.08-H-P2.6-BK-HT	50950045327F	200
5	26.60	STLZ950/5G-5.08-H-P2.6-BK-HT	50950055327E	100
6	31.68	STLZ950/6G-5.08-H-P2.6-BK-HT	50950065327E	100
7	36.76	STLZ950/7G-5.08-H-P2.6-BK-HT	50950075327E	100
8	41.84	STLZ950/8G-5.08-H-P2.6-BK-HT	50950085327D	50
9	46.92	STLZ950/9G-5.08-H-P2.6-BK-HT	50950095327D	50
...	...	...	...	...
12	62.16	STLZ950/12G-5.08-H-P2.6-BK-HT	50950125327D	50

ACCESSORIES

	Description	Article Number
	Coding Star CS2-5.0/5.08-LIGHT GREY-HT	50000000028

RATINGS	c UL us			VDE
Usegroup	B	C	D	
Rated Voltage	300 V	150 V	300 V	250 V
Rated Current	15 A	15 A	10 A	12 A
Overvoltage Category				III
Test Voltage	1.6 kV	1.3 kV	1.6 kV	4.0 kV
Pollution Degree				3

[1]Colours according to RAL, there may be variations on colour due to production conditions.

L'IMPULSION
Retrouvez nous sur
www.limpulsion.fr

STL950/..G-5.0-H-P2.6-BK-HT
STLZ950/..G-5.08-H-P2.6-BK-HT

Spacing 5.0 mm / Spacing 5.08 mm



Technical Drawing see page 293

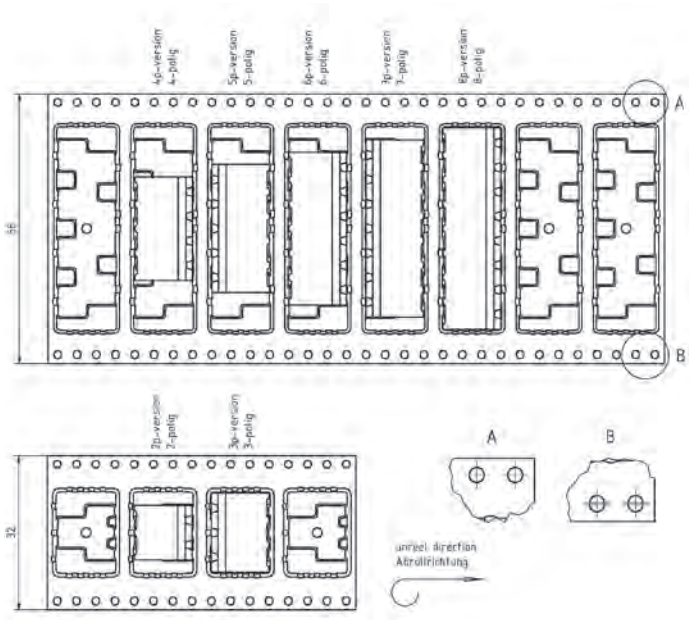

WIRE SIZES	
solid min	-
solid max	-
stranded min	-
stranded max	-
stranded with ferrule min	-
stranded with ferrule max	-
DIMENSIONS	
Stripped Length	-
PCB Hole Diameter	1.4 mm
MATERIALS	
Contact Pin	Copper Alloy
INSULATING MATERIAL	
Material	PPA
Flammability Class	UL 94 V-0
TEMPERATURES	
Operating Temperature (without mech. load)	-40 °C - 105 °C
WAVE SOLDERING PROCESS	
Soldering Temperature, recommended	260 °C
Peak Soldering Time, recommended	3-4 s
REFLOW PROCESS	
Soldering Temperature, recommended	217 °C - 245 °C
Peak Soldering Time, recommended	60 s

COLOURS[1]

BLACK, RAL 9011

COUNTERPARTS (SPACING 5.0 MM)

PCB Terminal Block

AK950 AK955 AK1100 AK1110 AK1200 AK3950 AK4951

COUNTERPARTS (SPACING 5.08 MM)

Pin Strip / PCB Terminal Block

STLZ950-INV AKZ950 AKZ955 AKZ1100 AKZ1110 AKZ1200 AKZ4951

ACCESSORIES

	Description	Article Number
	Coding Star CS2-5.0/5.08-LIGHT GREY-HT	50000000028

TAPE-ON-REEL

Poles	Reel (RD/")	Width (R/mm)	Pitch (RP/mm)	Pieces (PCS)
2-3	13	32	16	330
4-8	13	56	16	330

RATINGS

	c UL us			VDE
Usegroup	B	C	D	
Rated Voltage	300 V	150 V	300 V	250 V
Rated Current	15 A	15 A	10 A	12 A
Overvoltage Category				III
Test Voltage	1.6 kV	1.3 kV	1.6 kV	4.0 kV
Pollution Degree				3

ORDER DATA (SPACING 5.0 MM)

Poles	Width (mm)	Article Designation	Article Number	PU
2	11.20	STL950/2G-5.0-H-P2.6-BK-HT	50950025347R	330
3	16.20	STL950/3G-5.0-H-P2.6-BK-HT	50950035347R	330
4	21.20	STL950/4G-5.0-H-P2.6-BK-HT	50950045347R	330
5	26.20	STL950/5G-5.0-H-P2.6-BK-HT	50950055347R	330
6	31.20	STL950/6G-5.0-H-P2.6-BK-HT	50950065347R	330
7	36.20	STL950/7G-5.0-H-P2.6-BK-HT	50950075347R	330
8	41.20	STL950/8G-5.0-H-P2.6-BK-HT	50950085347R	330

ORDER DATA (SPACING 5.08 MM)

Poles	Width (mm)	Article Designation	Article Number	PU
2	11.36	STLZ950/2G-5.08-H-P2.6-BK-HT	50950025327R	330
3	16.44	STLZ950/3G-5.08-H-P2.6-BK-HT	50950035327R	330
4	21.52	STLZ950/4G-5.08-H-P2.6-BK-HT	50950045327R	330
5	26.60	STLZ950/5G-5.08-H-P2.6-BK-HT	50950055327R	330
6	31.68	STLZ950/6G-5.08-H-P2.6-BK-HT	50950065327R	330
7	36.76	STLZ950/7G-5.08-H-P2.6-BK-HT	50950075327R	330
8	41.84	STLZ950/8G-5.08-H-P2.6-BK-HT	50950085327R	330

[1]Colours according to RAL, there may be variations on colour due to production conditions.

Spacing 5.0 mm / Spacing 5.08 mm

STL950/..G-5.0-H-GREEN-HC
STLZ950/..G-5.08-H-GREEN-HC

WIRE SIZES	
solid min	-
solid max	-
stranded min	-
stranded max	-
stranded with ferrule min	-
stranded with ferrule max	-
DIMENSIONS	
Stripped Length	-
PCB Hole Diameter	1.4 mm
MATERIALS	
Contact Pin	Copper Alloy
INSULATING MATERIAL	
Material	PA 6.6
Flammability Class	UL 94 V-0
TEMPERATURES	
Operating Temperature (without mech. load)	-40 °C - 105 °C
WAVE SOLDERING PROCESS	
Soldering Temperature, recommended	260 °C
Peak Soldering Time, recommended	3-4 s
REFLOW PROCESS	
Soldering Temperature, recommended	-
Peak Soldering Time, recommended	-

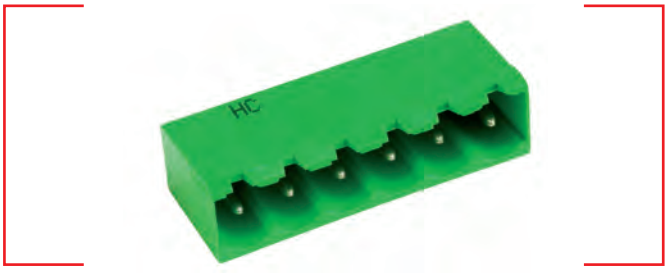

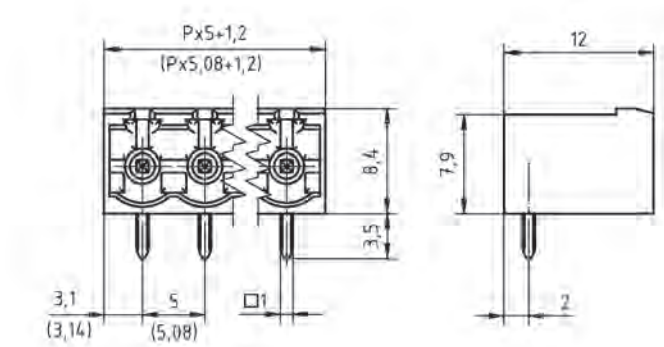

COLOURS1			
GREEN, RAL 6018		BLACK, RAL 9011	
PEBBLE GREY, RAL 7032		LIGHT GREEN, similar RAL 6018	

COUNTERPARTS (SPACING 5.0 MM)
PCB Terminal Block
AK950

COUNTERPARTS (SPACING 5.08 MM)
PCB Terminal Block
AKZ950

ORDER DATA (SPACING 5.0 MM)

Poles	Width (mm)	Article Designation	Article Number	PU
2	11.20	STL950/2G-5.0-H-GREEN-HC	50950025009F	200
3	16.20	STL950/3G-5.0-H-GREEN-HC	50950035009F	200
4	21.20	STL950/4G-5.0-H-GREEN-HC	50950045009F	200
5	26.20	STL950/5G-5.0-H-GREEN-HC	50950055009E	100
6	31.20	STL950/6G-5.0-H-GREEN-HC	50950065009E	100
7	36.20	STL950/7G-5.0-H-GREEN-HC	50950075009E	100
8	41.20	STL950/8G-5.0-H-GREEN-HC	50950085009D	50
9	46.20	STL950/9G-5.0-H-GREEN-HC	50950095009D	50
...	...	...	...	...
12	61.20	STL950/12G-5.0-H-GREEN-HC	50950125009D	50

ORDER DATA (SPACING 5.08 MM)

Poles	Width (mm)	Article Designation	Article Number	PU
2	11.36	STLZ950/2G-5.08-H-GREEN-HC	50950025029F	200
3	16.44	STLZ950/3G-5.08-H-GREEN-HC	50950035029F	200
4	21.52	STLZ950/4G-5.08-H-GREEN-HC	50950045029F	200
5	26.60	STLZ950/5G-5.08-H-GREEN-HC	50950055029E	100
6	31.68	STLZ950/6G-5.08-H-GREEN-HC	50950065029E	100
7	36.76	STLZ950/7G-5.08-H-GREEN-HC	50950075029E	100
8	41.84	STLZ950/8G-5.08-H-GREEN-HC	50950085029D	50
9	46.92	STLZ950/9G-5.08-H-GREEN-HC	50950095029D	50
...	...	...	...	...
12	62.16	STLZ950/12G-5.08-H-GREEN-HC	50950125029D	50

ACCESSORIES

	Description	Article Number
	Coding Star CS2-5.0/5.08-RED	50000000024
	Separating Element SE-STL950-GREEN	50950000002

RATINGS	cULus			VDE
Usegroup	B	C	D	
Rated Voltage	300 V	150 V	300 V	250 V
Rated Current	16 A	16 A	10 A	16 A
Overvoltage Category				III
Test Voltage	1.6 kV	1.3 kV	1.6 kV	4.0 kV
Pollution Degree				3

[1]Colours according to RAL, there may be variations on colour due to production conditions. Special colours on request.

L'IMPULSION Retrouvez nous sur www.limpulsion.fr

STL950/..G-5.0-H-P2.6-BK-HC-HT
STLZ950/..G-5.08-H-P2.6-BK-HC-HT

Spacing 5.0 mm / Spacing 5.08 mm



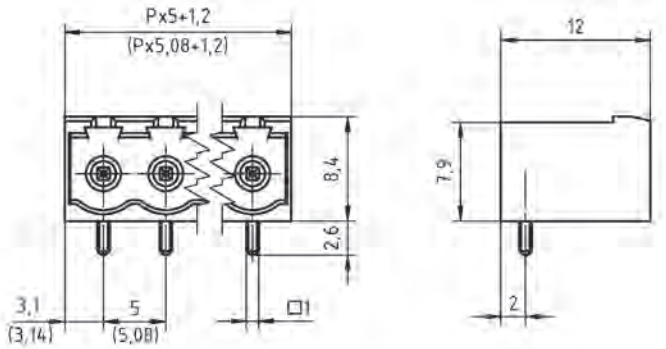

WIRE SIZES	
solid min	-
solid max	-
stranded min	-
stranded max	-
stranded with ferrule min	-
stranded with ferrule max	-
DIMENSIONS	
Stripped Length	-
PCB Hole Diameter	1.4 mm
MATERIALS	
Contact Pin	Copper Alloy
INSULATING MATERIAL	
Material	PPA
Flammability Class	UL 94 V-0
TEMPERATURES	
Operating Temperature (without mech. load)	-40 °C - 105 °C
WAVE SOLDERING PROCESS	
Soldering Temperature, recommended	260 °C
Peak Soldering Time, recommended	3-4 s
REFLOW PROCESS	
Soldering Temperature, recommended	217 °C - 245 °C
Peak Soldering Time, recommended	60 s

COLOURS[1]
BLACK, RAL 9011

COUNTERPARTS (SPACING 5.0 MM)
PCB Terminal Block
AK950

COUNTERPARTS (SPACING 5.08 MM)
PCB Terminal Block
AKZ950

ACCESSORIES

	Description	Article Number
	Coding Star CS2-5.0/5.08-LIGHT GREY-HT	50000000028

ORDER DATA (SPACING 5.0 MM)

Poles	Width (mm)	Article Designation	Article Number	PU
2	11.20	STL950/2G-5.0-H-P2.6-BK-HC-HT	50950025349F	200
3	16.20	STL950/3G-5.0-H-P2.6-BK-HC-HT	50950035349F	200
4	21.20	STL950/4G-5.0-H-P2.6-BK-HC-HT	50950045349F	200
5	26.20	STL950/5G-5.0-H-P2.6-BK-HC-HT	50950055349E	100
6	31.20	STL950/6G-5.0-H-P2.6-BK-HC-HT	50950065349E	100
7	36.20	STL950/7G-5.0-H-P2.6-BK-HC-HT	50950075349E	100
8	41.20	STL950/8G-5.0-H-P2.6-BK-HC-HT	50950085349D	50
9	46.20	STL950/9G-5.0-H-P2.6-BK-HC-HT	50950095349D	50
...	...	...	...	...
12	61.20	STL950/12G-5.0-H-P2.6-BK-HC-HT	50950125349D	50

RATINGS

	c UL us			VDE
Usegroup	B	C	D	
Rated Voltage	300 V	150 V	300 V	250 V
Rated Current	16 A	16 A	10 A	16 A
Overvoltage Category				III
Test Voltage	1.6 kV	1.3 kV	1.6 kV	4.0 kV
Pollution Degree				3

ORDER DATA (SPACING 5.08 MM)

Poles	Width (mm)	Article Designation	Article Number	PU
2	11.36	STLZ950/2G-5.08-H-P2.6-BK-HC-HT	50950025329F	200
3	16.44	STLZ950/3G-5.08-H-P2.6-BK-HC-HT	50950035329F	200
4	21.52	STLZ950/4G-5.08-H-P2.6-BK-HC-HT	50950045329F	200
5	26.60	STLZ950/5G-5.08-H-P2.6-BK-HC-HT	50950055329E	100
6	31.68	STLZ950/6G-5.08-H-P2.6-BK-HC-HT	50950065329E	100
7	36.76	STLZ950/7G-5.08-H-P2.6-BK-HC-HT	50950075329E	100
8	41.84	STLZ950/8G-5.08-H-P2.6-BK-HC-HT	50950085329D	50
9	46.92	STLZ950/9G-5.08-H-P2.6-BK-HC-HT	50950095329D	50
...	...	...	...	...
12	62.16	STLZ950/12G-5.08-H-P2.6-BK-HC-HT	50950125329D	50

[1]Colours according to RAL, there may be variations on colour due to production conditions.

Spacing 5.0 mm / Spacing 5.08 mm

STL950/..G-5.0-H-P2.6-BK-HC-HT
STLZ950/..G-5.08-H-P2.6-BK-HC-HT

WIRE SIZES	
solid min	-
solid max	-
stranded min	-
stranded max	-
stranded with ferrule min	-
stranded with ferrule max	-
DIMENSIONS	
Stripped Length	-
PCB Hole Diameter	1.4 mm
MATERIALS	
Contact Pin	Copper Alloy
INSULATING MATERIAL	
Material	PPA
Flammability Class	UL 94 V-0
TEMPERATURES	
Operating Temperature (without mech. load)	-40 °C - 105 °C
WAVE SOLDERING PROCESS	
Soldering Temperature, recommended	260 °C
Peak Soldering Time, recommended	3-4 s
REFLOW PROCESS	
Soldering Temperature, recommended	217 °C - 245 °C
Peak Soldering Time, recommended	60 s



Technical Drawing see page 296

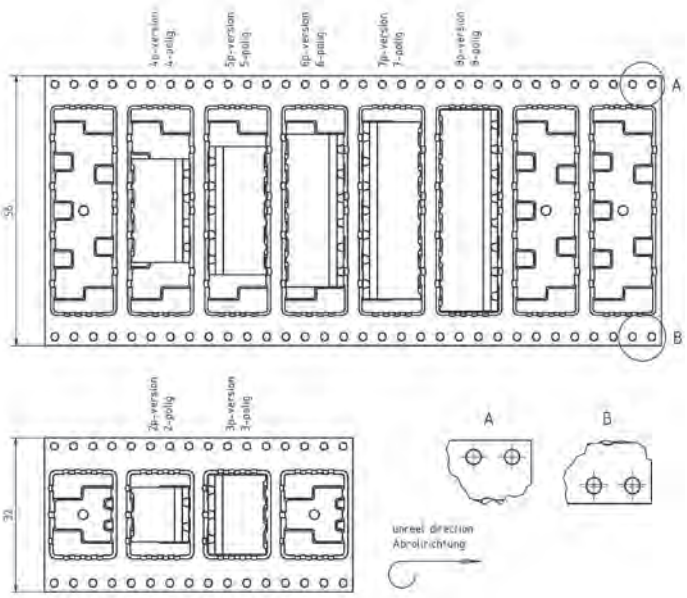

COLOURS[1]	
	BLACK, RAL 9011

COUNTERPARTS (SPACING 5.0 MM)
PCB Terminal Block
AK950

COUNTERPARTS (SPACING 5.08 MM)
PCB Terminal Block
AKZ950

TAPE-ON-REEL

Poles	Reel (RD/")	Width (R/mm)	Pitch (RP/mm)	Pieces (PCS)
2-3	13	32	16	330
4-8	13	56	16	330

ACCESSORIES

	Description	Article Number
	Coding Star CS2-5.0/5.08-LIGHT GREY-HT	50000000028

ORDER DATA (SPACING 5.0 MM)

Poles	Width (mm)	Article Designation	Article Number	PU
2	11.20	STL950/2G-5.0-H-P2.6-BK-HC-HT	50950025349R	330
3	16.20	STL950/3G-5.0-H-P2.6-BK-HC-HT	50950035349R	330
4	21.20	STL950/4G-5.0-H-P2.6-BK-HC-HT	50950045349R	330
5	26.20	STL950/5G-5.0-H-P2.6-BK-HC-HT	50950055349R	330
6	31.20	STL950/6G-5.0-H-P2.6-BK-HC-HT	50950065349R	330
7	36.20	STL950/7G-5.0-H-P2.6-BK-HC-HT	50950075349R	330
8	41.20	STL950/8G-5.0-H-P2.6-BK-HC-HT	50950085349R	330

ORDER DATA (SPACING 5.08 MM)

Poles	Width (mm)	Article Designation	Article Number	PU
2	11.36	STLZ950/2G-5.08-H-P2.6-BK-HC-HT	50950025329R	330
3	16.44	STLZ950/3G-5.08-H-P2.6-BK-HC-HT	50950035329R	330
4	21.52	STLZ950/4G-5.08-H-P2.6-BK-HC-HT	50950045329R	330
5	26.60	STLZ950/5G-5.08-H-P2.6-BK-HC-HT	50950055329R	330
6	31.68	STLZ950/6G-5.08-H-P2.6-BK-HC-HT	50950065329R	330
7	36.76	STLZ950/7G-5.08-H-P2.6-BK-HC-HT	50950075329R	330
8	41.84	STLZ950/8G-5.08-H-P2.6-BK-HC-HT	50950085329R	330

RATINGS

	c UL us			VDE
Usegroup	B	C	D	
Rated Voltage	300 V	150 V	300 V	250 V
Rated Current	16 A	16 A	10 A	16 A
Overvoltage Category				III
Test Voltage	1.6 kV	1.3 kV	1.6 kV	4.0 kV
Pollution Degree				3

[1]Colours according to RAL, there may be variations on colour due to production conditions.

L'IMPULSION Retrouvez nous sur www.limpulsion.fr

STL950/..F-5.0-H-GREEN
STLZ950/..F-5.08-H-GREEN

Spacing 5.0 mm / Spacing 5.08 mm

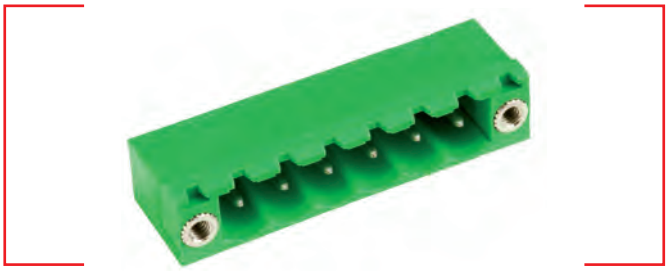

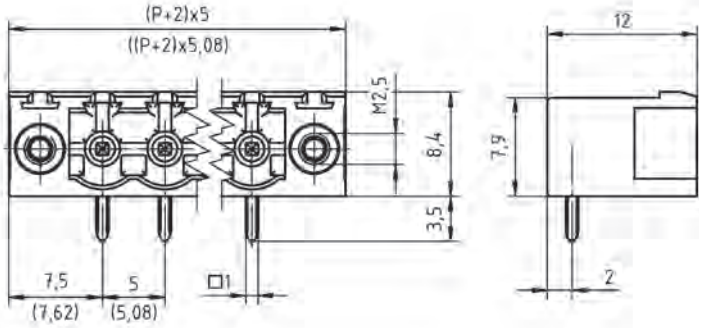

WIRE SIZES	
solid min	-
solid max	-
stranded min	-
stranded max	-
stranded with ferrule min	-
stranded with ferrule max	-
DIMENSIONS	
Stripped Length	-
PCB Hole Diameter	1.4 mm
MATERIALS	
Thread Insert, Flange	Brass
Contact Pin	Copper Alloy
INSULATING MATERIAL	
Material	PA 6.6
Flammability Class	UL 94 V-0
TEMPERATURES	
Operating Temperature (without mech. load)	-40 °C - 105 °C
WAVE SOLDERING PROCESS	
Soldering Temperature, recommended	260 °C
Peak Soldering Time, recommended	3-4 s
REFLOW PROCESS	
Soldering Temperature, recommended	-
Peak Soldering Time, recommended	-

COLOURS[1]

GREEN, RAL 6018	BASALT GREY, RAL 7012
LIGHT GREEN, similar RAL 6018	

COUNTERPARTS (SPACING 5.0 MM)

PCB Terminal Block

AK950 AK1200 AK4951

COUNTERPARTS (SPACING 5.08 MM)

PCB Terminal Block

AKZ950 AKZ1100 AKZ1110 AKZ1200 AKZ4951

ACCESSORIES

	Description	Article Number
	Coding Star CS2-5.0/5.08-RED	50000000024
	Separating Element SE-STL950-GREEN	50950000002

RATINGS

Usegroup	B	C	D	
Rated Voltage	300 V	150 V	300 V	250 V
Rated Current	15 A	15 A	10 A	12 A
Overvoltage Category				III
Test Voltage	1.6 kV	1.3 kV	1.6 kV	4.0 kV
Pollution Degree				3

ORDER DATA (SPACING 5.0 MM)

Poles	Width (mm)	Article Designation	Article Number	PU
2	20.00	STL950/2F-5.0-H-GREEN	50950026001E	100
3	25.00	STL950/3F-5.0-H-GREEN	50950036001E	100
4	30.00	STL950/4F-5.0-H-GREEN	50950046001E	100
5	35.00	STL950/5F-5.0-H-GREEN	50950056001E	100
6	40.00	STL950/6F-5.0-H-GREEN	50950066001D	50
7	45.00	STL950/7F-5.0-H-GREEN	50950076001D	50
8	50.00	STL950/8F-5.0-H-GREEN	50950086001D	50
9	55.00	STL950/9F-5.0-H-GREEN	50950096001D	50
...	...	...	...	...
24	130.00	STL950/24F-5.0-H-GREEN	50950246001D	50

ORDER DATA (SPACING 5.08 MM)

Poles	Width (mm)	Article Designation	Article Number	PU
2	20.32	STLZ950/2F-5.08-H-GREEN	50950026021E	100
3	25.40	STLZ950/3F-5.08-H-GREEN	50950036021E	100
4	30.48	STLZ950/4F-5.08-H-GREEN	50950046021E	100
5	35.56	STLZ950/5F-5.08-H-GREEN	50950056021E	100
6	40.64	STLZ950/6F-5.08-H-GREEN	50950066021D	50
7	45.72	STLZ950/7F-5.08-H-GREEN	50950076021D	50
8	50.80	STLZ950/8F-5.08-H-GREEN	50950086021D	50
9	55.88	STLZ950/9F-5.08-H-GREEN	50950096021D	50
...	...	...	...	...
24	132.08	STLZ950/24F-5.08-H-GREEN	50950246021D	50

[1]Colours according to RAL, there may be variations on colour due to production conditions. Special colours on request.

Spacing 5.0 mm / Spacing 5.08 mm

STL950/..F-5.0-H-P2.6-BK-HT
STLZ950/..F-5.08-H-P2.6-BK-HT

WIRE SIZES	
solid min	-
solid max	-
stranded min	-
stranded max	-
stranded with ferrule min	-
stranded with ferrule max	-
DIMENSIONS	
Stripped Length	-
PCB Hole Diameter	1.4 mm
MATERIALS	
Thread Insert, Flange	Brass
Contact Pin	Copper Alloy
INSULATING MATERIAL	
Material	PPA
Flammability Class	UL 94 V-0
TEMPERATURES	
Operating Temperature (without mech. load)	-40 °C - 105 °C
WAVE SOLDERING PROCESS	
Soldering Temperature, recommended	260 °C
Peak Soldering Time, recommended	3-4 s
REFLOW PROCESS	
Soldering Temperature, recommended	217 °C - 245 °C
Peak Soldering Time, recommended	60 s



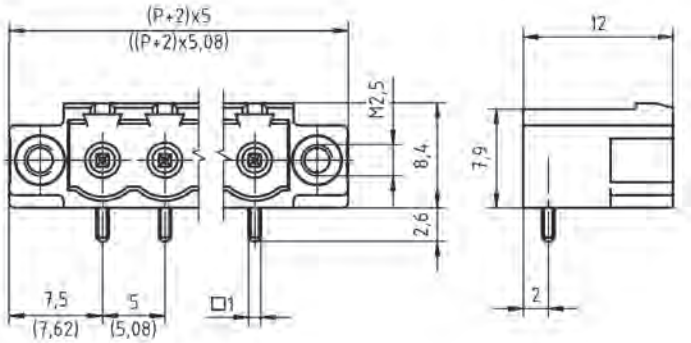

COLOURS[1]
BLACK, RAL 9011

COUNTERPARTS (SPACING 5.0 MM)
PCB Terminal Block
AK950 AK1200 AK4951

COUNTERPARTS (SPACING 5.08 MM)
PCB Terminal Block
AKZ950 AKZ1100 AKZ1110 AKZ1200 AKZ4951

ORDER DATA (SPACING 5.0 MM)

Poles	Width (mm)	Article Designation	Article Number	PU
2	20.00	STL950/2F-5.0-H-P2.6-BK-HT	50950026347E	100
3	25.00	STL950/3F-5.0-H-P2.6-BK-HT	50950036347E	100
4	30.00	STL950/4F-5.0-H-P2.6-BK-HT	50950046347E	100
5	35.00	STL950/5F-5.0-H-P2.6-BK-HT	50950056347E	100
6	40.00	STL950/6F-5.0-H-P2.6-BK-HT	50950066347D	50
7	45.00	STL950/7F-5.0-H-P2.6-BK-HT	50950076347D	50
8	50.00	STL950/8F-5.0-H-P2.6-BK-HT	50950086347D	50
9	55.00	STL950/9F-5.0-H-P2.6-BK-HT	50950096347D	50
...	...	...	...	...
12	70.00	STL950/12F-5.0-H-P2.6-BK-HT	50950126347D	50

ORDER DATA (SPACING 5.08 MM)

Poles	Width (mm)	Article Designation	Article Number	PU
2	20.32	STLZ950/2F-5.08-H-P2.6-BK-HT	50950026327E	100
3	25.40	STLZ950/3F-5.08-H-P2.6-BK-HT	50950036327E	100
4	30.48	STLZ950/4F-5.08-H-P2.6-BK-HT	50950046327E	100
5	35.56	STLZ950/5F-5.08-H-P2.6-BK-HT	50950056327E	100
6	40.64	STLZ950/6F-5.08-H-P2.6-BK-HT	50950066327D	50
7	45.72	STLZ950/7F-5.08-H-P2.6-BK-HT	50950076327D	50
8	50.80	STLZ950/8F-5.08-H-P2.6-BK-HT	50950086327D	50
9	55.88	STLZ950/9F-5.08-H-P2.6-BK-HT	50950096327D	50
...	...	...	...	...
12	71.12	STLZ950/12F-5.08-H-P2.6-BK-HT	50950126327D	50

ACCESSORIES

	Description	Article Number
	Coding Star CS2-5.0/5.08-LIGHT GREY-HT	50000000028

RATINGS	c UL us			VDE
Usegroup	B	C	D	
Rated Voltage	300 V	150 V	300 V	250 V
Rated Current	15 A	15 A	10 A	12 A
Overvoltage Category				III
Test Voltage	1.6 kV	1.3 kV	1.6 kV	4.0 kV
Pollution Degree				3

[1]Colours according to RAL, there may be variations on colour due to production conditions.

L'IMPULSION
Retrouvez nous sur
www.limpulsion.fr

STL950/..F-5.0-H-P2.6-BK-HT
STLZ950/..F-5.08-H-P2.6-BK-HT

Spacing 5.0 mm / Spacing 5.08 mm



Technical Drawing see page 299

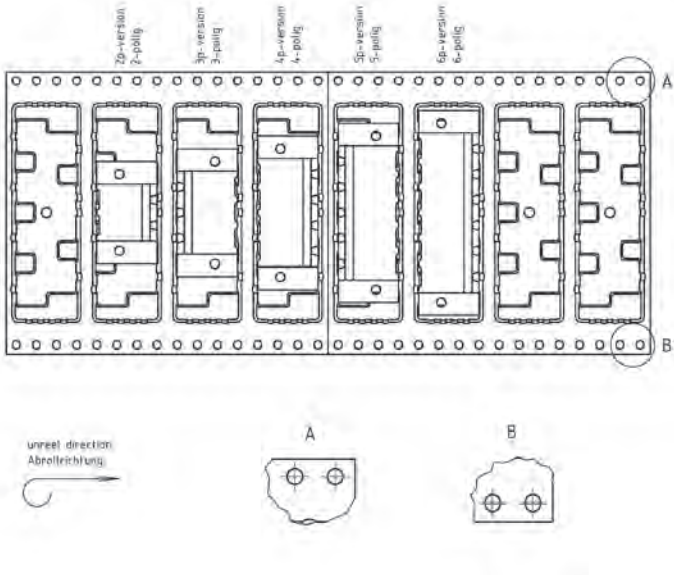

WIRE SIZES	
solid min	-
solid max	-
stranded min	-
stranded max	-
stranded with ferrule min	-
stranded with ferrule max	-
DIMENSIONS	
Stripped Length	-
PCB Hole Diameter	1.4 mm
MATERIALS	
Thread Insert, Flange	Brass
Contact Pin	Copper Alloy
INSULATING MATERIAL	
Material	PPA
Flammability Class	UL 94 V-0
TEMPERATURES	
Operating Temperature (without mech. load)	-40 °C - 105 °C
WAVE SOLDERING PROCESS	
Soldering Temperature, recommended	260 °C
Peak Soldering Time, recommended	3-4 s
REFLOW PROCESS	
Soldering Temperature, recommended	217 °C - 245 °C
Peak Soldering Time, recommended	60 s

COLOURS[1]

BLACK, RAL 9011

COUNTERPARTS (SPACING 5.0 MM)

PCB Terminal Block

AK950 AK1200 AK4951

COUNTERPARTS (SPACING 5.08 MM)

PCB Terminal Block

AKZ950 AKZ1100 AKZ1110 AKZ1200 AKZ4951

ACCESSORIES

	Description	Article Number
	Coding Star CS2-5.0/5.08-LIGHT GREY-HT	50000000028

TAPE-ON-REEL

Poles	Reel (RD/")	Width (R/mm)	Pitch (RP/mm)	Pieces (PCS)
2-6	13	56	16	330

RATINGS

	c UL us			VDE
Usegroup	B	C	D	
Rated Voltage	300 V	150 V	300 V	250 V
Rated Current	15 A	15 A	10 A	12 A
Overvoltage Category				III
Test Voltage	1.6 kV	1.3 kV	1.6 kV	4.0 kV
Pollution Degree				3

ORDER DATA (SPACING 5.0 MM)

Poles	Width (mm)	Article Designation	Article Number	PU
2	20.00	STL950/2F-5.0-H-P2.6-BK-HT	50950026347R	330
3	25.00	STL950/3F-5.0-H-P2.6-BK-HT	50950036347R	330
4	30.00	STL950/4F-5.0-H-P2.6-BK-HT	50950046347R	330
5	35.00	STL950/5F-5.0-H-P2.6-BK-HT	50950056347R	330
6	40.00	STL950/6F-5.0-H-P2.6-BK-HT	50950066347R	330

ORDER DATA (SPACING 5.08 MM)

Poles	Width (mm)	Article Designation	Article Number	PU
2	20.32	STLZ950/2F-5.08-H-P2.6-BK-HT	50950026327R	330
3	25.40	STLZ950/3F-5.08-H-P2.6-BK-HT	50950036327R	330
4	30.48	STLZ950/4F-5.08-H-P2.6-BK-HT	50950046327R	330
5	35.56	STLZ950/5F-5.08-H-P2.6-BK-HT	50950056327R	330
6	40.64	STLZ950/6F-5.08-H-P2.6-BK-HT	50950066327R	330

[1]Colours according to RAL, there may be variations on colour due to production conditions.

Spacing 5.0 mm / Spacing 5.08 mm

STL950/..F-5.0-H-GREEN-HC
STLZ950/..F-5.08-H-GREEN-HC

WIRE SIZES	
solid min	-
solid max	-
stranded min	-
stranded max	-
stranded with ferrule min	-
stranded with ferrule max	-
DIMENSIONS	
Stripped Length	-
PCB Hole Diameter	1.4 mm
MATERIALS	
Thread Insert, Flange	Brass
Contact Pin	Copper Alloy
INSULATING MATERIAL	
Material	PA 6.6
Flammability Class	UL 94 V-0
TEMPERATURES	
Operating Temperature (without mech. load)	-40 °C - 105 °C
WAVE SOLDERING PROCESS	
Soldering Temperature, recommended	260 °C
Peak Soldering Time, recommended	3-4 s
REFLOW PROCESS	
Soldering Temperature, recommended	-
Peak Soldering Time, recommended	-



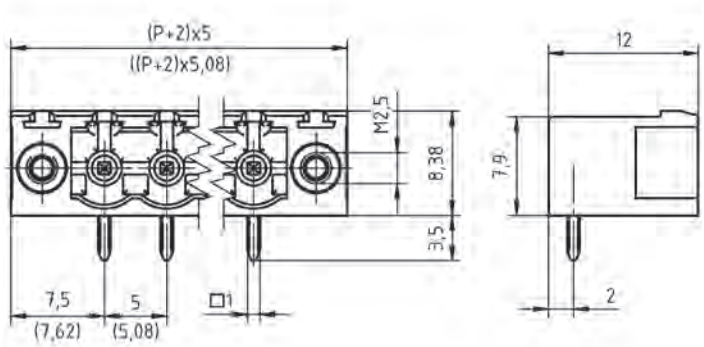

COLOURS[1]

GREEN, RAL 6018 — LIGHT GREEN, similar RAL 6018

COUNTERPARTS (SPACING 5.0 MM)

PCB Terminal Block
AK950

COUNTERPARTS (SPACING 5.08 MM)

PCB Terminal Block
AKZ950

ORDER DATA (SPACING 5.0 MM)

Poles	Width (mm)	Article Designation	Article Number	PU
2	20.00	STL950/2F-5.0-H-GREEN-HC	50950026019E	100
3	25.00	STL950/3F-5.0-H-GREEN-HC	50950036019E	100
4	30.00	STL950/4F-5.0-H-GREEN-HC	50950046019D	50
5	35.00	STL950/5F-5.0-H-GREEN-HC	50950056019D	50
6	40.00	STL950/6F-5.0-H-GREEN-HC	50950066019D	50
7	45.00	STL950/7F-5.0-H-GREEN-HC	50950076019D	50
8	50.00	STL950/8F-5.0-H-GREEN-HC	50950086019D	50
9	55.00	STL950/9F-5.0-H-GREEN-HC	50950096019D	50
...	...	...	...	...
12	70.00	STL950/12F-5.0-H-GREEN-HC	50950126019D	50

ORDER DATA (SPACING 5.08 MM)

Poles	Width (mm)	Article Designation	Article Number	PU
2	20.32	STLZ950/2F-5.08-H-GREEN-HC	50950026039E	100
3	25.40	STLZ950/3F-5.08-H-GREEN-HC	50950036039E	100
4	30.48	STLZ950/4F-5.08-H-GREEN-HC	50950046039D	50
5	35.56	STLZ950/5F-5.08-H-GREEN-HC	50950056039D	50
6	40.64	STLZ950/6F-5.08-H-GREEN-HC	50950066039D	50
7	45.72	STLZ950/7F-5.08-H-GREEN-HC	50950076039D	50
8	50.80	STLZ950/8F-5.08-H-GREEN-HC	50950086039D	50
9	55.88	STLZ950/9F-5.08-H-GREEN-HC	50950096039D	50
...	...	...	...	...
12	71.12	STLZ950/12F-5.08-H-GREEN-HC	50950126039D	50

ACCESSORIES

	Description	Article Number
	Coding Star CS2-5.0/5.08-RED	50000000024
	Separating Element SE-STL950-GREEN	50950000002

RATINGS

	c UL us			VDE
Usegroup	B	C	D	
Rated Voltage	300 V	150 V	300 V	250 V
Rated Current	16 A	16 A	10 A	16 A
Overvoltage Category				III
Test Voltage	1.6 kV	1.3 kV	1.6 kV	4.0 kV
Pollution Degree				3

[1]Colours according to RAL, there may be variations on colour due to production conditions. Special colours on request.

L'IMPULSION Retrouvez nous sur www.limpulsion.fr

STL950/..F-5.0-H-P2.6-BK-HC-HT
STLZ950/..F-5.08-H-P2.6-BK-HC-HT

Spacing 5.0 mm / Spacing 5.08 mm



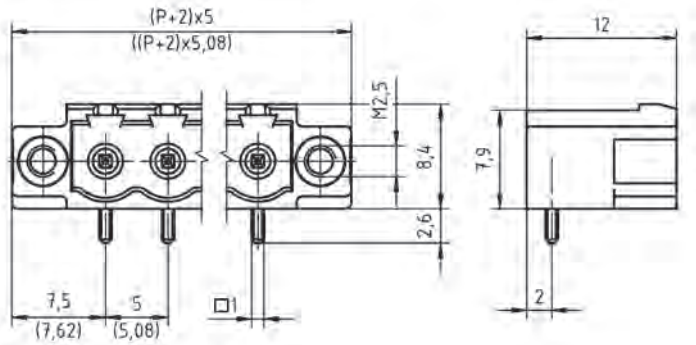

WIRE SIZES	
solid min	-
solid max	-
stranded min	-
stranded max	-
stranded with ferrule min	-
stranded with ferrule max	-
DIMENSIONS	
Stripped Length	-
PCB Hole Diameter	1.4 mm
MATERIALS	
Thread Insert, Flange	Brass
Contact Pin	Copper Alloy
INSULATING MATERIAL	
Material	PPA
Flammability Class	UL 94 V-0
TEMPERATURES	
Operating Temperature (without mech. load)	-40 °C - 105 °C
WAVE SOLDERING PROCESS	
Soldering Temperature, recommended	260 °C
Peak Soldering Time, recommended	3-4 s
REFLOW PROCESS	
Soldering Temperature, recommended	217 °C - 245 °C
Peak Soldering Time, recommended	60 s

COLOURS[1]

BLACK, RAL 9011

COUNTERPARTS (SPACING 5.0 MM)

PCB Terminal Block

AK950

COUNTERPARTS (SPACING 5.08 MM)

PCB Terminal Block

AKZ950

ACCESSORIES

	Description	Article Number
	Coding Star CS2-5.0/5.08-LIGHT GREY-HT	50000000028

ORDER DATA (SPACING 5.0 MM)

Poles	Width (mm)	Article Designation	Article Number	PU
2	20.00	STL950/2F-5.0-H-P2.6-BK-HC-HT	50950026349E	100
3	25.00	STL950/3F-5.0-H-P2.6-BK-HC-HT	50950036349E	100
4	30.00	STL950/4F-5.0-H-P2.6-BK-HC-HT	50950046349D	50
5	35.00	STL950/5F-5.0-H-P2.6-BK-HC-HT	50950056349D	50
6	40.00	STL950/6F-5.0-H-P2.6-BK-HC-HT	50950066349D	50
7	45.00	STL950/7F-5.0-H-P2.6-BK-HC-HT	50950076349D	50
8	50.00	STL950/8F-5.0-H-P2.6-BK-HC-HT	50950086349D	50
9	55.00	STL950/9F-5.0-H-P2.6-BK-HC-HT	50950096349D	50
...	...	...	...	...
12	70.00	STL950/12F-5.0-H-P2.6-BK-HC-HT	50950126349D	50

RATINGS

	c UL us			VDE
Usegroup	B	C	D	
Rated Voltage	300 V	150 V	300 V	250 V
Rated Current	16 A	16 A	10 A	16 A
Overvoltage Category				III
Test Voltage	1.6 kV	1.3 kV	1.6 kV	4.0 kV
Pollution Degree				3

ORDER DATA (SPACING 5.08 MM)

Poles	Width (mm)	Article Designation	Article Number	PU
2	20.32	STLZ950/2F-5.08-H-P2.6-BK-HC-HT	50950026329E	100
3	25.40	STLZ950/3F-5.08-H-P2.6-BK-HC-HT	50950036329E	100
4	30.48	STLZ950/4F-5.08-H-P2.6-BK-HC-HT	50950046329D	50
5	35.56	STLZ950/5F-5.08-H-P2.6-BK-HC-HT	50950056329D	50
6	40.64	STLZ950/6F-5.08-H-P2.6-BK-HC-HT	50950066329D	50
7	45.72	STLZ950/7F-5.08-H-P2.6-BK-HC-HT	50950076329D	50
8	50.80	STLZ950/8F-5.08-H-P2.6-BK-HC-HT	50950086329D	50
9	55.88	STLZ950/9F-5.08-H-P2.6-BK-HC-HT	50950096329D	50
...	...	...	...	...
12	71.12	STLZ950/12F-5.08-H-P2.6-BK-HC-HT	50950126329D	50

[1]Colours according to RAL, there may be variations on colour due to production conditions.

Spacing 5.0 mm / Spacing 5.08 mm

STL950/..F-5.0-H-P2.6-BK-HC-HT
STLZ950/..F-5.08-H-P2.6-BK-HC-HT

WIRE SIZES	
solid min	-
solid max	-
stranded min	-
stranded max	-
stranded with ferrule min	-
stranded with ferrule max	-
DIMENSIONS	
Stripped Length	-
PCB Hole Diameter	1.4 mm
MATERIALS	
Thread Insert, Flange	Brass
Contact Pin	Copper Alloy
INSULATING MATERIAL	
Material	PPA
Flammability Class	UL 94 V-0
TEMPERATURES	
Operating Temperature (without mech. load)	-40 °C - 105 °C
WAVE SOLDERING PROCESS	
Soldering Temperature, recommended	260 °C
Peak Soldering Time, recommended	3-4 s
REFLOW PROCESS	
Soldering Temperature, recommended	217 °C - 245 °C
Peak Soldering Time, recommended	60 s



Technical Drawing see page 302

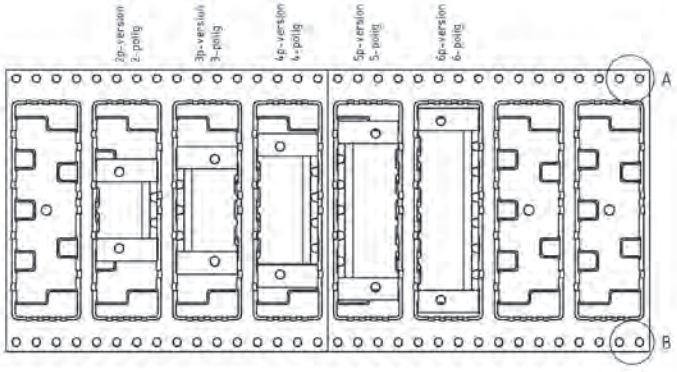

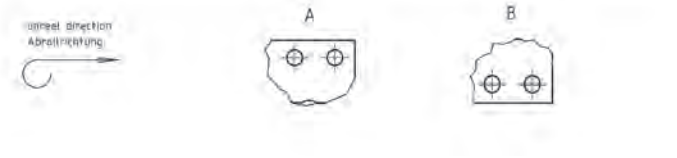

COLOURS[1]	
	BLACK, RAL 9011

COUNTERPARTS (SPACING 5.0 MM)
PCB Terminal Block
AK950

COUNTERPARTS (SPACING 5.08 MM)
PCB Terminal Block
AKZ950

TAPE-ON-REEL

Poles	Reel (RD/")	Width (R/mm)	Pitch (RP/mm)	Pieces (PCS)
2-6	13	56	16	330

ACCESSORIES

	Description	Article Number
	Coding Star CS2-5.0/5.08-LIGHT GREY-HT	50000000028

ORDER DATA (SPACING 5.0 MM)

Poles	Width (mm)	Article Designation	Article Number	PU
2	20.00	STL950/2F-5.0-H-P2.6-BK-HC-HT	50950026349R	330
3	25.00	STL950/3F-5.0-H-P2.6-BK-HC-HT	50950036349R	330
4	30.00	STL950/4F-5.0-H-P2.6-BK-HC-HT	50950046349R	330
5	35.00	STL950/5F-5.0-H-P2.6-BK-HC-HT	50950056349R	330
6	40.00	STL950/6F-5.0-H-P2.6-BK-HC-HT	50950066349R	330

ORDER DATA (SPACING 5.08 MM)

Poles	Width (mm)	Article Designation	Article Number	PU
2	20.32	STLZ950/2F-5.08-H-P2.6-BK-HC-HT	50950026329R	330
3	25.40	STLZ950/3F-5.08-H-P2.6-BK-HC-HT	50950036329R	330
4	30.48	STLZ950/4F-5.08-H-P2.6-BK-HC-HT	50950046329R	330
5	35.56	STLZ950/5F-5.08-H-P2.6-BK-HC-HT	50950056329R	330
6	40.64	STLZ950/6F-5.08-H-P2.6-BK-HC-HT	50950066329R	330

RATINGS	c UL us			VDE
Usegroup	B	C	D	
Rated Voltage	300 V	150 V	300 V	250 V
Rated Current	16 A	16 A	10 A	16 A
Overvoltage Category				III
Test Voltage	1.6 kV	1.3 kV	1.6 kV	4.0 kV
Pollution Degree				3

[1]Colours according to RAL, there may be variations on colour due to production conditions.

L'IMPULSION
Retrouvez nous sur
www.limpulsion.fr

STLZ950/..-5.08-H-GREEN-INV

Spacing 5.08 mm



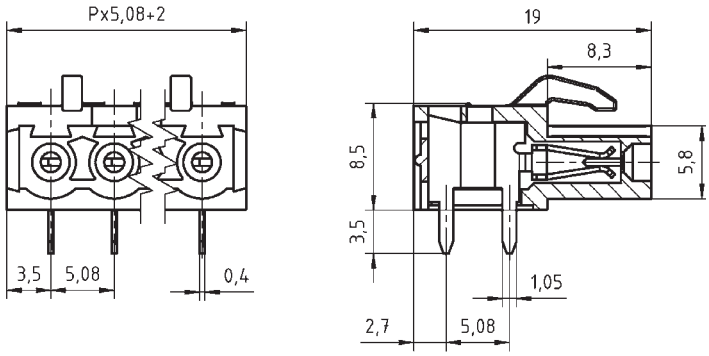

WIRE SIZES	
solid min	-
solid max	-
stranded min	-
stranded max	-
stranded with ferrule min	-
stranded with ferrule max	-
DIMENSIONS	
Stripped Length	-
PCB Hole Diameter	1.4 mm
MATERIALS	
Contact Spring	Bronze
INSULATING MATERIAL	
Material	PA 6.6
Flammability Class	UL 94 V-0
TEMPERATURES	
Operating Temperature (without mech. load)	-40 °C - 105 °C
WAVE SOLDERING PROCESS	
Soldering Temperature, recommended	260 °C
Peak Soldering Time, recommended	3-4 s
REFLOW PROCESS	
Soldering Temperature, recommended	-
Peak Soldering Time, recommended	-

COLOURS[1]

GREEN, RAL 6018

LIGHT GREEN, similar RAL 6018

COUNTERPARTS (SPACING 5.08 MM)

Pin Strip / PCB Terminal Block

STLZ950 STLZ990 STLZ970 AKZ950 AKZS950

ACCESSORIES

	Description	Article Number
	Coding Star CS4-5.0/5.08-RED	50000000026

RATINGS

		c UL us		VDE
Usegroup	B	C	D	
Rated Voltage	300 V	-	300 V	250 V
Rated Current	15 A	-	10 A	12 A
Overvoltage Category				III
Test Voltage	1.6 kV	-	1.6 kV	4.0 kV
Pollution Degree				3

ORDER DATA (SPACING 5.08 MM)

Poles	Width (mm)	Article Designation	Article Number	PU
2	12.16	STLZ950/2-5.08-H-GREEN-INV	50950029021F	200
3	17.24	STLZ950/3-5.08-H-GREEN-INV	50950039021F	200
4	22.32	STLZ950/4-5.08-H-GREEN-INV	50950049021F	200
5	27.40	STLZ950/5-5.08-H-GREEN-INV	50950059021E	100
6	32.48	STLZ950/6-5.08-H-GREEN-INV	50950069021E	100
7	37.56	STLZ950/7-5.08-H-GREEN-INV	50950079021E	100
8	42.64	STLZ950/8-5.08-H-GREEN-INV	50950089021D	50
9	47.72	STLZ950/9-5.08-H-GREEN-INV	50950099021D	50
10	52.80	STLZ950/10-5.08-H-GREEN-INV	50950109021D	50
11	57.88	STLZ950/11-5.08-H-GREEN-INV	50950119021D	50
12	62.96	STLZ950/12-5.08-H-GREEN-INV	50950129021D	50
13	68.04	STLZ950/13-5.08-H-GREEN-INV	50950139021D	50
14	73.12	STLZ950/14-5.08-H-GREEN-INV	50950149021D	50
15	78.20	STLZ950/15-5.08-H-GREEN-INV	50950159021D	50
16	83.28	STLZ950/16-5.08-H-GREEN-INV	50950169021D	50
17	88.36	STLZ950/17-5.08-H-GREEN-INV	50950179021D	50
18	93.44	STLZ950/18-5.08-H-GREEN-INV	50950189021D	50
19	98.52	STLZ950/19-5.08-H-GREEN-INV	50950199021D	50
20	103.60	STLZ950/20-5.08-H-GREEN-INV	50950209021D	50
21	108.68	STLZ950/21-5.08-H-GREEN-INV	50950219021D	50
22	113.76	STLZ950/22-5.08-H-GREEN-INV	50950229021D	50
23	118.84	STLZ950/23-5.08-H-GREEN-INV	50950239021D	50
24	123.92	STLZ950/24-5.08-H-GREEN-INV	50950249021D	50

[1]Colours according to RAL, there may be variations on colour due to production conditions. Special colours on request.

Spacing 5.0 mm

STL955/..-5.0-OL-GREEN

WIRE SIZES	
solid min	-
solid max	-
stranded min	-
stranded max	-
stranded with ferrule min	-
stranded with ferrule max	-
DIMENSIONS	
Stripped Length	-
PCB Hole Diameter	1.6 mm
MATERIALS	
Contact Pin	Brass
INSULATING MATERIAL	
Material	PA 6.6
Flammability Class	UL 94 V-0
TEMPERATURES	
Operating Temperature (without mech. load)	-40 °C - 105 °C
WAVE SOLDERING PROCESS	
Soldering Temperature, recommended	260 °C
Peak Soldering Time, recommended	3-4 s
REFLOW PROCESS	
Soldering Temperature, recommended	-
Peak Soldering Time, recommended	-



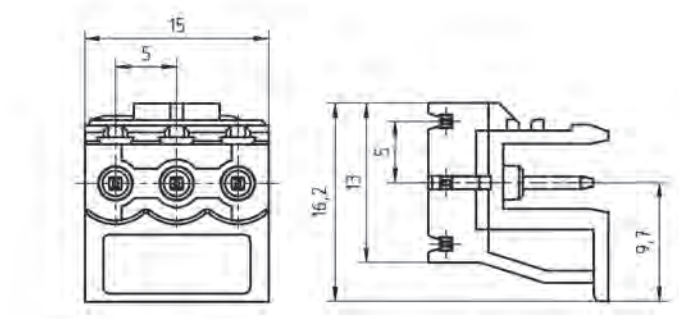

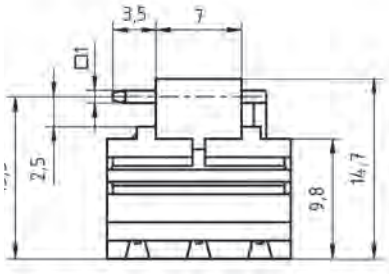

COLOURS[1]

GREEN, RAL 6018 — LIGHT GREEN, similar RAL 6018

COUNTERPARTS (SPACING 5.0 MM)

PCB Terminal Block

AK955 AK950 AK1100 AK1110 AK4951 AK3950

ORDER DATA (SPACING 5.0 MM)

Poles	Width (mm)	Article Designation	Article Number	PU
2	10.00	STL955/2-5.0-OL-GREEN	50955025061D	50
3	15.00	STL955/3-5.0-OL-GREEN	50955035061D	50
4	20.00	STL955/4-5.0-OL-GREEN	50955045061D	50

ACCESSORIES

	Description	Article Number
	Coding Star CS3-5.0/5.08-RED	50000000025

RATINGS

	cULus			VDE
Usegroup	B	C	D	
Rated Voltage	300 V	-	300 V	250 V
Rated Current	12 A	-	10 A	9 A
Overvoltage Category				III
Test Voltage	1.6 kV	-	1.6 kV	4.0 kV
Pollution Degree				3

[1]Colours according to RAL, there may be variations on colour due to production conditions. Special colours on request.

L'IMPULSION
Retrouvez nous sur
www.limpulsion.fr

STL955/..-5.0-OR-GREEN

Spacing 5.0 mm



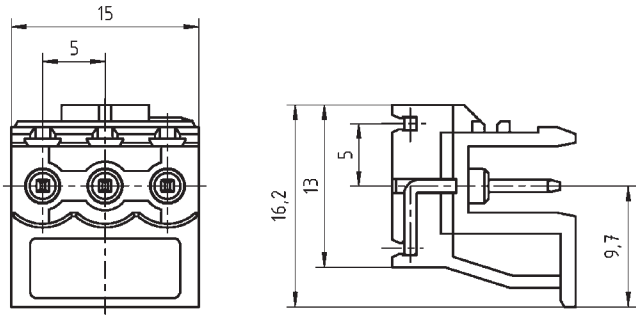

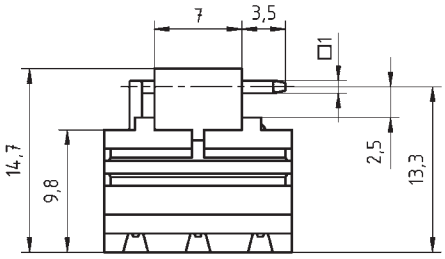

WIRE SIZES	
solid min	-
solid max	-
stranded min	-
stranded max	-
stranded with ferrule min	-
stranded with ferrule max	-
DIMENSIONS	
Stripped Length	-
PCB Hole Diameter	1.6 mm
MATERIALS	
Contact Pin	Brass
INSULATING MATERIAL	
Material	PA 6.6
Flammability Class	UL 94 V-0
TEMPERATURES	
Operating Temperature (without mech. load)	-40 °C - 105 °C
WAVE SOLDERING PROCESS	
Soldering Temperature, recommended	260 °C
Peak Soldering Time, recommended	3-4 s
REFLOW PROCESS	
Soldering Temperature, recommended	-
Peak Soldering Time, recommended	-

COLOURS[1]

GREEN, RAL 6018

LIGHT GREEN, similar RAL 6018

COUNTERPARTS (SPACING 5.0 MM)

PCB Terminal Block

AK955 AK950 AK1100 AK1110 AK4951 AK3950

ACCESSORIES

	Description	Article Number
	Coding Star CS3-5.0/5.08-RED	50000000025

ORDER DATA (SPACING 5.0 MM)

Poles	Width (mm)	Article Designation	Article Number	PU
2	10.00	STL955/2-5.0-OR-GREEN	50955025071D	50
3	15.00	STL955/3-5.0-OR-GREEN	50955035071D	50
4	20.00	STL955/4-5.0-OR-GREEN	50955045071D	50

RATINGS

	c UL us		VDE	
Usegroup	B	C	D	
Rated Voltage	300 V	-	300 V	250 V
Rated Current	12 A	-	10 A	9 A
Overvoltage Category				III
Test Voltage	1.6 kV	-	1.6 kV	4.0 kV
Pollution Degree				3

[1]Colours according to RAL, there may be variations on colour due to production conditions. Special colours on request.

Spacing 5.08 mm

STLZ970/..-5.08-V-GREEN

WIRE SIZES	
solid min	-
solid max	-
stranded min	-
stranded max	-
stranded with ferrule min	-
stranded with ferrule max	-
DIMENSIONS	
Stripped Length	-
PCB Hole Diameter	1.4 mm
MATERIALS	
Contact Pin	Copper Alloy
INSULATING MATERIAL	
Material	PBT
Flammability Class	UL 94 V-0
TEMPERATURES	
Operating Temperature (without mech. load)	-40 °C - 105 °C
WAVE SOLDERING PROCESS	
Soldering Temperature, recommended	260 °C
Peak Soldering Time, recommended	3-4 s
REFLOW PROCESS	
Soldering Temperature, recommended	-
Peak Soldering Time, recommended	-



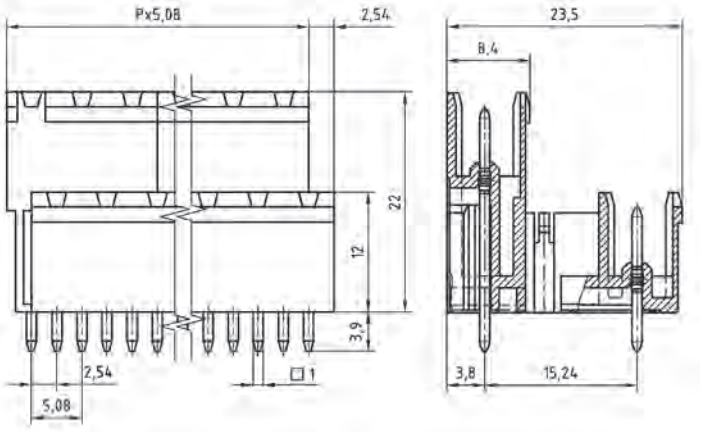

COLOURS[1]

	GREEN, RAL 6018		PEBBLE GREY, RAL 7032
	LIGHT GREEN, similar RAL 6018		

COUNTERPARTS (SPACING 5.08 MM)

Pin Strip / PCB Terminal Block

STLZ950-INV AKZ950 AKZ955 AKZ1100 AKZ1110 AKZ1200 AKZ4951

ORDER DATA (SPACING 5.08 MM)

Poles	Width (mm)	Article Designation	Article Number	PU
2	12.70	STLZ970/2-5.08-V-GREEN	50970025131E	100
3	17.78	STLZ970/3-5.08-V-GREEN	50970035131E	100
4	22.86	STLZ970/4-5.08-V-GREEN	50970045131E	100
5	27.94	STLZ970/5-5.08-V-GREEN	50970055131D	50
6	33.02	STLZ970/6-5.08-V-GREEN	50970065131D	50
7	38.10	STLZ970/7-5.08-V-GREEN	50970075131D	50
8	43.18	STLZ970/8-5.08-V-GREEN	50970085131D	50
9	48.26	STLZ970/9-5.08-V-GREEN	50970095131D	50
10	53.34	STLZ970/10-5.08-V-GREEN	50970105131D	50
11	58.42	STLZ970/11-5.08-V-GREEN	50970115131D	50
12	63.50	STLZ970/12-5.08-V-GREEN	50970125131D	50

ACCESSORIES

	Description	Article Number
	Coding Star CS2-5.0/5.08-RED	50000000024
	Side Wall and/or Spacer SW/SE-STL970-GREEN	50970000000
	Separating Element SE-STL950-GREEN	50950000002

RATINGS

Usegroup	B	C	D	
Rated Voltage	300 V	150 V	300 V	250 V
Rated Current	15 A	15 A	10 A	12 A
Overvoltage Category				III
Test Voltage	1.6 kV	1.3 kV	1.6 kV	4.0 kV
Pollution Degree				3

[1]Colours according to RAL, there may be variations on colour due to production conditions. Special colours on request.

L'IMPULSION
Retrouvez nous sur
www.limpulsion.fr

STLZ970/..-5.08-H-GREEN

Spacing 5.08 mm



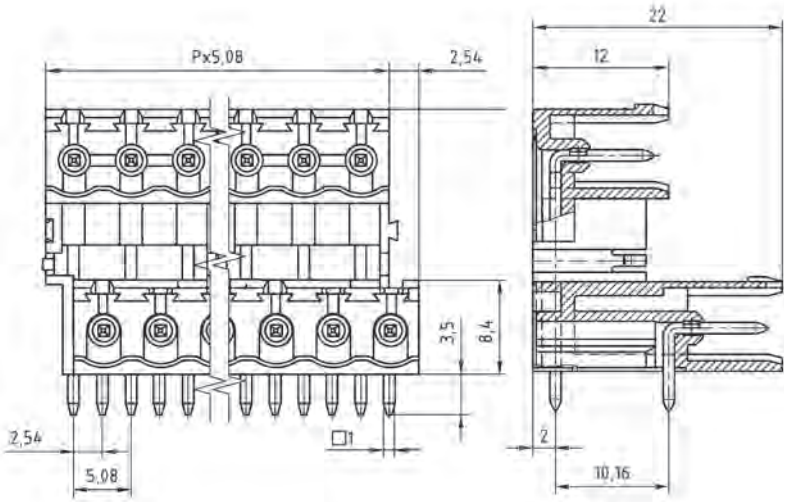

WIRE SIZES	
solid min	-
solid max	-
stranded min	-
stranded max	-
stranded with ferrule min	-
stranded with ferrule max	-
DIMENSIONS	
Stripped Length	-
PCB Hole Diameter	1.4 mm
MATERIALS	
Contact Pin	Copper Alloy
INSULATING MATERIAL	
Material	PBT
Flammability Class	UL 94 V-0
TEMPERATURES	
Operating Temperature (without mech. load)	-40 °C - 105 °C
WAVE SOLDERING PROCESS	
Soldering Temperature, recommended	260 °C
Peak Soldering Time, recommended	3-4 s
REFLOW PROCESS	
Soldering Temperature, recommended	-
Peak Soldering Time, recommended	-

COLOURS[1]

GREEN, RAL 6018	PEBBLE GREY, RAL 7032
LIGHT GREEN, similar RAL 6018	

COUNTERPARTS (SPACING 5.08 MM)

Pin Strip / PCB Terminal Block

STLZ950-INV AKZ950 AKZ955 AKZ1100 AKZ1110 AKZ1200 AKZ4951

ACCESSORIES

	Description	Article Number
	Coding Star CS2-5.0/5.08-RED	50000000024
	Side Wall and/or Spacer SW/SE-STL970-GREEN	50970000000
	Separating Element SE-STL950-GREEN	50950000002

RATINGS

	cULus			VDE
Usegroup	B	C	D	
Rated Voltage	300 V	150 V	300 V	250 V
Rated Current	15 A	15 A	10 A	12 A
Overvoltage Category				III
Test Voltage	1.6 kV	1.3 kV	1.6 kV	4.0 kV
Pollution Degree				3

ORDER DATA (SPACING 5.08 MM)

Poles	Width (mm)	Article Designation	Article Number	PU
2	12.70	STLZ970/2-5.08-H-GREEN	50970025031E	100
3	17.78	STLZ970/3-5.08-H-GREEN	50970035031E	100
4	22.86	STLZ970/4-5.08-H-GREEN	50970045031E	100
5	27.94	STLZ970/5-5.08-H-GREEN	50970055031D	50
6	33.02	STLZ970/6-5.08-H-GREEN	50970065031D	50
7	38.10	STLZ970/7-5.08-H-GREEN	50970075031D	50
8	43.18	STLZ970/8-5.08-H-GREEN	50970085031D	50
9	48.26	STLZ970/9-5.08-H-GREEN	50970095031D	50
10	53.34	STLZ970/10-5.08-H-GREEN	50970105031D	50
11	58.42	STLZ970/11-5.08-H-GREEN	50970115031D	50
12	63.50	STLZ970/12-5.08-H-GREEN	50970125031D	50

[1]Colours according to RAL, there may be variations on colour due to production conditions. Special colours on request.

Spacing 5.08 mm

STLZ970/..G-5.08-V-GREEN

WIRE SIZES	
solid min	-
solid max	-
stranded min	-
stranded max	-
stranded with ferrule min	-
stranded with ferrule max	-
DIMENSIONS	
Stripped Length	-
PCB Hole Diameter	1.4 mm
MATERIALS	
Contact Pin	Copper Alloy
INSULATING MATERIAL	
Material	PBT
Flammability Class	UL 94 V-0
TEMPERATURES	
Operating Temperature (without mech. load)	-40 °C - 105 °C
WAVE SOLDERING PROCESS	
Soldering Temperature, recommended	260 °C
Peak Soldering Time, recommended	3-4 s
REFLOW PROCESS	
Soldering Temperature, recommended	-
Peak Soldering Time, recommended	-



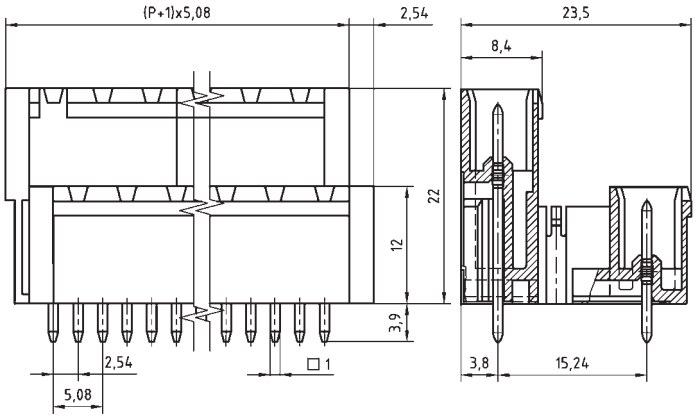

COLOURS[1]	
GREEN, RAL 6018	PEBBLE GREY, RAL 7032
LIGHT GREEN, similar RAL 6018	

COUNTERPARTS (SPACING 5.08 MM)
Pin Strip / PCB Terminal Block
STLZ950-INV AKZ950 AKZ955 AKZ1100 AKZ1110 AKZ1200 AKZ4951

ORDER DATA (SPACING 5.08 MM)

Poles	Width (mm)	Article Designation	Article Number	PU
2	17.78	STLZ970/2G-5.08-V-GREEN	50970025121E	100
3	22.86	STLZ970/3G-5.08-V-GREEN	50970035121E	100
4	27.94	STLZ970/4G-5.08-V-GREEN	50970045121E	100
5	33.02	STLZ970/5G-5.08-V-GREEN	50970055121D	50
6	38.10	STLZ970/6G-5.08-V-GREEN	50970065121D	50
7	43.18	STLZ970/7G-5.08-V-GREEN	50970075121D	50
8	48.26	STLZ970/8G-5.08-V-GREEN	50970085121D	50
9	53.34	STLZ970/9G-5.08-V-GREEN	50970095121D	50
10	58.42	STLZ970/10G-5.08-V-GREEN	50970105121D	50
11	63.50	STLZ970/11G-5.08-V-GREEN	50970115121D	50
12	68.58	STLZ970/12G-5.08-V-GREEN	50970125121D	50

ACCESSORIES

	Description	Article Number
	Coding Star CS2-5.0/5.08-RED	50000000024
	Side Wall and/or Spacer SW/SE-STL970-GREEN	50970000000
	Separating Element SE-STL950-GREEN	50950000002

RATINGS

	c UL us			VDE
Usegroup	B	C	D	
Rated Voltage	300 V	150 V	300 V	250 V
Rated Current	15 A	15 A	10 A	12 A
Overvoltage Category				III
Test Voltage	1.6 kV	1.3 kV	1.6 kV	4.0 kV
Pollution Degree				3

[1]Colours according to RAL, there may be variations on colour due to production conditions. Special colours on request.

L'IMPULSION
Retrouvez nous sur
www.limpulsion.fr

STLZ970/..G-5.08-H-GREEN

Spacing 5.08 mm



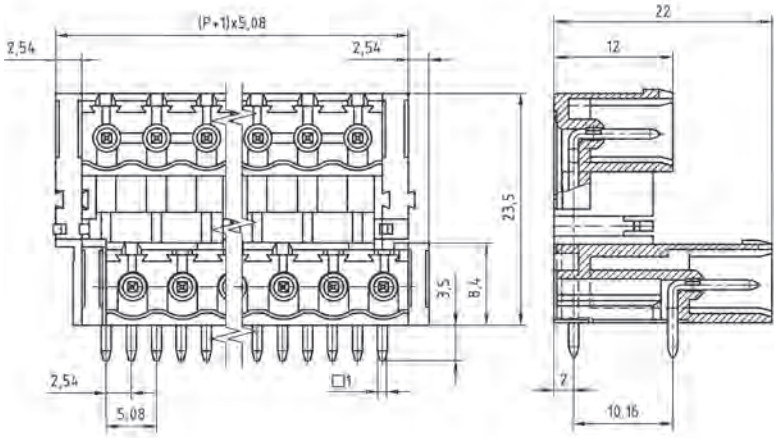

WIRE SIZES	
solid min	-
solid max	-
stranded min	-
stranded max	-
stranded with ferrule min	-
stranded with ferrule max	-
DIMENSIONS	
Stripped Length	-
PCB Hole Diameter	1.4 mm
MATERIALS	
Contact Pin	Copper Alloy
INSULATING MATERIAL	
Material	PBT
Flammability Class	UL 94 V-0
TEMPERATURES	
Operating Temperature (without mech. load)	-40 °C - 105 °C
WAVE SOLDERING PROCESS	
Soldering Temperature, recommended	260 °C
Peak Soldering Time, recommended	3-4 s
REFLOW PROCESS	
Soldering Temperature, recommended	-
Peak Soldering Time, recommended	-

COLOURS[1]

GREEN, RAL 6018	PEBBLE GREY, RAL 7032
LIGHT GREEN, similar RAL 6018	

COUNTERPARTS (SPACING 5.08 MM)

Pin Strip / PCB Terminal Block

STLZ950-INV AKZ950 AKZ955 AKZ1100 AKZ1110 AKZ1200 AKZ4951

ACCESSORIES

	Description	Article Number
	Coding Star CS2-5.0/5.08-RED	50000000024
	Side Wall and/or Spacer SW/SE-STL970-GREEN	50970000000
	Separating Element SE-STL950-GREEN	50950000002

RATINGS

	c UL us			VDE
Usegroup	B	C	D	
Rated Voltage	300 V	150 V	300 V	250 V
Rated Current	15 A	15 A	10 A	12 A
Overvoltage Category				III
Test Voltage	1.6 kV	1.3 kV	1.6 kV	4.0 kV
Pollution Degree				3

ORDER DATA (SPACING 5.08 MM)

Poles	Width (mm)	Article Designation	Article Number	PU
2	17.78	STLZ970/2G-5.08-H-GREEN	50970025021E	100
3	22.86	STLZ970/3G-5.08-H-GREEN	50970035021E	100
4	27.94	STLZ970/4G-5.08-H-GREEN	50970045021E	100
5	33.02	STLZ970/5G-5.08-H-GREEN	50970055021D	50
6	38.10	STLZ970/6G-5.08-H-GREEN	50970065021D	50
7	43.18	STLZ970/7G-5.08-H-GREEN	50970075021D	50
8	48.26	STLZ970/8G-5.08-H-GREEN	50970085021D	50
9	53.34	STLZ970/9G-5.08-H-GREEN	50970095021D	50
10	58.42	STLZ970/10G-5.08-H-GREEN	50970105021D	50
11	63.50	STLZ970/11G-5.08-H-GREEN	50970115021D	50
12	68.58	STLZ970/12G-5.08-H-GREEN	50970125021D	50

[1]Colours according to RAL, there may be variations on colour due to production conditions. Special colours on request.

Spacing 5.08 mm

STLZ970/..F-5.08-V-GREEN

WIRE SIZES	
solid min	-
solid max	-
stranded min	-
stranded max	-
stranded with ferrule min	-
stranded with ferrule max	-
DIMENSIONS	
Stripped Length	-
PCB Hole Diameter	1.4 mm
MATERIALS	
Thread Insert, Flange	Brass
Contact Pin	Copper Alloy
INSULATING MATERIAL	
Material	PBT
Flammability Class	UL 94 V-0
TEMPERATURES	
Operating Temperature (without mech. load)	-40 °C - 105 °C
WAVE SOLDERING PROCESS	
Soldering Temperature, recommended	260 °C
Peak Soldering Time, recommended	3-4 s
REFLOW PROCESS	
Soldering Temperature, recommended	-
Peak Soldering Time, recommended	-



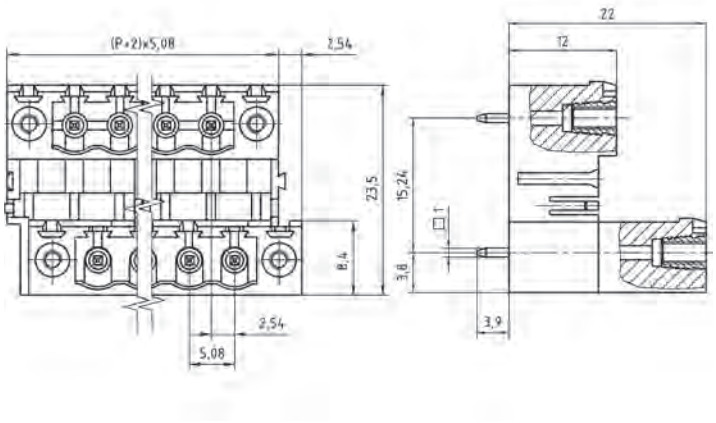

COLOURS[1]
GREEN, RAL 6018

COUNTERPARTS (SPACING 5.08 MM)
PCB Terminal Block
AKZ1200 AKZ950 AKZ1100 AKZ1110

ORDER DATA (SPACING 5.08 MM)

Poles	Width (mm)	Article Designation	Article Number	PU
2	22.86	STLZ970/2F-5.08-V-GREEN	50970026121D	50
3	27.94	STLZ970/3F-5.08-V-GREEN	50970036121D	50
4	33.02	STLZ970/4F-5.08-V-GREEN	50970046121D	50
5	38.10	STLZ970/5F-5.08-V-GREEN	50970056121D	50
6	43.18	STLZ970/6F-5.08-V-GREEN	50970066121D	50
7	48.26	STLZ970/7F-5.08-V-GREEN	50970076121D	50
8	53.34	STLZ970/8F-5.08-V-GREEN	50970086121D	50
9	58.42	STLZ970/9F-5.08-V-GREEN	50970096121D	50
10	63.50	STLZ970/10F-5.08-V-GREEN	50970106121D	50
11	68.58	STLZ970/11F-5.08-V-GREEN	50970116121D	50
12	73.66	STLZ970/12F-5.08-V-GREEN	50970126121D	50

ACCESSORIES

	Description	Article Number
	Coding Star CS2-5.0/5.08-RED	50000000024
	Separating Element SE-STL950-GREEN	50950000002

RATINGS

	c UL us			VDE
Usegroup	B	C	D	
Rated Voltage	300 V	150 V	300 V	250 V
Rated Current	15 A	15 A	10 A	12 A
Overvoltage Category				III
Test Voltage	1.6 kV	1.3 kV	1.6 kV	4.0 kV
Pollution Degree				3

[1]Colours according to RAL, there may be variations on colour due to production conditions. Special colours on request.

L'IMPULSION
Retrouvez nous sur
www.limpulsion.fr

STLZ970/..F-5.08-H-GREEN

Spacing 5.08 mm



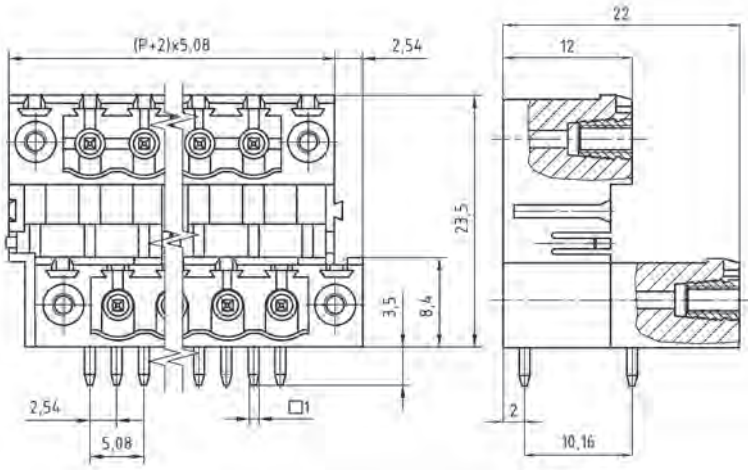

WIRE SIZES	
solid min	-
solid max	-
stranded min	-
stranded max	-
stranded with ferrule min	-
stranded with ferrule max	-
DIMENSIONS	
Stripped Length	-
PCB Hole Diameter	1.4 mm
MATERIALS	
Thread Insert, Flange	Brass
Contact Pin	Copper Alloy
INSULATING MATERIAL	
Material	PBT
Flammability Class	UL 94 V-0
TEMPERATURES	
Operating Temperature (without mech. load)	-40 °C - 105 °C
WAVE SOLDERING PROCESS	
Soldering Temperature, recommended	260 °C
Peak Soldering Time, recommended	3-4 s
REFLOW PROCESS	
Soldering Temperature, recommended	-
Peak Soldering Time, recommended	-

COLOURS[1]

GREEN, RAL 6018 — LIGHT GREEN, similar RAL 6018

COUNTERPARTS (SPACING 5.08 MM)

PCB Terminal Block

AKZ1200 AKZ950 AKZ1100 AKZ1110

ACCESSORIES

	Description	Article Number
	Coding Star CS2-5.0/5.08-RED	50000000024
	Separating Element SE-STL950-GREEN	50950000002

ORDER DATA (SPACING 5.08 MM)

Poles	Width (mm)	Article Designation	Article Number	PU
2	22.86	STLZ970/2F-5.08-H-GREEN	50970026021D	50
3	27.94	STLZ970/3F-5.08-H-GREEN	50970036021D	50
4	33.02	STLZ970/4F-5.08-H-GREEN	50970046021D	50
5	38.10	STLZ970/5F-5.08-H-GREEN	50970056021D	50
6	43.18	STLZ970/6F-5.08-H-GREEN	50970066021D	50
7	48.26	STLZ970/7F-5.08-H-GREEN	50970076021D	50
8	53.34	STLZ970/8F-5.08-H-GREEN	50970086021D	50
9	58.42	STLZ970/9F-5.08-H-GREEN	50970096021D	50
10	63.50	STLZ970/10F-5.08-H-GREEN	50970106021D	50
11	68.58	STLZ970/11F-5.08-H-GREEN	50970116021D	50
12	73.66	STLZ970/12F-5.08-H-GREEN	50970126021D	50

RATINGS	c UL us			VDE
Usegroup	B	C	D	
Rated Voltage	300 V	150 V	300 V	250 V
Rated Current	15 A	15 A	10 A	12 A
Overvoltage Category				III
Test Voltage	1.6 kV	1.3 kV	1.6 kV	4.0 kV
Pollution Degree				3

[1]Colours according to RAL, there may be variations on colour due to production conditions. Special colours on request.

Spacing 5.0 mm

STL975/..G-5.0-V-GREEN

WIRE SIZES	
solid min	-
solid max	-
stranded min	-
stranded max	-
stranded with ferrule min	-
stranded with ferrule max	-
DIMENSIONS	
Stripped Length	-
PCB Hole Diameter	1.4 mm
MATERIALS	
Contact Pin	Copper Alloy
INSULATING MATERIAL	
Material	PA 6.6
Flammability Class	UL 94 V-0
TEMPERATURES	
Operating Temperature (without mech. load)	-40 °C - 105 °C
WAVE SOLDERING PROCESS	
Soldering Temperature, recommended	260 °C
Peak Soldering Time, recommended	3-4 s
REFLOW PROCESS	
Soldering Temperature, recommended	-
Peak Soldering Time, recommended	-



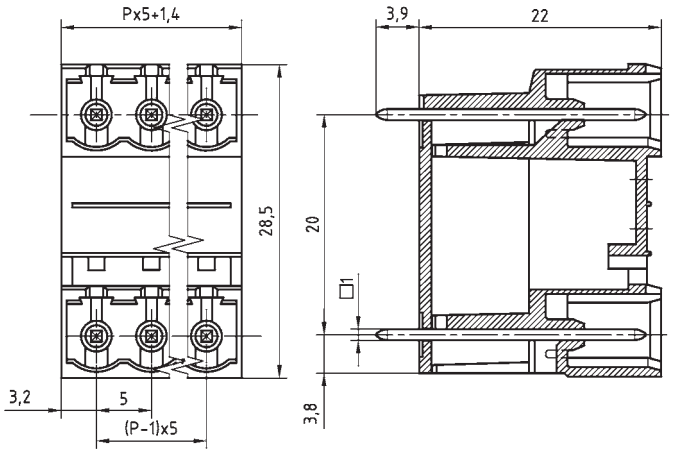

COLOURS[1]

GREEN, RAL 6018 — LIGHT GREEN, similar RAL 6018

COUNTERPARTS (SPACING 5.0 MM)

PCB Terminal Block

AK950 AK955 AK1100 AK1110

ORDER DATA (SPACING 5.0 MM)

Poles	Width (mm)	Article Designation	Article Number	PU
2	11.40	STL975/2G-5.0-V-GREEN	50975025101D	50
3	16.40	STL975/3G-5.0-V-GREEN	50975035101D	50
4	21.40	STL975/4G-5.0-V-GREEN	50975045101D	50
5	26.40	STL975/5G-5.0-V-GREEN	50975055101D	50
6	31.40	STL975/6G-5.0-V-GREEN	50975065101D	50
7	36.40	STL975/7G-5.0-V-GREEN	50975075101D	50
8	41.40	STL975/8G-5.0-V-GREEN	50975085101D	50
9	46.40	STL975/9G-5.0-V-GREEN	50975095101D	50
10	51.40	STL975/10G-5.0-V-GREEN	50975105101D	50
11	56.40	STL975/11G-5.0-V-GREEN	50975115101D	50
12	61.40	STL975/12G-5.0-V-GREEN	50975125101D	50
13	66.40	STL975/13G-5.0-V-GREEN	50975135101D	50
14	71.40	STL975/14G-5.0-V-GREEN	50975145101D	50
15	76.40	STL975/15G-5.0-V-GREEN	50975155101D	50
16	81.40	STL975/16G-5.0-V-GREEN	50975165101D	50
17	86.40	STL975/17G-5.0-V-GREEN	50975175101D	50
18	91.40	STL975/18G-5.0-V-GREEN	50975185101D	50
19	96.40	STL975/19G-5.0-V-GREEN	50975195101D	50
20	101.40	STL975/20G-5.0-V-GREEN	50975205101D	50
21	106.40	STL975/21G-5.0-V-GREEN	50975215101D	50
22	111.40	STL975/22G-5.0-V-GREEN	50975225101D	50
23	116.40	STL975/23G-5.0-V-GREEN	50975235101D	50
24	121.40	STL975/24G-5.0-V-GREEN	50975245101D	50

ACCESSORIES

	Description	Article Number
	Coding Star CS2-5.0/5.08-RED	50000000024
	Separating Element SE-STL950-GREEN	50950000002

RATINGS

	c UL us			VDE
Usegroup	B	C	D	
Rated Voltage	300 V	150 V	300 V	250 V
Rated Current	15 A	15 A	10 A	12 A
Overvoltage Category				III
Test Voltage	1.6 kV	1.3 kV	1.6 kV	4.0 kV
Pollution Degree				3

[1]Colours according to RAL, there may be variations on colour due to production conditions. Special colours on request.

L'IMPULSION
Retrouvez nous sur
www.limpulsion.fr

STL975/..G-5.0-H-GREEN

Spacing 5.0 mm



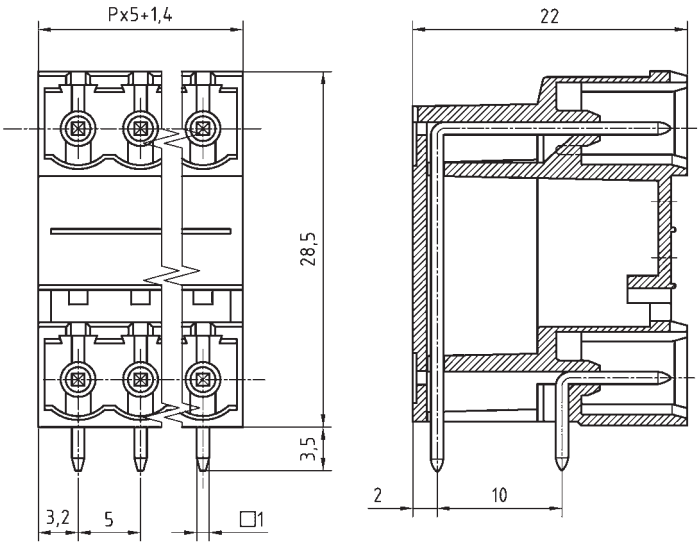

WIRE SIZES	
solid min	-
solid max	-
stranded min	-
stranded max	-
stranded with ferrule min	-
stranded with ferrule max	-
DIMENSIONS	
Stripped Length	-
PCB Hole Diameter	1.4 mm
MATERIALS	
Contact Pin	Copper Alloy
INSULATING MATERIAL	
Material	PA 6.6
Flammability Class	UL 94 V-0
TEMPERATURES	
Operating Temperature (without mech. load)	-40 °C - 105 °C
WAVE SOLDERING PROCESS	
Soldering Temperature, recommended	260 °C
Peak Soldering Time, recommended	3-4 s
REFLOW PROCESS	
Soldering Temperature, recommended	-
Peak Soldering Time, recommended	-

COLOURS[1]

GREEN, RAL 6018

LIGHT GREEN, similar RAL 6018

COUNTERPARTS (SPACING 5.0 MM)

PCB Terminal Block

AK950 AK955 AK1100 AK1110

ACCESSORIES

	Description	Article Number
	Coding Star CS2-5.0/5.08-RED	50000000024
	Separating Element SE-STL950-GREEN	50950000002

RATINGS

	c UL us			VDE
Usegroup	B	C	D	
Rated Voltage	300 V	150 V	300 V	250 V
Rated Current	15 A	15 A	10 A	12 A
Overvoltage Category				III
Test Voltage	1.6 kV	1.3 kV	1.6 kV	4.0 kV
Pollution Degree				3

ORDER DATA (SPACING 5.0 MM)

Poles	Width (mm)	Article Designation	Article Number	PU
2	11.40	STL975/2G-5.0-H-GREEN	50975025001D	50
3	16.40	STL975/3G-5.0-H-GREEN	50975035001D	50
4	21.40	STL975/4G-5.0-H-GREEN	50975045001D	50
5	26.40	STL975/5G-5.0-H-GREEN	50975055001D	50
6	31.40	STL975/6G-5.0-H-GREEN	50975065001D	50
7	36.40	STL975/7G-5.0-H-GREEN	50975075001D	50
8	41.40	STL975/8G-5.0-H-GREEN	50975085001D	50
9	46.40	STL975/9G-5.0-H-GREEN	50975095001D	50
10	51.40	STL975/10G-5.0-H-GREEN	50975105001D	50
11	56.40	STL975/11G-5.0-H-GREEN	50975115001D	50
12	61.40	STL975/12G-5.0-H-GREEN	50975125001D	50
13	66.40	STL975/13G-5.0-H-GREEN	50975135001D	50
14	71.40	STL975/14G-5.0-H-GREEN	50975145001D	50
15	76.40	STL975/15G-5.0-H-GREEN	50975155001D	50
16	81.40	STL975/16G-5.0-H-GREEN	50975165001D	50
17	86.40	STL975/17G-5.0-H-GREEN	50975175001D	50
18	91.40	STL975/18G-5.0-H-GREEN	50975185001D	50
19	96.40	STL975/19G-5.0-H-GREEN	50975195001D	50
20	101.40	STL975/20G-5.0-H-GREEN	50975205001D	50
21	106.40	STL975/21G-5.0-H-GREEN	50975215001D	50
22	111.40	STL975/22G-5.0-H-GREEN	50975225001D	50
23	116.40	STL975/23G-5.0-H-GREEN	50975235001D	50
24	121.40	STL975/24G-5.0-H-GREEN	50975245001D	50

[1]Colours according to RAL, there may be variations on colour due to production conditions. Special colours on request.

Spacing 5.08 mm

STLZ990/..-5.08-GREEN

WIRE SIZES	
solid min	-
solid max	-
stranded min	-
stranded max	-
stranded with ferrule min	-
stranded with ferrule max	-
DIMENSIONS	
Stripped Length	-
PCB Hole Diameter	1.4 mm
MATERIALS	
Contact Pin	Copper Alloy
INSULATING MATERIAL	
Material	PA 6.6
Flammability Class	UL 94 V-0
TEMPERATURES	
Operating Temperature (without mech. load)	-40 °C - 105 °C
WAVE SOLDERING PROCESS	
Soldering Temperature, recommended	260 °C
Peak Soldering Time, recommended	3-4 s
REFLOW PROCESS	
Soldering Temperature, recommended	-
Peak Soldering Time, recommended	-



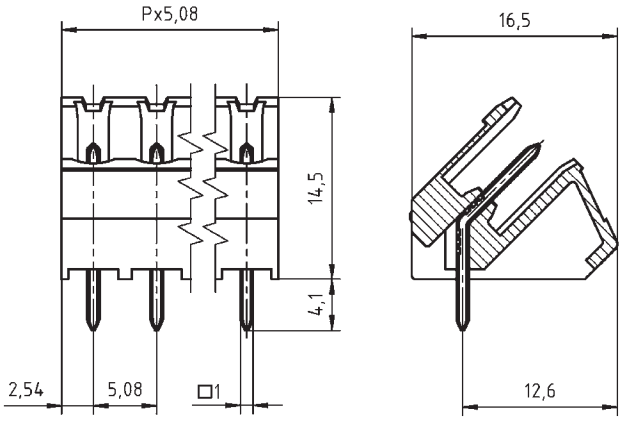

COLOURS[1]

GREEN, RAL 6018

LIGHT GREEN, similar RAL 6018

COUNTERPARTS (SPACING 5.08 MM)

Pin Strip / PCB Terminal Block

STLZ950-INV AKZ950 AKZ955 AKZ1100 AKZ1110 AKZ1200 AKZ4951

ORDER DATA (SPACING 5.08 MM)

Poles	Width (mm)	Article Designation	Article Number	PU
2	10.16	STLZ990/2-5.08-GREEN	50990025131F	200
3	15.24	STLZ990/3-5.08-GREEN	50990035131F	200
4	20.32	STLZ990/4-5.08-GREEN	50990045131F	200
5	25.40	STLZ990/5-5.08-GREEN	50990055131E	100
6	30.48	STLZ990/6-5.08-GREEN	50990065131E	100
7	35.56	STLZ990/7-5.08-GREEN	50990075131E	100
8	40.64	STLZ990/8-5.08-GREEN	50990085131D	50
9	45.72	STLZ990/9-5.08-GREEN	50990095131D	50
10	50.80	STLZ990/10-5.08-GREEN	50990105131D	50
11	55.88	STLZ990/11-5.08-GREEN	50990115131D	50
12	60.96	STLZ990/12-5.08-GREEN	50990125131D	50
13	66.04	STLZ990/13-5.08-GREEN	50990135131D	50
14	71.12	STLZ990/14-5.08-GREEN	50990145131D	50
15	76.20	STLZ990/15-5.08-GREEN	50990155131D	50
16	81.28	STLZ990/16-5.08-GREEN	50990165131D	50
17	86.36	STLZ990/17-5.08-GREEN	50990175131D	50
18	91.44	STLZ990/18-5.08-GREEN	50990185131D	50
19	96.52	STLZ990/19-5.08-GREEN	50990195131D	50
20	101.60	STLZ990/20-5.08-GREEN	50990205131D	50
21	106.68	STLZ990/21-5.08-GREEN	50990215131D	50
22	111.76	STLZ990/22-5.08-GREEN	50990225131D	50
23	116.84	STLZ990/23-5.08-GREEN	50990235131D	50
24	121.92	STLZ990/24-5.08-GREEN	50990245131D	50

ACCESSORIES

	Description	Article Number
	Coding Star CS2-5.0/5.08-RED	50000000024
	Separating Element SE-STL950-GREEN	50950000002

RATINGS

	cULus			VDE
Usegroup	B	C	D	
Rated Voltage	300 V	150 V	300 V	250 V
Rated Current	15 A	15 A	10 A	12 A
Overvoltage Category				III
Test Voltage	1.6 kV	1.3 kV	1.6 kV	4.0 kV
Pollution Degree				3

[1]Colours according to RAL, there may be variations on colour due to production conditions. Special colours on request.

L'IMPULSION Retrouvez nous sur www.limpulsion.fr

STLZ990/..G-5.08-GREEN

Spacing 5.08 mm



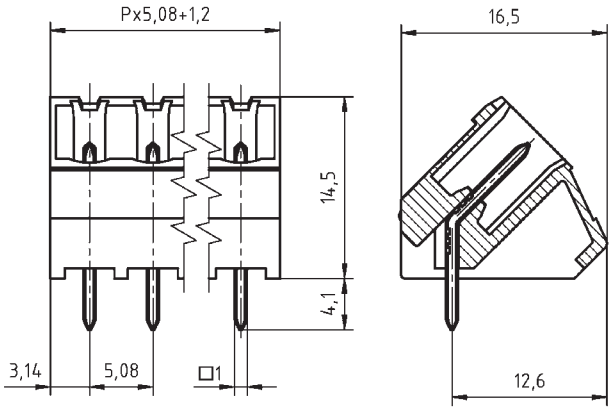

WIRE SIZES	
solid min	-
solid max	-
stranded min	-
stranded max	-
stranded with ferrule min	-
stranded with ferrule max	-
DIMENSIONS	
Stripped Length	-
PCB Hole Diameter	1.4 mm
MATERIALS	
Contact Pin	Copper Alloy
INSULATING MATERIAL	
Material	PA 6.6
Flammability Class	UL 94 V-0
TEMPERATURES	
Operating Temperature (without mech. load)	-40 °C - 105 °C
WAVE SOLDERING PROCESS	
Soldering Temperature, recommended	260 °C
Peak Soldering Time, recommended	3-4 s
REFLOW PROCESS	
Soldering Temperature, recommended	-
Peak Soldering Time, recommended	-

COLOURS[1]

GREEN, RAL 6018

LIGHT GREEN, similar RAL 6018

COUNTERPARTS (SPACING 5.08 MM)

Pin Strip / PCB Terminal Block

STLZ950-INV AKZ950 AKZ955 AKZ1100 AKZ1110 AKZ1200 AKZ4951

ACCESSORIES

	Description	Article Number
	Coding Star CS2-5.0/5.08-RED	50000000024
	Separating Element SE-STL950-GREEN	50950000002

RATINGS

	cULus			VDE
Usegroup	B	C	D	
Rated Voltage	300 V	150 V	300 V	250 V
Rated Current	15 A	15 A	10 A	12 A
Overvoltage Category				III
Test Voltage	1.6 kV	1.3 kV	1.6 kV	4.0 kV
Pollution Degree				3

ORDER DATA (SPACING 5.08 MM)

Poles	Width (mm)	Article Designation	Article Number	PU
2	11.36	STLZ990/2G-5.08-GREEN	50990025121F	200
3	16.44	STLZ990/3G-5.08-GREEN	50990035121F	200
4	21.52	STLZ990/4G-5.08-GREEN	50990045121F	200
5	26.60	STLZ990/5G-5.08-GREEN	50990055121E	100
6	31.68	STLZ990/6G-5.08-GREEN	50990065121E	100
7	36.76	STLZ990/7G-5.08-GREEN	50990075121E	100
8	41.84	STLZ990/8G-5.08-GREEN	50990085121D	50
9	46.92	STLZ990/9G-5.08-GREEN	50990095121D	50
10	52.00	STLZ990/10G-5.08-GREEN	50990105121D	50
11	57.08	STLZ990/11G-5.08-GREEN	50990115121D	50
12	62.16	STLZ990/12G-5.08-GREEN	50990125121D	50
13	67.24	STLZ990/13G-5.08-GREEN	50990135121D	50
14	72.32	STLZ990/14G-5.08-GREEN	50990145121D	50
15	77.40	STLZ990/15G-5.08-GREEN	50990155121D	50
16	82.48	STLZ990/16G-5.08-GREEN	50990165121D	50
17	87.56	STLZ990/17G-5.08-GREEN	50990175121D	50
18	92.64	STLZ990/18G-5.08-GREEN	50990185121D	50
19	97.72	STLZ990/19G-5.08-GREEN	50990195121D	50
20	102.80	STLZ990/20G-5.08-GREEN	50990205121D	50
21	107.88	STLZ990/21G-5.08-GREEN	50990215121D	50
22	112.96	STLZ990/22G-5.08-GREEN	50990225121D	50
23	118.04	STLZ990/23G-5.08-GREEN	50990235121D	50
24	123.12	STLZ990/24G-5.08-GREEN	50990245121D	50

[1]Colours according to RAL, there may be variations on colour due to production conditions. Special colours on request.

Spacing 7.62 mm

STLZ960/..-7.62-V-GREEN

WIRE SIZES	
solid min	-
solid max	-
stranded min	-
stranded max	-
stranded with ferrule min	-
stranded with ferrule max	-
DIMENSIONS	
Stripped Length	-
PCB Hole Diameter	1.4 mm
MATERIALS	
Contact Pin	Copper Alloy
INSULATING MATERIAL	
Material	PA 6.6
Flammability Class	UL 94 V-0
TEMPERATURES	
Operating Temperature (without mech. load)	-40 °C - 105 °C
WAVE SOLDERING PROCESS	
Soldering Temperature, recommended	260 °C
Peak Soldering Time, recommended	3-4 s
REFLOW PROCESS	
Soldering Temperature, recommended	-
Peak Soldering Time, recommended	-



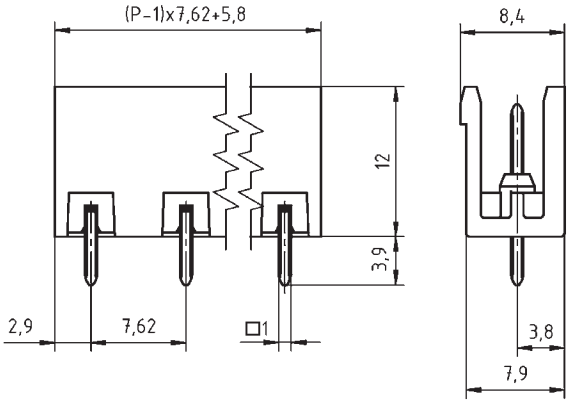

COLOURS[1]

- GREEN, RAL 6018
- LIGHT GREEN, similar RAL 6018
- BASALT GREY, RAL 7012

COUNTERPARTS (SPACING 7.62 MM)

PCB Terminal Block
AKZ960

ORDER DATA (SPACING 7.62 MM)

Poles	Width (mm)	Article Designation	Article Number	PU
2	13.42	STLZ960/2-7.62-V-GREEN	50960025131E	100
3	21.04	STLZ960/3-7.62-V-GREEN	50960035131E	100
4	28.66	STLZ960/4-7.62-V-GREEN	50960045131E	100
5	36.28	STLZ960/5-7.62-V-GREEN	50960055131E	100
6	43.90	STLZ960/6-7.62-V-GREEN	50960065131D	50
7	51.52	STLZ960/7-7.62-V-GREEN	50960075131D	50
8	59.14	STLZ960/8-7.62-V-GREEN	50960085131D	50
9	66.76	STLZ960/9-7.62-V-GREEN	50960095131D	50
10	74.38	STLZ960/10-7.62-V-GREEN	50960105131D	50
11	82.00	STLZ960/11-7.62-V-GREEN	50960115131D	50
12	89.62	STLZ960/12-7.62-V-GREEN	50960125131D	50
13	97.24	STLZ960/13-7.62-V-GREEN	50960135131D	50
14	104.86	STLZ960/14-7.62-V-GREEN	50960145131D	50
15	112.48	STLZ960/15-7.62-V-GREEN	50960155131D	50
16	120.10	STLZ960/16-7.62-V-GREEN	50960165131D	50

ACCESSORIES

	Description	Article Number
	Coding Star CS2-5.0/5.08-RED	50000000024
	Separating Element SE-STL950-GREEN	50950000002

RATINGS

	c UL us			VDE
Usegroup	B	C	D	
Rated Voltage	300 V	150 V	300 V	400 V
Rated Current	15 A	15 A	10 A	12 A
Overvoltage Category				III
Test Voltage	1.6 kV	1.3 kV	1.6 kV	4.0 kV
Pollution Degree				3

[1]Colours according to RAL, there may be variations on colour due to production conditions. Special colours on request.

L'IMPULSION
Retrouvez nous sur
www.limpulsion.fr

NEW

STLZ960/..-7.62-V-GREEN-HC

Spacing 7.62 mm

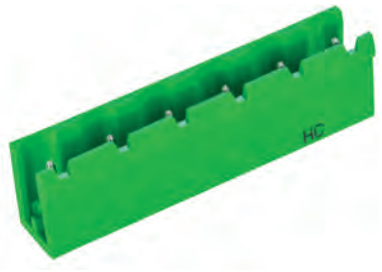

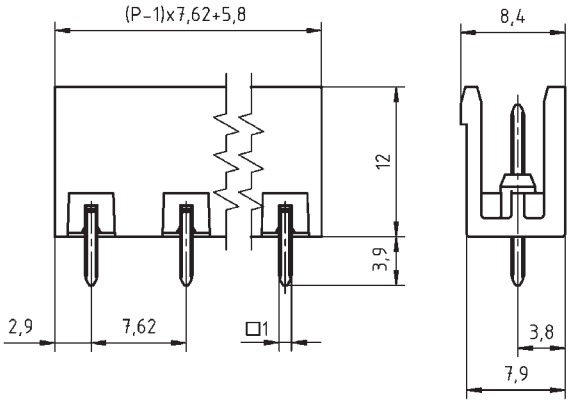

WIRE SIZES	
solid min	-
solid max	-
stranded min	-
stranded max	-
stranded with ferrule min	-
stranded with ferrule max	-
DIMENSIONS	
Stripped Length	-
PCB Hole Diameter	1.4 mm
MATERIALS	
Contact Pin	Copper Alloy
INSULATING MATERIAL	
Material	PA 6.6
Flammability Class	UL 94 V-0
TEMPERATURES	
Operating Temperature (without mech. load)	-40 °C - 105 °C
WAVE SOLDERING PROCESS	
Soldering Temperature, recommended	260 °C
Peak Soldering Time, recommended	3-4 s
REFLOW PROCESS	
Soldering Temperature, recommended	-
Peak Soldering Time, recommended	-

COLOURS[1]

GREEN, RAL 6018

LIGHT GREEN, similar RAL 6018

COUNTERPARTS (SPACING 7.62 MM)

PCB Terminal Block

AKZ960

ACCESSORIES

	Description	Article Number
	Coding Star CS2-5.0/5.08-RED	50000000024
	Separating Element SE-STL950-GREEN	50950000002

ORDER DATA (SPACING 7.62 MM)

Poles	Width (mm)	Article Designation	Article Number	PU
2	13.42	STLZ960/2-7.62-V-GREEN-HC	50960025139E	100
3	21.04	STLZ960/3-7.62-V-GREEN-HC	50960035139E	100
4	28.66	STLZ960/4-7.62-V-GREEN-HC	50960045139E	100
5	36.28	STLZ960/5-7.62-V-GREEN-HC	50960055139E	100
6	43.90	STLZ960/6-7.62-V-GREEN-HC	50960065139D	50
7	51.52	STLZ960/7-7.62-V-GREEN-HC	50960075139D	50
8	59.14	STLZ960/8-7.62-V-GREEN-HC	50960085139D	50
9	66.76	STLZ960/9-7.62-V-GREEN-HC	50960095139D	50
10	74.38	STLZ960/10-7.62-V-GREEN-HC	50960105139D	50
11	82.00	STLZ960/11-7.62-V-GREEN-HC	50960115139D	50
12	89.62	STLZ960/12-7.62-V-GREEN-HC	50960125139D	50
13	97.24	STLZ960/13-7.62-V-GREEN-HC	50960135139D	50
14	104.86	STLZ960/14-7.62-V-GREEN-HC	50960145139D	50
15	112.48	STLZ960/15-7.62-V-GREEN-HC	50960155139D	50
16	120.10	STLZ960/16-7.62-V-GREEN-HC	50960165139D	50

RATINGS

Usegroup	B	C	D	
Rated Voltage	300 V	150 V	300 V	400 V
Rated Current	16 A	16 A	10 A	16 A
Overvoltage Category				III
Test Voltage	1.6 kV	1.3 kV	1.6 kV	4.0 kV
Pollution Degree				3

[1]Colours according to RAL, there may be variations on colour due to production conditions. Special colours on request.

Spacing 7.62 mm

STLZ960/..G-7.62-V-GREEN

WIRE SIZES	
solid min	-
solid max	-
stranded min	-
stranded max	-
stranded with ferrule min	-
stranded with ferrule max	-
DIMENSIONS	
Stripped Length	-
PCB Hole Diameter	1.4 mm
MATERIALS	
Contact Pin	Copper Alloy
INSULATING MATERIAL	
Material	PA 6.6
Flammability Class	UL 94 V-0
TEMPERATURES	
Operating Temperature (without mech. load)	-40 °C - 105 °C
WAVE SOLDERING PROCESS	
Soldering Temperature, recommended	260 °C
Peak Soldering Time, recommended	3-4 s
REFLOW PROCESS	
Soldering Temperature, recommended	-
Peak Soldering Time, recommended	-



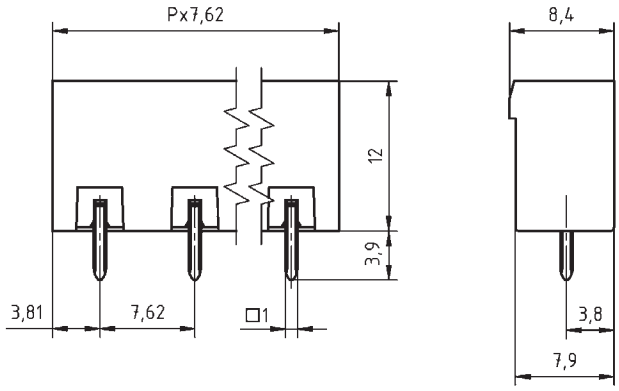

COLOURS[1]

- GREEN, RAL 6018
- LIGHT GREEN, similar RAL 6018
- BASALT GREY, RAL 7012

COUNTERPARTS (SPACING 7.62 MM)

PCB Terminal Block
AKZ960

ORDER DATA (SPACING 7.62 MM)

Poles	Width (mm)	Article Designation	Article Number	PU
2	15.24	STLZ960/2G-7.62-V-GREEN	50960025121E	100
3	22.86	STLZ960/3G-7.62-V-GREEN	50960035121E	100
4	30.48	STLZ960/4G-7.62-V-GREEN	50960045121E	100
5	38.10	STLZ960/5G-7.62-V-GREEN	50960055121E	100
6	45.72	STLZ960/6G-7.62-V-GREEN	50960065121D	50
7	53.34	STLZ960/7G-7.62-V-GREEN	50960075121D	50
8	60.96	STLZ960/8G-7.62-V-GREEN	50960085121D	50
9	68.58	STLZ960/9G-7.62-V-GREEN	50960095121D	50
10	76.20	STLZ960/10G-7.62-V-GREEN	50960105121D	50
11	83.82	STLZ960/11G-7.62-V-GREEN	50960115121D	50
12	91.44	STLZ960/12G-7.62-V-GREEN	50960125121D	50
13	99.06	STLZ960/13G-7.62-V-GREEN	50960135121D	50
14	106.68	STLZ960/14G-7.62-V-GREEN	50960145121D	50
15	114.30	STLZ960/15G-7.62-V-GREEN	50960155121D	50
16	121.92	STLZ960/16G-7.62-V-GREEN	50960165121D	50

ACCESSORIES

	Description	Article Number
	Coding Star CS2-5.0/5.08-RED	50000000024
	Separating Element SE-STL950-GREEN	50950000002

RATINGS

	c UL us			VDE
Usegroup	B	C	D	
Rated Voltage	300 V	150 V	300 V	400 V
Rated Current	15 A	15 A	10 A	12 A
Overvoltage Category				III
Test Voltage	1.6 kV	1.3 kV	1.6 kV	4.0 kV
Pollution Degree				3

[1]Colours according to RAL, there may be variations on colour due to production conditions. Special colours on request.

L'IMPULSION
Retrouvez nous sur
www.limpulsion.fr

NEW

STLZ960/..G-7.62-V-GREEN-HC

Spacing 7.62 mm

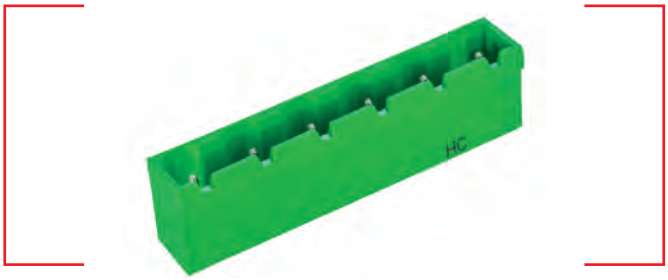

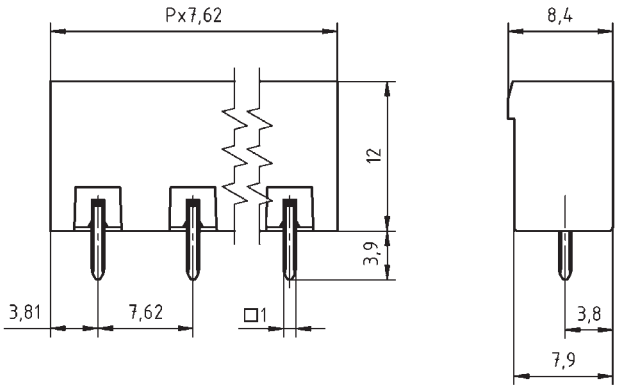

WIRE SIZES	
solid min	-
solid max	-
stranded min	-
stranded max	-
stranded with ferrule min	-
stranded with ferrule max	-
DIMENSIONS	
Stripped Length	-
PCB Hole Diameter	1.4 mm
MATERIALS	
Contact Pin	Copper Alloy
INSULATING MATERIAL	
Material	PA 6.6
Flammability Class	UL 94 V-0
TEMPERATURES	
Operating Temperature (without mech. load)	-40 °C - 105 °C
WAVE SOLDERING PROCESS	
Soldering Temperature, recommended	260 °C
Peak Soldering Time, recommended	3-4 s
REFLOW PROCESS	
Soldering Temperature, recommended	-
Peak Soldering Time, recommended	-

COLOURS[1]

GREEN, RAL 6018

LIGHT GREEN, similar RAL 6018

COUNTERPARTS (SPACING 7.62 MM)

PCB Terminal Block

AKZ960

ACCESSORIES

	Description	Article Number
	Coding Star CS2-5.0/5.08-RED	50000000024
	Separating Element SE-STL950-GREEN	50950000002

ORDER DATA (SPACING 7.62 MM)

Poles	Width (mm)	Article Designation	Article Number	PU
2	15.24	STLZ960/2G-7.62-V-GREEN-HC	50960025129E	100
3	22.86	STLZ960/3G-7.62-V-GREEN-HC	50960035129E	100
4	30.48	STLZ960/4G-7.62-V-GREEN-HC	50960045129E	100
5	38.10	STLZ960/5G-7.62-V-GREEN-HC	50960055129E	100
6	45.72	STLZ960/6G-7.62-V-GREEN-HC	50960065129D	50
7	53.34	STLZ960/7G-7.62-V-GREEN-HC	50960075129D	50
8	60.96	STLZ960/8G-7.62-V-GREEN-HC	50960085129D	50
9	68.58	STLZ960/9G-7.62-V-GREEN-HC	50960095129D	50
10	76.20	STLZ960/10G-7.62-V-GREEN-HC	50960105129D	50
11	83.82	STLZ960/11G-7.62-V-GREEN-HC	50960115129D	50
12	91.44	STLZ960/12G-7.62-V-GREEN-HC	50960125129D	50
13	99.06	STLZ960/13G-7.62-V-GREEN-HC	50960135129D	50
14	106.68	STLZ960/14G-7.62-V-GREEN-HC	50960145129D	50
15	114.30	STLZ960/15G-7.62-V-GREEN-HC	50960155129D	50
16	121.92	STLZ960/16G-7.62-V-GREEN-HC	50960165129D	50

RATINGS

Usegroup	B	C	D	
Rated Voltage	300 V	150 V	300 V	400 V
Rated Current	16 A	16 A	10 A	16 A
Overvoltage Category				III
Test Voltage	1.6 kV	1.3 kV	1.6 kV	4.0 kV
Pollution Degree				3

[1]Colours according to RAL, there may be variations on colour due to production conditions. Special colours on request.

Spacing 7.62 mm

STLZ960/..-7.62-H-GREEN

WIRE SIZES	
solid min	-
solid max	-
stranded min	-
stranded max	-
stranded with ferrule min	-
stranded with ferrule max	-
DIMENSIONS	
Stripped Length	-
PCB Hole Diameter	1.4 mm
MATERIALS	
Contact Pin	Copper Alloy
INSULATING MATERIAL	
Material	PA 6.6
Flammability Class	UL 94 V-0
TEMPERATURES	
Operating Temperature (without mech. load)	-40 °C - 105 °C
WAVE SOLDERING PROCESS	
Soldering Temperature, recommended	260 °C
Peak Soldering Time, recommended	3-4 s
REFLOW PROCESS	
Soldering Temperature, recommended	-
Peak Soldering Time, recommended	-

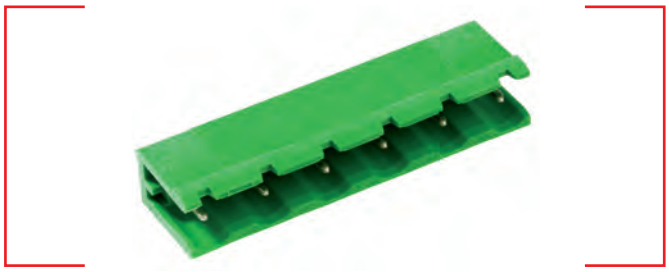

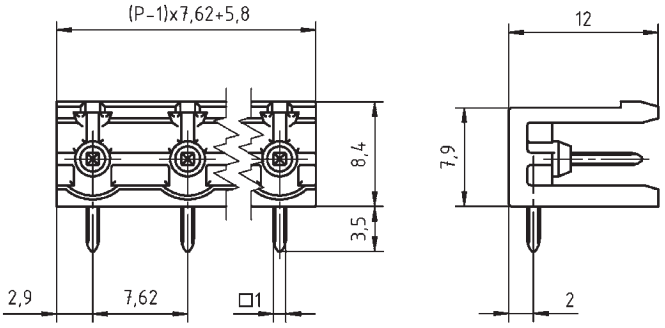

COLOURS[1]

	GREEN, RAL 6018		LIGHT GREEN, similar RAL 6018
	BASALT GREY, RAL 7012		

COUNTERPARTS (SPACING 7.62 MM)

PCB Terminal Block
AKZ960

ORDER DATA (SPACING 7.62 MM)

Poles	Width (mm)	Article Designation	Article Number	PU
2	13.42	STLZ960/2-7.62-H-GREEN	50960025031E	100
3	21.04	STLZ960/3-7.62-H-GREEN	50960035031E	100
4	28.66	STLZ960/4-7.62-H-GREEN	50960045031E	100
5	36.28	STLZ960/5-7.62-H-GREEN	50960055031E	100
6	43.90	STLZ960/6-7.62-H-GREEN	50960065031D	50
7	51.52	STLZ960/7-7.62-H-GREEN	50960075031D	50
8	59.14	STLZ960/8-7.62-H-GREEN	50960085031D	50
9	66.76	STLZ960/9-7.62-H-GREEN	50960095031D	50
10	74.38	STLZ960/10-7.62-H-GREEN	50960105031D	50
11	82.00	STLZ960/11-7.62-H-GREEN	50960115031D	50
12	89.62	STLZ960/12-7.62-H-GREEN	50960125031D	50
13	97.24	STLZ960/13-7.62-H-GREEN	50960135031D	50
14	104.86	STLZ960/14-7.62-H-GREEN	50960145031D	50
15	112.48	STLZ960/15-7.62-H-GREEN	50960155031D	50
16	120.10	STLZ960/16-7.62-H-GREEN	50960165031D	50

ACCESSORIES

	Description	Article Number
	Coding Star CS2-5.0/5.08-RED	50000000024
	Separating Element SE-STL950-GREEN	50950000002

RATINGS

	cULus			VDE
Usegroup	B	C	D	
Rated Voltage	300 V	150 V	300 V	400 V
Rated Current	15 A	15 A	10 A	12 A
Overvoltage Category				III
Test Voltage	1.6 kV	1.3 kV	1.6 kV	4.0 kV
Pollution Degree				3

[1]Colours according to RAL, there may be variations on colour due to production conditions. Special colours on request.

L'IMPULSION
Retrouvez nous sur
www.limpulsion.fr

NEW

STLZ960/..-7.62-H-GREEN-HC

Spacing 7.62 mm



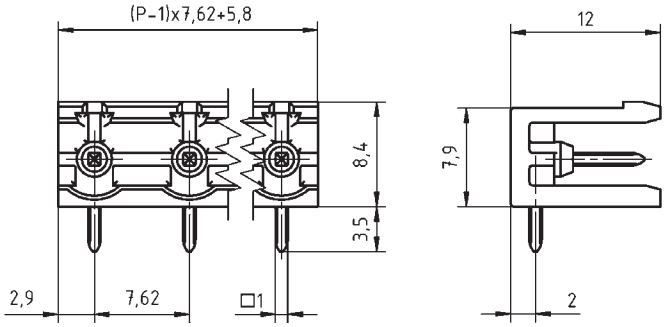

WIRE SIZES	
solid min	-
solid max	-
stranded min	-
stranded max	-
stranded with ferrule min	-
stranded with ferrule max	-
DIMENSIONS	
Stripped Length	-
PCB Hole Diameter	1.4 mm
MATERIALS	
Contact Pin	Copper Alloy
INSULATING MATERIAL	
Material	PA 6.6
Flammability Class	UL 94 V-0
TEMPERATURES	
Operating Temperature (without mech. load)	-40 °C - 105 °C
WAVE SOLDERING PROCESS	
Soldering Temperature, recommended	260 °C
Peak Soldering Time, recommended	3-4 s
REFLOW PROCESS	
Soldering Temperature, recommended	-
Peak Soldering Time, recommended	-

COLOURS[1]

GREEN, RAL 6018

LIGHT GREEN, similar RAL 6018

COUNTERPARTS (SPACING 7.62 MM)

PCB Terminal Block

AKZ960

ACCESSORIES

	Description	Article Number
	Coding Star CS2-5.0/5.08-RED	50000000024
	Separating Element SE-STL950-GREEN	50950000002

RATINGS

	cULus		VDE	
Usegroup	B	C	D	
Rated Voltage	300 V	150 V	300 V	400 V
Rated Current	16 A	16 A	10 A	16 A
Overvoltage Category				III
Test Voltage	1.6 kV	1.3 kV	1.6 kV	4.0 kV
Pollution Degree				3

ORDER DATA (SPACING 7.62 MM)

Poles	Width (mm)	Article Designation	Article Number	PU
2	13.42	STLZ960/2-7.62-H-GREEN-HC	50960025039E	100
3	21.04	STLZ960/3-7.62-H-GREEN-HC	50960035039E	100
4	28.66	STLZ960/4-7.62-H-GREEN-HC	50960045039E	100
5	36.28	STLZ960/5-7.62-H-GREEN-HC	50960055039E	100
6	43.90	STLZ960/6-7.62-H-GREEN-HC	50960065039D	50
7	51.52	STLZ960/7-7.62-H-GREEN-HC	50960075039D	50
8	59.14	STLZ960/8-7.62-H-GREEN-HC	50960085039D	50
9	66.76	STLZ960/9-7.62-H-GREEN-HC	50960095039D	50
10	74.38	STLZ960/10-7.62-H-GREEN-HC	50960105039D	50
11	82.00	STLZ960/11-7.62-H-GREEN-HC	50960115039D	50
12	89.62	STLZ960/12-7.62-H-GREEN-HC	50960125039D	50
13	97.24	STLZ960/13-7.62-H-GREEN-HC	50960135039D	50
14	104.86	STLZ960/14-7.62-H-GREEN-HC	50960145039D	50
15	112.48	STLZ960/15-7.62-H-GREEN-HC	50960155039D	50
16	120.10	STLZ960/16-7.62-H-GREEN-HC	50960165039D	50

[1]Colours according to RAL, there may be variations on colour due to production conditions. Special colours on request.

Spacing 7.62 mm

STLZ960/..G-7.62-H-GREEN

WIRE SIZES	
solid min	-
solid max	-
stranded min	-
stranded max	-
stranded with ferrule min	-
stranded with ferrule max	-
DIMENSIONS	
Stripped Length	-
PCB Hole Diameter	1.4 mm
MATERIALS	
Contact Pin	Copper Alloy
INSULATING MATERIAL	
Material	PA 6.6
Flammability Class	UL 94 V-0
TEMPERATURES	
Operating Temperature (without mech. load)	-40 °C - 105 °C
WAVE SOLDERING PROCESS	
Soldering Temperature, recommended	260 °C
Peak Soldering Time, recommended	3-4 s
REFLOW PROCESS	
Soldering Temperature, recommended	-
Peak Soldering Time, recommended	-

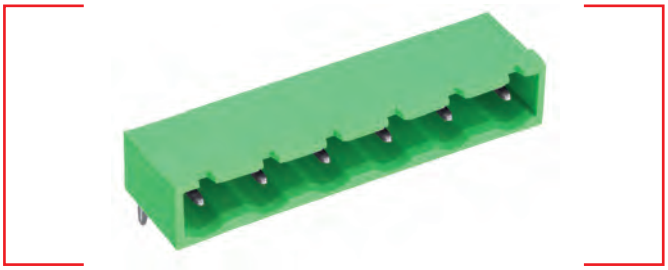

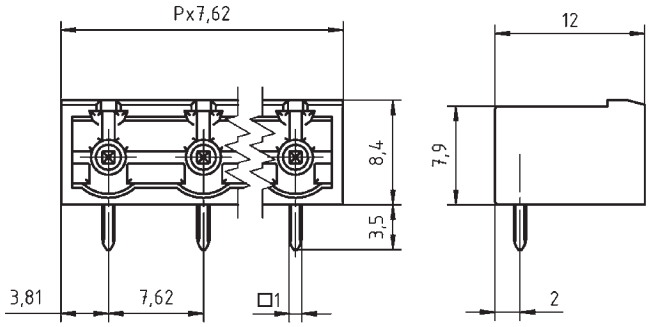

COLOURS[1]

- GREEN, RAL 6018
- LIGHT GREEN, similar RAL 6018
- BASALT GREY, RAL 7012

COUNTERPARTS (SPACING 7.62 MM)

PCB Terminal Block
AKZ960

ORDER DATA (SPACING 7.62 MM)

Poles	Width (mm)	Article Designation	Article Number	PU
2	15.24	STLZ960/2G-7.62-H-GREEN	50960025021E	100
3	22.86	STLZ960/3G-7.62-H-GREEN	50960035021E	100
4	30.48	STLZ960/4G-7.62-H-GREEN	50960045021E	100
5	38.10	STLZ960/5G-7.62-H-GREEN	50960055021E	100
6	45.72	STLZ960/6G-7.62-H-GREEN	50960065021D	50
7	53.34	STLZ960/7G-7.62-H-GREEN	50960075021D	50
8	60.96	STLZ960/8G-7.62-H-GREEN	50960085021D	50
9	68.58	STLZ960/9G-7.62-H-GREEN	50960095021D	50
10	76.20	STLZ960/10G-7.62-H-GREEN	50960105021D	50
11	83.82	STLZ960/11G-7.62-H-GREEN	50960115021D	50
12	91.44	STLZ960/12G-7.62-H-GREEN	50960125021D	50
13	99.06	STLZ960/13G-7.62-H-GREEN	50960135021D	50
14	106.68	STLZ960/14G-7.62-H-GREEN	50960145021D	50
15	114.30	STLZ960/15G-7.62-H-GREEN	50960155021D	50
16	121.92	STLZ960/16G-7.62-H-GREEN	50960165021D	50

ACCESSORIES

	Description	Article Number
	Coding Star CS2-5.0/5.08-RED	50000000024
	Separating Element SE-STL950-GREEN	50950000002

RATINGS

	c UL us			VDE
Usegroup	B	C	D	
Rated Voltage	300 V	150 V	300 V	400 V
Rated Current	15 A	15 A	10 A	12 A
Overvoltage Category				III
Test Voltage	1.6 kV	1.3 kV	1.6 kV	4.0 kV
Pollution Degree				3

[1]Colours according to RAL, there may be variations on colour due to production conditions. Special colours on request.

L'IMPULSION
Retrouvez nous sur
www.limpulsion.fr

NEW

STLZ960/..G-7.62-H-GREEN-HC

Spacing 7.62 mm



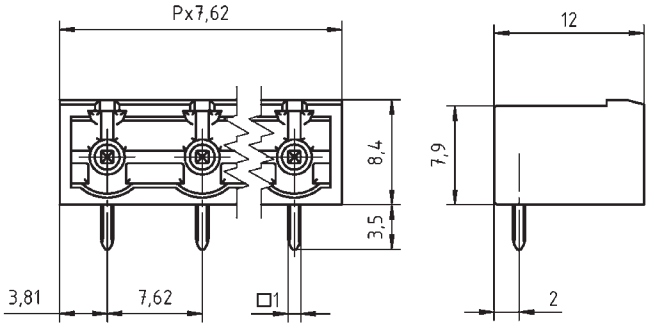

WIRE SIZES	
solid min	-
solid max	-
stranded min	-
stranded max	-
stranded with ferrule min	-
stranded with ferrule max	-
DIMENSIONS	
Stripped Length	-
PCB Hole Diameter	1.4 mm
MATERIALS	
Contact Pin	Copper Alloy
INSULATING MATERIAL	
Material	PA 6.6
Flammability Class	UL 94 V-0
TEMPERATURES	
Operating Temperature (without mech. load)	-40 °C - 105 °C
WAVE SOLDERING PROCESS	
Soldering Temperature, recommended	260 °C
Peak Soldering Time, recommended	3-4 s
REFLOW PROCESS	
Soldering Temperature, recommended	-
Peak Soldering Time, recommended	-

COLOURS[1]

GREEN, RAL 6018

LIGHT GREEN, similar RAL 6018

COUNTERPARTS (SPACING 7.62 MM)

PCB Terminal Block

AKZ960

ACCESSORIES

	Description	Article Number
	Coding Star CS2-5.0/5.08-RED	50000000024
	Separating Element SE-STL950-GREEN	50950000002

ORDER DATA (SPACING 7.62 MM)

Poles	Width (mm)	Article Designation	Article Number	PU
2	15.24	STLZ960/2G-7.62-H-GREEN-HC	50960025029E	100
3	22.86	STLZ960/3G-7.62-H-GREEN-HC	50960035029E	100
4	30.48	STLZ960/4G-7.62-H-GREEN-HC	50960045029E	100
5	38.10	STLZ960/5G-7.62-H-GREEN-HC	50960055029E	100
6	45.72	STLZ960/6G-7.62-H-GREEN-HC	50960065029D	50
7	53.34	STLZ960/7G-7.62-H-GREEN-HC	50960075029D	50
8	60.96	STLZ960/8G-7.62-H-GREEN-HC	50960085029D	50
9	68.58	STLZ960/9G-7.62-H-GREEN-HC	50960095029D	50
10	76.20	STLZ960/10G-7.62-H-GREEN-HC	50960105029D	50
11	83.82	STLZ960/11G-7.62-H-GREEN-HC	50960115029D	50
12	91.44	STLZ960/12G-7.62-H-GREEN-HC	50960125029D	50
13	99.06	STLZ960/13G-7.62-H-GREEN-HC	50960135029D	50
14	106.68	STLZ960/14G-7.62-H-GREEN-HC	50960145029D	50
16	121.92	STLZ960/16G-7.62-H-GREEN-HC	50960165029D	50

RATINGS

Usegroup	B	C	D	
Rated Voltage	300 V	150 V	300 V	400 V
Rated Current	16 A	16 A	10 A	16 A
Overvoltage Category				III
Test Voltage	1.6 kV	1.3 kV	1.6 kV	4.0 kV
Pollution Degree				3

[1]Colours according to RAL, there may be variations on colour due to production conditions. Special colours on request.

Spacing 7.62 mm

STLZ965/..F-7.62-V-GREEN

WIRE SIZES	
solid min	-
solid max	-
stranded min	-
stranded max	-
stranded with ferrule min	-
stranded with ferrule max	-
DIMENSIONS	
Stripped Length	-
PCB Hole Diameter	1.6 mm
MATERIALS	
Thread Insert, Flange	Brass
Contact Pin	Brass
INSULATING MATERIAL	
Material	PBT
Flammability Class	UL 94 V-0
TEMPERATURES	
Operating Temperature (without mech. load)	-40 °C - 105 °C
WAVE SOLDERING PROCESS	
Soldering Temperature, recommended	260 °C
Peak Soldering Time, recommended	3-4 s
REFLOW PROCESS	
Soldering Temperature, recommended	-
Peak Soldering Time, recommended	-



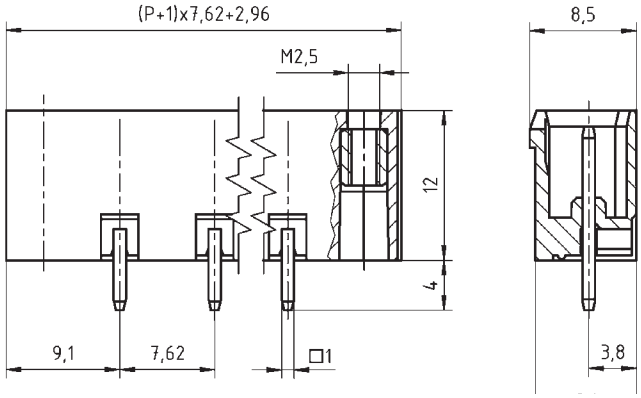

COLOURS[1]

- GREEN, RAL 6018
- LIGHT GREEN, similar RAL 6018
- BASALT GREY, RAL 7012

COUNTERPARTS (SPACING 7.62 MM)

PCB Terminal Block
AKZ965

ORDER DATA (SPACING 7.62 MM)

Poles	Width (mm)	Article Designation	Article Number	PU
2	25.82	STLZ965/2F-7.62-V-GREEN	50965026121E	100
3	33.44	STLZ965/3F-7.62-V-GREEN	50965036121E	100
4	41.06	STLZ965/4F-7.62-V-GREEN	50965046121D	50
5	48.68	STLZ965/5F-7.62-V-GREEN	50965056121D	50
6	56.30	STLZ965/6F-7.62-V-GREEN	50965066121D	50
7	63.92	STLZ965/7F-7.62-V-GREEN	50965076121D	50
8	71.54	STLZ965/8F-7.62-V-GREEN	50965086121D	50
9	79.16	STLZ965/9F-7.62-V-GREEN	50965096121D	50
10	86.78	STLZ965/10F-7.62-V-GREEN	50965106121D	50
11	94.40	STLZ965/11F-7.62-V-GREEN	50965116121D	50
12	102.02	STLZ965/12F-7.62-V-GREEN	50965126121D	50
13	109.64	STLZ965/13F-7.62-V-GREEN	50965136121D	50
14	117.26	STLZ965/14F-7.62-V-GREEN	50965146121D	50
15	124.88	STLZ965/15F-7.62-V-GREEN	50965156121D	50
16	132.50	STLZ965/16F-7.62-V-GREEN	50965166121D	50

ACCESSORIES

	Description	Article Number
	Coding Star CS3-5.0/5.08-RED	50000000025
	Separating Element SE-STL950-GREEN	50950000002

RATINGS

	cULus		VDE	
Usegroup	B	C	D	
Rated Voltage	300 V	-	300 V	250 V
Rated Current	10 A	-	10 A	12 A
Overvoltage Category				III
Test Voltage	1.6 kV	-	1.6 kV	4.0 kV
Pollution Degree				3

[1]Colours according to RAL, there may be variations on colour due to production conditions. Special colours on request.

L'IMPULSION
Retrouvez nous sur
www.limpulsion.fr

STLZ965/..F-7.62-H-GREEN

Spacing 7.62 mm

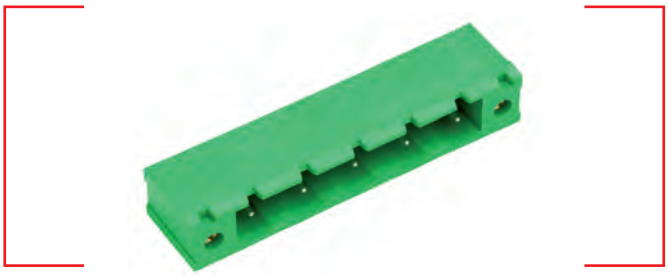

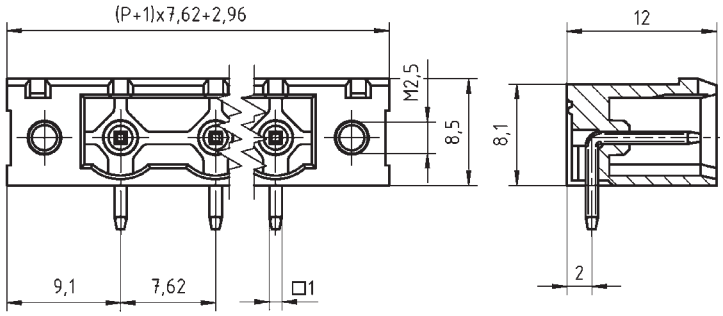

WIRE SIZES	
solid min	-
solid max	-
stranded min	-
stranded max	-
stranded with ferrule min	-
stranded with ferrule max	-
DIMENSIONS	
Stripped Length	-
PCB Hole Diameter	1.6 mm
MATERIALS	
Thread Insert, Flange	Brass
Contact Pin	Brass
INSULATING MATERIAL	
Material	PBT
Flammability Class	UL 94 V-0
TEMPERATURES	
Operating Temperature (without mech. load)	-40 °C - 105 °C
WAVE SOLDERING PROCESS	
Soldering Temperature, recommended	260 °C
Peak Soldering Time, recommended	3-4 s
REFLOW PROCESS	
Soldering Temperature, recommended	-
Peak Soldering Time, recommended	-

COLOURS[1]

	GREEN, RAL 6018		LIGHT GREEN, similar RAL 6018
	BASALT GREY, RAL 7012		

COUNTERPARTS (SPACING 7.62 MM)

PCB Terminal Block

AKZ965

ACCESSORIES

	Description	Article Number
	Coding Star CS3-5.0/5.08-RED	50000000025
	Separating Element SE-STL950-GREEN	50950000002

RATINGS

	cULus		VDE	
Usegroup	B	C	D	
Rated Voltage	300 V	-	300 V	250 V
Rated Current	10 A	-	10 A	12 A
Overvoltage Category				III
Test Voltage	1.6 kV	-	1.6 kV	4.0 kV
Pollution Degree				3

ORDER DATA (SPACING 7.62 MM)

Poles	Width (mm)	Article Designation	Article Number	PU
2	25.82	STLZ965/2F-7.62-H-GREEN	50965026021E	100
3	33.44	STLZ965/3F-7.62-H-GREEN	50965036021E	100
4	41.06	STLZ965/4F-7.62-H-GREEN	50965046021D	50
5	48.68	STLZ965/5F-7.62-H-GREEN	50965056021D	50
6	56.30	STLZ965/6F-7.62-H-GREEN	50965066021D	50
7	63.92	STLZ965/7F-7.62-H-GREEN	50965076021D	50
8	71.54	STLZ965/8F-7.62-H-GREEN	50965086021D	50
9	79.16	STLZ965/9F-7.62-H-GREEN	50965096021D	50
10	86.78	STLZ965/10F-7.62-H-GREEN	50965106021D	50
11	94.40	STLZ965/11F-7.62-H-GREEN	50965116021D	50
12	102.02	STLZ965/12F-7.62-H-GREEN	50965126021D	50
13	109.64	STLZ965/13F-7.62-H-GREEN	50965136021D	50
14	117.26	STLZ965/14F-7.62-H-GREEN	50965146021D	50
15	124.88	STLZ965/15F-7.62-H-GREEN	50965156021D	50
16	132.50	STLZ965/16F-7.62-H-GREEN	50965166021D	50

[1]Colours according to RAL, there may be variations on colour due to production conditions. Special colours on request.

Spacing 10.0 mm / Spacing 10.16 mm

STL130/..-10.0-V-BLACK
STLZ130/..-10.16-V-BLACK



WIRE SIZES	
solid min	-
solid max	-
stranded min	-
stranded max	-
stranded with ferrule min	-
stranded with ferrule max	-
DIMENSIONS	
Stripped Length	-
PCB Hole Diameter	1.5 mm
MATERIALS	
Contact Pin	Brass
INSULATING MATERIAL	
Material	PA 6.6
Flammability Class	UL 94 V-0
TEMPERATURES	
Operating Temperature (without mech. load)	-40 °C - 105 °C
WAVE SOLDERING PROCESS	
Soldering Temperature, recommended	260 °C
Peak Soldering Time, recommended	3-4 s
REFLOW PROCESS	
Soldering Temperature, recommended	-
Peak Soldering Time, recommended	-

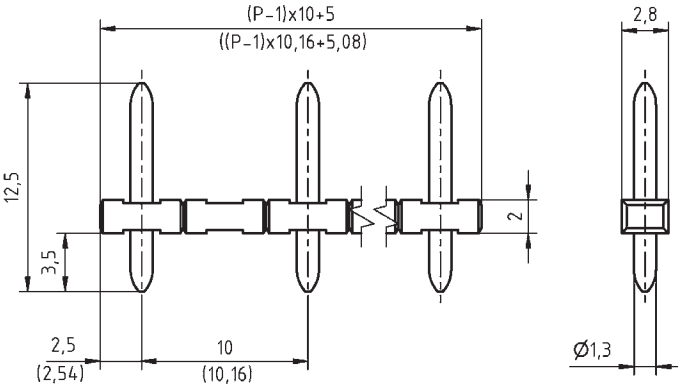

COLOURS[1]			
BLACK, RAL 9011		LIGHT GREY, RAL 7035	
GREEN, RAL 6018		ORANGE, RAL 2011	
RED, RAL 3003		BLUE, RAL 5015	
YELLOW, RAL 1018		LIGHT GREEN, similar RAL 6018	

COUNTERPARTS (SPACING 10.0 MM)

PCB Terminal Block

AK130

COUNTERPARTS (SPACING 10.16 MM)

PCB Terminal Block

AKZ130

ORDER DATA (SPACING 10.0 MM)

Poles	Width (mm)	Article Designation	Article Number	PU
2	15.00	STL130/2-10.0-V-BLACK	50130025021F	200
3	25.00	STL130/3-10.0-V-BLACK	50130035021E	100
4	35.00	STL130/4-10.0-V-BLACK	50130045021E	100
5	45.00	STL130/5-10.0-V-BLACK	50130055021E	100
6	55.00	STL130/6-10.0-V-BLACK	50130065021D	50
7	65.00	STL130/7-10.0-V-BLACK	50130075021D	50
8	75.00	STL130/8-10.0-V-BLACK	50130085021D	50
9	85.00	STL130/9-10.0-V-BLACK	50130095021D	50
...	...	...	...	...
12	115.00	STL130/12-10.0-V-BLACK	50130125021D	50

ORDER DATA (SPACING 10.16 MM)

Poles	Width (mm)	Article Designation	Article Number	PU
2	15.24	STLZ130/2-10.16-V-BLACK	50130025071F	200
3	25.40	STLZ130/3-10.16-V-BLACK	50130035071E	100
4	35.56	STLZ130/4-10.16-V-BLACK	50130045071E	100
5	45.72	STLZ130/5-10.16-V-BLACK	50130055071E	100
6	55.88	STLZ130/6-10.16-V-BLACK	50130065071D	50

RATINGS	c UL us			VDE
Usegroup	B	C	D	
Rated Voltage	300 V	150 V	300 V	630 V
Rated Current	10 A	10 A	10 A	7 A
Overvoltage Category				III
Test Voltage	1.6 kV	1.3 kV	1.6 kV	6.0 kV
Pollution Degree				3

[1]Colours according to RAL, there may be variations on colour due to production conditions. Special colours on request.

L'IMPULSION
Retrouvez nous sur
www.limpulsion.fr

STL130/..-10.0-V-BLACK-HT

Spacing 10.0 mm



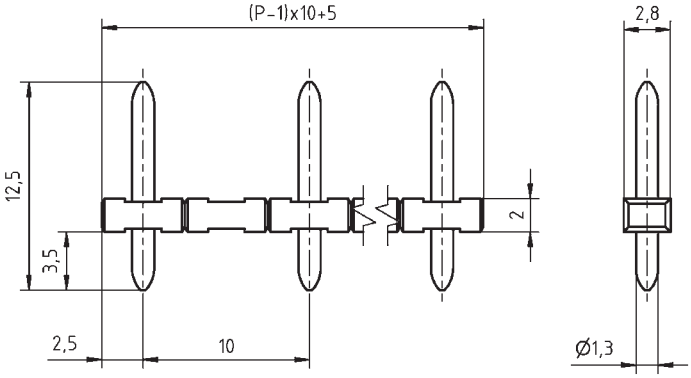

WIRE SIZES	
solid min	-
solid max	-
stranded min	-
stranded max	-
stranded with ferrule min	-
stranded with ferrule max	-
DIMENSIONS	
Stripped Length	-
PCB Hole Diameter	1.5 mm
MATERIALS	
Contact Pin	Brass
INSULATING MATERIAL	
Material	LCP
Flammability Class	UL 94 V-0
TEMPERATURES	
Operating Temperature (without mech. load)	-40 °C - 105 °C
WAVE SOLDERING PROCESS	
Soldering Temperature, recommended	260 °C
Peak Soldering Time, recommended	3-4 s
REFLOW PROCESS	
Soldering Temperature, recommended	217 °C - 245 °C
Peak Soldering Time, recommended	60 s

COLOURS[1]
BLACK, RAL 9011

COUNTERPARTS (SPACING 10.0 MM)
PCB Terminal Block
AK130

ORDER DATA (SPACING 10.0 MM)

Poles	Width (mm)	Article Designation	Article Number	PU
2	15.00	STL130/2-10.0-V-BLACK-HT	50130025061F	200
3	25.00	STL130/3-10.0-V-BLACK-HT	50130035061E	100
4	35.00	STL130/4-10.0-V-BLACK-HT	50130045061E	100
5	45.00	STL130/5-10.0-V-BLACK-HT	50130055061E	100
6	55.00	STL130/6-10.0-V-BLACK-HT	50130065061D	50
7	65.00	STL130/7-10.0-V-BLACK-HT	50130075061D	50
8	75.00	STL130/8-10.0-V-BLACK-HT	50130085061D	50
9	85.00	STL130/9-10.0-V-BLACK-HT	50130095061D	50
10	95.00	STL130/10-10.0-V-BLACK-HT	50130105061D	50
11	105.00	STL130/11-10.0-V-BLACK-HT	50130115061D	50
12	115.00	STL130/12-10.0-V-BLACK-HT	50130125061D	50

RATINGS	c UL us			VDE
Usegroup	B	C	D	
Rated Voltage	300 V	150 V	300 V	500 V
Rated Current	10 A	10 A	10 A	7 A
Overvoltage Category				III
Test Voltage	1.6 kV	1.3 kV	1.6 kV	6.0 kV
Pollution Degree				2

[1]Colours according to RAL, there may be variations on colour due to production conditions. Special colours on request.

Spacing 10.0 mm

STL132/..-10.0-V-BLACK

WIRE SIZES	
solid min	-
solid max	-
stranded min	-
stranded max	-
stranded with ferrule min	-
stranded with ferrule max	-
DIMENSIONS	
Stripped Length	-
PCB Hole Diameter	1.2 mm
MATERIALS	
Contact Pin	Brass
INSULATING MATERIAL	
Material	PA 6.6
Flammability Class	UL 94 V-0
TEMPERATURES	
Operating Temperature (without mech. load)	-40 °C - 105 °C
WAVE SOLDERING PROCESS	
Soldering Temperature, recommended	260 °C
Peak Soldering Time, recommended	3-4 s
REFLOW PROCESS	
Soldering Temperature, recommended	-
Peak Soldering Time, recommended	-



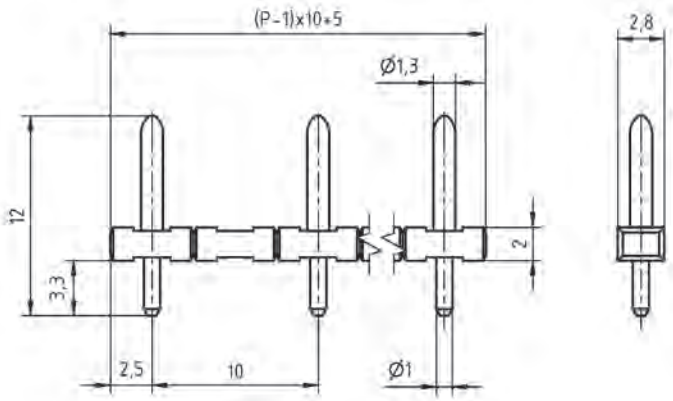

COLOURS[1]	
	BLACK, RAL 9011

COUNTERPARTS (SPACING 10.0 MM)
PCB Terminal Block
AK130

ORDER DATA (SPACING 10.0 MM)

Poles	Width (mm)	Article Designation	Article Number	PU
2	15.00	STL132/2-10.0-V-BLACK	50132025021H	500
3	25.00	STL132/3-10.0-V-BLACK	50132035021G	250
4	35.00	STL132/4-10.0-V-BLACK	50132045021G	250
5	45.00	STL132/5-10.0-V-BLACK	50132055021E	100
6	55.00	STL132/6-10.0-V-BLACK	50132065021E	100
7	65.00	STL132/7-10.0-V-BLACK	50132075021E	100
8	75.00	STL132/8-10.0-V-BLACK	50132085021E	100
9	85.00	STL132/9-10.0-V-BLACK	50132095021D	50
10	95.00	STL132/10-10.0-V-BLACK	50132105021D	50
11	105.00	STL132/11-10.0-V-BLACK	50132115021D	50
12	115.00	STL132/12-10.0-V-BLACK	50132125021D	50

RATINGS	c UL us			VDE
Usegroup	B	C	D	
Rated Voltage	300 V	-	-	630 V
Rated Current	10 A	-	-	7 A
Overvoltage Category				III
Test Voltage	1.6 kV	-	-	6.0 kV
Pollution Degree				3

[1]Colours according to RAL, there may be variations on colour due to production conditions. Special colours on request.

L'IMPULSION
Retrouvez nous sur
www.limpulsion.fr

STL132/..-10.0-V-BLACK-HT

Spacing 10.0 mm



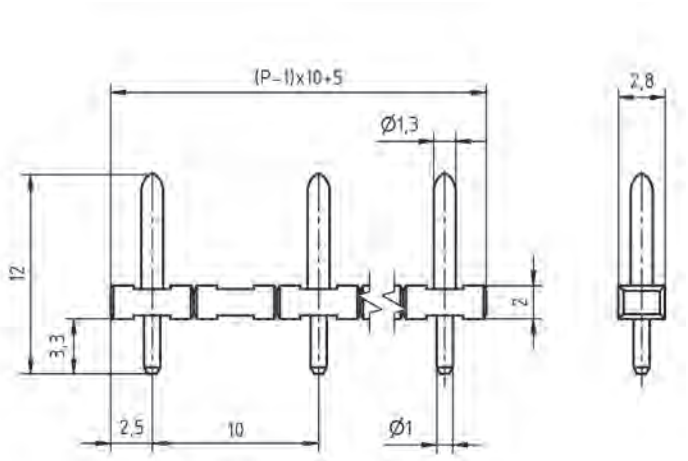

WIRE SIZES	
solid min	-
solid max	-
stranded min	-
stranded max	-
stranded with ferrule min	-
stranded with ferrule max	-
DIMENSIONS	
Stripped Length	-
PCB Hole Diameter	1.2 mm
MATERIALS	
Contact Pin	Brass
INSULATING MATERIAL	
Material	LCP
Flammability Class	UL 94 V-0
TEMPERATURES	
Operating Temperature (without mech. load)	-40 °C - 105 °C
WAVE SOLDERING PROCESS	
Soldering Temperature, recommended	260 °C
Peak Soldering Time, recommended	3-4 s
REFLOW PROCESS	
Soldering Temperature, recommended	217 °C - 245 °C
Peak Soldering Time, recommended	60 s

COLOURS[1]
BLACK, RAL 9011

COUNTERPARTS (SPACING 10.0 MM)
PCB Terminal Block
AK130

ORDER DATA (SPACING 10.0 MM)

Poles	Width (mm)	Article Designation	Article Number	PU
2	15.00	STL132/2-10.0-V-BLACK-HT	50132025051H	500
3	25.00	STL132/3-10.0-V-BLACK-HT	50132035051G	250
4	35.00	STL132/4-10.0-V-BLACK-HT	50132045051G	250
5	45.00	STL132/5-10.0-V-BLACK-HT	50132055051E	100
6	55.00	STL132/6-10.0-V-BLACK-HT	50132065051E	100
7	65.00	STL132/7-10.0-V-BLACK-HT	50132075051E	100
8	75.00	STL132/8-10.0-V-BLACK-HT	50132085051E	100
9	85.00	STL132/9-10.0-V-BLACK-HT	50132095051D	50
10	95.00	STL132/10-10.0-V-BLACK-HT	50132105051D	50
11	105.00	STL132/11-10.0-V-BLACK-HT	50132115051D	50
12	115.00	STL132/12-10.0-V-BLACK-HT	50132125051D	50

RATINGS	c UL us			VDE
Usegroup	B	C	D	
Rated Voltage	300 V	-	-	500 V
Rated Current	10 A	-	-	7 A
Overvoltage Category				III
Test Voltage	1.6 kV	-	-	6.0 kV
Pollution Degree				3

[1]Colours according to RAL, there may be variations on colour due to production conditions. Special colours on request.

L'IMPULSION Retrouvez nous sur www.limpulsion.fr

INTERFACE PIN BLOCKS

Interface Pin Blocks serve the same function as battery probes. They can be used as a charging contact in almost all mobile devices, but also for connecting PCBs and as signal conductors, etc.

In such cases, the important advantage is that our standard allows the simultaneous positioning of up to 20 contacts which can be soldered onto the PCB using reflow processes.

As a result of our considerable experience in the manufacturing of injection moulding tools for the connection technologiy sector, PTR HARTMANN offers complete solutions including plastic carriers, tape-and-reel, and "pick & place" pads, including for individually adapted products. Other types of packing, for example trays, are also available for small quantities and less-automated manufacturing processes. We develop professional solutions together with our customers, and then implement them as scheduled.

The quality of our contacts complies with internationally recognized test scenarios. Our interface pin blocks are approved with UL certification in both the USA and Canada regions.

Series 5322 has passed vibration and shock tests without any measurable contact loss according to the following standards:

» IEC 60068-2-6, Test Fc: Vibration (sinusoidal)
» IEC 60068-2-27, Test Ea and guidance: Shock
» IEC 60512-2-5, Test 2e: Contact disturbance

L'IMPULSION | Retrouvez nous sur www.limpulsion.fr

SERIES	SPACING	PAGE
5322 - FKB - SMD	100 mil / 2.54 mm	334
5322 - PKB - SMD	100 mil / 2.54 mm	335
5322 - L01	100 mil / 2.54 mm	336
5322 - T01	100 mil / 2.54 mm	337
5458 - SMD	100 mil / 2.54 mm	338
5447 - SMD	100 mil / 2.54 mm	339



L'IMPULSION
Retrouvez nous sur
www.limpulsion.fr

FKB 5322 - SMD

Interface Pin Block
100 mil / 2.54 mm



FKB 5322/1

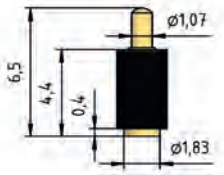

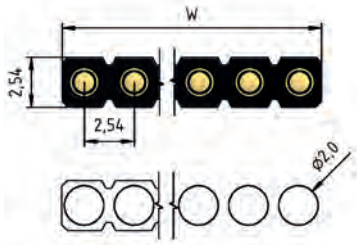

FKB 5322/2

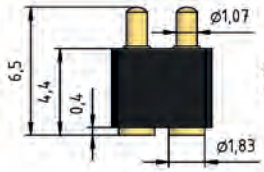

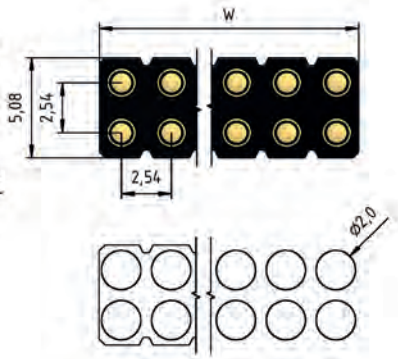

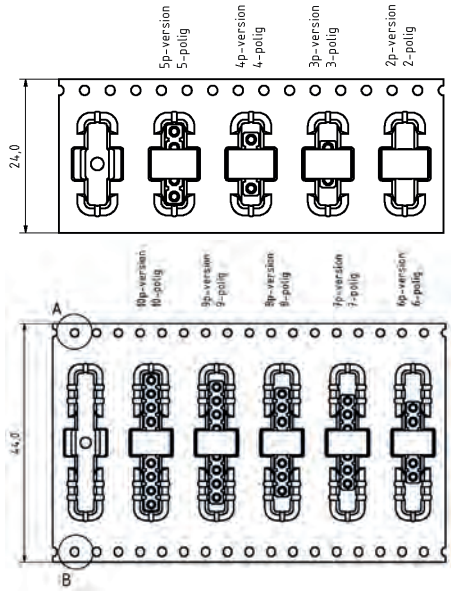

How to order

FKB5322	/1	-	2	-	65	-	R24
1	2		3		4		5

1 Series 2 Number of Rows 3 Number of Poles 4 Installation height
5 Tape on reel

BENEFIT		
Short, compact size		
Board-to-board contacting		
Suitable for reflow soldering - SMD / Automated Assembly (Tape on reel)		
2 to 20 poles / 1 and 2 rows available		
MECHANICAL DATA		
Center	2.54 mm / 100 mil	
Full Travel	1.40 mm	
Working Travel	0.70 mm	
Pre-Loaded Spring Force	0.25 N	
Spring Force at Working Travel	0.85 N	
ELECTRICAL DATA		
Max. Current Rating	3.5 A	
Typical Continuity Resistance	≤ 20 mOhm	
MATERIALS		
Barrel	Brass, gold-plated	
Spring	Spring Steel, gold-plated	
Plunger	Brass, gold-plated	
Test Probe Block	PA	
TAPE ON REEL (EN 60286-3)		
Tape on reel width	44 mm / 24 mm	
Spooling diameter	15“	
Number of components	800	
Pitch	12 mm	
OPERATING LIFE		
Cycles	50,000	
RATINGS	cULus	cULus
Rated Current	3.5 A	2.0 A
Rated Voltage - DC	150 V	150 V
Rated Voltage - AC	100 V	100 V
Flammability Class	UL 94 V-0	UL 94 V-0

ORDER DATA

Poles	Width (mm)	Article Designation	Article Number	PU
FKB 5322/1				
2	5.08	FKB 5322/1-02-65-R24	65322F30265	PCS800
3	7.62	FKB 5322/1-03-65-R24	65322F30365	PCS800
4	10.16	FKB 5322/1-04-65-R24	65322F30465	PCS800
5	12.70	FKB 5322/1-05-65-R24	65322F30565	PCS800
6	15.24	FKB 5322/1-06-65-R44	65322F30665	PCS800
7	17.78	FKB 5322/1-07-65-R44	65322F30765	PCS800
8	20.32	FKB 5322/1-08-65-R44	65322F30865	PCS800
9	22.86	FKB 5322/1-09-65-R44	65322F30965	PCS800
10	25.40	FKB 5322/1-10-65-R44	65322F31065	PCS800
FKB 5322/2				
4	5.08	FKB 5322/2-04-65-R24	65322F40465	PCS800
6	7.62	FKB 5322/2-06-65-R24	65322F40665	PCS800
8	10.16	FKB 5322/2-08-65-R24	65322F40865	PCS800
10	12.70	FKB 5322/2-10-65-R24	65322F41065	PCS800
12	15.24	FKB 5322/2-12-65-R44	65322F41265	PCS800
14	17.78	FKB 5322/2-14-65-R44	65322F41465	PCS800
16	20.32	FKB 5322/2-16-65-R44	65322F41665	PCS800
18	22.86	FKB 5322/2-18-65-R44	65322F41865	PCS800
20	25.40	FKB 5322/2-20-65-R44	65322F42065	PCS800

Interface Pin Block
100 mil / 2.54 mm

PKB 5322 - SMD

BENEFIT		
Short, compact size		
Board-to-board contacting		
Suitable for reflow soldering - SMD / Automated Assembly (Tape on reel)		
2 to 20 poles / 1 and 2 rows available		
MECHANICAL DATA		
Center	2.54 mm / 100 mil	
ELECTRICAL DATA		
Max. Current Rating	3.5 A	
Typical Continuity Resistance	≤ 20 mOhm	
MATERIALS		
PAD contact	Brass, gold-plated	
Test Probe Block	PA	
TAPE ON REEL (EN 60286-3)		
Tape on reel width	44 mm / 24 mm	
Spooling diameter	15“	
Number of components	800	
Pitch	12 mm	
RATINGS		
Rated Current	3.5 A	2.0 A
Rated Voltage - DC	150 V	150 V
Rated Voltage - AC	100 V	100 V
Flammability Class	UL 94 V-0	UL 94 V-0

ORDER DATA

Poles	Width (mm)	Article Designation	Article Number	PU
PKB 5322/1				
2	5.08	PKB 5322/1-02-50-R24	65322P30250	PCS800
3	7.62	PKB 5322/1-03-50-R24	65322P30350	PCS800
4	10.16	PKB 5322/1-04-50-R24	65322P30450	PCS800
5	12.70	PKB 5322/1-05-50-R24	65322P30550	PCS800
6	15.24	PKB 5322/1-06-50-R44	65322P30650	PCS800
7	17.78	PKB 5322/1-07-50-R44	65322P30750	PCS800
8	20.32	PKB 5322/1-08-50-R44	65322P30850	PCS800
9	22.86	PKB 5322/1-09-50-R44	65322P30950	PCS800
10	25.40	PKB 5322/1-10-50-R44	65322P31050	PCS800
PKB 5322/2				
4	5.08	PKB5322/2-04-50-R24	65322P40450	PCS800
6	7.62	PKB5322/2-06-50-R24	65322P40650	PCS800
8	10.16	PKB5322/2-08-50-R24	65322P40850	PCS800
10	12.70	PKB5322/2-10-50-R24	65322P41050	PCS800
12	15.24	PKB5322/2-12-50-R44	65322P41250	PCS800
14	17.78	PKB5322/2-14-50-R44	65322P41450	PCS800
16	20.32	PKB5322/2-16-50-R44	65322P41650	PCS800
18	22.86	PKB5322/2-18-50-R44	65322P41850	PCS800
20	25.40	PKB5322/2-20-50-R44	65322P42050	PCS800

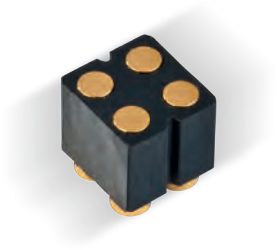

PKB 5322/1

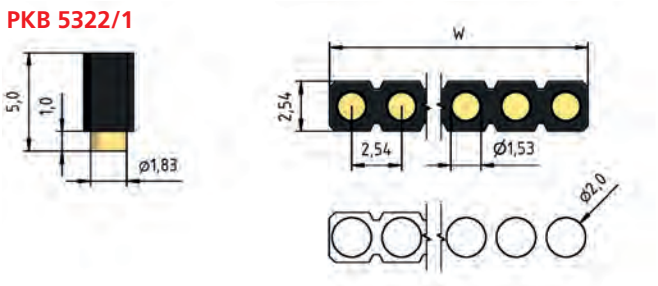

PKB 5322/2

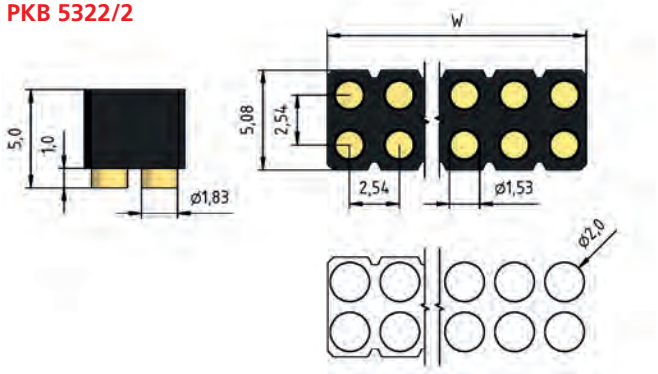

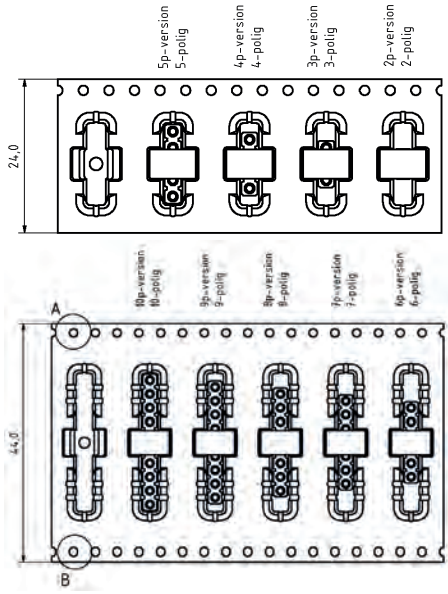

How to order

PKB5322	/1	-	2	-	50	-	R24
1			2		3		4	5

1 Series 2 Number of Rows 3 Number of Poles 4 Installation height
5 Tape on reel

L'IMPULSION
Retrouvez nous sur
www.limpulsion.fr

FKB 5322 - L01

Interface Pin Block
100 mil / 2.54 mm

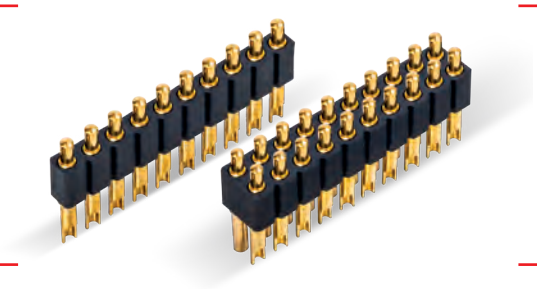

FKB 5322/1 - L01

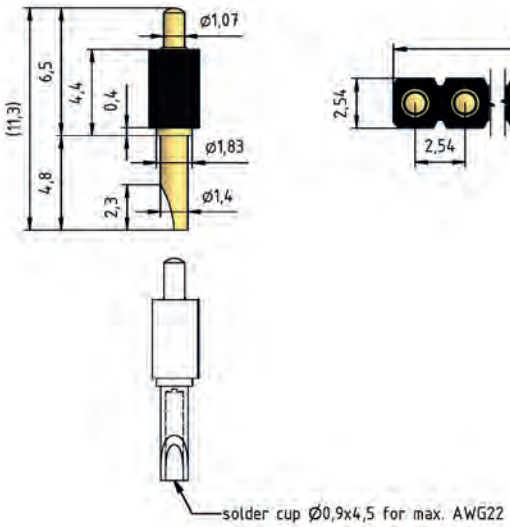

FKB 5322/2 - L01

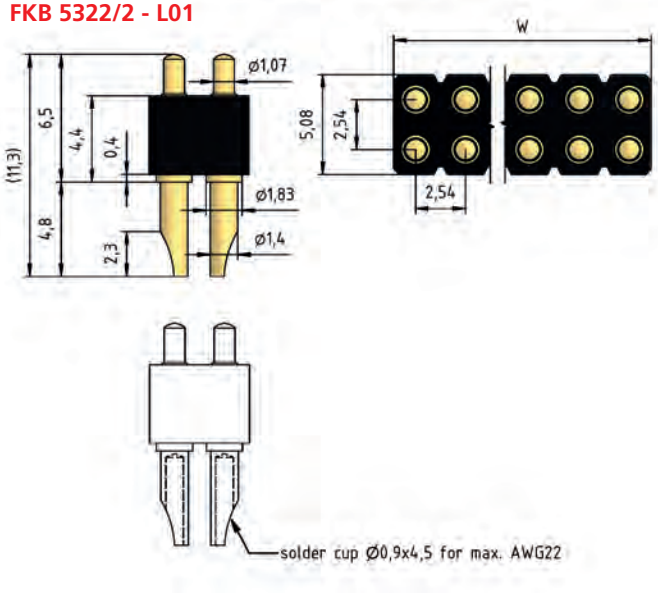

BENEFIT	
Short, compact size	
Individual wiring	
2 to 20 poles / 1 and 2 rows available	
MECHANICAL DATA	
Center	2.54 mm / 100 mil
Full Travel	1.40 mm
Working Travel	0.70 mm
Pre-Loaded Spring Force	0.25 N
Spring Force at Working Travel	0.85 N
ELECTRICAL DATA	
Max. Current Rating	3.5 A
Typical Continuity Resistance	≤ 20 mOhm
MATERIALS	
Barrel	Brass, gold-plated
Spring	Spring Steel, gold-plated
Plunger	Brass, gold-plated
Test Probe Block	PA
OPERATING LIFE	
Cycles	50,000

ORDER DATA

Poles	Width (mm)	Article Designation	Article Number	PU
FKB 5322/1 - L01				
2	5.08	FKB 5322/1-02-65-L01	65322F10265L	PCS100
3	7.62	FKB 5322/1-03-65-L01	65322F10365L	PCS100
4	10.16	FKB 5322/1-04-65-L01	65322F10465L	PCS100
5	12.70	FKB 5322/1-05-65-L01	65322F10565L	PCS100
6	15.24	FKB 5322/1-06-65-L01	65322F10665L	PCS100
7	17.78	FKB 5322/1-07-65-L01	65322F10765L	PCS100
8	20.32	FKB 5322/1-08-65-L01	65322F10865L	PCS100
9	22.86	FKB 5322/1-09-65-L01	65322F10965L	PCS100
10	25.40	FKB 5322/1-10-65-L01	65322F11065L	PCS100
FKB 5322/2 - L01				
4	5.08	FKB 5322/2-04-65-L01	65322F20465L	PCS100
6	7.62	FKB 5322/2-06-65-L01	65322F20665L	PCS100
8	10.16	FKB 5322/2-08-65-L01	65322F20865L	PCS100
10	12.70	FKB 5322/2-10-65-L01	65322F21065L	PCS100
12	15.24	FKB 5322/2-12-65-L01	65322F21265L	PCS100
14	17.78	FKB 5322/2-14-65-L01	65322F21465L	PCS100
16	20.32	FKB 5322/2-16-65-L01	65322F21665L	PCS100
18	22.86	FKB 5322/2-18-65-L01	65322F21865L	PCS100
20	25.40	FKB 5322/2-20-65-L01	65322F22065L	PCS100

How to order

FKB5322	/1	-	2	-	65	-	L01
1	2		3		4		5

1 Series 2 Number of Rows 3 Number of Poles 4 Installation height
5 Versions

Interface Pin Block
100 mil / 2.54 mm

FKB 5322 - T01

BENEFIT	
Short, compact size	
Board-to-board contacting	
Suitable for reflow soldering	
2 to 20 poles / 1 and 2 rows available	
MECHANICAL DATA	
Center	2.54 mm / 100 mil
Full Travel	1.40 mm
Working Travel	0.70 mm
Pre-Loaded Spring Force	0.25 N
Spring Force at Working Travel	0.85 N
ELECTRICAL DATA	
Max. Current Rating	3.5 A
Typical Continuity Resistance	≤ 20 mOhm
MATERIALS	
Barrel	Brass, gold-plated
Spring	Spring Steel, gold-plated
Plunger	Brass, gold-plated
Test Probe Block	PA
OPERATING LIFE	
Cycles	50,000

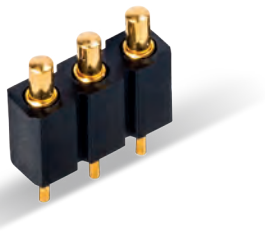

FKB 5322/1 - T01

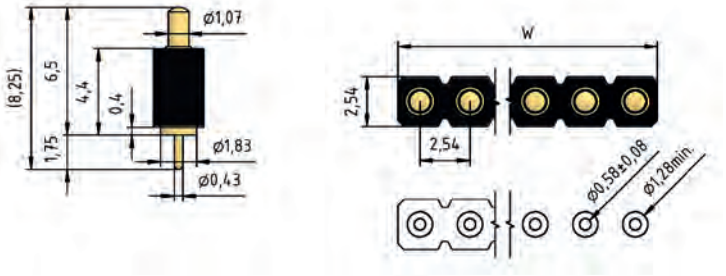

FKB 5322/2 - T01

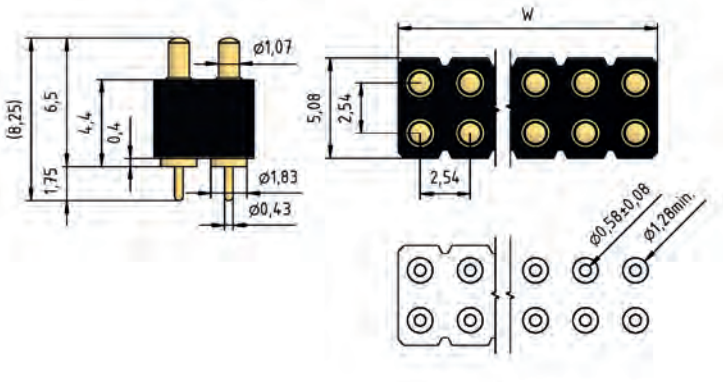

ORDER DATA

Poles	Width (mm)	Article Designation	Article Number	PU
FKB 5322/1 - T01				
2	5.08	FKB 5322/1-02-65-T01	65322F10265T	PCS100
3	7.62	FKB 5322/1-03-65-T01	65322F10365T	PCS100
4	10.16	FKB 5322/1-04-65-T01	65322F10465T	PCS100
5	12.70	FKB 5322/1-05-65-T01	65322F10565T	PCS100
6	15.24	FKB 5322/1-06-65-T01	65322F10665T	PCS100
7	17.78	FKB 5322/1-07-65-T01	65322F10765T	PCS100
8	20.32	FKB 5322/1-08-65-T01	65322F10865T	PCS100
9	22.86	FKB 5322/1-09-65-T01	65322F10965T	PCS100
10	25.40	FKB 5322/1-10-65-T01	65322F11065T	PCS100
FKB 5322/2 - T01				
4	5.08	FKB 5322/2-04-65-T01	65322F20465T	PCS100
6	7.62	FKB 5322/2-06-65-T01	65322F20665T	PCS100
8	10.16	FKB 5322/2-08-65-T01	65322F20865T	PCS100
10	12.70	FKB 5322/2-10-65-T01	65322F21065T	PCS100
12	15.24	FKB 5322/2-12-65-T01	65322F21265T	PCS100
14	17.78	FKB 5322/2-14-65-T01	65322F21465T	PCS100
16	20.32	FKB 5322/2-16-65-T01	65322F21665T	PCS100
18	22.86	FKB 5322/2-18-65-T01	65322F21865T	PCS100
20	25.40	FKB 5322/2-20-65-T01	65322F22065T	PCS100

How to order

FKB5322	/1	-	2	-	65	-	T01
1	2		3		4		5

1 Series 2 Number of Rows 3 Number of Poles 4 Installation height 5 Versions

L'IMPULSION
Retrouvez nous sur
www.limpulsion.fr

FKB 5458 - SMD

Interface Pin Block
50 mil / 1.27 mm

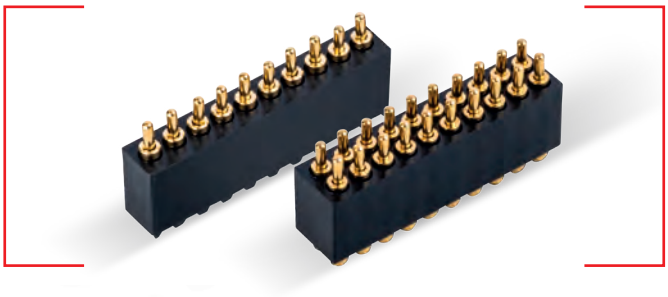

FKB 5458/1

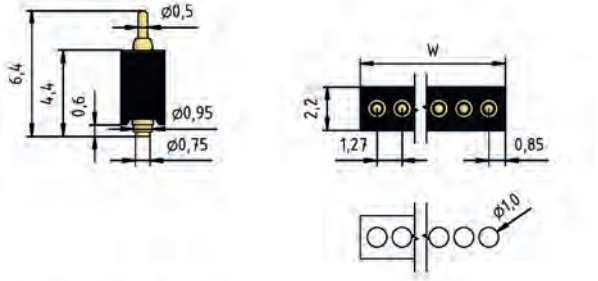

FKB 5458/2

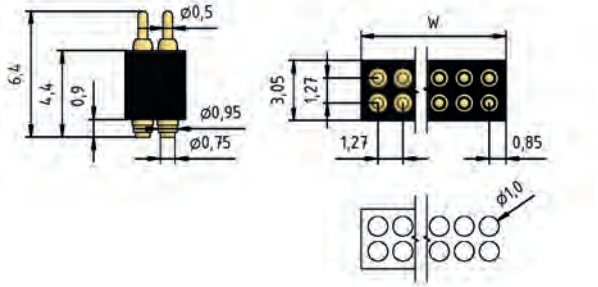

BENEFIT	
Short, compact size	
Board-to-board contacting	
Suitable for reflow soldering - SMD	
2 to 20 poles / 1 and 2 rows available	
MECHANICAL DATA	
Center	1.27 mm / 50 mil
Full Travel	1.40 mm
Working Travel	0.70 mm
Pre-Loaded Spring Force	0.25 N
Spring Force at Working Travel	0.60 N
ELECTRICAL DATA	
Max. Current Rating	2.0 A
Typical Continuity Resistance	≤ 20 mOhm
MATERIALS	
Barrel	Brass, gold-plated
Spring	Stainless Steel, gold-plated
Plunger	Brass, gold-plated
Test Probe Block	PA
OPERATING LIFE	
Cycles	50,000

ORDER DATA

Poles	Width (mm)	Article Designation	Article Number	PU
FKB 5458/1				
2	2.54	FKB 5458/1-02-64	65458F10264T	PCS100
3	3.81	FKB 5458/1-03-64	65458F10364T	PCS100
4	5.08	FKB 5458/1-04-64	65458F10464T	PCS100
5	6.35	FKB 5458/1-05-64	65458F10564T	PCS100
6	7.62	FKB 5458/1-06-64	65458F10664T	PCS100
7	8.89	FKB 5458/1-07-64	65458F10764T	PCS100
8	10.16	FKB 5458/1-08-64	65458F10864T	PCS100
9	11.43	FKB 5458/1-09-64	65458F10964T	PCS100
10	12.70	FKB 5458/1-10-64	65458F11064T	PCS100
FKB 5458/2				
4	2.54	FKB 5458/2-04-64	65458F20464T	PCS100
6	3.81	FKB 5458/2-06-64	65458F20664T	PCS100
8	5.08	FKB 5458/2-08-64	65458F20864T	PCS100
10	6.35	FKB 5458/2-10-64	65458F21064T	PCS100
12	7.62	FKB 5458/2-12-64	65458F21264T	PCS100
14	8.89	FKB 5458/2-14-64	65458F21464T	PCS100
16	10.16	FKB 5458/2-16-64	65458F21664T	PCS100
18	11.43	FKB 5458/2-18-64	65458F21864T	PCS100
20	12.70	FKB 5458/2-20-64	65458F22064T	PCS100

How to order

FKB5458	/1	-	2	-	64
1	2		3		4

1 Series 2 Number of Rows 3 Number of Poles 4 Installation height

Interface Pin Block
100 mil / 2.54 mm

FKB 5457 - SMD

BENEFIT	
Horizontal positioning	
Board-to-board contacting	
Suitable for reflow soldering - SMD	
2 to 12 poles available	
MECHANICAL DATA	
Center	2.54 mm / 100 mil
Full Travel	2.00 mm
Working Travel	1.50 mm
Pre-Loaded Spring Force	0.30 N
Spring Force at Working Travel	1.00 N
ELECTRICAL DATA	
Max. Current Rating	3.5 A
Typical Continuity Resistance	≤ 20 mOhm
MATERIALS	
Barrel	Brass, gold-plated
Spring	Spring Steel, gold-plated
Plunger	Brass, gold-plated
Test Probe Block	PA
TAPE ON REEL (EN 60286-3)	
Tape on reel width	44 mm
Spooling diameter	15“
Number of components	1,600
Pitch	16 mm
OPERATING LIFE	
Cycles	50,000

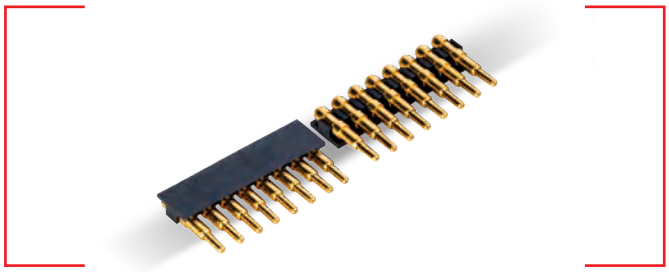

FKB 5457/1

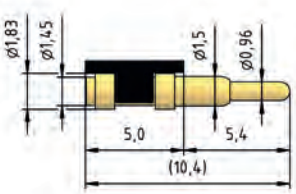

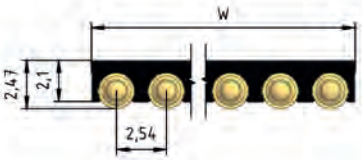

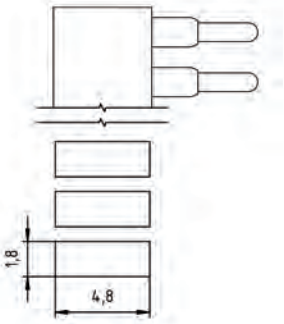

ORDER DATA

Poles	Width (mm)	Article Designation	Article Number	PU
FKB 5457/1				
2	5.08	FKB 5457/1-02-104-R44	65457F202104	PCS800
3	7.62	FKB 5457/1-03-104-R44	65457F203104	PCS800
4	10.16	FKB 5457/1-04-104-R44	65457F204104	PCS800
5	12.70	FKB 5457/1-05-104-R44	65457F205104	PCS800
6	15.24	FKB 5457/1-06-104-R44	65457F206104	PCS800
7	17.78	FKB 5457/1-07-104-R44	65457F207104	PCS800
8	20.32	FKB 5457/1-08-104-R44	65457F208104	PCS800
9	22.86	FKB 5457/1-09-104-R44	65457F209104	PCS800
10	25.40	FKB 5457/1-10-104-R44	65457F210104	PCS800
11	27.94	FKB 5457/1-11-104-R44	65457F211104	PCS800
12	30.48	FKB 5457/1-12-104-R44	65457F212104	PCS800

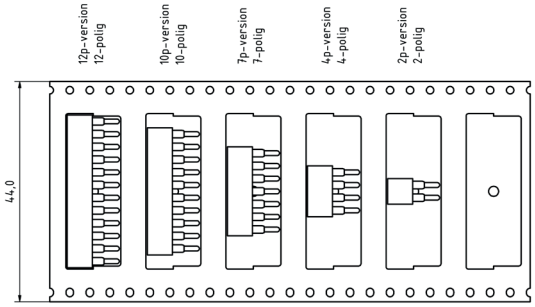

How to order

FKB5457	/1	-	2	-	104	-	R44
1	2		3		4		5

1 Series 2 Number of Rows 3 Number of Poles 4 Installation height
5 Tape on reel

L'IMPULSION Retrouvez nous sur www.limpulsion.fr

ACCESSORIES

A wide variety of accessory articles is available in addition to the comprehensive range of PCB terminal blocks and PCB multi-connectors.

These take the form, inter alia, of insulated and non-insulated bridges for connection of poles for special applications, coding stars to prevent incorrect connections, for THT or THR soldering processes or spacers to increase the conductor spacing and/or for improved visual separation of individual PCB terminal block sectors.
The large range of available accessories makes it possible to increase the functionality and ease of use of the application for the user with only little effort.

L'IMPULSION
Retrouvez nous sur
www.limpulsion.fr

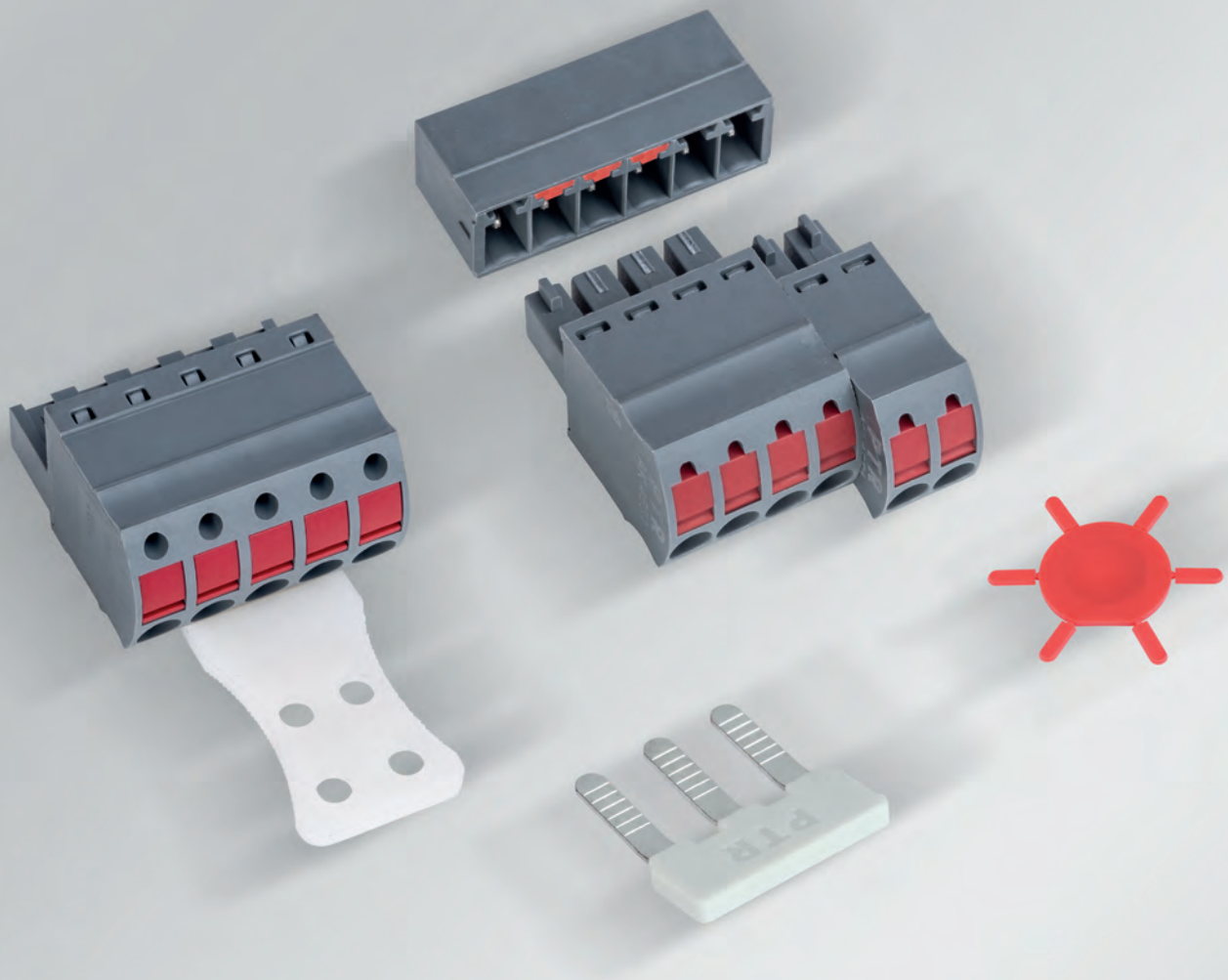

L'IMPULSION
Retrouvez nous sur
www.limpulsion.fr

Accessories



Bridge, 2-pole, insulated,
BRI/2-5.0/5.08-LIGHT GREY
Article Number: 50000000006
Insulated bridge for multi-connection.
Can be used for PCB terminal blocks and PCB multi-connectors with spacing 5.0 mm and 5.08 mm.



Bridge, 3-pole, insulated,
BRI/3-5.0/5.08-LIGHT GREY
Article Number: 50000000007
Insulated bridge for multi-connection.
Can be used for PCB terminal blocks and PCB multi-connectors with spacing 5.0 mm and 5.08 mm.



Bridge, 2-pole, insulated,
BRI/2-7.0/7.62-L7.5-LIGHT GREY
Article Number: 50000000018
Insulated bridge for multi-connection.
Can be used for PCB terminal blocks and PCB multi-connectors with spacing 7.0 mm and 7.62 mm.



Bridge, 2-pole, insulated,
BRI/2-7.5/7.62-L8.2-LIGHT GREY
Article Number: 50000000017
Insulated bridge for multi-connection.
Can be used for PCB terminal blocks and PCB multi-connectors with spacing 7.5 mm and 7.62 mm.



Bridge, 2-pole, BR/2-3.5/3.81-L4.7
Article Number: 50000000013
Uninsulated bridge for multi-connection.
Can be used for PCB terminal blocks and PCB multi-connectors with spacing 3.5 mm and 3.81 mm.



Bridge, 2-pole, BR/2-3.5/3.81-L7.5
Article Number: 50000000015
Uninsulated bridge for multi-connection.
Can be used for PCB terminal blocks and PCB multi-connectors with spacing 3.5 mm and 3.81 mm.



Bridge, 2-pole, angled,
BR/2-3.5/3.81-H-L4.7
Article Number: 50000000019
Angled uninsulated bridge for multi-connection. Can be used for PCB terminal blocks and PCB multi-connectors with spacing 3.5 mm and 3.81 mm.



Bridge, 2-pole, angled,
BR/2-3.5/3.81-H-L7.5
Article Number: 50000000029
Angled uninsulated bridge for multi-connection. Can be used for PCB terminal blocks and PCB multi-connectors with spacing 3.5 mm and 3.81 mm.



Bridge, 3-pole, BR/3-3.5/3.81-L4.7
Article Number: 50000000014
Uninsulated bridge for multi-connection.
Can be used for PCB terminal blocks and PCB multi-connectors with spacing 3.5 mm and 3.81 mm.



Bridge, 3-pole, BR/3-3.5/3.81-L7.5
Article Number: 50000000016
Uninsulated bridge for multi-connection.
Can be used for PCB terminal blocks and PCB multi-connectors with spacing 3.5 mm and 3.81 mm.



Bridge, 2-pole, BR/2-5.0/5.08-L7.0
Article Number: 50000000008
Uninsulated bridge for multi-connection.
Can be used for PCB terminal blocks and PCB multi-connectors with spacing 5.0 mm and 5.08 mm.



Coding Star CS1-3.5/3.81-RED
Article Number: 50000000023
The tongues of the coding star are inserted into the coding slits of the PCB terminal block to prevent the PCB multi-connector from being plugged in incorrectly.



Coding Star CS1-3.5/3.81-NATURAL-HT
Article Number: 50000000022
The tongues of the reflowable coding star are inserted into the coding slits to prevent the PCB multi-connector from being plugged in incorrectly. This coding star is usable in reflow soldering processes.

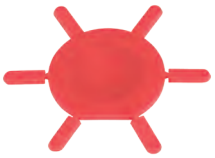

Coding Star CS1-5.0/5.08-RED
Article Number: 50000000021
The tongues of the coding star are inserted into the coding slits of the PCB terminal block to prevent the PCB multi-connector from being plugged in incorrectly.

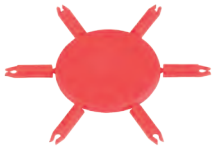

Coding Star CS2-5.0/5.08-RED
Article Number: 50000000024
The tongues of the coding star are inserted into the coding slits of the PCB terminal block to prevent the PCB multi-connector from being plugged in incorrectly.



Coding Star CS3-5.0/5.08-RED
Article Number: 50000000025
The tongues of the coding star are inserted into the coding slits of the PCB terminal block to prevent the PCB multi-connector from being plugged in incorrectly.



Coding Star CS4-5.0/5.08-RED
Article Number: 50000000026
The tongues of the coding star are inserted into the coding slits of the PCB terminal block to prevent the PCB multi-connector from being plugged in incorrectly.



Coding Star CS2-5.0/5.08-LIGHT GREY-HT
Article Number: 50000000028
The tongues of the reflowable coding star are inserted into the coding slits to prevent the PCB multi-connector from being plugged in incorrectly. This coding star is usable in reflow soldering processes.



Series AK(Z)950/ AK(Z)960 with Separating Element
Article Number: 5990950....
Art.-Nr.: 5990960....
The AK(Z)950/ AK(Z)960 is split into several areas with the separating element.



Series AK(Z)1100 / AK(Z)1110 with Separating Element
Article Number: 5991100....
Article Number: 5991110....
The AK(Z)1100/ AK(Z)1110 is split into several areas with the separating element.

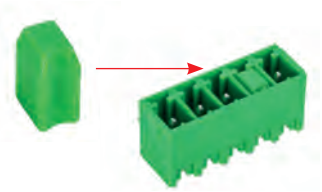

Separating Element SE-STL1550-GREEN
Article Number: 51550000002
A pin strip of series 1550, 1570 and 1590 can be split into several areas for various PCB terminal blocks with the separating element.

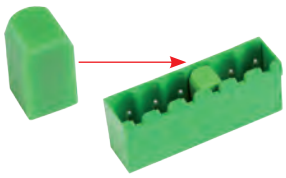

Separating Element SE-STL950-GREEN
Article Number: 50950000002
A pin strip of series 950, 970, 975 and 990 can be split into several areas for various PCB terminal blocks with the separating element.

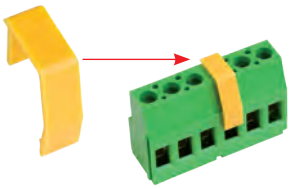

Screw Cover SC-AK700-YELLOW
Article Number: 50700000004
Use to cover the screws once the wires have been attached.



Coding Cover CC-AK1350-GREY
Article Number: 51350000000
Is clipped onto the plug from above/on the same side as the screw. The coding cover prevents the AK1350 from being placed on the pin strip 180° off.

L'IMPULSION Retrouvez nous sur www.limpulsion.fr

Accessories



Series AK1350 with pull reliefs
Article Number: on request
The pull relief makes it easier to unplug terminal blocks from pin strips. They comprise the contact face and mounting surface for connected wires and help to reduce mechanical stress exerted on clamping points resulting from long wires, etc.



Series AK(Z)1550 with pull reliefs
Article Number: on request
The pull relief makes it easier to unplug terminal blocks from pin strips. They comprise the contact face and mounting surface for connected wires and help to reduce mechanical stress exerted on clamping points resulting from long wires, etc.



Series AK(Z)1700/ AK(Z)1710 with pull reliefs
Article Number: on request
The pull relief makes it easier to unplug terminal blocks from pin strips. They comprise the contact face and mounting surface for connected wires and help to reduce mechanical stress exerted on clamping points resulting from long wires, etc.



Series AK(Z)950/ AK(Z)960 with pull reliefs
Article Number: on request
The pull relief makes it easier to unplug terminal blocks from pin strips. They comprise the contact face and mounting surface for connected wires and help to reduce mechanical stress exerted on clamping points resulting from long wires, etc.



Series AK(Z)1100/ AK(Z)1110 mit Zuglasche
Article Number: on request
The pull relief makes it easier to unplug terminal blocks from pin strips. They comprise the contact face and mounting surface for connected wires and help to reduce mechanical stress exerted on clamping points resulting from long wires, etc.



Series AK(Z)1200 with pull reliefs
Article Number: on request
The pull relief makes it easier to unplug terminal blocks from pin strips. They comprise the contact face and mounting surface for connected wires and help to reduce mechanical stress exerted on clamping points resulting from long wires, etc.



Series AK4541 with pull reliefs
Article Number: on request
The pull relief makes it easier to unplug terminal blocks from pin strips. They comprise the contact face and mounting surface for connected wires and help to reduce mechanical stress exerted on clamping points resulting from long wires, etc.



Series AK(Z)4551 with pull reliefs
Article Number: on request
The pull relief makes it easier to unplug terminal blocks from pin strips. They comprise the contact face and mounting surface for connected wires and help to reduce mechanical stress exerted on clamping points resulting from long wires, etc.



Series AK(Z)4951 with pull reliefs
Article Number: on request
The pull relief makes it easier to unplug terminal blocks from pin strips. They comprise the contact face and mounting surface for connected wires and help to reduce mechanical stress exerted on clamping points resulting from long wires, etc.



Series AKZ1520 with pull reliefs
Article Number: on request
The pull relief makes it easier to unplug terminal blocks from pin strips. They comprise the contact face and mounting surface for connected wires and help to reduce mechanical stress exerted on clamping points resulting from long wires, etc.



Mounting Rail Clip CLP-AKZS950-TS15/TS35
Article Number: 50950000005
Is clipped in under the AKZS950. The mounting rail clip serves as an adapter for the corresponding mounting rail.



Mounting Rail Clip CLP-AKZS950-TS32/TS35
Article Number: 50950000006
Is clipped in under the AKZS950. The mounting rail clip serves as an adapter for the corresponding mounting rail.



Crimping Pliers PZU 6
Article Number: 491100.0
For the crimping of stranded and flexible wires with ferrules with and without plastic collar in wire sizes from 0.14 mm² to 6.0 mm².

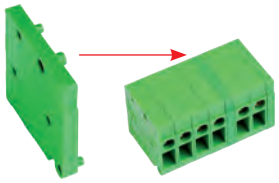

Spacer SPC-AK2200-GREEN
Article Number: 52200000002
To increase the spacing or to give visually better separation of the individual terminal sections.

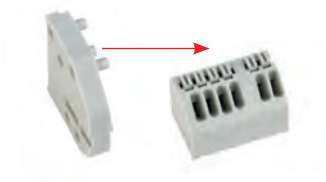

Spacer SPC-AK4191-PEBBLE GREY
Article Number: 54191000000
To increase the spacing or to give visually better separation of the individual terminal sections.

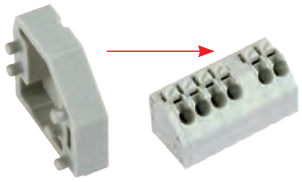

Spacer SPC-AK4291-PEBBLE GREY
Article Number: 54291000000
To increase the spacing or to give visually better separation of the individual terminal sections.

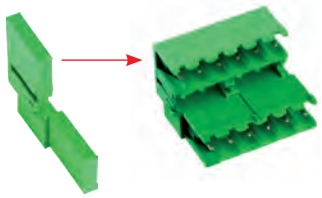

Side Wall and/or Separating Element SW/SE-STL970-GREEN
Article Number: 50970000000
This accessory combines both, side wall and separating element in one piece: Realization of a pin strip with closed ends ("/..G") and/ or separation of the individual terminal sections.

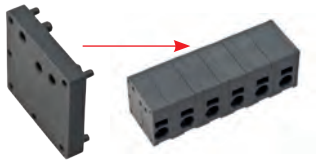

Spacer SPC-AK4200-baGY
Article Number: 54200000000
To increase the spacing or to give visually better separation of the individual terminal sections.

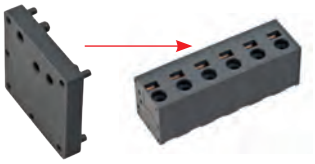

Spacer SPC-AK4200-baGY
Article Number: 54200000000
To increase the spacing or to give visually better separation of the individual terminal sections.

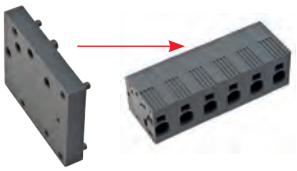

Spacer SPC-AK4210-H-baGY
Article Number: 54210000000
To increase the spacing or to give visually better separation of the individual terminal sections.

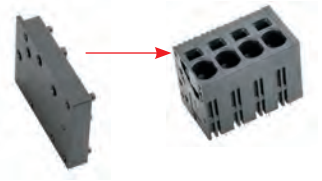

Spacer SPC-AK4210-V-baGY
Article Number: 54210000001
To increase the spacing or to give visually better separation of the individual terminal sections.



Side Wall with Coding Pin SW-AK4200-CP-H-baGY
Article Number: 54200000002
The sidewall with coding pin (SW-CP) ensures the right assembly of the PCB terminal block in the PCB. The coding pin thereby is inserted into the corresponding PCB hole. The SW-CP substitutes the standard side wall (SW).



Side Wall with Coding Pin SW-AK4200-CP-V-baGY
Article Number: 54200000001
The sidewall with coding pin (SW-CP) ensures the right assembly of the PCB terminal block in the PCB. The coding pin thereby is inserted into the corresponding PCB hole. The SW-CP substitutes the standard side wall (SW).

L'IMPULSION Retrouvez nous sur www.limpulsion.fr

Accessories

WIRE-END FERRULES WITH PLASTIC COLLARS

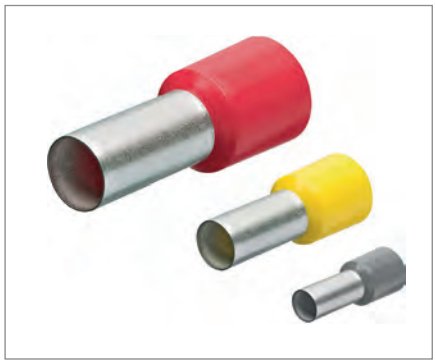

PTR HARTMANN ferrules with or without insulating collars provide the ideal solution when finely-stranded ends of conductors need to be protected if individual leads are frequently disconnected. The ferrules must be selected to match the wire size exactly (see table 1) and must be crimped gas-tight to the end of the conductor. Just deforming caused by the clamping force is insufficient! We recommend using PTR HARTMANN crimping pliers for easy and secure fitting of the ferrules. The resulting connections are electrically and mechanically perfect.
The requirements in respect of tests and application instructions for solder-free crimp connections are specified in **EN 60352-2:2014-04**.

WIRE SIZE		STRIPPED LENGTH	DIMENSIONS [mm]						PU
mm²	AWG	mm	L_1	L_2	d_1	S_1	d_2	S_2	
0.25	24	8	10	6	0.85	0.15	1.8	0.25	500
0.25	24	10	12	8	0.85	0.15	1.8	0.25	500
0.34	22	8	10	6	0.85	0.15	2.0	0.25	500
0.34	22	10	12	8	0.85	0.15	2.0	0.25	500
0.5	20	8	12	6	1.0	0.15	2.6	0.25	500
0.5	20	10	14	8	1.0	0.15	2.6	0.25	500
0.5	20	12	16	10	1.0	0.15	2.6	0.25	500
0.75	18	8	12	6	1.2	0.15	2.8	0.25	500
0.75	18	10	14	8	1.2	0.15	2.8	0.25	500
0.75	18	12	16	10	1.2	0.15	2.8	0.25	500
0.75	18	14	18	12	1.2	0.15	2.8	0.25	500
1.0	17	8	12	6	1.4	0.15	3.0	0.25	500
1.0	17	10	14	8	1.4	0.15	3.0	0.25	500
1.0	17	12	16	10	1.4	0.15	3.0	0.25	500
1.0	17	14	18	12	1.4	0.15	3.0	0.25	500
1.5	16	10	14	8	1.7	0.15	3.5	0.25	500
1.5	16	12	16	10	1.7	0.15	3.5	0.25	500
1.5	16	14	18	12	1.7	0.15	3.5	0.25	500
1.5	16	20	24	18	1.7	0.15	3.5	0.25	500
2.5	14	10	15	8	2.2	0.15	4.2	0.25	500
2.5	14	14	19	12	2.2	0.15	4.2	0.25	500
2.5	14	20	25	18	2.2	0.15	4.2	0.25	500
4.0	12	12	18	10	2.8	0.2	4.8	0.30	500
4.0	12	14	20	12	2.8	0.2	4.8	0.30	500
4.0	12	20	26	18	2.8	0.2	4.8	0.30	500
6.0	10	14	20	12	3.5	0.2	6.3	0.30	100
6.0	10	20	26	18	3.5	0.2	6.3	0.30	100
10.0	8	15	22	12	4.5	0.2	7.6	0.40	100
10.0	8	21	28	18	4.5	0.2	7.6	0.40	100

Tab. 1: Wire-End Ferrules with Plastic Collars - Dimensions Table

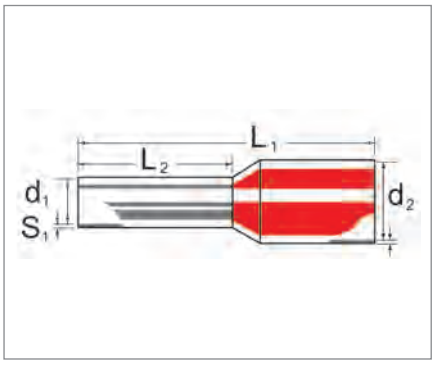

Wire-End Ferrules with Plastic Collars

Plastic Collar:

» Funnel feed-in made of polypropylene
» Heat resistant up to 120°C
» For wires from 0.5-10.0 mm²

Material:

» E-Cu
» Galvanically tin-plated

	TYPE	COLOUR	ARTICLE DESIGNATION	PU
	H 0.25/10 LB	LIGHT BLUE	492620.0	500
	H 0.25/12 LB	LIGHT BLUE	492621.0	500
	H 0.34/10 CY	TURQUOISE	492622.0	500
	H 0.34/12 CY	TURQUOISE	492623.0	500
	H 0.5/12 OG	ORANGE	492397.0	500
	H 0.5/14 OG	ORANGE	492201.0	500
	H 0.5/16 OG	ORANGE	493116.0	500
	H 0.75/12 WH	WHITE	492398.0	500
	H 0.75/14 WH	WHITE	492202.0	500
	H 0.75/16 WH	WHITE	493117.0	500
	H 0.75/18 WH	WHITE	493118.0	500
	H 1.0/12 YE	YELLOW	492399.0	500
	H 1.0/14 YE	YELLOW	492203.0	500
	H 1.0/16 YE	YELLOW	493119.0	500
	H 1.0/18 YE	YELLOW	493120.0	500
	H 1.5/14 RD	RED	492204.0	500
	H 1.5/16 RD	RED	492400.0	500
	H 1.5/18 RD	RED	492814.0	500
	H 1.5/24 RD	RED	492205.0	500
	H 2.5/15-D BU	BLUE	492845.0	500
	H 2.5/19-D BU	BLUE	492846.0	500
	H 2.5/25-D BU	BLUE	492847.0	500
	H 4.0/18-D GR	GREY	492848.0	500
	H 4.0/20-D GR	GREY	492849.0	500
	H 4.0/26-D GR	GREY	492850.0	500
	H 6.0/20 BK	BLACK	492210.0	100
	H 6.0/26 BK	BLACK	492211.0	100
	H 10.0/22 IV	IVORY	492212.0	100
	H 10.0/28 IV	IVORY	492213.0	100

Tab. 2: Wire-End Ferrules with Plastic Collars - PTR HARTMANN Standard

	TYPE	COLOUR	ARTICLE DESIGNATION	PU
	H 0.5/12-D WH	WHITE	492863.0	500
	H 0.5/14-D WH	WHITE	492864.0	500
	H 0.5/16-D WH	WHITE	492865.0	500
	H 0.75/12-D GR	GREY	492866.0	500
	H 0.75/14-D GR	GREY	492867.0	500
	H 0.75/16-D GR	GREY	492868.0	500
	H 0.75/18-D GR	GREY	492869.0	500
	H 1.0/12-D RD	RED	492870.0	500
	H 1.0/14-D RD	RED	492871.0	500
	H 1.0/16-D RD	RED	492872.0	500
	H 1.0/18-D RD	RED	492840.0	500
	H 1.5/14-D BK	BLACK	492841.0	500
	H 1.5/16-D BK	BLACK	492842.0	500
	H 1.5/18-D BK	BLACK	492843.0	500
	H 1.5/24-D BK	BLACK	492844.0	500
	H 2.5/14-D BU	BLUE	492845.0	500
	H 2.5/18-D BU	BLUE	492846.0	500
	H 2.5/24-D BU	BLUE	492847.0	500
	H 4.0/18-D GR	GREY	492848.0	500
	H 4.0/20-D GR	GREY	492849.0	500
	H 4.0/26-D GR	GREY	492850.0	500
	H 6.0/20-D YE	YELLOW	492851.0	100
	H 6.0/26-D YE	YELLOW	492852.0	100
	H 10.0/22-D RD	RED	492853.0	100
	H 10.0/28-D RD	RED	492854.0	100

Tab. 3: Wire-End Ferrules with Plastic Collars - DIN Norm

L'IMPULSION Retrouvez nous sur www.limpulsion.fr

TECHNICAL ANNEX

All PCB terminal blocks, PCB multi-connectors and interface pin blocks conform to the specifications of legal approvals, standards and regulations.

Adherence to international legislation, standards and rules is a matter of course for PTR HARTMANN GmbH and is reflected in the company's high-quality products, which conform to all German, European and international quality standards.
The fundamental precondition for this is PTR HARTMANN GmbH's certification in conformity to

» DIN EN ISO 9001:2015

L'IMPULSION | Retrouvez nous sur www.limpulsion.fr



L'IMPULSION Retrouvez nous sur www.limpulsion.fr

Environment | Household Appliance

RESPONSIBILITY TOWARDS THE ENVIRONMENT AND MANKIND



2011/65/EU – „RoHS2"

Directive of the EuropeanParliament and of the Council on the Restriction of the Use of Certain Hazardous Substances in Electrical and Electronic Equipment (recast)

(EU) 2015/863 – „RoHS2" Complement

COMMISSION DELEGATED DIRECTIVE amending Annex II to Directive 2011/65/EU of the European Parliament and of the Council as regards the list of restricted substances.

(EG) 1907/2006 - „REACH"

Regulation of the European Parliament and of the Council of 18 December 2006 concerning the Registration, Evaluation, Authorisation and Restriction of Chemicals (REACH), establishing a European Chemicals Agency, amending Directive 1999/45/EC and repealing Council Regulation (EEC) No. 793/93 and Commission Regulation (EC) No. 1488/94 as well as Council Directive 76/769/EEC and Commission Directives 91/155/EEC, 93/67/EEC, 93/105/EC and2000/21/EC (REACH) Directive)

PTR HARTMANN is very aware of its responsibilities towards the environment and mankind. This is why PTR HARTMANN has been certified since 1999 according to **DIN EN ISO 14001** (environmental management standard). New environmental targets are regularly defined, and conformity is confirmed in the annual TÜV audits. Since 2008, PTR HARTMANN has also defined its conformity with and pursuance of environmental goals according to EU directive **(EG) 1907/2006**, generally known as the REACH directive. In accordance with the EU RoHS directive, with whose current **RoHS2 2011/65/EU** (inclusive supplement directive **(EU) 2015/863**) version PTR HARTMANN also complies, this extends the goal of environmental friendliness to include the detailed maintenance of human health. This means that the following are excluded from new PTR HARTMANN products as early as the design phase: materials which are harmful to the environment, non-degradable, bioaccumulative, toxic, carcinogenic, mutagenic or toxic for reproduction.

A declaration of conformity regarding the latest state of the REACH and ROHS2 guideline can be viewed and downloaded as a PDF file at any time from the PTR HARTMANN website at **www.ptr-hartmann.com**.
In the same way, PTR HARTMANN automatically and immediately checks new environmental and health guidelines for conformity, issues the appropriate declarations of conformity, and adapts products when necessary to ensure conformity.

HOUSEHOLD APPLIANCE



The **IEC 60335-1** claims for a better resistance of household and similar electrical appliances against heat and fire amongst others the compliance with harder glow wire tests. Due to these tests are not part of the standard terminal blocks certification, PTR HARTMANN offers its PCB terminal blocks and pin strips with special insulating materials which are optimized to this household norm.
Further questions regarding to **IEC 60335-1** in our products can be answered when contacting PTR HARTMANN's sales department.
www.ptr-hartmann.com/contact/back-office/connection-technology/

Approvals and Standards

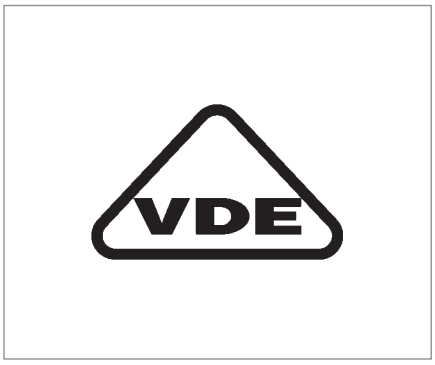

Our PCB terminal blocks and PCB multi-connectors comply with the current versions of all applicable standards and regulations. The following standards apply to VDE approval:

1. Screwable and screwless PCB terminal blocks

» EN 60998-1
» EN 60998-2-1
» EN 60998-2-2

2. Screwable and screwless PCB terminal blocks

» EN 60947-7-4

3. Screwable and screwless PCB multi-connectors

» EN 61984.

In addition, **EN 60664-1 / VDE 0110-1** are the cornerstones of insulation coordination for equipment used in low-voltage installations. This applies to all equipment that is rated for use up to 2.000 metres above sea level. Above 2.000 metres above sea level, height correction factors come into play.

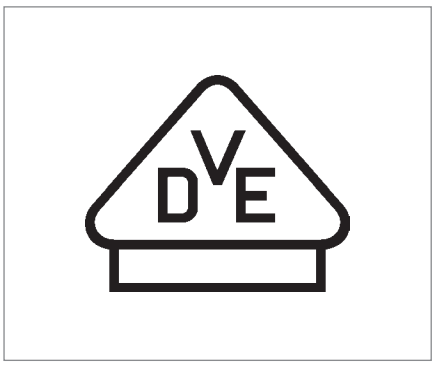

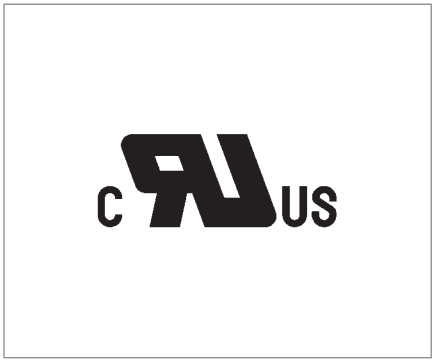

cURus approval of PTR HARTMANN PCB terminal blocks, PCB multi-connectors and interface pin blocks is based on the standards

» UL 1059
» UL 1977
» CSA 22.2 No. 158

The cURus mark indicates that our products meet Canadian and U.S. safety standards.

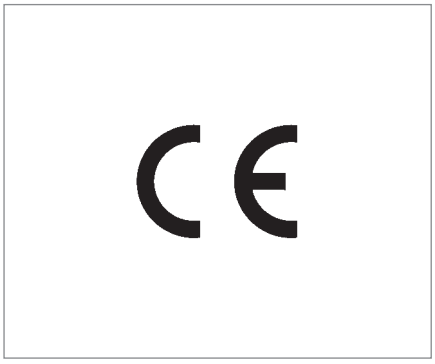

The CE mark, which is a European product safety mark for specific types of products, was created mainly to provide EU consumers with safe products. The CE mark is the manufacturer's
assurance that the product bearing the mark complies with European directives. A product may only be placed on the market in the EU if it meets the requirements of the applicable EU directives, and if it has undergone a conformance procedure in accordance with the applicable EU directives.
The CE mark on PTR HARTMANN's products indicates that they comply with the following EU directive:

» 2014/35/EG - certain voltage limits
» 2011/65/EU - ROHS2 directive
» (EG) 1907/2006 - REACH directive

L'IMPULSION Retrouvez nous sur www.limpulsion.fr

Rated Wire Sizes and Connectable Wire Sizes

Specific wire sizes are approved for PCB terminal blocks in relation to their current-carrying capacity – the higher the approved rated current, the higher the maximum permissible rated wire size. Testing institutes only accept "unprepared stripped wires" for PCB terminal block approval purposes. If necessary, stranded wires can first be drilled for easier insertion into the PCB terminal block.

Approval can be granted for the use of stranded wires with ferrules in connection with the approval of the relevant terminal devices or if approved by **EN 60947-7-4**.

The rated values for each PCB terminal block are indicated in the "Ratings" table of the relevant PTR HARTMANN product page.
The "Wire sizes" table lists the permitted wire sizes, including when stranded wires with ferrules are used.

Relationship between maximum Cross-Section and maximum Connecting Capacity of PCB Terminal Blocks			
max. Wire Size		Connecting Capacity	
mm²	AWG	mm²	AWG
0.05	30	0.05	30
0.08	28	0.05 - 0.08	30 - 28
0.14	26	0.05 - 0.08 - 0.14	30 - 28 - 26
0.20	24	0.08 - 0.14 - 0.20	28 - 26 - 24
0.34	22	0.14 - 0.20 - 0.34	26 - 24 - 22
0.50	20	0.20 - 0.34 - 0.50	24 - 22 - 20
0,75	18	0.34 - 0.50 - 0.75	22 - 20 - 18
1.00	-	0.50 - 0.75 - 1.00	-
1.50	16	0.75 - 1.00 - 1.50	20 - 18 - 16
2.50	14	1.00 - 1.50 - 2.50	18 - 16 - 14
4.00	12	1.50 - 2.50 - 4.00	16 - 14 - 12
6.00	10	2.50 - 4.00 - 6.00	14 - 12 - 10
10.00	8	4.00 - 6.00 - 10.0	12 - 10 - 8
16.00	6	6.00 - 10.0 - 16.0	10 - 8 - 6

Tab. 2: Table 2 EN 60947-7-4

Conversion Table - American Wire Gauge (AWG) to mm²						
AWG			mm²			
AWG	Wire Diameter [mm]		Wire Diameter [mm]			Wire Size [mm²]
	SOLID	STRANDED	SOLID	STRANDED	FLEXIBLE	
(30)	-	-	0.25	-	0.36	(0.05)
28	-	-	0.32	-	0.38	0.08
26	-	-	0.40	-	0.48	0.14
24	0.54	0.64	0.51	0.53	0.61	0.20
22	0.68	0.80	0.63	0.66	0.80	0.34
20	0.85	1.02	0.90	1.10	1.10	0.50
18	1.07	1.28	1.00	1.20	1.30	0,75
(17)	-	-	1.20	1.40	1.50	1.00
16	1.35	1.60	-	-	-	(1.30)
(15)	-	-	1.50	1.70	1.80	1.50
14	1.71	2.08	-	-	-	(2.10)
(13)	-	-	1.90	2.20	2.30	2.50
12	2.15	2.70	-	-	-	(3.30)
(11)	-	-	2.40	2.70	2.90	4.00
10	2.72	3.36	-	-	-	(5.30)
(9)	-	-	2.90	3.30	3.90	6.00
8	3.34	4.32	-	-	-	(8.30)
(7)	-	-	3.70	4.20	5.10	10.00
6	4.32	5.73	-	-	-	(13.30)
(5)	-	-	4.60	5.30	6.30	16.00

Tab. 1: Table 1 according to EN 60999-1

Overvoltage Categories I - IV

(in accordance with EN 60664-1:2007 / VDE 0110-1)

The concept of overvoltage categories is used for equipment energized directly from the low-voltage mains. A similar concept can also be used for equipment connected to other systems, for example telecommunication and data systems.

Equipment of Overvoltage Category I
is equipment for connection to circuits in which measures are taken to limit transient overvoltages[1] to an appropriately low level. These measures shall ensure that the temporary overvoltages that could occur are sufficiently limited so that their peak value does not exceed the relevant rated impulse voltage of the following table "Rated impulse voltage for equipment…"

Application:

» Equipment containing electronic circuits protected to this level. Unless the circuits are designed to take the temporary overvoltages into account, equipment of overvoltage category I cannot be directly connected to the supply mains.

Equipment of Overvoltage Category II
is energy-consuming equipment to be supplied from the fixed installation.

Application:

» Appliances, portable tools and other household and similar loads. If such equipment is subjected to special requirements with regard to reliability and availability, overvoltage category III applies.

Equipment of Overvoltage Category III
is equipment in fixed installations and for cases where the reliability and the availability of the equipment are subject to special requirements.

Application:

» Switches in the fixed installation and equipment for industrial use with permanent connection to the fixed installation.

Equipment of Overvoltage Category IV
is for use at the origin of the installation.

Application:

» Electricity meters and primary overcurrent protection equipment.

PTR HARTMANN product-approval data is based on Overvoltage Category III. Our sales staff will be pleased to provide you with the voltages for other overvoltage categories / degrees of pollution (III/2 and II/2) in accordance with **EN 60664**, Part 1.

[1]short duration overvoltage of a few milliseconds or less, usually highly damped

L'IMPULSION Retrouvez nous sur www.limpulsion.fr

Pollution Degrees 1 up to 4/ Insulation Material Groups

(in accordance with EN 60664-1:2007 / VDE 0110-1)

ATTENTION: PTR HARTMANN's approval data are based on pollution degree 3 at the approvals according to VDE sign.

POLLUTION DEGREES 1 UP TO 4

The environment determines the effect of pollution on the insulation.
Small clearances can be bridged completely by solid particles, dust and water and therefore minimum clearances are specified, where pollution may be present in the micro-environment. For the purpose of evaluating creepage distances and clearances, the following four degrees of pollution in the micro-environment are established.

Pollution degree 1

No pollution or only dry, non-conductive pollution occurs. The pollution has no influence.

Pollution degree 2

Only non-conductive pollution occurs except that occasionally a temporary conductivity caused by condensation is to be expected.

Pollution degree 3

Conductive pollution occurs or dry non-conductive pollution occurs which becomes conductive due to condensation which is to be expected.

Pollution degree 4

Continuous conductivity occurs due to conductive dust, rain or wet conditions.

The dimensions for creepage distance cannot be specified where permanently conductive pollution is present (Pollution degree 4). For temporarily conductive pollution (Pollution degree 3), the surface of the insulation may be designed to avoid a continuous path of conductive pollution, e.g. by means of ribs and grooves.

INSULATION MATERIAL GROUPS

For the purposes of standards **EN 60664-1:2007 / VDE 0110-1**, materials are classified into four groups according to their CTI values. These values are determined in accordance with **EN 60112** using solution A. The groups are as follows:

- Insulation materials group I $600 \leq CTI$
- Insulation materials group II $400 \leq CTI < 600$
- Insulation materials group IIIa $175 \leq CTI < 400$
- Insulation materials group IIIb $100 \leq CTI < 175$

The proof tracking index (PTI) is used to verify the tracking characteristics of materials. A material may be included in one of these four groups on the basis that the PTI is not less than the lower value specified for the group.

Clearance and Creepage Distances

(in accordance with EN 60664-1:2007 / VDE 0110-1)

Clearance is the shortest distance in air between two conductive parts. Clearance shall be dimensioned to withstand the required impulse withstand voltage, in accordance with table "Clearances to withstand transient overvoltages". For equipment directly connected to the low-voltage mains, the required impulse withstand voltage is the rated impulse voltage, and can be found in the table titled "Rated impulse voltage for equipment…," according to application.

Larger clearances may be required due to mechanical influences such as vibration or applied forces.

Inasmuch as the values indicated in the aforementioned tables are applicable up to 2.000 meters above sea level, clearance for greater heights must be calculated using the multiplication factors in the "Altitude correction factors" table.

Creepage distance means the shortest distance along the surface of a solid insulating material between two conductive parts. The values of table "Creepage distances to avoid failure due to tracking" are based upon existing data and are suitable for the majority of applications.

The basis for the determination of a creepage distance is the long-term r.m.s. value of the voltage existing across it. This voltage is the working voltage, the rated insulation voltage or the rated voltage.

The influence of the degrees of pollution in the micro-environment on the dimensioning of creepage distances is taken into account in table "Creepage distances to avoid failure due to tracking". Also keep in mind that different micro-environment conditions can exist within the same equipment.

A creepage distance cannot be less than the associated clearance so that the shortest creepage distance possible is equal to the required clearance. However, there is no physical relationship, other than this dimensional limitation, between the minimum clearance in air and the minimum acceptable creepage distance.

Determination of Clearance and Creepage Distances

PTR HARTMANN's terminals and connectors are approved according to the underlying **EN 60998-1** and **61984-1** standards. Specification of the rated voltages is on the basis of these standards.
In addition – as requested by many customers – operating voltages and/or clearance and creepage distances for operating voltages can be determined in accordance with the generally applicable **EN 60664-1**. For the clearance distances, the required nominal voltage and/or the rated surge voltage – whose definition takes place in accordance with table F.1 – are the decisive factor.

This is shown in table F.2 as a withstand/impulse voltage and – depending on the degree of soiling and field conditions – is used to determine the clearance.

For creepage, the rated voltage of the power supply system must be defined according to table F.3a for single-phase systems, or according to table F.3b for three-phase systems. In combination with the degree of soiling and the insulation material group, the voltage value specified in this way determines the minimum creepage distance according to table F.4.

For approval according to **EN 60947-7-4**, the minimum values for clearance and creepage distances are contained in **EN 60947-1** in table 13 (corresponds to table F.2) and table 15 (corresponds to table F.4).
Measurement of clearance and creepage distances is performed under the following conditions:

- The PCB terminal blocks must be fitted with the least favourable conductor type and cross-section in accordance with the manufacturer's information or must be examined without conductors, where this proves to be the least favourable case.
- The ends of the conductors must if necessary be stripped of insulation to the correct length in accordance with the manufacturer's information

The procedure for measuring the clearance and creepage distances is described in appendix G of **EN 60947-1**.

Corresponding tables see next pages.

L'IMPULSION
Retrouvez nous sur
www.limpulsion.fr

Norm Tables

RATED IMPULSE VOLTAGE FOR EQUIPMENT ENERGIZED DIRECTLY FROM THE LOW-VOLTAGE MAINS (TABLE F.1)						
Nominal voltage of the supply system based on IEC 50038		Voltage line to neutral derived from nominal voltages a.c. or d.c. up to and including	Rated impulse voltage Overvoltage category			
THREE PHASE [V]	SINGLE PHASE [V]	[V]	I [V]	II [V]	III [V]	IV [V]
		50	330	500	800	1.500
		100	500	800	1500	2.500
	120-240	150	800	1.500	2.500	4.000
230/400 277/480		300	1.500	2.500	4.000	6.000
400/690		600	2.500	4.000	6.000	8.000
1000		1.000	4.000	6.000	8.000	12.000

CLEARANCES TO WITHSTAND TRANSIENT OVERVOLTAGES (TABLE F.2)						
Required impulse withstand voltage	Minimum clearances in air up to 2000 m above sea level					
	Case A Inhomogeneous field			Case B Homogeneous field		
	POLLUTION DEGREE			POLLUTION DEGREE		
[kV]	1 [mm]	2 [mm]	3 [mm]	1 [mm]	2 [mm]	3 [mm]
0.33	0.01	0.2	0.8	0.01	0.2	0.8
0.40	0.02			0.02		
0.50	0.04			0.04		
0.60	0.06			0.06		
0.80	0.10			0.10		
1.0	0.15			0.15		
1.2	0.25	0.25		0.2		
1.5	0.5	0.5		0.3	0.3	
2.0	1.0	1.0	1.0	0.45	0.45	
2.5	1.5	1.5	1.5	0.60	0.60	
3.0	2.0	2.0	2.0	0.80	0.80	
4.0	3.0	3.0	3.0	1.2	1.2	1.2
5.0	4.0	4.0	4.0	1.5	1.5	1.5
6.0	5.5	5.5	5.5	2.0	2.0	2.0
8.0	8.0	8.0	8.0	3.0	3.0	3.0
10.0	11.0	11	11	3.5	3.5	3.5
12.0	14.0	14	14	4.5	4.5	4.5
15.0	18.0	18	18	5.5	5.5	5.5
20.0	25.0	25	25	8.0	8.0	8.0
25.0	33.0	33.0	33.0	10.0	10.0	10
30.0	40.0	40.0	40.0	12.5	12.5	12.5
40.0	60.0	60.0	60.0	17.0	17.0	17
50.0	75	75	75	22.0	22.0	22
60.0	90.0	90.0	90.0	27.0	27.0	27
80.0	130.0	130.0	130.0	35.0	35.0	35
100.0	170.0	170.0	170.0	45.0	45.0	45

ALTITUDE CORRECTION FACTORS		
ALTITUDE [m]	NORMAL BAROMETRIC PRESSURE [kPa]	MULTIPLICATION FACTOR FOR CLEARANCESN
2.000	80.0	1.00
3.000	70.0	1.14
4.000	62.0	1.29
5.000	54.0	1.48
6.000	47.0	1.70
7.000	41.0	1.95
8.000	35.5	2.25
9.000	30.5	2.62
10.000	26.5	3.02
15.000	12.0	6.67
20.000	5.5	14.50

SINGLE-PHASE THREE OR TWO-WIRE AC OR DC SYSTEMS (TABLE F.3A)		
Nominal voltage of the supply system (Net) [V]	For insulation line-to-line All systems [V]	For insulation line-to-earth Three-wire systems mid-point earthed [V]
12,5	12,5	
24 / 25	25	
30	32	
42 / 48 / 50	50	
60	63	
30-60	63	32
100	100	
110 / 120	125	
150	160	
200	200	
100-200	200	100
220	250	
110-220 / 120-240	250	125
300	320	
220-440	500	250
600	630	
480-960	1 000	500
1000	1 000	

THREE-PHASE FOUR OR THREE-WIRE AC SYSTEMS (TABLE F.3B)			
Nominal voltage of the supply system (Net) [V]	For insulation line-to-line All Systems [V]	For insulation line-to-earth Three-phase four -wire systems neutral-earthed [V]	Three-phase -wire systems [V]
60	63	32	63
110 / 120 / 127	125	80	125
150	160	-	160
200	200		200
208	200	125	200
220 / 230 / 240	250	160	250
300	320	-	320
380 / 400 / 415	400	250	400
440	500	250	500
480 / 500	500	320	500
575	630	400	630
600	630	-	630
660 / 690	630	400	630
720 / 830	800	500	800
960	1 000	630	1 000
1 000	1000	-	1 000

CREEPAGE DISTANCES TO AVOID FAILURE DUE TO TRACKING (TABLE F.4)									
Voltage r.m.s.	Minimum creepage distances								
	Printed wiring material								
	POLLUTION DEGREE								
	1	2	1	2			3		
	All material groups [mm]	All material groups except IIIb [mm]	All material groups [mm]	Material group I [mm]	Material group II [mm]	Material group III [mm]	Material group I [mm]	Material group II [mm]	Material group III [mm]
10.0	0.025	0.040	0.080	0.400	0.400	0.400	1.000	1.000	1.000
12.5	0.025	0.040	0.090	0.420	0.420	0.420	1.050	1.050	1.050
16.0	0.025	0.040	0.100	0.450	0.450	0.450	1.100	1.100	1.100
20.0	0.025	0.040	0.110	0.480	0.480	0.480	1.200	1.200	1.200
25.0	0.025	0.040	0.125	0.500	0.500	0.500	1.250	1.250	1.250
32.0	0.025	0.040	0.14	0.53	0.53	0.53	1.30	1.30	1.30
40.0	0.025	0.040	0.16	0.56	0.80	1.10	1.40	1.60	1.80
50.0	0.025	0.040	0.18	0.60	0.85	1.20	1.50	1.70	1.90
63.0	0.040	0.063	0.20	0.63	0.90	1.25	1.60	1.80	2.00
80.0	0.063	0.100	0.22	0.67	0.95	1.30	1.70	1.90	2.10
100.0	0.100	0.160	0.25	0.71	1.00	1.40	1.80	2.00	2.20
125.0	0.160	0.250	0.28	0.75	1.05	1.50	1.90	2.10	2.40
160.0	0.250	0.400	0.32	0.80	1.10	1.60	2.00	2.20	2.50
200.0	0.400	0.630	0.42	1.00	1.40	2.00	2.50	2.80	3.20
250.0	0.560	1.000	0.56	1.25	1.80	2.50	3.20	3.60	4.00
320.0	0.75	1.60	0.75	1.60	2.20	3.20	4.00	4.50	5.00
400.0	1.0	2.0	1.0	2.0	2.8	4.0	5.0	5.6	6.3
500.0	1.3	2.5	1.3	2.5	3.6	5.0	6.3	7.1	8.0
630.0	1.8	3.2	1.8	3.2	4.5	6.3	8.0	9.0	10.0
800.0	2.4	4.0	2.4	4.0	5.6	8.0	10.0	11.0	12.5
1.000	3.2	5.0	3.2	5.0	7.1	10.0	12.5	14.0	16.0
1.250			4.2	6.3	9.0	12.5	16.0	18.0	20.0
1.600			5.6	8.0	11.0	16.0	20.0	22.0	25.0
2.000			7.5	10.0	14.0	20.0	25.0	28.0	32.0
2.500			10.0	12.5	18.0	25.0	32.0	36.0	40.0

L'IMPULSION Retrouvez nous sur www.limpulsion.fr

Current-Carrying Capacity | Tightening Torques for Terminal Screws

CURRENT-CARRYING CAPACITY

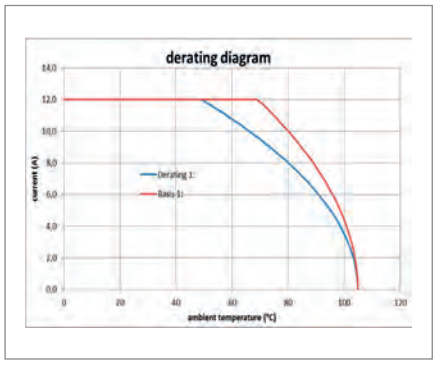

Current-carrying capacity indicates whether an electromechanical component such as a PTR HARTMANN PCB terminal block or PCB multi-connectors exhibits any functional anomalies or sustains any thermal damage under a specific rated current load and the relevant ambient temperature.

The component temperature should be measured as close as possible to the component that exhibits the highest temperature. It should also be considered that, when in operation, the PCB terminal blocks or PCB multi-connectors are affected by heat dissipation from nearby additional heat sources and/or heat conduction via the circuits. Unless otherwise indicated, the current values stated for PTR HARTMANN products refer to an ambient temperature of 60°C (T60).

The terminal block standard **EN 60998-1**, the multi-connector standard **EN 61984** and the **EN 60947-7-4** (Low-voltage switchgear and control-gear) contain various definitions in accordance with the upper temperature limit of insulation materials, which for PTR HARTMANN products is 105°C. For PCB multi-connectors PTR HARTMANN uses in this context derating curves (in accordance with **EN 60512-5-2** and **EN 60947-7-4**) to show on a basis of the maximum number of poles for the various wire sizes the performance of the current in correlation to the ambient temperature. The allowable operating range is determined using a reduction factor of 0.8 in respect to the value of the current in the basic curve.

TIGHTENING TORQUES FOR TERMINAL SCREWS



EN 60999-1 and **EN 60947-1** defines tightening torques for electrical fastening materials which ensure that the wiring of electrical terminals is safe (see Tab. 1). The PTR HARTMANN PCB terminal blocks and PCB multi-connectors of course completely fulfil this demands.

TIGHTENING TORQUES FOR PROVING MECHANICAL RESISTANCET FOR SCREW CONNECTIONS / SCREW TERMINAL BLOCKS				
Thread Diameter [mm]		Tightening Torque [Nm]		
Metric Standard	Diameter Range	I	II	III
1.6	≤ 1.6	0.05	0.10	0.10
2.0	> 1.6 up to 2.0	0.10	0.20	0.20
2.5	> 2.0 up to 2.8	0.20	0.40	0.40
3.0	> 2.8 up to 3.0	0.25	0.50	0.50
-	> 3.0 up to 3.2	0.30	0.60	0.60
3.5	> 3.2 up to 3.6	0.40	0.80	0.80
4.0	> 3.6 up to 4.1	0.70	1.20	1.20
4.5	> 4.1 up to 4.7	0.80	1.80	1.80
5.0	> 4.7 up to 5.3	0.80	2.00	2.00
6.0	> 5.3 up to 6.0	1.20	2.50	3.00
8.0	> 6.0 up to 8.0	2.50	3.50	6.00
10.0	> 8.0 up to 10.0	-	4.00	10.00
12.0	> 10.0 up to 12.0	-	-	14.00
14.0	> 12.0 up to 15.0	-	-	19.00
16.0	> 15.0 up to 20.0	-	-	25.00
20.0	> 20.0 up to 24.0	-	-	36.00
24.0	> 4.0	-	-	50.00

Tab. 1: Table 4 to EN 60947-1

L'IMPULSION | Retrouvez nous sur www.limpulsion.fr

Materials and Surfaces

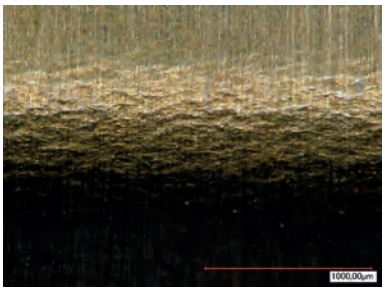

Metallic Materials

PTR HARTMANN PCB terminal blocks and PCB multi-connectors are made using only high quality metals. The use of various copper alloys, as well as bronze, stainless steel and specially surface-treated steel elements guarantees reliable contacts and minimizes corrosion.

Surface Coatings

Surface coatings on various metallic materials prevent corrosion and wear, and optimize conductivity. The surface coatings used by PTR HARTMANN comply with the EU's RoHS and WEEE directives.

Tinning

All of our copper electrical contacts are tinned as a matter of course. The tin surface of solder contacts creates an excellent bond with standard solder material.
A protective nickel barrier layer is applied prior to tinning to avoid any solderability loss by diffusion of the base material in the tin coating.

Gold Plating

Gold's excellent electrical properties make it an ideal surface coating for PCB multi-connectors that are used for low current and low voltage applications. Our gold plating thicknesses are 0.6-0.8 µm. Thinner or thicker gold plating is available by special order.

Plastic

PTR HARTMANN uses only insulating materials of tried and proven quality for insulation of live components – because PCB terminal blocks and PCB multi-connectors are required to meet very high standards when in service. For this reason, PTR HARTMANN uses for its insulating enclosures only PA6.6 and PPA polyamides, and PBT or LCP materials listed by the Underwriters Laboratories (UL). All insulating plastics conform inter alia to the maximum Classification V-0 fire-safety requirements of the UL 94 standard. In some cases, the materials used – and those for use in pin strips and reflow-soldered products, in particular – are glass-fibre-reinforced, in order to boost their mechanical strength and thermal stability.

L'IMPULSION Retrouvez nous sur www.limpulsion.fr

Products with Flanges | Tension Plates / Integrated Test Jacks

PRODUCTS WITH FLANGES

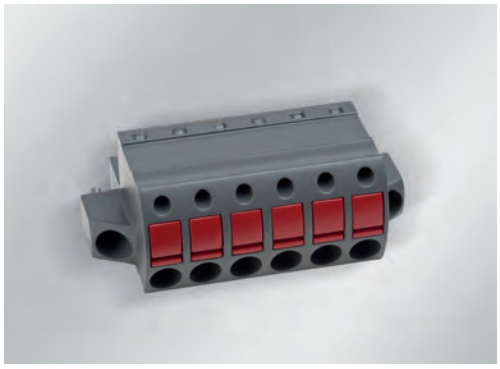

High-vibration applications call for additional measures to prevent PCB terminal blocks from coming loose from pin strips. Many PTR HARTMANN PCB multi-connectors integrate flanges, whereby screws are mounted on both sides of the PCB terminal block and screw sockets are mounted on both sides of the pin strip. Screwing these two elements together after the PCB terminal block is inserted in the pin strip guarantees that the PCB terminal block will remain in place
max. torque = 30.0 Ncm.

TENSION PLATES

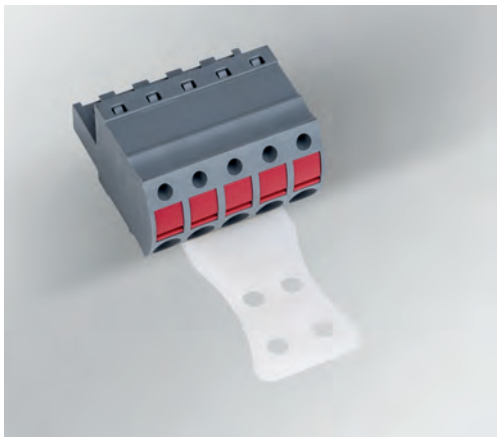

Tension plates make it easier to unplug PCB terminal blocks from pin strips. They comprise the contact face and mounting surface for connected wires and help to reduce mechanical stress exerted on clamping points resulting from long wires etc.

On the AK1350/..DSL, the tension plate also has the function of a disconnection aid.

INTEGRATED TEST JACKS



Many PTR HARTMANN products incorporate a test jack, which allows for (a) convenient realization of measurements for maintenance or troubleshooting purposes, without the need to remove wiring; and (b) continuous monitoring of process- related values.

Depending on the size of the test hole, readings can be taken using a PTR HARTMANN test probe or with a conventional meter.

Terminal Bridging | Coding

TERMINAL BRIDGING



PTR HARTMANN realizes terminal bridging in two different ways. External bridging is realized via the non-insulated (BR) or insulated (BRI) bridging elements that are used as accessories for various types of PCB terminal blocks and that are simply inserted into the wire entry, where they are fastened in place by a screw or spring.

We recommend the AK130-BR, AK350-BR or AK700-BR series for the realization of a potential across multiple poles. These three products integrate an internal conductive metal element that passes all the way through, which also allows for a wire connection in the clamp area.

CODING

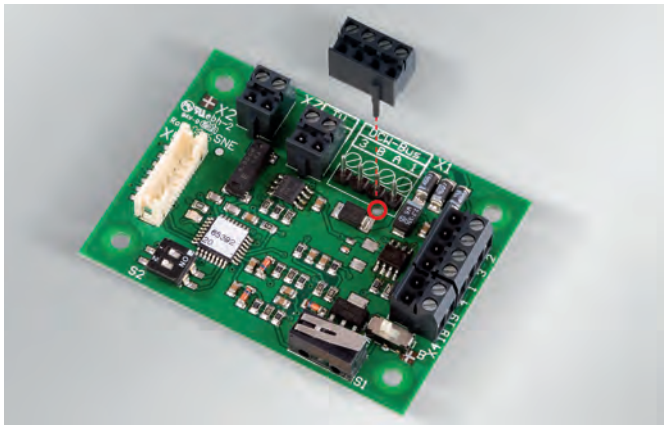

Fig 1

With PCB multi-connectors, plugging a PCB terminal block into the wrong pin strip will immediately result in a malfunction or even in destruction of the entire circuit board. This is why PTR HARTMANN has a very wide range of coding solutions for many of its PCB multi-connectors. The "-CP" coding pin's coding uses holes in the circuit board, and when they are correctly inserted, the PCB terminal block coding pins fit into these holes.(see fig 1).

Protection against incorrect plugging is possible in two ways using coding stars (CS accessory).

- If both connector parts – PCB terminal block and pin strip – are coded, a coded pole in the PCB terminal block must mate with an uncoded pole on the pin strip so that the terminal can be inserted (see fig 2).
- If a pole on the pin strip is coded, it must fit into a PCB terminal block pole whose coding nose has been removed so that the terminal can be connected (see fig 3).



Fig 2

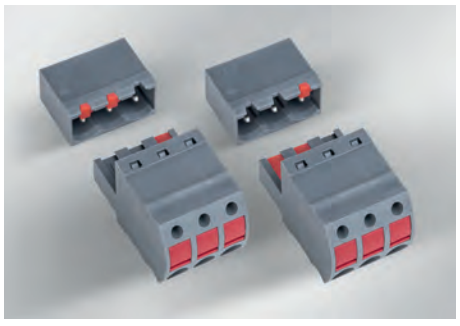



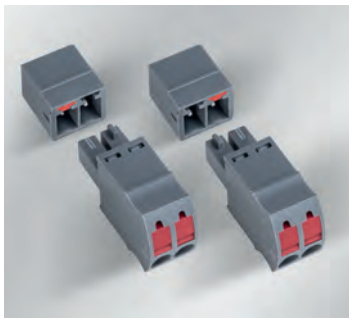

Fig 3

L'IMPULSION Retrouvez nous sur www.limpulsion.fr

Representations | PTR HARTMANN Worldwide

Overseas Representations Connection Technology

Australia

Active Components (Aust) Pty Ltd.
Po Box 784
Croydon, Victoria 3136
Phone 0061 3 977 54778
E-mail enquiries@activecomponents.com
www.activecomponents.com

Eaton Electric Systems Pty. Ltd
10 Kent Road Mascot,
NSW 2020
Phone 0061 2 9693 9333
Fax 0061 2 9667 3820
E-mail AustraliaSales@eaton.com
www.activecomponents.com

Austria

AVS Phoenix Mecano G.m.b.H.
Biróstraße 17
A - 1232 Wien
Phone 0043 1 6150 801
Fax 0043 1 6150 801130
E-mail info@avs-phoenix.at
www.avs-phoenix.at

Burisch Elektronik-Bauteile GmbH
Leopoldauer Strasse 29
A - 1210 Wien
Phone 0043 1 27 72 00
Fax 0043 1 27 72 06
E-mail info@burisch.net
www.burisch.net

Belarus

Arrow Electronics
Garmatna str 21/30
03067 Kiev
Phone 0038 0 44 45 64 72 60
Fax 0038 0 44 45 64 72 6
www.arrow.com

Belgium

Phoenix Mecano NV/SA
Karrewegstraat 124
B - 9800 Deinze
Phone 0032-92207050
Fax 0032-92207250
E-mail info.pmb@pmk.be
www.phoenix-mecano.be

APEM BENELUX
B - 1930 Zavente
Phone 0032-2 725 05 00
Fax 0032-2 725 22 00
E-mail sales@apem.be
www.apem.com

Brazil

DewertOkin do Brasil Ltda. Av.
Prof. Alceu Maynard Araujo, 185
BR-04726-160 São Paulo - SP
Phone 0055 11 564 341 90
E-mail vendas@phoenix-mecano.com.br
www.phoenix-mecano.com.br

Bulgaria

Comet Electronics
Mr. Ognyan Stoyanov
16, Tsar Samuil Str.
Sofia 1000
Phone 00359 2 915 58 00
Fax 00359 2 954 03 84
E-mail office@comet.bg
www.comet.bg

Czech Republic

Technik Partner s.r.o.
U Rybníka 149
CZ - 250 65 Boranovice
Phone 00420 283 851 781
Fax 00420 283 852 775
E-mail info@technikpartner.cz
www.technikpartner.cz

SEMIC Trade s.r.o.
Volutová 2521/18
158 00 Praha 5
Phone 00420 25 1625-331,-332
Fax 00420 1626-252
E-mail semic@semic.cz
www.semic.cz

Denmark

Eltech Solutions A/S
Hassellunden 14 - 16
DK - 2765 Smørum
Phone 0045 7010 1410
Fax 0045 3677 3088
E-mail info@eltechsolutions.dk
www.eltechsolutions.dk

Estonia

OEM Eesti OÜ
Aia 8
80010 Pärnu
Phone 00372 5295 114
E-mail info@oem.ee
www.oem.ee/

Finland

T & G Nordic OY
Hirsalantie 11
FIN - 02420 Jorvas
Phone 00358 20 793 9750
Fax 00358-20 793 9769
E-mail sales@tgnordic.fi
www.tgnordic.fi

OEM Finland Oy
Fiskarsinkatu 3
FIN - 20750 Turku
Phone 00358 207 499 323
Fax 00358 207 499 496
E-mail info@oemelectronics.fi
www.oemelectronics.fi

France

Phoenix Mecano S.a.r.L.
76, rue du Bois-Galon B.P. 3
F-94121 Fontenay-sous-Bois Cedex
Phone 0033 1 53 99 50 59
Fax 0033 1 53 99 50 79
E-mail info.ptr@phoenix-mecano.com
www.phoenixmecano.fr

Great Britain

Apem Components Ltd.
Drakes Drive
Long Crendon
Bucks.
GB - HP18 9BA
Phone 0044 1844202400
Fax 0044 1844202500
E-mail sales@apem.co.uk
www.apem.co.uk

Greece

G. Parpanelas S. A. - V.O.P. Cables
Protomagias str.
GR - 57009 Kalohori
Thessaloniki
Phone 0030 2310 754919
Fax 0030 2310 752411
E-mail info@vopcables.com
www.vopcables.com

Hungary

Phoenix Mecano Kecskemét Kft.
István király krt.24.
H-6000 Kecskemét
Phone 0036 76 515-500
Fax 0036 76 515-555
E-mail info@phoenix-mecano.hu
www.phoenix-mecano.hu

Burisch Hungary Kft.
Gárdonyi Géza u. 8
9200 Mosonmagyaróvár
Phone 0036 96 57 80 70
Fax 0036 96 57 80 77
E-mail info@burisch.net
www.burisch.net

India

Madhu Subtronic Components
PvT. Ltd.
1st Floor, Krishna Building,
Shamrao Vithal Marg,
Grand Road(E)
Mumbai – 400 007
Phone 0091 22 2386 4484
Fax 0091 22 2387 6729
E-mail cs@mscpl.com
www.mscpl.com

Indonesia

Phoenix Mecano S.E. Asia Pte Ltd
53 Ubi Ave 3, #04-01
Colourscan Building
Singapore 408863
Phone 0065 6749 1611
Fax 0065 6749 6766 / 674
E-mail pmsea@pmecano.com.sg
www.phoenixmecano.com.sg

Israel

A.M. Components
Hanofar 1
43662 Ra'anana
Phone 00972 -09-7783000
Fax 00972 -09-7458881
E-mail Sales@amcomp.co.il
www.amcomp.co.il

STG International LTD
53 Derech Hashalom st
53454 Givatayim
Phone 00972-3-7331400
Fax 00972-3-5732244
E-mail stg@stggroup.co.il
http://www.stggroup.co.il

Italy

FAST Elettronica Italiana S.p.A.
Via Rovetta, 35
I - 20127 Milano
Phone 0039 02 2610141
Fax 0039 02 2822287
E-mail sales@fastelettronica.com
www.fastelettronica.com

Representations | PTR HARTMANN Worldwide

Overseas Representations Connection Technology

Korea

Phoenix Mecano Korea Co., Ltd
2020 Ho, Daelim Acrotel, C-Dong,
Dogok-dong, 467-6,
Kangnam-Gu, Seoul
Phone 0082-2-2637-6922
Fax 0082-2-2637-6925
E-mail info@pmecano.co.kr
www.pmecano.co.kr

Phoenix Mecano Korea Co., Ltd
304, Kyungmu Building, 675-5,
Jeonpo-Dong, Jin-Gu, Busan
Phone 0082-51-517-6924
Fax 0082-51-517-6925
E-mail info@pmecano.co.kr
www.pmecano.co.kr

Lithuania

OEM AUTOMATIC UAB
Raudondvario pl. 101
47184 Kaunas
Phone 00370 64015 878
E-mail info@oem.lt
www.oem.ee

Luxemburg

APEM BENELUX
B - 1930 Zavente
Phone 0032 2 725 05 00
Fax 0032 2 725 22 00
E-mail sales@apem.be
www.apem.com

Malaysia

Phoenix Mecano S.E. Asia Pte Ltd
53 Ubi Ave 3, #04-01
Colourscan Building
Singapore 408863
Phone 0065 6749 1611
Fax 0065 6749 6766 / -674
E-mail pmsea@pmecano.com.sg
www.phoenixmecano.com.sg

Netherlands

Elincom electronics B. V.
Klaverbaan 101-103
NL-2908 KD Capelle aan den Ijssel
Phone 0031 10 26 40 270
Fax 0031 10 26 40 275
E-mail info@elincom.nl
www.elincom.nl

New Zealand

Active Components (NZ) Ltd
2/14 Canaveral Drive
Albany
0632 Auckland
Phone 0064 9 443 9500
Fax 0064 9 443 9502
E-mail
enquiries@activecomponents.com
www.activecomponents.com

Eaton Electric Systems Pty. Ltd
10 Kent Road Mascot,
NSW 2020
Phone 0061 2 9693 9333
Fax 0061 2 9667 3820
E-mail AustraliaSales@eaton.com
www.activecomponents.com

Norway

ELFA Distrelec AS
Rosenholmveien 25,
N - 1414 Trollåsen
Phone 0047 23124900
www.elfadistrelec.no

People's Republic of China

PTR HARTMANN (Shaoguan) Ltd.
No. 19 Le Yuan Road, Le Chang
Industrial Zone, Le Chang
Shao Guan, Guang Dong Province
Phone 0086 0751 5566636
E-mail info@ptr-hartmann.cn
www.ptr-hartmann.cn

Phillipines

Phoenix Mecano S.E. Asia Pte Ltd
53 Ubi Ave 3, #04-01
Colourscan Building
Singapore 408863
Phone 0065 6749 1611
Fax 0065 6749 6766 / -674
E-mail pmsea@pmecano.com.sg
www.phoenixmecano.com.sg

Poland

Jacenko Import Export
ul. Iganska 11
PL - 04-087 Warszawa
Phone 0048 22 8137493
Fax 0048 22 8137467
E-mail jacenko@jacenko.pl
www.jacenko.pl

Elhurt sp z o.o.
Galaktyczna 35 A
PL - 80-299 Gdansk
Phone 0048 585540800
Fax 0048 585540806
E-mail elhurt@elhurt.com.pl
www.elhurt.com.pl

APAR Biuro Handlowe
ul. Galczynskiego 6
PL - 05-090 Raszym
Phone 0048 22 853 49 30
Fax 0048 101 27 33
E-mail obudowy-zlacza@apar.pl
www.apar.pl

Romania

ECAS ELECTRO SRL
D.Pompei Nr. 8
Sector 2, Bd.
RO - 020337 Bucuresti
Phone 0040 21 204 81 00
Fax 0040 21 204 81 30
E-mail office@ecas.ro
www.ecas.ro

Russia

Representation Office Russia
Moscow
Phone 007 966 317-77-33
Mobil 007 906 796-06-06
E-mail
Alexey.Burkhanov@ptr-hartmann.com

Serbia

Comet Electronics d.o.o.
Mr. Zoran Petrovic
17, Arsenija Carnojevica Blvd.
11070 New Belgrad
Phone 00381 11 613 41 80
Fax 00381 11 311 39 42
E-mail office@comet.rs
www.comet.rs

Singapore

Phoenix Mecano S.E. Asia Pte Ltd
53 Ubi Ave 3, #04-01
Colourscan Building
Singapore 408863
Phone 0065 6749 1611
Fax 0065 6749 6766 / -674
E-mail pmsea@pmecano.com.sg
www.phoenixmecano.com.sg

Slovakia

Technik Partner s.r.o.
U Rybníka 149
CZ - 250 65 Boranovice
Phone 00420 283 851 781
Fax 00420 283 852 775
E-mail info@technikpartner.cz
www.technikpartner.cz

South Africa

WILTRON Agencies CC
Stand 66
9 Mount Noonmark Crescent
Midlands Estate
Midstream
South-Africa
1692
Phone 0027 12 940 9475
Fax 0027 86 684 7506
E-mail wiltron@global.co.za
www.wiltron-agencies.co.za

Spain

Sistemas Phoenix Mecano España, S.A.
C/ Tarento, Nº15
Plataforma Logística PLAZA
E - 15197 Zaragoza
Phone 0034 976 786 080
Fax 0034 976 787 088
E-mail info@phoenix-mecano.es
www.phoenix-mecano.es

Sweden

Bonab Elektronik AB
Aröds Industriväg 76
S - 42243 Hisings Backa
Phone 0046 31 724 24 24
Fax 0046 31 724 24 31
E-mail ptr@bonab.se
www.bonab.se

Modern Elteknik
Box 22100
S - 400 72 Gothenburg
Phone 0046 31 65 37 00
Fax 0046-31-22 99 63
E-mail info@modern-elteknik.se
www.modernelteknik.se

L'IMPULSION Retrouvez nous sur www.limpulsion.fr

Representations | PTR HARTMANN Worldwide

Overseas Representations Connection Technology

Sweden

OEM ELECTRONICS AB
Förrådsvägen 2
S - 57329 Tranas
Phone 0046 75 242 45 00
Fax 0046 75 242 45 09
E-mail info@oemelectronics.se
www.oemelectronics.se

Switzerland

Phoenix Mecano Komponenten AG
Hofwisenstr. 6
CH - 8260 Stein am Rhein
Phone 0041 52 742 7500
Fax 0041 52 742 7590
E-mail info@phoenix-mecano.ch
www.phoenix-mecano.ch

Taiwan

Phoenix Mecano S.E. Asia Pte Ltd - Branch Office
Rm.220, 2F., No.31, Sec.2, Nanchang Rd. Zhongzheng Dist.
Taipei City 100
Phone 00886 2 2725 2627
Fax 00886 2 2725 2575
E-mail pmtwn@pmecano.com.tw

Thailand

Phoenix Mecano Thailand Representative Office
B.B. Building, 54 Sukhumvit 21 (Asoke) Road,
8th Floor, Unit 3811, Klong Toey Nua, Wattana,
Bangkok 10110
Phone 0066 2 261 4175 / 261 4176
Fax 0066 2 261 4177
E-mail pmthai@pmecano.com.sg

Turkey

Entek Teknik A.S.
34775 Istanbul
Phone 0090 216 459 86 60
Fax 0090 216 459 83 70
E-mail pmthai@pmecano.com.sg

USA

Phoenix Mecano Inc.
7330 Executive Way
Frederick, MD 21704
Phone 001 301 696 9411
E-mail PMinfo@pm-usa.com
www.phoenixmecano.com

O.S.T.
On-Shore Technology, Inc.
1917 West 3rd Street
USA - Tempe / AZ 85281
Phone 001 480 921 30 00
Fax 001 480 968 4444
E-mail info@on-shore.com
www.on-shore.com

Altech Corporation
35 Royal Road
USA - Flemington / NY 08822-6000
Phone 001 908 806 9400
Fax 001 908 806 9490
E-mail info@altechcorp.com
www.altechcorp.com

Ukraine

Arrow Electronics
Garmatna str 21/30
03067 Kiev
Phone 0038 0 44 45 64 72 6
Fax 0038 0 44 45 64 72 6
www.arrow.com

Vietnam

Phoenix Mecano S.E. Asia Pte Ltd
53 Ubi Ave 3, #04-01
Colourscan Building
Singapore 408863
Phone 0065 6749 1611
Fax 0065 6749 6766 / -674
E-mail pmsea@pmecano.com.sg
www.phoenixmecano.com.sg

PTR HARTMANN – QUALITY DOWN TO THE TINIEST DETAIL



L'IMPULSION Retrouvez nous sur www.limpulsion.fr

Distributors | PTR HARTMANN Germany

Distributors on Stock

AL-Elektronik Distribution GmbH

Christian-Pommer-Straße 36
38112 Braunschweig
Phone 0049 531 25669-0
Fax 0049 531 25669-28
E-mail sales@al-elektronik.de
www.al-elektronik.de

Börsig GmbH

Siegmund-Loewe-Straße 5
74172 Neckarsulm
Phone 0049 7132 9393-0
Fax 0049 7132 9393-93
E-mail info@boersig.com
www.boersig.com

Bürklin GmbH & Co. KG

Grünwalder Weg 30
82041 Oberhaching
Phone 0049 89 55875-0
Fax 0049 89 55875-421
E-mail info@buerklin.de
www.buerklin.com

Conrad Electronic SE

Klaus-Conrad-Straße 1
92240 Hirschau
Phone 0049 9604 408787
E-mail kundenservice@conrad.de
www.conrad.de

Distrelec Schuricht GmbH

Lise-Meitner-Straße 4
28359 Bremen
Phone 0049 421 3654200
Fax 0049 421 3654236
E-mail verkauf@distrelec.de
www.distrelec.de

EVE GmbH

Hollefeldstr.16
48282 Emsdetten
Phone 0049 2572 9351-0
Fax 0049 2572 9351-24
E-mail info@eve.de
www.eve.de

Gudeco Elektronik Handelsgesellschaft mbH

Daimlerstraße 10
61267 Neu-Anspach
Phone 0049 6081 404-0
Fax 0049 6081 404-144
E-Mail info@gudeco.de
www.gudeco.de

pk components GmbH

Wilhelm-Maisel-Straße 26
90530 Wendelstein
Phone 0049 9129 4058-0
Fax 0049 9129 4058-259
E-Mail info@pk-components.de
www.pk-components.de

Schukat Electronic Vertriebs GmbH

Hans-Georg-Schukat-Straße 2
40789 Monheim am Rhein
Phone 0049 2173 950-5
Fax 0049 2173 950-999
E-mail info@schukat.com
www.schukat.com

Representations | PTR HARTMANN Germany

Germany Representative



PTR HARTMANN GmbH
Mario Graw
Phone 0049 172 8139721
mario.graw@ptr-hartmann.com



PTR HARTMANN GmbH
Lars Schlücker
Phone 0049 151 46190518
lars.schluecker@ptr-hartmann.com



PTR HARTMANN GmbH
Steffen Böhler
Phone 0049 151 15039955
steffen.boehler@ptr-hartmann.com



Thomas Lüllau Engineering Office
Am Fischteich 7B
21423 Winsen (Luhe)
Phone 0049 4171 7884-40
Fax 0049 4171 7884-41
tl@t-luellau.de
www.t-luellau.de



PTR HARTMANN GmbH
Jürgen Bierent
Phone 0049 171 4161469
juergen.bierent@ptr-hartmann.com



PTR HARTMANN GmbH
Stephan Leiminer
Tel. 0151 15039996
stephan.leiminer@ptr-hartmann.com



L'IMPULSION Retrouvez nous sur www.limpulsion.fr

Order Number Index

(Tape-on-Reel Products see page 370)

ORDER NUMBER INDEX	PAGE
50100..0121	34
50100..0150	37
50100..0190	51
50100..0240	54
50100..2121	36
50100..2150	39
50100..2190	53
50100..2240	56
50104..0070	40
50104..8801	61
50105..8803	62
50110..0070	48
50110..0100	49
50114..0070	50
50120..0110	35
50120..0130	38
50120..0170	55
50120..0150	52
50130..0001	174
50130..0021	179
50130..0045	175
50130..2001	176
50130..2021	180
50130..2051	176
50130..2071	180
50130..5001	252
50130..5021	327
50130..5031	253
50130..5051	252
50130..5061	328
50130..5071	327
50132..5001	255
50132..5021	329
50132..5031	256
50132..5051	330
50133..0001	177
50133..5001	258
50133..5031	259
50136..5001	260
50136..5031	261
50136..0001	178
50140..5001	264
50140..5101	265
50250..0001	66
50250..0021	98
50300..0041	67
50300..0141	67
50300..3341	68
50340..0061	70
50340..0071	71
50350..0001	72
50350..0005	72
50350..0017	75
50350..0021	99

ORDER NUMBER INDEX	PAGE
50350..0025	99
50350..0030	75
50350..0045	74
50350..0091	73
50350..0095	73
50350..0201	80
50350..0205	80
50350..0221	101
50350..0225	101
50350..0226	102
50350..0229	102
50350..0291	81
50350..0295	81
50350..0331	76
50350..0921	100
50350..0925	100
50350..0937	78
50360..0005	92
50360..0009	93
50360..0207	94
50360..0209	95
50370..0005	82
50370..0009	83
50500..0121	41
50500..0134	41
50500..0171	43
50500..0184	43
50500..0211	57
50500..0224	57
50500..0241	59
50500..0251	59
50500..3121	42
50500..3171	44
50500..3211	58
50500..3241	60
50550..0121	32
50550..0171	33
50550..0211	46
50550..0240	47
50590..0121	45
50601..0001	64
50601..0021	64
50602..0021	65
50692..0021	63
50700..0045	85
50700..0201	84
50700..0213	84
50700..0261	86
50700..0274	86
50710..0201	96
50710..0213	96
50750..0201	87
50750..0210	87
50770..0210	88

ORDER NUMBER INDEX	PAGE
50790..0201	89
50793..0201	90
50840..0201	91
50841..0201	97
50950..0001	189
50950..0009	190
50950..0021	189
50950..0029	190
50950..2001	191
50950..2009	192
50950..2021	191
50950..2029	192
50950..5001	292
50950..5009	295
50950..5011	286
50950..5019	289
50950..5021	292
50950..5029	295
50950..5031	286
50950..5039	289
50950..5101	273
50950..5109	276
50950..5111	267
50950..5119	270
50950..5121	273
50950..5129	276
50950..5131	267
50950..5139	270
50950..5317	287
50950..5319	290
50950..5327	293
50950..5329	296
50950..5337	287
50950..5339	290
50950..5347	293
50950..5349	296
50950..5367	274
50950..5368	277
50950..5377	268
50950..5379	271
50950..5387	274
50950..5388	277
50950..5389	271
50950..5397	268
50950..6001	298
50950..6019	301
50950..6021	298
50950..6039	301
50950..6101	279
50950..6109	282
50950..6121	279
50950..6129	282
50950..6327	299
50950..6329	302

Order Number Index

(Tape-on-Reel Products see page 370)

ORDER NUMBER INDEX	PAGE
50950..6347	299
50950..6349	302
50950..6367	280
50950..6379	283
50950..6387	280
50950..6389	283
50950..7021	201
50950..7022	202
50950..7028	194
50950..7041	203
50950..9021	304
50950..9121	285
50955..0001	193
50955..0021	193
50955..5061	305
50955..5071	306
50960..0021	204
50960..0029	205
50960..5021	323
50960..5029	324
50960..5031	321
50960..5039	322
50960..5121	319
50960..5129	320
50960..5131	317
50960..5139	318
50965..2021	206
50965..6021	326
50965..6121	325
50970..5021	310
50970..5031	308
50970..5121	309
50970..5131	307
50970..6021	312
50970..6121	311
50975..5001	314
50975..5101	313
50990..5121	316
50990..5131	315
51100..0001	196
51100..0021	195
51100..2001	197
51110..0001	199
51110..0021	198
51110..2001	200
51200..0001	207
51200..0021	207
51200..2001	208
51200..2021	208
51350..0001	172
51350..0121	173
51350..5001	221
51350..5010	225
51350..5031	222
51350..5101	226
51520..0025	187
51520..2025	188
51520..5025	250
51520..5125	248
51520..6025	251
51520..6125	249
51541..5001	246
51541..5101	244
51541..6001	247
51541..6101	245
51550..0001	181
51550..0025	181
51550..2001	182
51550..2025	182
51550..5001	233
51550..5025	233
51550..5101	227
51550..5125	227
51550..5333	234
51550..5334	234
51550..5336	228
51550..5343	228
51550..6001	236
51550..6025	236
51550..6101	230
51550..6125	230
51550..6333	231
51550..6334	237
51550..6336	231
51550..6343	237
51570..5021	240
51570..5121	239
51570..6021	242
51570..6121	241
51590..5121	243
51700..0001	183
51700..0021	183
51700..2001	184
51700..2021	184
51710..0001	185
51710..0021	185
51710..2001	186
51710..2021	186
52200..0001	103
52200..0021	105
52200..0041	107
52200..0051	104
52200..0071	106
52200..0091	108
53000..0001	151
53000..0041	166
53001..0001	152
53001..0021	153
53001..0041	167
53001..0051	154
53001..0061	168
53001..0071	169
53010..0001	162
53011..0001	163
53011..0021	135
53011..0071	136
53100..0001	155
53100..0003	156
53101..0001	157
53101..0021	158
53191..0001	149
53191..0321	150
53191..1001	150
53191..1321	149
53750..0201	161
53750..0203	159
53750..0210	161
53750..0213	159
53750..0241	160
53750..0251	160
53950..0001	220
54092..0001	135
54100..0001	130
54101..0001	131
54191..0001	109
54191..0051	110
54200..0421	132
54200..0451	133
54200..0521	141
54200..0551	142
54210..0407	146
54210..0521	143
54210..0523	147
54210..0527	144
54210..0551	145
54210..0651	148
54291..0001	113
54291..0021	114
54291..0051	115
54291..0061	116
54301..0421	134
54350..0001	209
54541..0401	210
54541..6401	211
54551..0401	212
54551..0421	212
54551..2401	213
54551..2421	213
54561..0401	214
54561..0421	214
54561..2401	215
54561..2421	215

L'IMPULSION Retrouvez nous sur www.limpulsion.fr

Order Number Index

Order Number Index Tape-on-Reel Products

Type Index

(Tape-on-Reel see page 373)

ORDER NUMBER INDEX	PAGE
54601..0301	117
54601..0302	122
54601..0351	119
54601..0352	124
54701..0421	127
54701..0422	128
54791..0421	111
54791..0422	112
54801..0301	138
54841..0361	139
54841..0371	140
54951..0401	216
54951..0421	216
54951..2401	217
54951..2421	217
54961..0421	218

INTERFACE PIN BLOCKS	
65322F3..65	334
65322F4..65	334
65322P3..65	335
65322P4..65	335
65322F1..65L	336
65322F2..65L	336
65322F1..65T	337
65322F2..65T	337
65458F1..64T	338
65458F2..64T	338
65457F2..104	339

ORDER NUMBER INDEX	PAGE
50130..5031R	254
50132..5031R	257
50136..5031R	262
50136..9031R	263
50190..5301R	266
50190..5302R	266
50190..5303R	266
50190..5304R	266
50300..3341R	69
50350..0331R	77
50350..0937R	79
50950..5317R	288
50950..5319R	291
50950..5327R	294
50950..5329R	297
50950..5337R	288
50950..5339R	291
50950..5347R	294
50950..5349R	297
50950..5367R	275
50950..5368R	278
50950..5377R	269
50950..5379R	272
50950..5387R	275
50950..5388R	278
50950..5389R	272
50950..5397R	269
50950..6327R	300
50950..6329R	303
50950..6347R	300
50950..6349R	303
50950..6367R	281
50950..6379R	284
50950..6387R	281
50950..6389R	284
51350..5031R	223
51350..9031R	224
51550..5333R	235
51550..5334R	235
51550..5336R	229
51550..5343R	229
51550..6333R	232
51550..6334R	238
51550..6336R	232
51550..6343R	238
54091..9001R	129
54092..0001R	136
54092..9001R	137
54601..0301R	118
54601..0302R	123
54601..0351R	120
54601..0352R	125
54601..9301R	121
54601..9302R	125

PRODUCT DESIGNATION	PAGE
AK100/..DS-5.0-H-GREY	37
AK100/..DS-5.0-H-GREY-BL	39
AK100/..DS-5.0-V-GREY	34
AK100/..DS-5.0-V-GREY-BL	36
AK100/..DS-10.0-H-GREY	54
AK100/..DS-10.0-H-GREY-BL	56
AK100/..DS-10.0-V-GREY	51
AK100/..DS-10.0-V-GREY-BL	53
AK104/..DS-5.0-V-GREY	40
AK110/..DS-7.5-H-GREY	49
AK110/..DS-7.5-V-GREY	48
AK114/..DS-7.5-V-GREY	50
AK130/..-5.0-GREY	174
AK130/..-5.0-GREY-BR	175
AK130/..-5.0-GREY-BL	176
AK130/..-10.0-GREY	179
AK130/..-10.0-GREY-BL	180
AK133/..DSLG-5.0-GREY	177
AK136/..DSLGB-5.0-GREY	178
AK300/..-5.0-GREY	67
AK300/..-5.0-P3.7-BK-BL-HT	68
AK340/..-5.0-OL-GREEN	70
AK340/..-5.0-OR-GREEN	71
AK350/..-5.0-H-GREEN	80
AK350/..-5.0-H-GREEN-HC	81
AK350/..-5.0-V-GREEN	72
AK350/..-5.0-V-GREEN-BR	74
AK350/..-5.0-V-GREEN-FP	75
AK350/..-5.0-V-GREEN-HC	73
AK350/..-10.0-H-GREEN	101
AK350/..-10.0-H-GREEN-HC	102
AK350/..-10.0-V-GREEN	99
AK350/..-10.0-V-GREEN-HC	100
AK360/..-7.5-H-GREEN	94
AK360/..-7.5-H-GREEN-HC	95
AK360/..-7.5-V-GREEN	92
AK360/..-7.5-V-GREEN-HC	93
AK370/..-5.0-V-GREEN	82
AK370/..-5.0-V-GREEN-HC	83
AK500/..DS-5.0-H-GREY	43
AK500/..DS-5.0-H-GREY-BL	44
AK500/..DS-5.0-V-GREY	41
AK500/..DS-5.0-V-GREY-BL	42
AK500/..DS-10.0-H-GREY	59
AK500/..DS-10.0-H-GREY-BL	60
AK500/..DS-10.0-V-GREY	57
AK500/..DS-10.0-V-GREY-BL	58
AK550/..DS-3.5-H-GREY	33
AK550/..DS-3.5-V-GREY	32
AK550/..DS-7.0-H-GREY	47
AK550/..DS-7.0-V-GREY	46
AK590/..DS-5.0-GREY	45
AK601/..-3.5-V-GREEN	64
AK700/..-5.0-H-GREEN	86

L'IMPULSION | Retrouvez nous sur www.limpulsion.fr

Type Index

(Tape-on-Reel see page 373)

PRODUCT DESIGNATION	PAGE
AK700/..-5.0-V-GREEN	84
AK700/..-5.0-V-GREEN-BR	85
AK710/..-7.5-V-GREEN	96
AK750/..-5.0-V-GREEN	87
AK790/..-5.0-V-GREEN	89
AK793/..-5.0-V-GREEN	90
AK950/..-5.0-GREEN	189
AK950/..-5.0-GREEN-HC	190
AK950/..F-5.0-GREEN	191
AK950/..F-5.0-GREEN-HC	192
AK955/..-5.0-GREEN	193
AK1100/..-5.0-GREEN	195
AK1110/..-5.0-GREEN	198
AK1200/..-5.0-GREEN	207
AK1200/..F-5.0-GREEN	208
AK1350/..DS-3.5-GREY	172
AK1350/..DS-3.5-GREY-CP	173
AK1550/..-3.5-GREEN	181
AK1550/..F-3.5-GREEN	182
AK1700/..-3.5-GREEN	183
AK1700/..F-3.5-GREEN	184
AK1710/..-3.5-GREEN	185
AK1710/..F-3.5-GREEN	186
AK2200/..-5.0-H-GREEN	104
AK2200/..-5.0-V-GREEN	103
AK2200/..-7.5-H-GREEN	106
AK2200/..-7.5-V-GREEN	105
AK2200/..-10.0-H-GREEN	108
AK2200/..-10.0-V-GREEN	107
AK3000/..-5.0-PEBBLE GREY	151
AK3000/..-10.0-PEBBLE GREY	166
AK3001/..FD-5.0-PEBBLE GREY	153
AK3001/..FD-10.0-PEBBLE GREY	168
AK3001/..KD-5.0-PEBBLE GREY	152
AK3001/..WD-5.0-PEBBLE GREY	154
AK3001/..KD-10.0-PEBBLE GREY	167
AK3001/..WD-10.0-PEBBLE GREY	169
AK3010/..-7.5-PEBBLE GREY	162
AK3011/..FD-7.5-PEBBLE GREY	164
AK3011/..KD-7.5-PEBBLE GREY	163
AK3011/..WD-7.5-PEBBLE GREY	165
AK3100/..-5.0-PEBBLE GREY	155
AK3100/..FD-5.0-PEBBLE GREY	156
AK3101/..KD-5.0-PEBBLE GREY	157
AK3101/..WD-5.0-PEBBLE GREY	158
AK3191/..-2.5-PEBBLE GREY	149
AK3191/..KD-2.5-PEBBLE GREY	150
AK3750/..-5.0-GREEN	159
AK3750/..-5.0-GREEN-PD10.0	160
AK3750/..VP-5.0-GREEN	161
AK3950/..-5.0-GREEN	220
AK4100/..-5.0-PEBBLE GREY	130
AK4101/..KD-5.0-PEBBLE GREY	131
AK4191/..KD-2.5-PEBBLE GREY	109
AK4191/..KDVP-2.5-PEBBLE GREY	110
AK4200/..-5.0-H-baGY	133
AK4200/..-5.0-V-baGY	132
AK4200/..-7.5-H-baGY	142
AK4200/..-7.5-V-baGY	141
AK4210/..-7.5-H-baGY	145
AK4210/..-7.5-V-baGY	143
AK4210/..VP-7.5-H-baGY	146
AK4210/..VP-7.5-V-baGY	144
AK4210/..-11.5-H-baGY	148
AK4210/..-11.5-V-baGY	147
AK4291/..KD-3.5-PEBBLE GREY	113
AK4291/..KD/1-3.5-PEBBLE GREY	114
AK4291/..KDVP-3.5-PEBBLE GREY	115
AK4291/..KDVP/1-3.5-PEBBLE GREY	116
AK4350/..G-3.5-GREEN	209
AK4541/..KD-3.5-BASALTGREY	210
AK4541/..FRKD-3.5-BASALTGREY	211
AK4551/..FKD-3.5-BASALTGREY	213
AK4551/..KD-3.5-BASALTGREY	212
AK4561/..FKD-3.5-BASALTGREY	215
AK4561/..KD-3.5-BASALTGREY	214
AK4601/..KD-3.5-V-P3.3-BK-HT	117
AK4601/..KDVP-3.5-V-P3.3-BK-HT	119
AK4601/..KD-3.5-H-P3.3-BK-HT	122
AK4601/..KDVP-3.5-H-P3.3-BK-HT	124
AK4951/..FKD-5.0-BASALTGREY	217
AK4951/..KD-5.0-BASALTGREY	216
AKZ120/..DS-5.08-H-GREY	38
AKZ120/..DS-5.08-V-GREY	35
AKZ120/..DS-10.16-H-GREY	55
AKZ120/..DS-10.16-V-GREY	52
AKZ130/..-5.08-GREY-BL	176
AKZ130/..-10.16-GREY-BL	180
AKZ250/..-5.08-V-GREEN	66
AKZ250/..-10.16-V-GREEN	98
AKZ300/..-5.08-GREY	67
AKZ350/..-5.08-H-GREEN	80
AKZ350/..-5.08-H-GREEN-HC	81
AKZ350/..-5.08-V-GREEN	72
AKZ350/..-5.08-V-GREEN-FP	75
AKZ350/..-5.08-V-GREEN-HC	73
AKZ350/..-5.08-V-P3.5-BK-HT	76
AKZ350/..-5.08-V-P3.5-BK-FP-HT	78
AKZ350/..-10.16-H-GREEN	101
AKZ350/..-10.16-H-GREEN-HC	102
AKZ350/..-10.16-V-GREEN	99
AKZ350/..-10.16-V-GREEN-HC	100
AKZ500/..DS-5.08-H-GREY	43
AKZ500/..DS-5.08-V-GREY	41
AKZ500/..DS-10.16-H-GREY	59
AKZ500/..DS-10.16-V-GREY	57
AKZ601/..-3.81-V-GREEN	64
AKZ602/..-3.81-V-GREEN	65
AKZ692/..-2.54-V-GREEN	63
AKZ700/..-5.08-H-GREEN	86
AKZ700/..-5.08-V-GREEN	84
AKZ710/..-7.62-V-GREEN	96
AKZ750/..-5.08-V-GREEN	87
AKZ770/..-5.08-V-GREEN	88
AKZ840/..-6.35-V-GREEN	91
AKZ841/..-9.52-V-GREEN	97
AKZ950/..-5.08-GREEN	189
AKZ950/..-5.08-GREEN-HC	190
AKZ950/..-5.08-GREEN-INV	194
AKZ950/..F-5.08-GREEN	191
AKZ950/..F-5.08-GREEN-HC	192
AKZ955/..-5.08-GREEN	193
AKZ960/..-7.62-GREEN	204
AKZ960/..G-7.62-GREEN-HC	205
AKZ965/..F-7.62-GREEN	206
AKZ1100/..-5.08-GREEN	196
AKZ1100/..F-5.08-GREEN	197
AKZ1110/..-5.08-GREEN	199
AKZ1110/..F-5.08-GREEN	200
AKZ1200/..-5.08-GREEN	207
AKZ1200/..F-5.08-GREEN	208
AKZ1520/..-5.08-GREEN	187
AKZ1520/..F-5.08-GREEN	188
AKZ1550/..-3.81-GREEN	181
AKZ1550/..F-3.81-GREEN	182
AKZ1700/..-3.81-GREEN	183
AKZ1700/..F-3.81-GREEN	184
AKZ1710/..-3.81-GREEN	185
AKZ1710/..F-3.81-GREEN	186
AKZ3191/..-2.54-ORANGE	149
AKZ3191/..KD-2.54-ORANGE	150
AKZ3750/..-5.08-GREEN	159
AKZ3750/..-5.08-GREEN-PD10.16	160
AKZ3750/..VP-5.08-GREEN	161
AK4092/..KD-6.0-P2.4-WH-HT	135
AKZ4301/..KD-5.08-BASALTGREY	134
AKZ4551/..FKD-3.81-BASALTGREY	213
AKZ4551/..KD-3.81-BASALTGREY	212
AKZ4561/..FKD-3.81-BASALTGREY	215
AKZ4561/..KD-3.81-BASALTGREY	214
AKZ4701/..KD-3.81-H-BASALTGREY	128
AKZ4701/..KD-3.81-V-BASALTGREY	127
AKZ4791/..KD-2.54-H-BASALTGREY	112
AKZ4791/..KD-2.54-V-BASALTGREY	111
AKZ4801/..KD-6.35-V-BLACK-HT	138
AKZ4841/..KD-6.35-OL-BLACK-HT	139
AKZ4841/..KD-6.35-OR-BLACK-HT	140
AKZ4951/..FKD-5.08-BASALTGREY	217
AKZ4951/..KD-5.08-BASALTGREY	216
AKZ4961/..FKD-7.62-BASALTGREY	219
AKZ4961/..KD-7.62-BASALTGREY	218
AKZS950/..F-5.08-GREEN	202

L'IMPULSION Retrouvez nous sur www.limpulsion.fr

Type Index

(Tape-on-Reel see page 373)

PRODUCT DESIGNATION	PAGE
AKZS950/..G-5.08-GREEN	201
AKZS950/..GMB-5.08-GREEN	203
EK104/..DS-V	61
EK105/..DS-V	62
STL130/..-5.0-V-BLACK	252
STL130/..-5.0-V-P3.5-BK-HT	253
STL130/..-10.0-V-BLACK	327
STL130/..-10.0-V-BLACK-HT	328
STL132/..-5.0-V-BLACK	255
STL132/..-5.0-V-P3.3-BK-HT	256
STL132/..-10.0-V-BLACK	329
STL132/..-10.0-V-BLACK-HT	330
STL133/..-5.0-V-BLACK	258
STL133/..-5.0-V-P3.5-BK-HT	259
STL136/..-5.0-V-BLACK	260
STL136/..-5.0-V-P3.5-BK-HT	261
STL140/..-5.0-H-BLACK	264
STL140/..-5.0-H-BLACK-HT	265
STL950/..-5.0-H-GREEN	286
STL950/..-5.0-H-P2.6-BK-HT	287
STL950/..-5.0-H-GREEN-HC	289
STL950/..-5.0-H-P2.6-BK-HC-HT	293
STL950/..-5.0-V-GREEN	267
STL950/..-5.0-V-P2.6-BK-HT	268
STL950/..-5.0-V-GREEN-HC	270
STL950/..-5.0-V-P2.6-BK-HC-HT	271
STL950/..F-5.0-H-GREEN	298
STL950/..F-5.0-H-P2.6-BK-HT	299
STL950/..F-5.0-H-GREEN-HC	301
STL950/..F-5.0-H-P2.6-BK-HC-HT	302
STL950/..F-5.0-V-GREEN	279
STL950/..F-5.0-V-P2.6-BK-HT	280
STL950/..F-5.0-V-GREEN-HC	282
STL950/..F-5.0-V-P2.6-BK-HC-HT	283
STL950/..G-5.0-H-GREEN	292
STL950/..G-5.0-H-P2.6-BK-HT	293
STL950/..G-5.0-H-GREEN-HC	295
STL950/..G-5.0-H-P2.6-BK-HC-HT	296
STL950/..G-5.0-V-GREEN	273
STL950/..G-5.0-V-P2.6-BK-HT	274
STL950/..G-5.0-V-GREEN-HC	276
STL950/..G-5.0-V-P2.6-BK-HC-HT	277
STL955/..-5.0-OL-GREEN	305
STL955/..-5.0-OR-GREEN	306
STL975/..G-5.0-H-GREEN	314
STL975/..G-5.0-V-GREEN	313
STL1350/..-3.5-H-BLACK	225
STL1350/..-3.5-V-BLACK	221
STL1350/..-3.5-H-P3.5-BK-HT	226
STL1350/..-3.5-V-P3.5-BK-HT	222
STLZ1520/..F-5.08-H-GREEN	251
STLZ1520/..G-5.08-H-GREEN	250
STLZ1520/..F-5.08-V-GREEN	249
STLZ1520/..G-5.08-V-GREEN	248

PRODUCT DESIGNATION	PAGE
STL1541/..FR-3.5-H-BASALTGREY	247
STL1541/..G-3.5-H-BASALTGREY	246
STL1541/..FR-3.5-V-BASALTGREY	245
STL1541/..G-3.5-V-BASALTGREY	244
STL1550/..F-3.5-H-GREEN	236
STL1550/..F-3.5-H-P2.6-BK-HT	237
STL1550/..F-3.5-V-GREEN	230
STL1550/..F-3.5-V-P2.6-BK-HT	231
STL1550/..G-3.5-H-GREEN	233
STL1550/..G-3.5-H-P2.6-BK-HT	234
STL1550/..G-3.5-V-GREEN	227
STL1550/..G-3.5-V-P2.6-BK-HT	228
STLZ130/..-5.08-V-BLACK	252
STLZ130/..-10.16-V-BLACK	327
STLZ950/..-5.08-H-GREEN-INV	304
STLZ950/..-5.08-H-GREEN	286
STLZ950/..-5.08-H-P2.6-BK-HT	287
STLZ950/..-5.08-H-GREEN-HC	289
STLZ950/..-5.08-H-P2.6-BK-HC-HT	290
STLZ950/..-5.08-V-GREEN-INV	285
STLZ950/..-5.08-V-GREEN	267
STLZ950/..-5.08-V-P2.6-BK-HT	268
STLZ950/..-5.08-V-GREEN-HC	270
STLZ950/..-5.08-V-P2.6-BK-HC-HT	271
STLZ950/..F-5.08-H-GREEN	298
STLZ950/..F-5.08-H-P2.6-BK-HT	299
STLZ950/..F-5.08-H-GREEN-HC	301
STLZ950/..F-5.08-H-P2.6-BK-HC-HT	302
STLZ950/..F-5.08-V-GREEN	279
STLZ950/..F-5.08-V-P2.6-BK-HT	280
STLZ950/..F-5.08-V-GREEN-HC	282
STLZ950/..F-5.08-V-P2.6-BK-HC-HT	283
STLZ950/..G-5.08-H-GREEN	292
STLZ950/..G-5.08-H-P2.6-BK-HT	293
STLZ950/..G-5.08-H-GREEN-HC	295
STLZ950/..G-5.08-H-P2.6-BK-HC-HT	296
STLZ950/..G-5.08-V-GREEN	273
STLZ950/..G-5.08-V-P2.6-BK-HT	274
STLZ950/..G-5.08-V-GREEN-HC	276
STLZ950/..G-5.08-V-P2.6-BK-HC-HT	277
STLZ960/..-7.62-H-GREEN	321
STLZ960/..-7.62-H-GREEN-HC	322
STLZ960/..-7.62-V-GREEN	317
STLZ960/..-7.62-V-GREEN-HC	318
STLZ960/..G-7.62-H-GREEN	323
STLZ960/..G-7.62-H-GREEN	324
STLZ960/..G-7.62-V-GREEN	319
STLZ960/..G-7.62-V-GREEN-HC	320
STLZ965/..F-7.62-H-GREEN	326
STLZ965/..F-7.62-V-GREEN	325
STLZ970/..-5.08-H-GREEN	308
STLZ970/..-5.08-V-GREEN	307
STLZ970/..F-5.08-H-GREEN	312
STLZ970/..F-5.08-V-GREEN	311

PRODUCT DESIGNATION	PAGE
STLZ970/..G-5.08-H-GREEN	310
STLZ970/..G-5.08-V-GREEN	309
STLZ990/..-5.08-GREEN	315
STLZ990/..G-5.08-GREEN	316
STLZ1550/..F-3.81-H-GREEN	236
STLZ1550/..F-3.81-H-P2.6-BK-HT	237
STLZ1550/..F-3.81-V-GREEN	230
STLZ1550/..F-3.81-V-P2.6-BK-HT	231
STLZ1550/..G-3.81-H-GREEN	233
STLZ1550/..G-3.81-H-P2.6-BK-HT	234
STLZ1550/..G-3.81-V-GREEN	227
STLZ1550/..G-3.81-V-P2.6-BK-HT	228
STLZ1570/..F-3.81-H-GREEN	242
STLZ1570/..F-3.81-V-GREEN	241
STLZ1570/..G-3.81-H-GREEN	240
STLZ1570/..G-3.81-V-GREEN	239
STLZ1590/..G-3.81-GREEN	243

INTERFACE PIN BLOCKS	
FKB Series 5322 - SMD	234
PKB Series 5322 - SMD	235
FKB Series 5322 - L01	236
FKB Series 5322 - T01	237
FKB Series 5322 - SMD	238
FKB Series 5322 - SMD	239

L'IMPULSION Retrouvez nous sur www.limpulsion.fr

Type Index
Tape-on-Reel Products

PRODUCT DESIGNATION	PAGE
AK300/..-5.0-P3.7-BK-BL-HT	69
AKZ350/..-5.08-V-P3.5-BK-HT	77
AKZ350/..-5.08-V-P3.5-BK-FP-HT	79
AK4091/..KD-4.0-WH-SMD	129
AK4092/..KD-6.0-P2.4-WH-HT	136
AK4092/..KD-6.0-WH-SMD	137
AK4601/..KD-3.5-H-BK-SMD	126
AK4601/..KD-3.5-H-P3.3-BK-HT	123
AK4601/..KD-3.5-V-BK-SMD	121
AK4601/..KD-3.5-V-P3.3-BK-HT	118
AK4601/..KDVP-3.5-H-P3.3-BK-HT	125
AK4601/..KDVP-3.5-V-P3.3-BK-HT	120
STL130/..-5.0-V-P3.5-BK-HT	254
STL132/..-5.0-V-P3.3-BK-HT	257
STL136/..-5.0-V-P3.5-BK-HT	262
STL136/..-5.0-V-BK-SMD	263
STL190/..-5.75-V-PT..-SMD	266
STL950/..-5.0-H-P2.6-BK-HT	288
STL950/..-5.0-H-P2.6-BK-HC-HT	291
STL950/..-5.0-V-P2.6-BK-HT	269
STL950/..-5.0-V-P2.6-BK-HC-HT	272
STL950/..F-5.0-H-P2.6-BK-HT	300
STL950/..F-5.0-H-P2.6-BK-HC-HT	303
STL950/..F-5.0-V-P2.6-BK-HT	281
STL950/..F-5.0-V-P2.6-BK-HC-HT	284
STL950/..G-5.0-H-P2.6-BK-HT	294
STL950/..G-5.0-H-P2.6-BK-HC-HT	297
STL950/..G-5.0-V-P2.6-BK-HT	275
STL950/..G-5.0-V-P2.6-BK-HC-HT	278
STL1350/..-3.5-V-P3.5-BK-HT	223
STL1350/..-3.5-V-PT9.0-BK-SMD	224
STL1550/..F-3.5-H-P2.6-BK-HT	238
STL1550/..G-3.5-H-P2.6-BK-HT	235
STL1550/..F-3.5-V-P2.6-BK-HT	232
STL1550/..G-3.5-V-P2.6-BK-HT	229
STLZ950/..-5.08-H-P2.6-BK-HT	288
STLZ950/..-5.08-H-P2.6-BK-HC-HT	291
STLZ950/..-5.08-V-P2.6-BK-HT	269
STLZ950/..-5.08-V-P2.6-BK-HC-HT	272
STLZ950/..F-5.08-H-P2.6-BK-HT	300
STLZ950/..F-5.08-H-P2.6-BK-HC-HT	303
STLZ950/..F-5.08-V-P2.6-BK-HT	281
STLZ950/..F-5.08-V-P2.6-BK-HC-HT	284
STLZ950/..G-5.08-H-P2.6-BK-HT	294
STLZ950/..G-5.08-H-P2.6-BK-HC-HT	297
STLZ950/..G-5.08-V-P2.6-BK-HT	275
STLZ950/..G-5.08-V-P2.6-BK-HC-HT	278
STLZ1550/..F-3.81-H-P2.6-BK-HT	238
STLZ1550/..G-3.81-H-P2.6-BK-HT	235
STLZ1550/..F-3.81-V-P2.6-BK-HT	232
STLZ1550/..G-3.81-V-P2.6-BK-HT	229

L'IMPULSION Retrouvez nous sur www.limpulsion.fr

Imprint

PTR HARTMANN GmbH
Gewerbehof 38
59368 Werne, Germany
Phone 0049 2389 7988-0
Fax 0049 2389 7988-88
E-Mail info@ptr-hartmann.com
www.ptr-hartmann.com

Design:
PTR HARTMANN GmbH
Databased-Publishing:
cybob communication GmbH
Creative Concept:
Christiane Luhmann
www.luhmannandfriends.com

Photos:
Tim Luhmann Fotografie & Film
iStockphoto.com
shutterstock.com

Print:
Bruns Druckwelt GmbH

Copyright:
PTR HARTMANN GmbH
subject to change, 02/2021

This catalogue replaces all earlier editions.

FSC® (Forest Stewardship Council®) | Climate neutral

FSC www.fsc.org
MIX
Paper from responsible sources
FSC® C010764

The promotion of an environmentally friendly, socially beneficial and economically viable management of forests — this is the Forest Stewardship Council®'s (FSC®) mission.
The FSC's logo must only be used in conjunction with wood products which come from sustainable forest use or which conserve the forest's resources.

In this way, the FSC and its system of certification actively support sustainability when it comes to dealing responsibly with our natural resources.

PTR HARTMANN GmbH supports this mission, and has printed this catalogue in accordance with the guidelines of the FSC directive.

Climate neutral

Climate neutral
Print product
ClimatePartner.com/11575-1809-1003

Carbon neutral printing means compensating for unavoidable carbon dioxide emissions by conserving them in other places when creating print media. The basis for this is an emissions balance which can be tracked in detail for the relevant print medium.
PTR HARTMANN's 2018 "Connection Technology" catalogue has been produced in accordance with this guideline.
The ID number can be used to track the emissions balance.

L'IMPULSION | Retrouvez nous sur www.limpulsion.fr

PTR HARTMANN

A Phoenix Mecano Company

A COMPANY IN THE PHOENIX MECANO GROUP

The Phoenix Mecano Group is a technological enterprise which operates around the world and is represented on the international growth markets. With its three building technology, mechanical components and ELCOM / EMS divisions, the company is the leader in many markets. Machinery and plant engineering, measurement and control technology, electrical engineering, automotive and rail engineering, energy technology, medical technology, aerospace technology, as well as the home and hospital care sector, are important fields of application.

GLOBAL PRESENCE

With 60 locations on every continent, we and our international workforce are close to our customers and guarantee efficient production, resource-friendly logistics and market-driven solutions.

PTR HARTMANN GmbH
Gewerbehof 38
59368 Werne, Germany
Phone +49 2389 7988-0
Fax +49 2389 7988-88
info@ptr-hartmann.com

www.ptr-hartmann.com