L'IMPULSION
Retrouvez nous sur
www.limpulsion.fr

PTR HARTMANN
A Phoenix Mecano Company

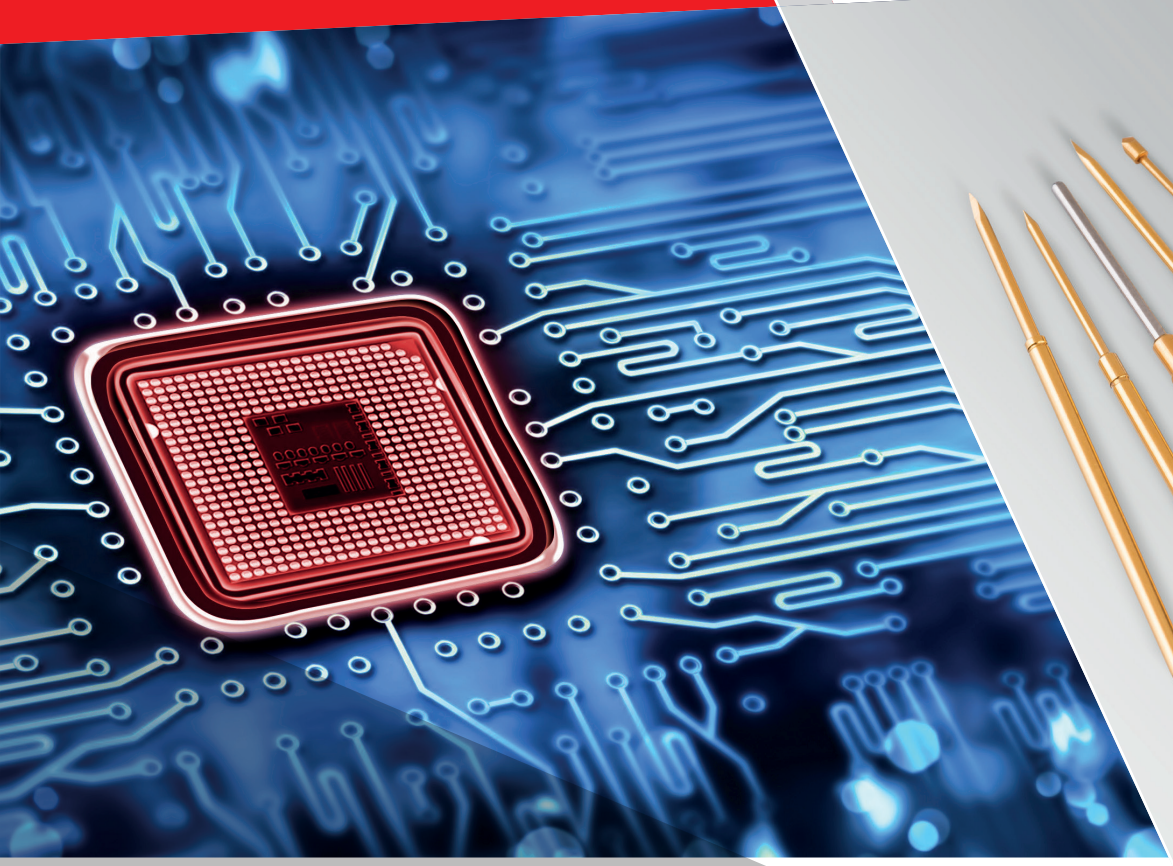



TEST PROBES FOR PCB TEST

L'IMPULSION Retrouvez nous sur www.limpulsion.fr



PTR HARTMANN …

Internationally active company domiciled in Germany – and linked into Switzerland's Phoenix Mecano AG.

PTR HARTMANN, with five locations around the globe employing 1,850 persons, achieves sales of some 50 million euros. Together, we develop, produce and market, around the world, high-quality electrical components, always with the aim of supplying our customers, every time, with the best possible solutions for their needs. Our extensive range of products and services, carefully harmonised with each other, covers the most diverse range of applications. Our standard and customised products extend from switches and precision test probes, via inductances and wound components, interface-pin blocks, PCB terminal blocks and PCB multi-connectors up to and including fully integrated connecting systems.

Our leading role on the markets of more than fifty countries is the fruit of a combination of renowned German engineering, top-quality materials, flexibly adaptable production with certified Quality Assurance and high-efficiency logistics. These advantages have for decades made us a reliable partner for the electronics and automotive industries throughout the world.

65
MARKETING/SALES PARTNERS AND DEPOTS

50
COUNTRIES

1,850
EMPLOYEES GLOBAL

L'IMPULSION | Retrouvez nous sur www.limpulsion.fr

… A PHOENIX MECANO GROUP COMPANY

Switzerland's Phoenix Mecano AG is a globally positioned technology company with a presence in the international growth markets. With our three divisions, DewertOkin Technology Group, Industrial Components and Enclosure Systems, we are the leaders in many of our markets. Important areas of application are mechanical and plant engineering, measurement and control technology, electrical engineering, automotive and railway technology, energy technology, medical technology, aerospace technology and home and hospital care.

VISION

As a global player in the components sector and as a system supplier, Phoenix Mecano develops innovative and detailed technical solutions with and for its customers. In our capacity as a specialised partner, we meet our customers' most stringent requirements in terms of technology, service, customer focus and enhanced value-creation potential.

VALUES

TRUST

Trust is at the heart of our management culture. Collaboration underpinned by trust enables us to be a reliable partner to all concerned, forging and maintaining good long-term relationships with employees, customers, suppliers, business partners, investors and other stakeholders.

RESPONSIBILITY

We take responsibility for our actions. Phoenix Mecano's management leads the way and sets an example, promoting not only the financial responsibility needed for business success but also responsibility towards the environment and society as part of a commitment to sustainability.

IMPROVEMENT

Never complacent about our achievements, we always remain open to new ideas, seizing opportunities and exploiting untapped potential. That's why we are always looking for ways to improve our products and make our processes ever more efficient.

792.9
MILLION EUR SALES

78.0
MILLION EUR EBITDA

8.148
EMPLOYEES

L'IMPULSION
Retrouvez nous sur
www.limpulsion.fr

Content

	SERIES	CENTER	EXTENSION HEIGHT mm / INCHES	WORKING TRAVEL mm / INCHES	MAX. TRAVEL mm / INCHES	PAGE
1	**TEST PROBES FOR SMALL CENTER**					**8**
	1001	30 mil / 0.76 mm	5.50 / .217	1.35 / .053	2.00 / .079	9
	1002	40 mil / 1.02 mm	5.30 / .209	1.35 / .053	2.00 / .079	9
	1003	40 mil / 1.02 mm	3.70 / .146	1.00 / .039	1.30 / .051	9
	1005	40 mil / 1.02 mm	10.50 / .413	3.00 / .118	3.80 / .149	9
2	**STANDARD TEST PROBES**					**10**
	1007	50 mil / 1.27 mm	6.70 / .264	2.40 / .095	2.80 / .110	11
	1007.50	50 mil / 1.27 mm	5.50 / .216	1.35 / .053	2.00 / .079	11
	1010	75 mil / 1.91 mm	8.30 / .327	2.40 / .095	3.00 / .118	11
	1010.50	75 mil / 1.91 mm	10.50 / .327	4.30 / .169	6.40 / .252	11
	1011	75 mil / 1.91 mm	8.20 / .323	4.20 / .165	4.20 / .165	12
	1015	100 mil / 2.54 mm	12.80 / .504	3.50 / .138	4.40 / .173	12
	1015.50	100 mil / 2.54 mm	8.70 / .342	4.20 / .165	4.20 / .165	12
	1016	100 mil / 2.54 mm	12.80 / .504	3.50 / .138	4.40 / .173	12
3	**ICT TEST PROBES | E-SERIES**					**13**
	1004/E	40 mil / 1.00 mm	16.00 / .630	4.30 / .169	6.40/.252	14
	1008/E	50 mil / 1.27 mm	16.00 / .630	4.30 / .169	6.40/.252	14
	1008/E.50	50 mil / 1.27 mm	21.30 / .829	8.00 / .315	10.00/.394	14
	1012/E	75 mil / 1.91 mm	16.00 / .630	4.30 / .169	6.40/.252	15
	1012/E2	75 mil / 1.91 mm	18.00 / .709	4.30 / .169	6.40/.252	15
	1012/E5	75 mil / 1.91 mm	21.3 / .840	4.30 / .169	6.40/.252	15
	1025/E	100 mil / 2.54 mm	16.30 / .642	4.30 / .169	6.40/.252	16
	1025/E2	100 mil / 2.54 mm	18.30 / .720	4.30 / .169	6.40/.252	16
	1025/E5	100 mil / 2.54 mm	21.30 / .840	4.30 / .169	6.40/.252	16
	1013/Z	75 mil / 1.91 mm	21.20 / .835	9.60 / .378	12.00/.472	17
	1034/E	100 mil / 2.54 mm	19.90 / .783	8.00 / .315	10.00 / .394	17
	1036/E	100 mil / 2.54 mm	19.90 / .783	10.00 / .394	12.00 / .472	17
	1008/E (HPL)	50 mil / 1.27 mm	16.00 / .630	4.30 / .169	6.40 / .252	18
	1012/E (HPL)	75 mil / 1.91 mm	16.00 / .630	4.30 / .169	6.40 / .252	18
	1025/E (HPL)	100 mil / 2.54 mm	16.30 / .642	4.30 / .169	6.40 / .252	18
	Overview Receptacles for Series 1012/E(2,5); 1025/E(2,5); 1034/E; 1036/E; 1013/Z; 1012/E (HPL); 1025/E (HPL)					19
	2021	100 mil / 2.54 mm	10.50 / .413	4.00 / .157	5.30 / .209	21
	2021/5	100 mil / 2.54 mm	13.50 / .531	4.00 / .157	5.30 / .209	21
	1021/5R	100 mil / 2.54 mm	13.50 / .531	4.00 / .157	5.30 / .209	21
	2028	100 mil / 2.54 mm	10.50 / .413	4.00 / .157	5.30 / .209	22
	2028/5	100 mil / 2.54 mm	13.50 / .531	4.00 / .157	5.30 / .209	22
	1028/4	100 mil / 2.54 mm	12.50 / .492	4.00 / .157	5.30 / .209	22
	1028/5R	100 mil / 2.54 mm	13.50 / .531	4.00 / .157	5.30 / .209	22

L'IMPULSION | Retrouvez nous sur www.limpulsion.fr

All variants to configure on ptr-hartmann.com

	SERIES	CENTER	EXTENSION HEIGHT mm / INCHES	WORKING TRAVEL mm / INCHES	MAX. TRAVEL mm / INCHES	PAGE
4	**FLYING PROBES**					**23**
	5248/G	100 mil / 2.54 mm	19.60 / .665	6.40 / .252	8.00 / .315	24
	5257/G	100 mil / 2.54 mm	14.60 / .576	4.00 / .157	5.30 / .209	24
5	**PNEUMATIC TEST PROBES**					**25**
	4006	118 mil / 3.00 mm	5.50 / .217	6.00 / .236	10.00 / .394	26
	4005	138 mil / 3.50 mm	5.50 / .217	6.00 / .236	10.00 / .394	26
	4004	160 mil / 4.00 mm	5.50 / .217	6.00 / .236	10.00 / .394	26
	4034	160 mil / 4.00 mm	10.50 / .413	4.00 / .157	5.30 / .209	27
	Pneumatic - Accessories					27
6	**TEST CONNECTORS**					**28**
	Networking					29
	USB					30
	HDMI					32
	MISC					34
	Power and Audio					35
7	**TOOLS**					**36**
	PRODUCT PORTFOLIO PTR HARTMANN GMBH					**39**

L'IMPULSION
Retrouvez nous sur
www.limpulsion.fr

Receptacles

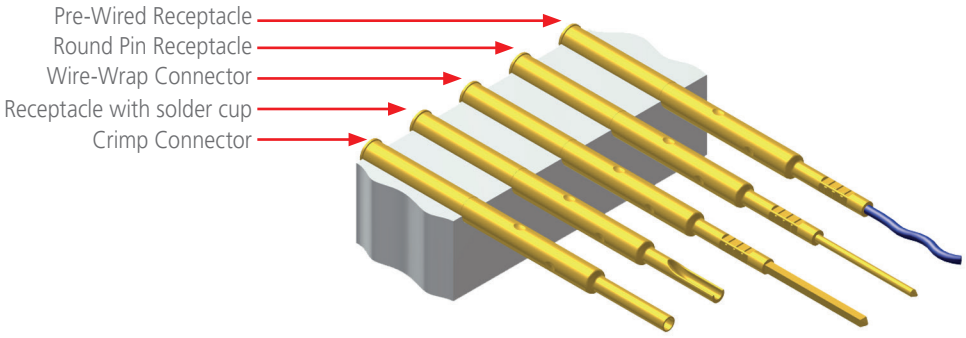

Standard Types of Receptacles

Standard receptacles are e.g. crimp, solder and wire wrap connections.

Pre-wired Receptacles

These receptacles are already fitted with a component lead which the customer can adapt to the required individual length.

Individual Types of Receptacles

Threaded Receptacles for screwable Test Probes

This type of receptacle is used in so-called test benches which test the functionality of cable harnesses. The screwing of the test probes into the receptacle prevents unintended twisting of the test probes out of the receptacle caused by the abrupt stroke movements of the test modules.

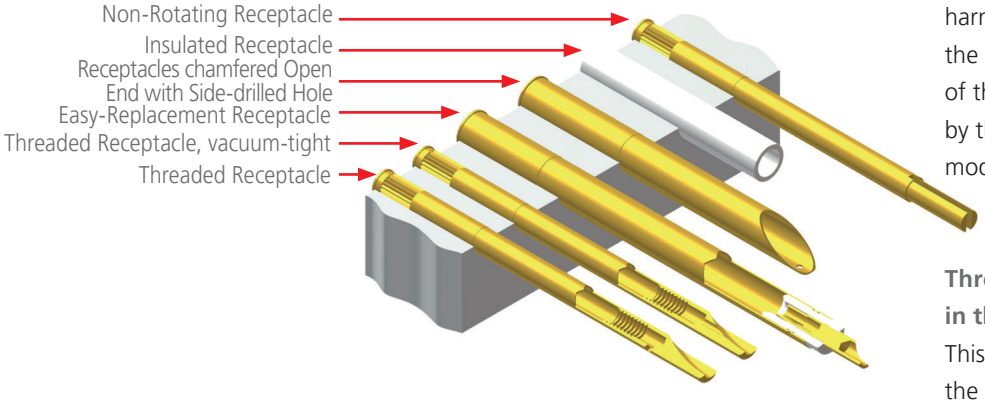

Threaded Receptacles with a drill hole in the solder cup

This receptacle is sealed vacuum-tight when the wire is soldered on.

Insulation Receptacles

This type of receptacle is deployed when test probes are used in a conductive carrier material. In this case, the insulation receptacle holds the actual receptacle of the test probe.

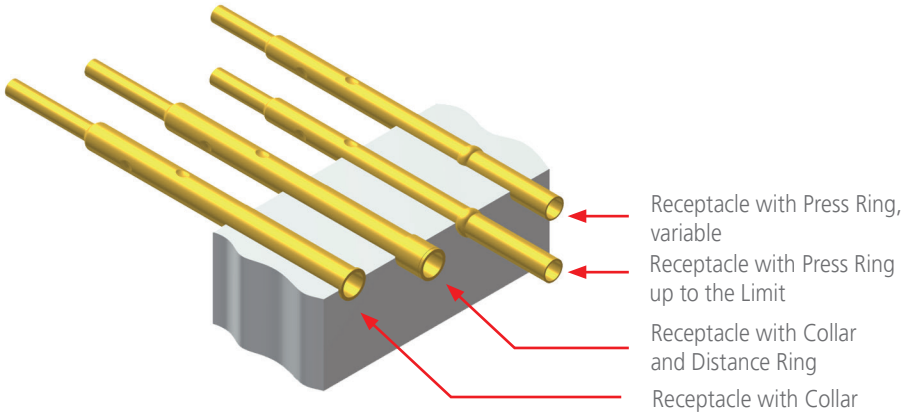

Types of Receptacles for Different Extension Heights

As standard, the receptacle is pressed into the carrier material as far as the stop. The receptacle type fitted with a press ring permits different extension heights – it is inserted to a specified distance by means of a special insertion tool. So-called distance rings are an alternative to this and are placed over the receptacle before it is pressed into the carrier material. Distance rings are available for different series and extension heights.

Tip Styles

PADs

When contacting PADs, a distinction can be made between clean and contaminated PADs. Clean PADs are contacted with passive tip styles, such as D or F. If there are contaminations, OSP or oxide layers on the PAD, aggressive tip styles such as V, Q or H will penetrate and establish a reliable contact.

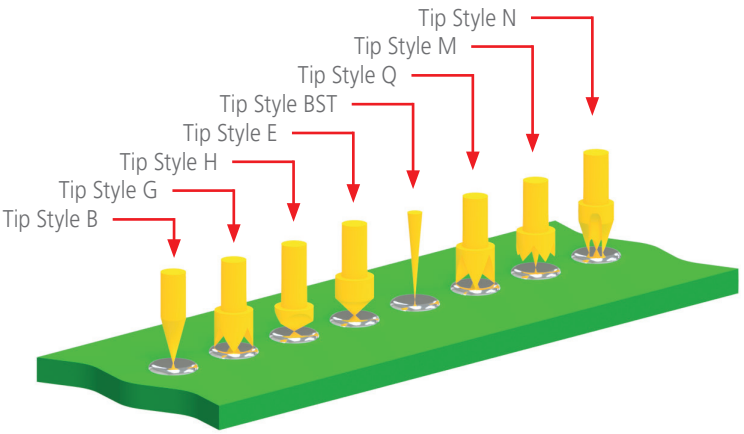

VIAs, Holes

Vias can be contacted on the surface of the via or by utilizing the edge of a tip style on the inner surface of the ring. PTR offers the head shape V with different angles to reliably contact both filled and empty vias.

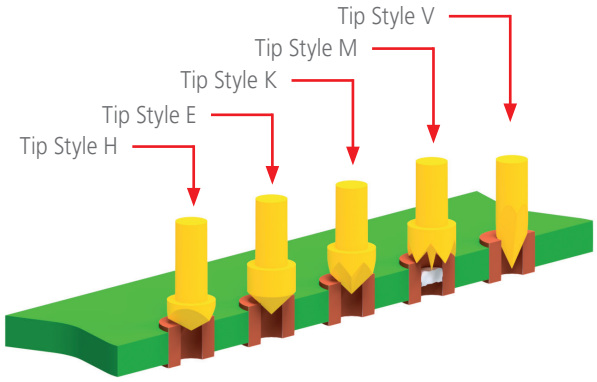

Pins, Leads

For pins and component pins, an inverse cone tip (A, A6) is recommended for optimum centered contact. Flat (F), crown (C, Q), pointed (BST, M) and tip styles with outer insulation (CS) can also be used for these kind of test points.

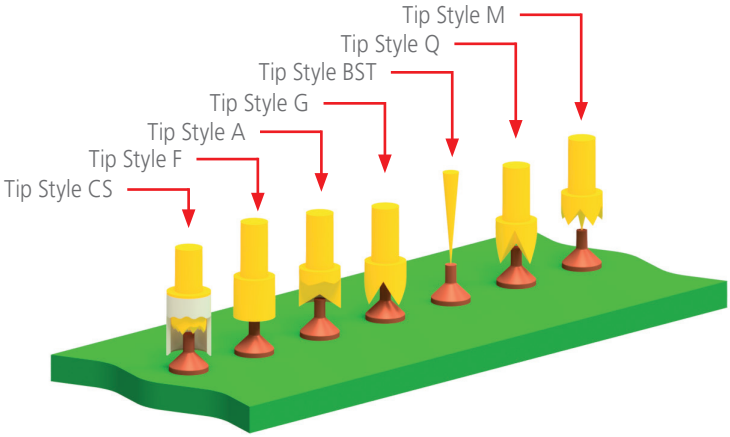

POSTS, Screws, Bolts

These kinds of test points can be contacted with self-centering tip styles, similar to those used for PINs. Some applications may call for different tips depending on the material, size, form, clearance, contamination, and other factors.

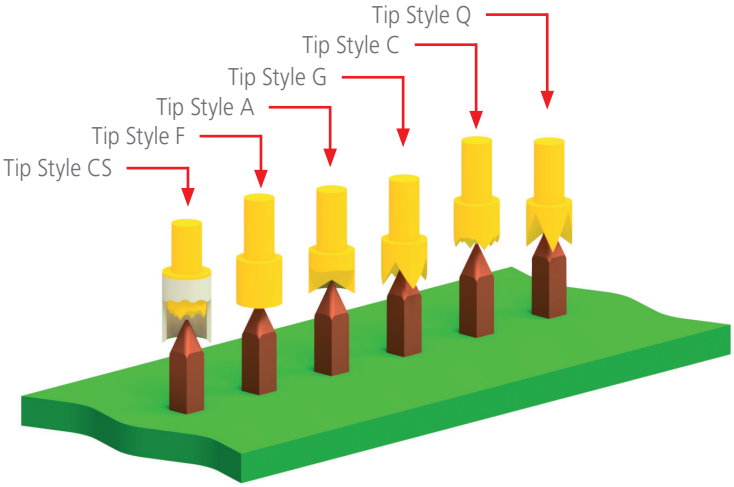

L'IMPULSION Retrouvez nous sur www.limpulsion.fr

TEST PROBES FOR SMALL CENTERS

Test Probes with Centers of 30 mil (0.76 mm) and greater have been designed for applications with very small centers.



In some cases, the diameters are extremely small, and the receptacles for these Test Probes are supplied with pre-assembled wires (AWG 30/AWG 32). The length and colour of the connection wires can be selected as required.

When these Test Probes are used in the test adapters, a guide plate is normally inserted in order to prevent misalignment and damage to the test probe plunger and to optimise the point of contact accuracy.

Test Probes for small centers

All variants to configure on ptr-hartmann.com

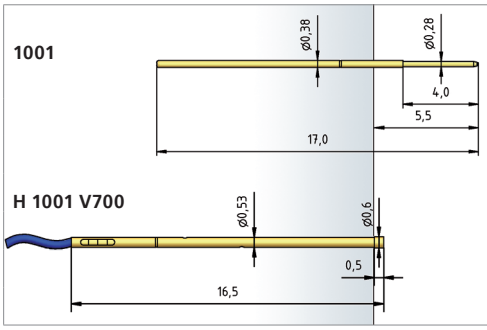

1001 0.76 mm / 30 mil

Full travel	2.00 mm
Working travel	1.35 mm
Pre-loaded spring force	0.13 N
Spring force at working travel	0.30 N
Max. current rating	0.5 A
Temperature range	-40 °C up to +250 °C

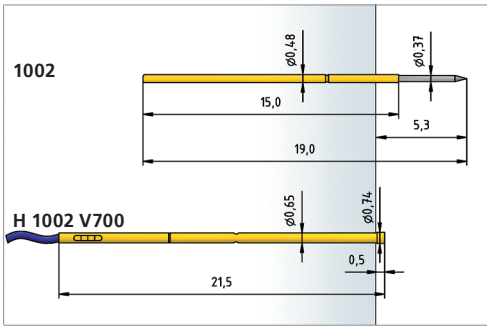

1002 1.02 mm / 40 mil

Full travel	2.00 mm
Working travel	1.35 mm
Pre-loaded spring force	0.25 N
Spring force at working travel	0.40 N
Max. current rating	1.0 A
Temperature range	-30 °C up to +120 °C

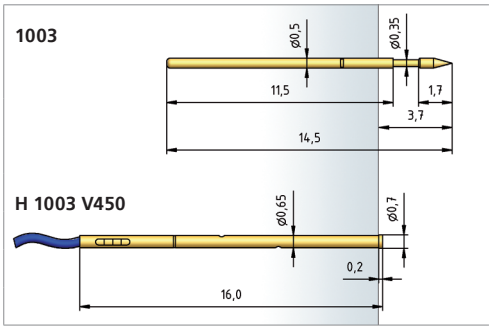

1003 1.02 mm / 40 mil

Full travel	1.30 mm
Working travel	1.00 mm
Pre-loaded spring force	0.40 N
Spring force at working travel	0.75 N
Max. current rating	1.0 A
Temperature range	-30 °C up to +120 °C

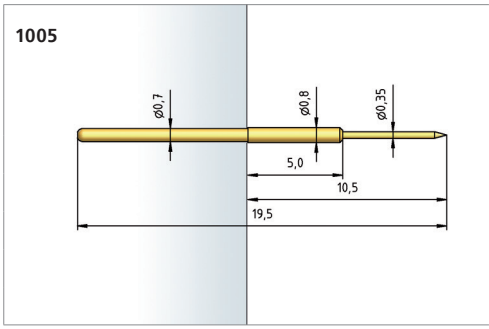

1005 1.02 mm / 40 mil

Full travel	3.80 mm
Working travel	3.00 mm
Pre-loaded spring force	0.20 N
Spring force at working travel	0.80 N
Max. current rating	3.0 A
Temperature range	-30 °C up to +120 °C

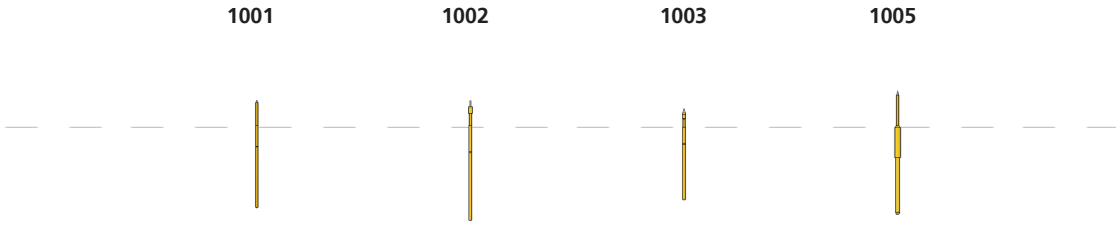

L'IMPULSION Retrouvez nous sur www.limpulsion.fr

STANDARD TEST PROBES

The Test Probe series up to 100 mil consist of models with different sizes, travel and extension heights.



This wide range of products allows multi-purpose use such as the testing of assembled components (in-circuit test or function test) or in other applications – wherever a flexible electrical connection is required.

Standard Test Probes

All variants to configure on ptr-hartmann.com

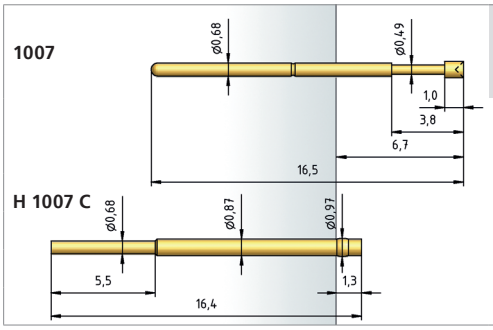

1007 1.27 mm / 50 mil

Full travel	2.80 mm
Working travel	2.40 mm
Pre-loaded spring force	0.25 N - 0.40
Spring force at working travel	0.70 N - 1.70 N
Max. current rating	3.0 A
Temperature range	-30 °C up to +120 °C

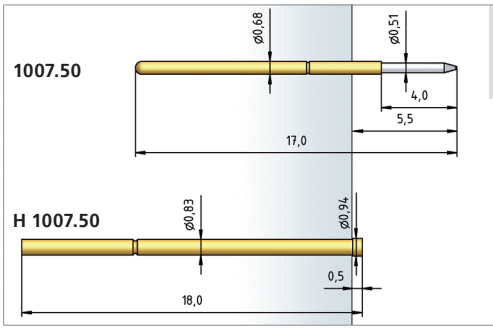

1007.50 1.27 mm / 50 mil

Full travel	2.00 mm
Working travel	1.35 mm
Pre-loaded spring force	0.35 N
Spring force at working travel	0.75 N
Max. current rating	3.0 A
Temperature range	-30 °C up to +120 °C

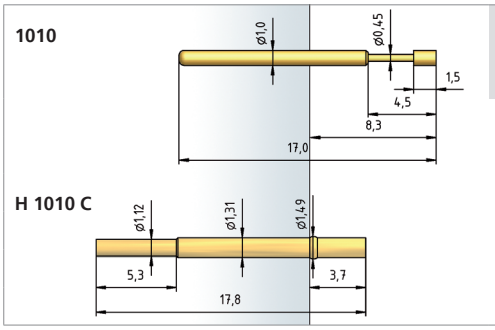

1010 1.91 mm / 75 mil

Full travel	3.00 mm
Working travel	2.40 mm
Pre-loaded spring force	0.30 N - 0.50 N
Spring force at working travel	1.50 N - 2.25 N
Max. current rating	2.0 A
Temperature range	-30 °C up to +120 °C

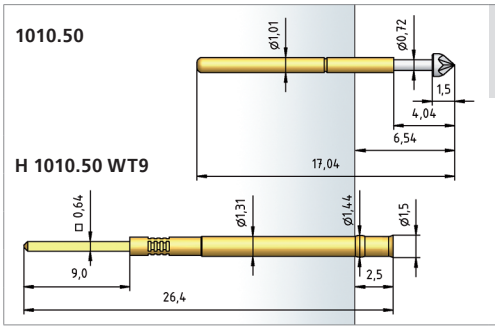

1010.50 1.91 mm / 75 mil

Full travel	2.54 mm
Pre-loaded spring force	0.18 N - 0.32 N
Spring force at full travel	0.80 N - 1.25 N
Max. current rating	3.0 A
Temperature range	-40 °C up to +250 °C

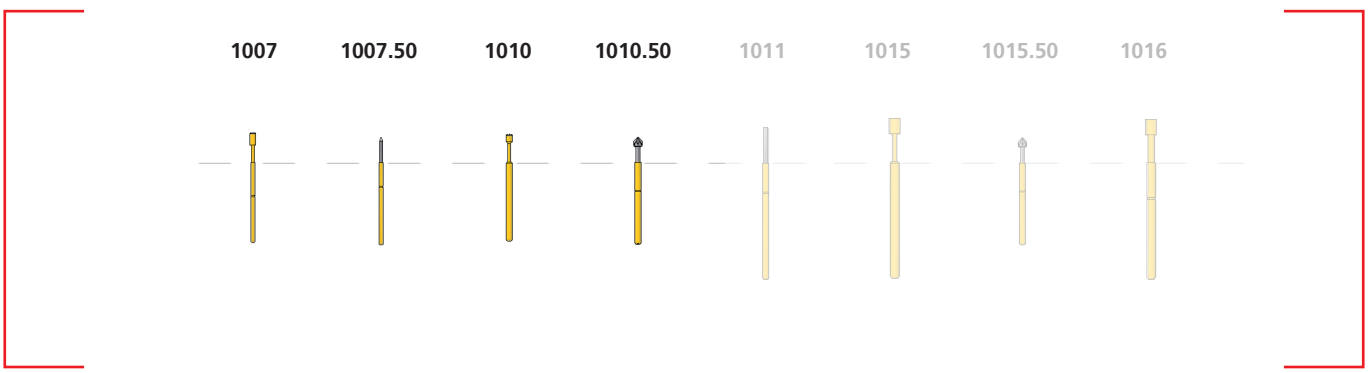

L'IMPULSION
Retrouvez nous sur
www.limpulsion.fr

Standard Test Probes

All variants to configure on ptr-hartmann.com

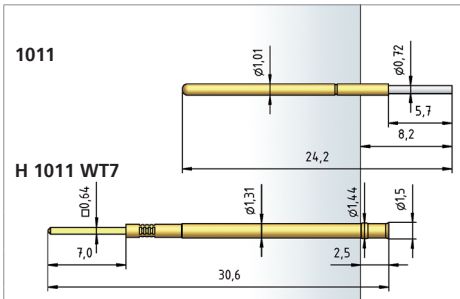

1011 1.91 mm / 75 mil

Full travel	4.20 mm
Pre-loaded spring force	0.30 N
Spring force at working travel	1.10 - 1.50 N
Max. current rating	3.0 A
Temperature range	-40 °C up to +250 °C

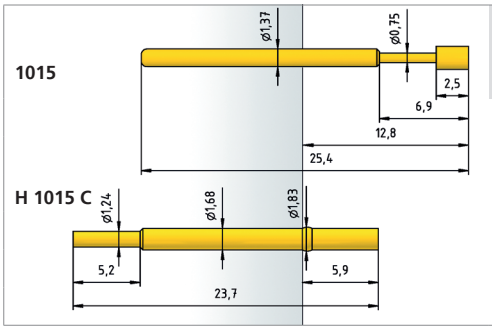

1015 2.54 mm / 100 mil

Full travel	4.40 mm
Working travel	3.50 mm
Pre-loaded spring force	0.25 - 0.60 N
Spring force at working travel	0.70 - 3.00 N
Max. current rating	5.0 A
Temperature range	-30 °C up to +120 °C

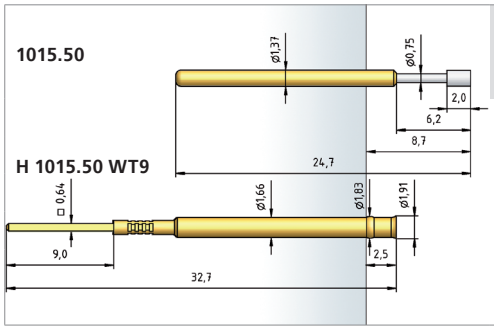

1015.50 2.54 mm / 100 mil

Full travel	4.20 mm
Pre-loaded spring force	0.35 N - 0.70 N
Spring force at working travel	1.00 - 2.50 N
Max. current rating	3.0 A
Temperature range	-40 °C up to +250 °C

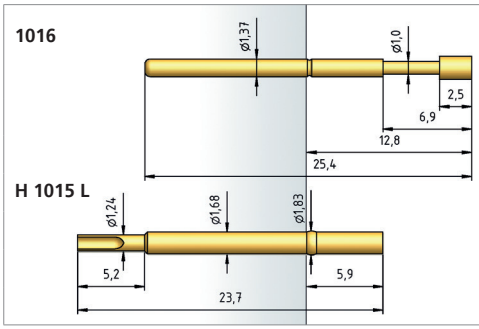

1016 2.54 mm / 100 mil

Full travel	4.40 mm
Working travel	3.50 mm
Pre-loaded spring force	0.40 - 0.90 N
Spring force at working travel	1.50 - 3.00 N
Max. current rating	3.0 A
Temperature range	-30 °C up to +120 °C

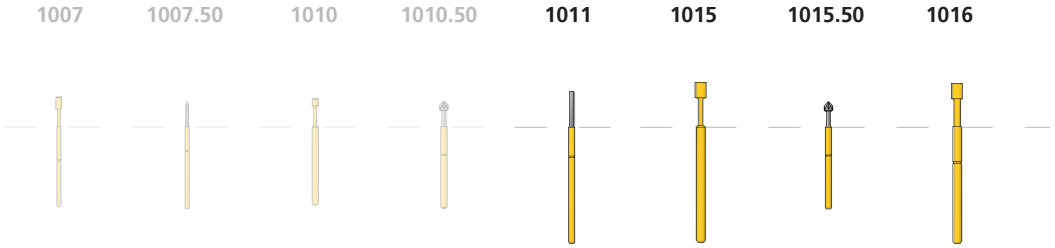

L'IMPULSION Retrouvez nous sur www.limpulsion.fr

ICT-TEST PROBES (E-SERIES)

The range of ICT Test Probes comprises all standard series of products which have established themselves on the market as international standards.



These are test probes for centers from 50 mil to 100 mil with a large selection of different tip styles and contact pressures for almost all test requirements. In addition, test probe units with a longer test probe travel are available for 2-level adaptations. Receptacles with a press ring can be supplied for this series. This press ring can be used as a stop to achieve a constant extension height in the adapter, but it also allows variable heights if the press ring is pressed into a defined setting in the take-up drill hole.

The ICT receptacles are available for various types of connections. In addition to these standards, PTR HARTMANN also offers metric types for the ICT/FT. In this case, the receptacles are normally pressed into the take-up drill hole as far as the stop. Here, too, test probe barrels with different collar heights allow variable extension heights in the adapter.

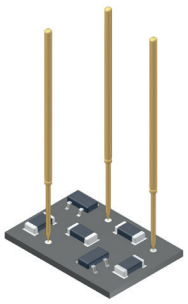

Component Check in the In-Circuit Test

In-circuit tests are used to recognize faulty installed components as soon as possible. Using defined test points, and on installed PCBs, the electrical data, the correct position and the direction of installation of the individual components are tested. In this way, and in conjunction with a function test, faulty components can be quickly recognized and additional costs avoided on the customer's premises.

L'IMPULSION
Retrouvez nous sur
www.limpulsion.fr

ICT Test Probes (E-Series)

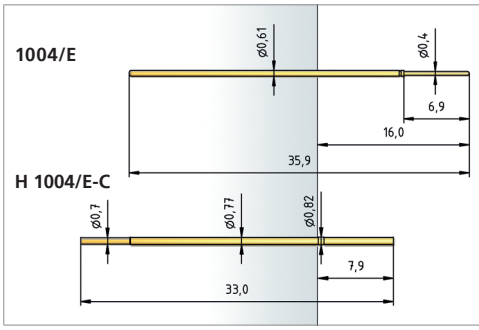

1004/E 1.00 mm / 40 mil

Full travel	6.40 mm
Working travel	4.30 mm
Pre-loaded spring force	0.20 N
Spring force at working travel	0.80 N
Max. current rating	2.0 A
Temperature range	-30 °C up to +120 °C

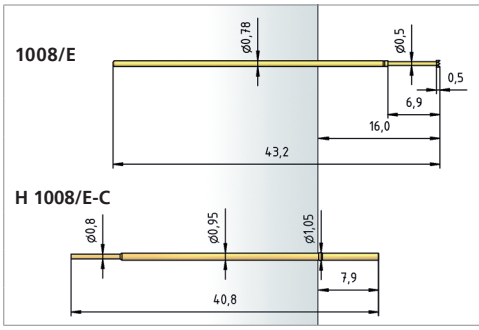

1008/E 1.27 mm / 50 mil

Full travel	6.40 mm
Working travel	4.30 mm
Pre-loaded spring force	0.30 - 0.60 N
Spring force at working travel	1.00 - 2.80 N
Max. current rating	2.0 ... 3.0 A
Temperature range	-30 °C up to +120 °C

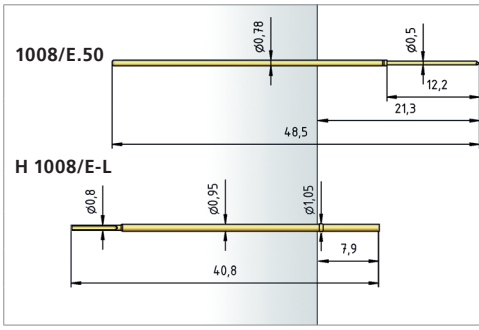

1008/E.50 1.27 mm / 50 mil | Long Travel

Full travel	10.00 mm
Working travel	8.00 mm
Pre-loaded spring force	0.25 - 0.30 N
Spring force at working travel	1.00 - 1.50 N
Max. current rating	2.0 ... 3.0 A
Temperature range	-30 °C up to +120 °C

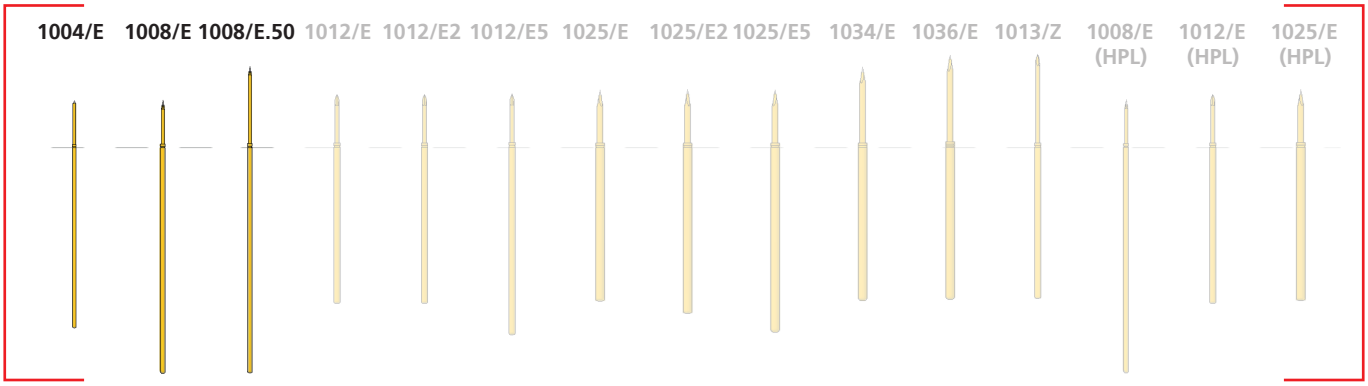

All variants to configure on ptr-hartmann.com

1012/E

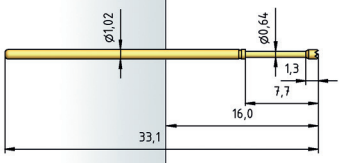

Receptacles see page 19

1012/E 1.91 mm / 75 mil

Full travel	6.40 mm
Working travel	4.30 mm
Pre-loaded spring force	0.30 - 0.70 N
Spring force at working travel	1.00 - 2.80 N
Max. current rating	3.0 ... 4.0 A
Temperature range	-30 °C up to +120 °C

1012/E2

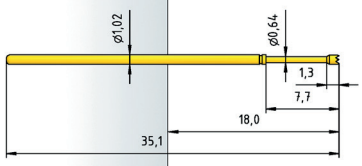

Receptacles see page 19

1012/E2 1.91 mm / 75 mil

Full travel	6.40 mm
Working travel	4.30 mm
Pre-loaded spring force	0.30 - 0.70 N
Spring force at working travel	1.00 - 2.80 N
Max. current rating	3.0 ... 4.0 A
Temperature range	-30 °C up to +120 °C

1012/E5

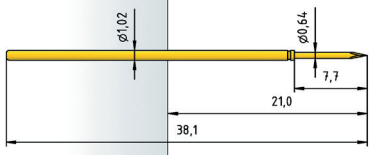

Receptacles see page 19

1012/E5 1.91 mm / 75 mil

Full travel	6.40 mm
Working travel	4.30 mm
Pre-loaded spring force	0.30 - 0.70 N
Spring force at working travel	1.00 - 2.80 N
Max. current rating	3.0 ... 4.0 A
Temperature range	-30 °C up to +120 °C

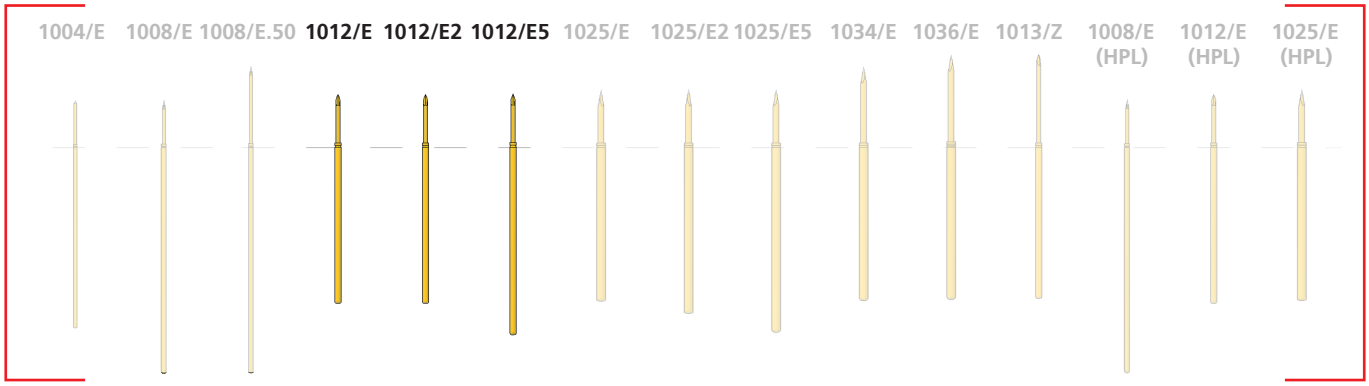

L'IMPULSION Retrouvez nous sur www.limpulsion.fr

ICT Test Probes (E-Series)

1025/E

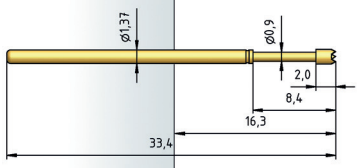

Receptacles see page 20

1025/E 2.54 mm / 100 mil

Full travel	6.40 mm
Working travel	4.30 mm
Pre-loaded spring force	0.20 - 1.40 N
Spring force at working travel	0.60 - 4.00 N
Max. current rating	5.0 ... 8.0 A
Temperature range	-30 °C up to +120 °C

1025/E2

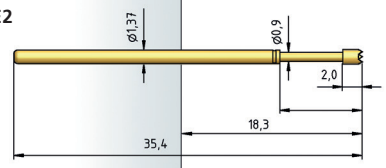

Receptacles see page 20

1025/E2 2.54 mm / 100 mil

Full travel	6.40 mm
Working travel	4.30 mm
Pre-loaded spring force	0.20 - 1.40 N
Spring force at working travel	0.60 - 4.00 N
Max. current rating	5.0 ... 8.0 A
Temperature range	-30 °C up to +120 °C

1025/E5

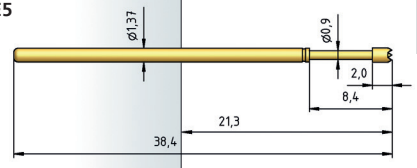

Receptacles see page 20

1025/E5 2.54 mm / 100 mil

Full travel	6.40 mm
Working travel	4.30 mm
Pre-loaded spring force	1.30 - 2.00 N
Spring force at working travel	2.00 - 3.00 N
Max. current rating	5.0 ... 8.0 A
Temperature range	-30 °C up to +120 °C

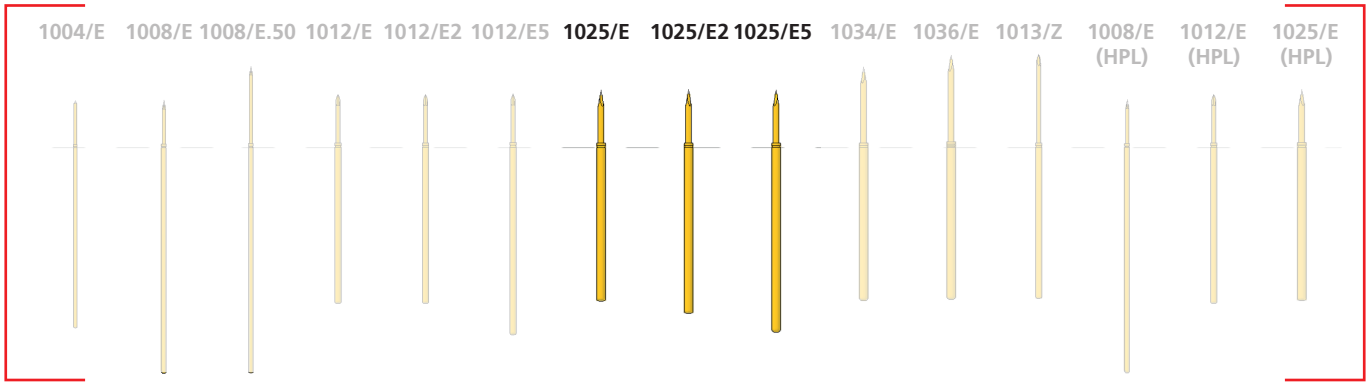

All variants to configure on ptr-hartmann.com

1034/E

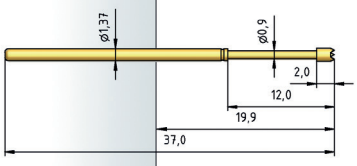

Receptacles see page 20

1034/E 2.54 mm / 100 mil

Full travel	10.00 mm
Working travel	8.00 mm
Pre-loaded spring force	0.40 - 0.50 N
Spring force at working travel	1.50 - 3.00 N
Max. current rating	5.0 ... 8.0 A
Temperature range	-30 °C up to +120 °C

1036/E

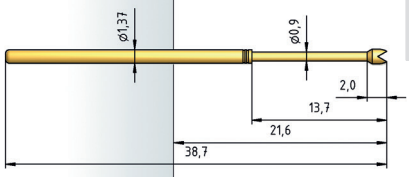

Receptacles see page 20

1036/E 2.54 mm / 100 mil

Full travel	11.70 mm
Working travel	9.30 mm
Pre-loaded spring force	0.30 - 0.50 N
Spring force at working travel	1.50 - 3.00 N
Max. current rating	3.0 ... 4.0 A
Temperature range	-30 °C up to +120 °C

1013/Z

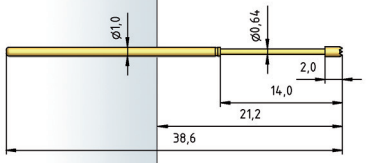

Receptacles see page 19

1013/Z 1.91 mm / 75 mil

Full travel	12.00 mm
Working travel	9.60 mm
Pre-loaded spring force	0.35 - 0.40 N
Spring force at working travel	1.20 - 1.60 N
Max. current rating	3.0 A
Temperature range	-30 °C up to +120 °C

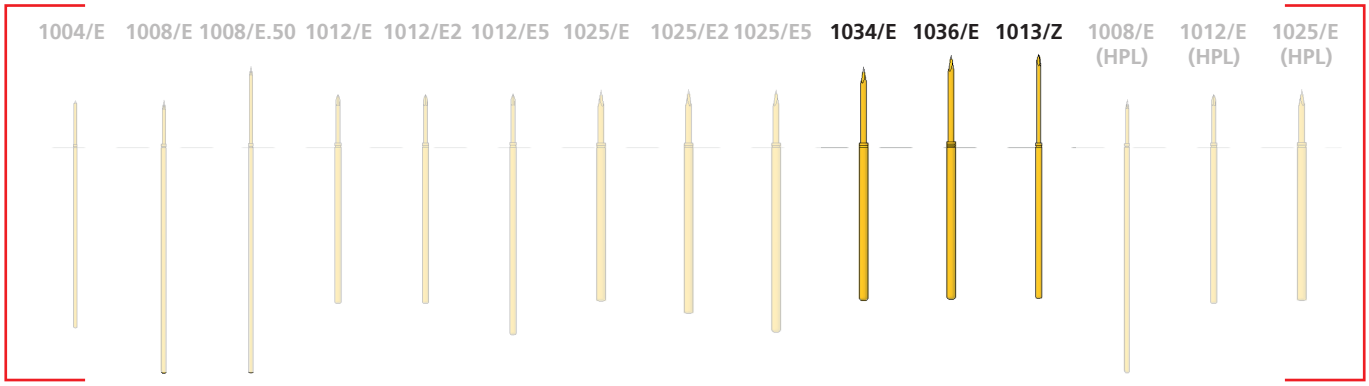

L'IMPULSION Retrouvez nous sur www.limpulsion.fr

ICT Test Probes (E-Series)

All variants to configure on ptr-hartmann.com

1008/E

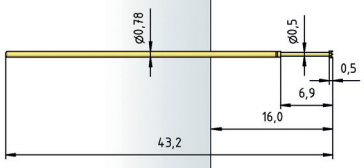

1008/E (HPL) 1.27 mm / 50 mil

Full travel	6.40 mm
Working travel	4.30 mm
Pre-loaded spring force	1.40 N
Spring force at working travel	2.00 N
Max. current rating	2.0 ... 3.0 A
Temperature range	-30 °C up to +120 °C

1012/E

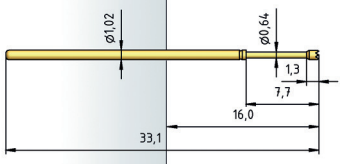

Receptacles see page 19

1012/E (HPL) 1.91 mm / 75 mil

Full travel	6.40 mm
Working travel	4.30 mm
Pre-loaded spring force	1.20 - 1.60 N
Spring force at working travel	2.00 - 2.80 N
Max. current rating	3.0 ... 4.0 A
Temperature range	-30 °C up to +120 °C

1025/E

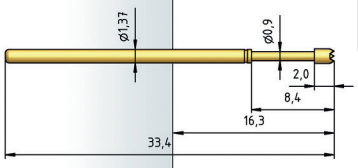

Receptacles see page 20

1025/E (HPL) 2.54 mm / 100 mil

Full travel	6.40 mm
Working travel	4.30 mm
Pre-loaded spring force	1.30 - 2.00 N
Spring force at working travel	2.00 - 3.00 N
Max. current rating	5.0 ... 8.0 A
Temperature range	-30 °C up to +120 °C

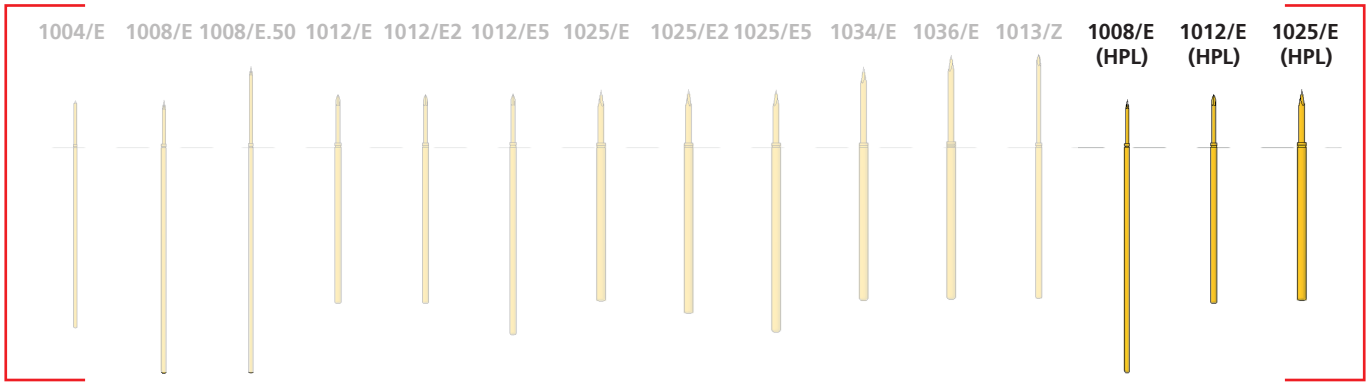

L'IMPULSION | Retrouvez nous sur www.limpulsion.fr

Receptacles for Series 1012/E · 1013/Z

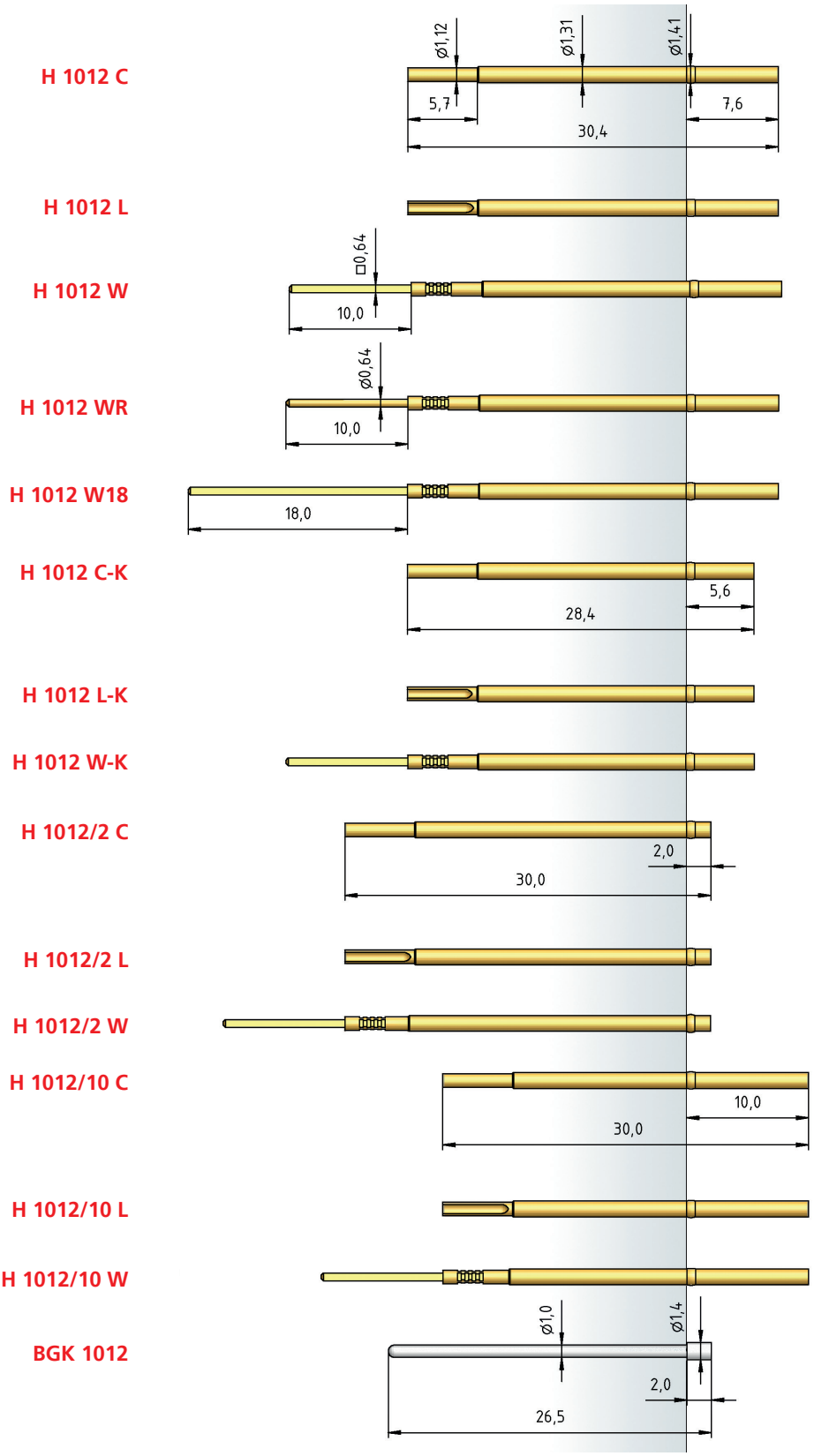

L'IMPULSION Retrouvez nous sur www.limpulsion.fr

Receptacles for Series 1025/E · 1034/E · 1036/E

H 1025 C

H 1025 L

H 1025 W

H 1025 WR

H 1025 W18

H 1025 C-K

H 1025 L-K

H 1025 W-K

H 1025/2 C

H 1025/2 L

H 1025/2 W

H 1025/12 C

H 1025/12 L

H 1025/12 W

BGK 1025

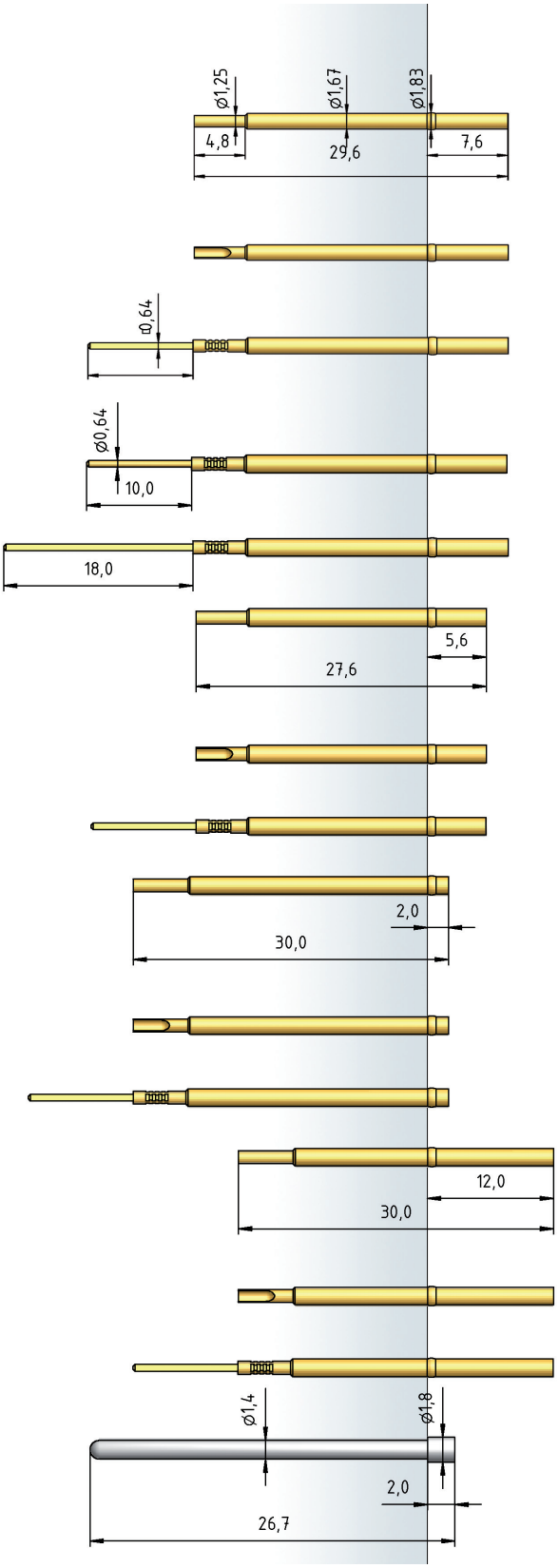

All variants to configure on ptr-hartmann.com

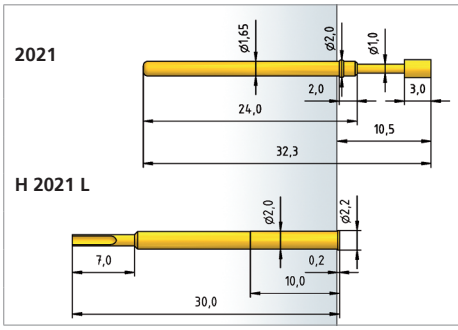

2021 2.54 mm / 100 mil

Full travel	5.30 mm
Working travel	4.00 mm
Pre-loaded spring force	0.30 - 1.00 N
Spring force at working travel	0.70 - 5.00 N
Max. current rating	5.0 ... 8.0 A
Temperature range	-30 °C up to +120 °C

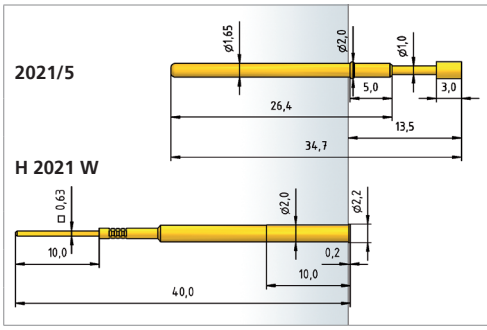

2021/5 2.54 mm / 100 mil

Full travel	5.30 mm
Working travel	4.00 mm
Pre-loaded spring force	0.30 - 1.00 N
Spring force at working travel	0.70 - 5.00 N
Max. current rating	5.0 ... 8.0 A
Temperature range	-30 °C up to +120 °C

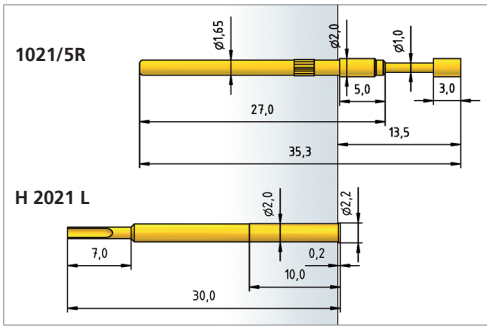

1021/5R 2.54 mm / 100 mil

Full travel	5.30 mm
Working travel	4.00 mm
Pre-loaded spring force	0.30 - 1.00 N
Spring force at working travel	0.70 - 5.00 N
Max. current rating	5.0 ... 8.0 A
Temperature range	-30 °C up to +120 °C

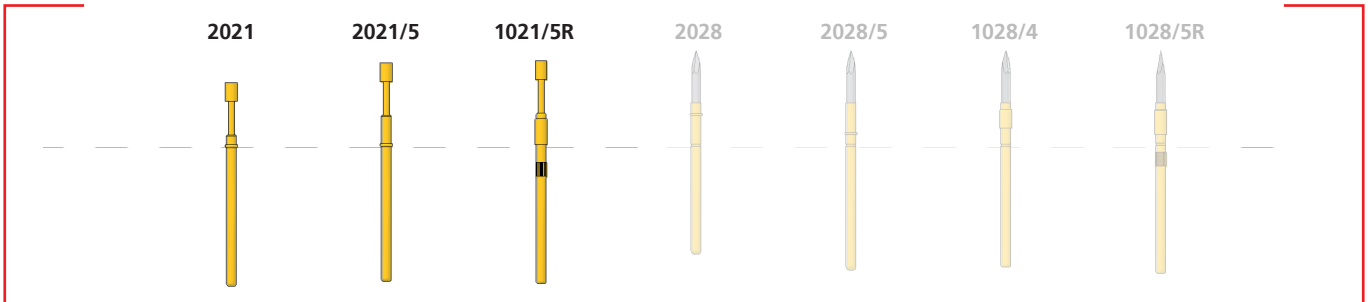

L'IMPULSION
Retrouvez nous sur
www.limpulsion.fr

ICT Test Probes (E-Series)

All variants to configure on ptr-hartmann.com

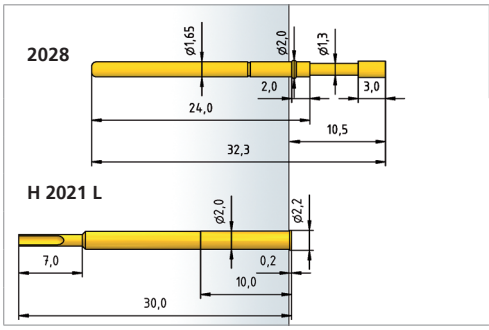

2028 2.54 mm / 100 mil

Full travel	5.30 mm
Working travel	4.00 mm
Pre-loaded spring force	0.30 - 1.00 N
Spring force at working travel	0.70 - 5.00 N
Max. current rating	3.0 ... 5.0 A
Temperature range	-30 °C up to +120 °C

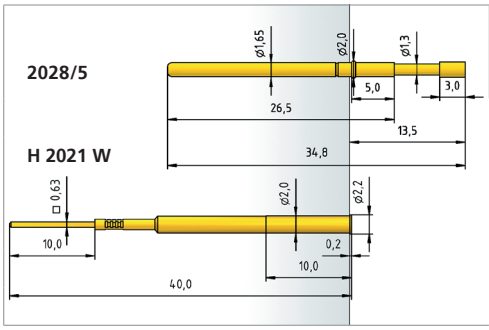

2028/5 2.54 mm / 100 mil

Full travel	5.30 mm
Working travel	4.00 mm
Pre-loaded spring force	0.30 - 1.00 N
Spring force at working travel	0.70 - 5.00 N
Max. current rating	3.0 ... 5.0 A
Temperature range	-30 °C up to +120 °C

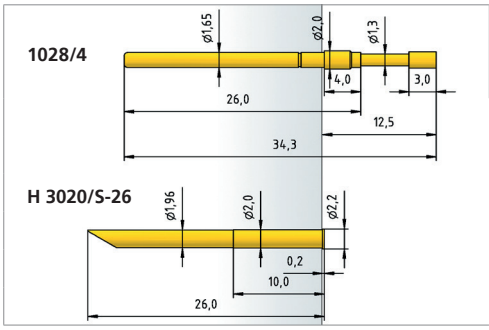

1028/4 2.54 mm / 100 mil

Full travel	5.30 mm
Working travel	4.00 mm
Pre-loaded spring force	0.30 - 1.00 N
Spring force at working travel	0.70 - 5.00 N
Max. current rating	3.0 ... 5.0 A
Temperature range	-30 °C up to +120 °C

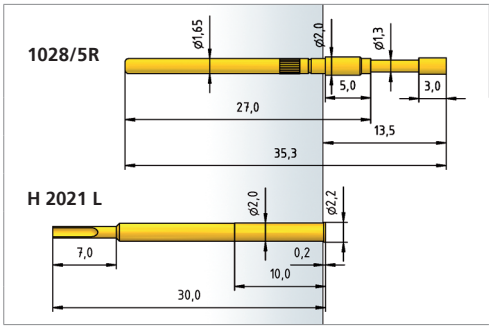

1028/5R 2.54 mm / 100 mil

Full travel	5.30 mm
Working travel	4.00 mm
Pre-loaded spring force	0.30 - 1.00 N
Spring force at working travel	0.70 - 5.00 N
Max. current rating	3.0 ... 5.0 A
Temperature range	-30 °C up to +120 °C



L'IMPULSION | Retrouvez nous sur www.limpulsion.fr

FLYING PROBES



The Flying Probe testers are designed as a thread variant and are suitable for use in Acculogic (Scorpion) and Digitaltest test systems. A special locking system and extremely high precision of the single components ensure very high test point accuracy.

L'IMPULSION
Retrouvez nous sur
www.limpulsion.fr

Flying Probes

All variants to configure on ptr-hartmann.com

5248/G

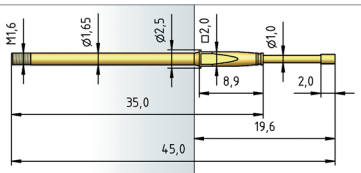

H 1021/GR-L

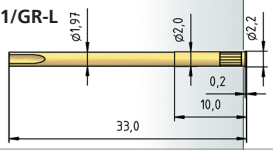

5248/G 2.54 mm / 100 mil

Full travel	8.00 mm
Working travel	6.40 mm
Pre-loaded spring force	0.50 N
Spring force at working travel	1.75 N
Max. current rating	5.0 ... 8.0 A
Temperature range	-30 °C up to +120 °C

5257/G

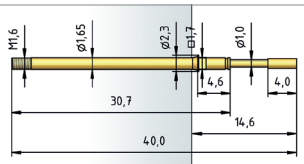

H 1021/GRV-L

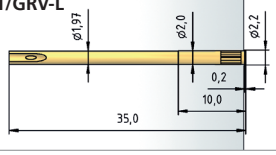

5257/G 2.54 mm / 100 mil

Full travel	5.30 mm
Working travel	4.00 mm
Pre-loaded spring force	0.60 N
Spring force at working travel	1.75 N
Max. current rating	5.0 ... 8.0 A
Temperature range	-30 °C up to +120 °C

5248/G



5257/G



L'IMPULSION | Retrouvez nous sur www.limpulsion.fr

PNEUMATIC TEST PROBES

Pneumatic Test Probes are operated with compressed air. The plunger presses against the test piece at an operating pressure of 6 bar applied to the test probe via a pneumatic hose. Depending on the size, the maximum contact pressure is up to 1.5 N.



Normally Pneumatic Test Probes are used for function test tasks, and always when measuring points must be triggered individually. A wide range of accessories with distributors, reducers, connection cable glands etc. is available for setting up an extremely large number of contacting processes. As the Pneumatic Test Probes are driven individually / independently, use without complicated test adapters is also possible. In addition to standard types, there are models with an easy-replacement system and models which function as an opener. With the easy-to-use easy-replacement system, it is only necessary to replace the pneumatic cylinder together with the contacting unit – there is no need to release either the wiring or the pneumatic hose. This system, patented by PTR HARTMANN, considerably reduces set-up and maintenance times. The opener series 4034 is a technically sophisticated variant, and is also patented. Because of the special design in the barrel, at first it is closed. It is only when a component to be contacted is not present and the switch travel is exceeded that the test probe opens and does not pass on a signal.

L'IMPULSION
Retrouvez nous sur
www.limpulsion.fr

Pneumatic Test Probes

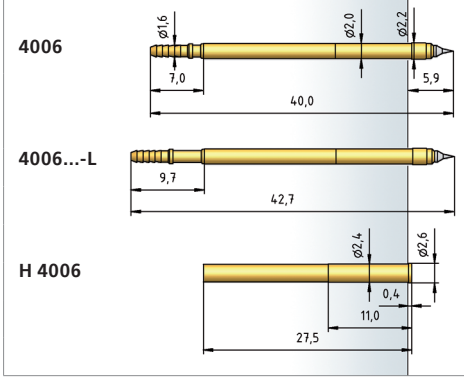

4006 3.0 mm / 118 mil

Full travel	10.00 mm
Working travel	6.00 mm
Spring force at working travel	0.60 N
Operating pressure	6 bar
Max. current rating	2.0 A
Temperature range	-30 °C up to +120 °C

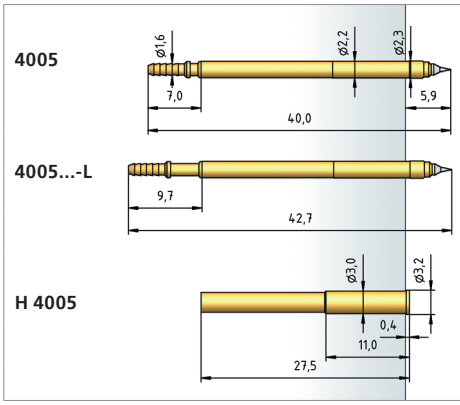

4005 3.5 mm / 138 mil

Full travel	10.00 mm
Working travel	6.00 mm
Spring force at working travel	0.80 N
Operating pressure	6 bar
Max. current rating	2.0 A
Temperature range	-30 °C up to +120 °C

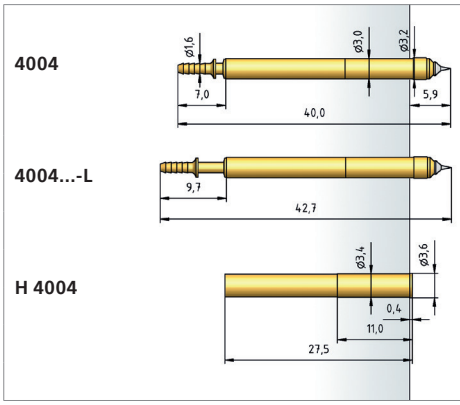

4004 4.0 mm / 160 mil

Full travel	10.00 mm
Working travel	6.00 mm
Spring force at working travel	1.50 N
Operating pressure	6 bar
Max. current rating	3.0 A
Temperature range	-30 °C up to +120 °C

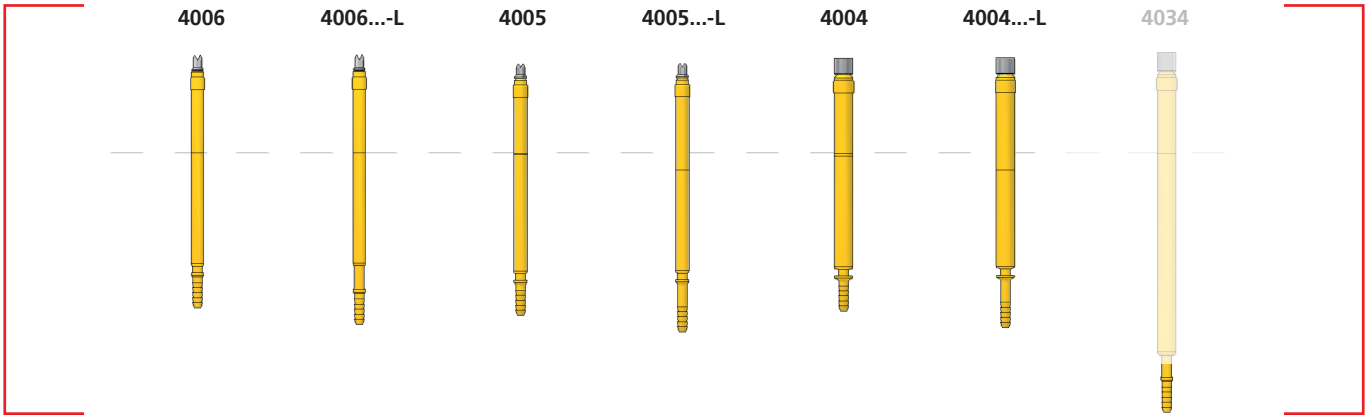

All variants to configure on ptr-hartmann.com

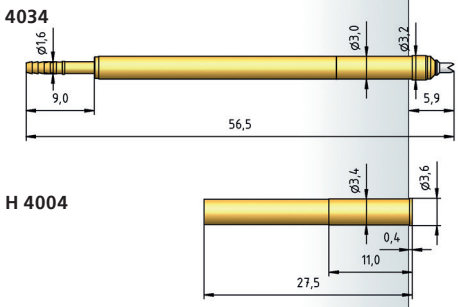

4034 4.00 mm / 160 mil

Full travel	10.00 mm
Working travel	5.00 mm
Switching travel	6.00 N
Spring force at working travel	1.60 N
Spring force at switching travel	1.50 N
Operating pressure	6 bar
Max. current rating	3.0 A
Temperature range	-30 °C up to +120 °C

Pneumatic | Accessories

Reducer **RS 3/1**

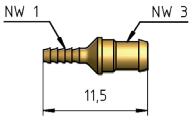



Reducer **RS 3/2**

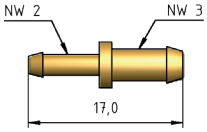

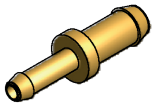

Dummy Plug for Distributor (incl. 1 seal) **BSV 1/8**

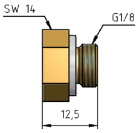



Dummy Plug for Distributor (incl. 1 seal) **BSV M5**

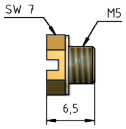



Threaded Sleeve (incl. 1 seal) **AV M5/1**

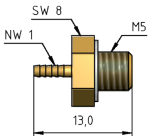

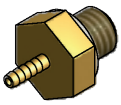

Threaded Sleeve (incl. 1 seal) **AV M5/2**

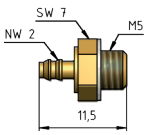



Threaded Sleeve (incl. 1 seal) **AV M5/3**

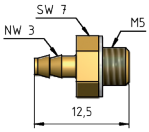



T-Piece **TS 3xM5**

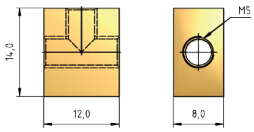



Tenfolder Distributor **V 10xM5**

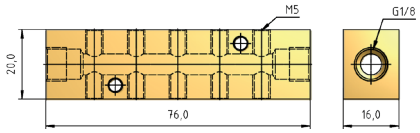

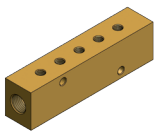

Compressed Air Hose for NW 1 **DS 1 -** $\varnothing_{inside}$ - 1.2 mm / $\varnothing_{outside}$ - 2.0 mm

Compressed Air Hose for NW 3 **DS 3 -** $\varnothing_{inside}$ - 2.0 mm / $\varnothing_{outside}$ - 3.9 mm

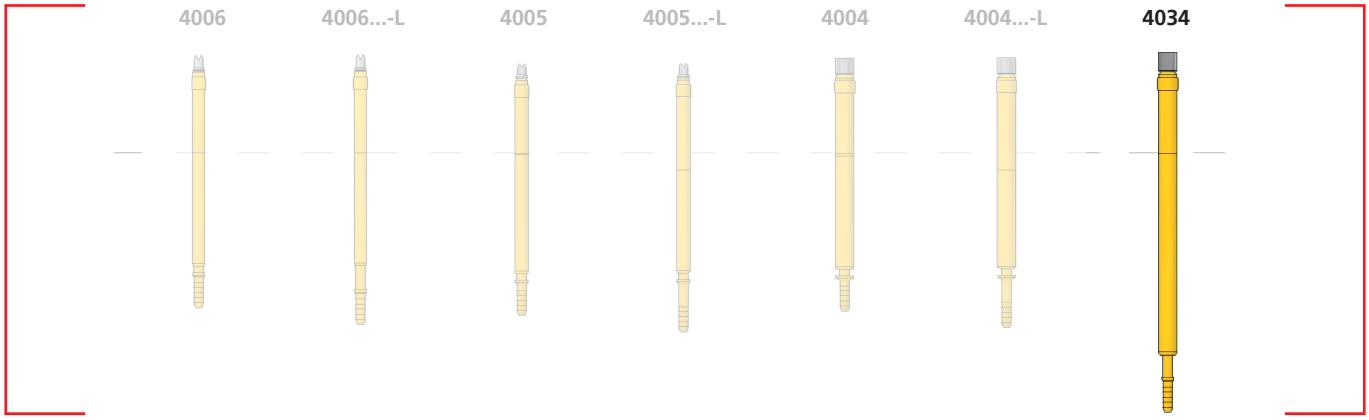

L'IMPULSION Retrouvez nous sur www.limpulsion.fr

TEST CONNECTORS

PTR HARTMANN offers test connectors for all common USB, RJ, Lightning, HDMI as well as power and audio connections.

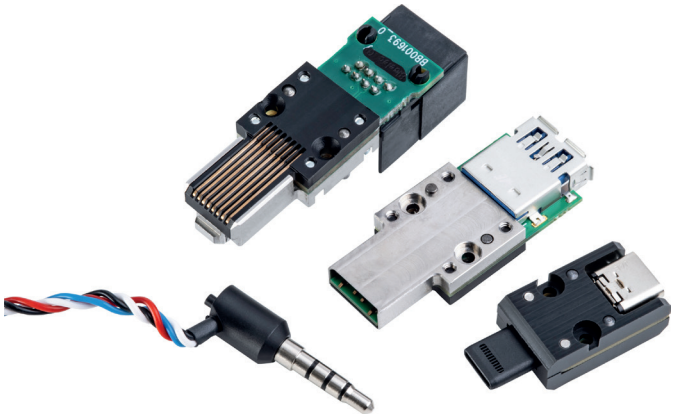

The test connectors guarantee long-lasting, reliable and low-wear contacting. Thanks to their optimized insertion chamfers, they are perfectly suited for testing electronic assemblies, e.g. in telecommunication, in the infotainment or automotive segment, even if the assembly tolerances are larger.

The test connectors are often used for end-of-line testing as well as for flashing devices. Cables with the respective original connector are used as the interface from the test connector to the test system, thus ensuring optimum data transmission. The particularly robust design without sharp edges in the guide area ensures an outstandingly long mechanical service life and damage-free contacting of the connector. The compact design allows the use even in confined spaces and at the same time is capable of contacting deeper plug connectors.

Test Connectors | Networking

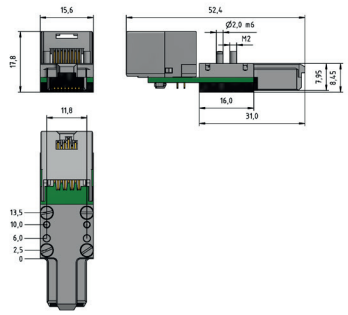

7131-RJ45-M-008 | STANDARD

Impedance	100.0 Ohm
Mating force (max)	35.0 N
Un-mating force (max)	25.0 N
Current (max) signal	0.5 A
Temperature range	0 °C up to 60 °C
Relative humidity (non-condensing)	15% up to 95%

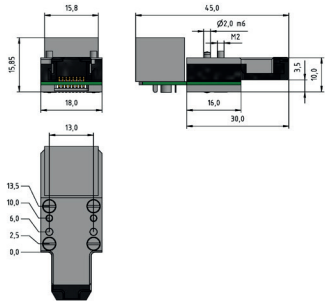

7132-RJ45.SH-M-008

Impedance	100.0 Ohm
Mating force (max)	35.0 N
Un-mating force (max)	25.0 N
Current (max) signal	0.5 A
Temperature range	0 °C up to 60 °C
Relative humidity (non-condensing)	15% up to 95%

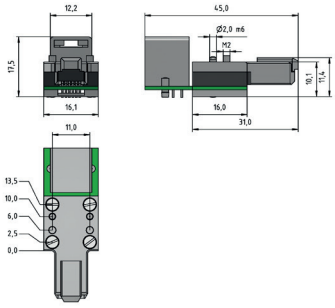

7130-RJ11-M-006 | STANDARD

Mating force (max)	35.0 N
Un-mating force (max)	25.0 N
Current (max) signal	0.75 A
Temperature range	0 °C up to 60 °C
Relative humidity (non-condensing)	15% up to 95%

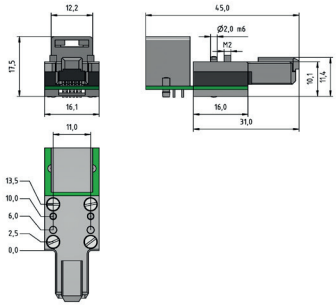

7130-RJ14-M-006 | STANDARD

Mating force (max)	35.0 N
Un-mating force (max)	25.0 N
Current (max) signal	0.75 A
Temperature range	0 °C up to 60 °C
Relative humidity (non-condensing)	15% up to 95%

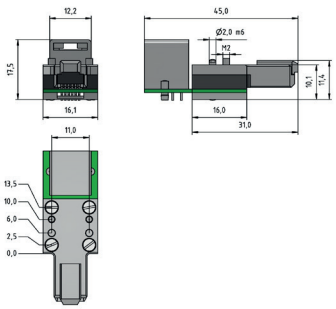

7130-RJ25-M-006 | STANDARD

Mating force (max)	35.0 N
Un-mating force (max)	25.0 N
Current (max) signal	0.75 A
Temperature range	0 °C up to 60 °C
Relative humidity (non-condensing)	15% up to 95%

L'IMPULSION
Retrouvez nous sur
www.limpulsion.fr

Test Connectors | USB

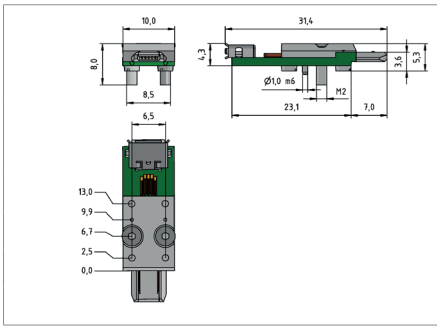

7110-MICRO.USB.B-M-005 | MICRO USB 2.0 - STANDARD

PWD data	90.0 Ohm
Mating Force (max)	35.0 N
Un-mating force (max)	25.0 N
Voltage (max)	30.0 V AC (rms)
Current (max) power	1.8 A
Temperature range	0 °C up to 60 °C

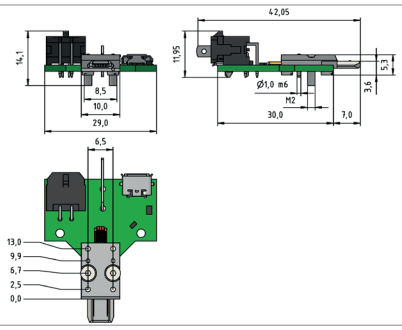

7111-MICRO.USB.B-M-005-HC | MICRO USB 2.0 - HIGH-CURRENT

PWD data	90.0 Ohm
Mating Force (max)	35.0 N
Un-mating force (max)	25.0 N
Voltage (max)	30.0 V AC (rms)
Current (max) power	1.8 A
Temperature range	0 °C up to 60 °C

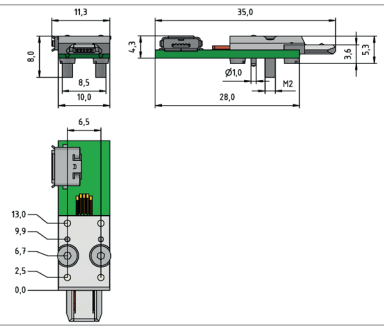

7112-MICRO.USB.B-M-005-R | MICRO USB 2.0 - RIGHT ANGLE

PWD data	90.0 Ohm
Mating Force (max)	35.0 N
Un-mating force (max)	25.0 N
Voltage (max)	30.0 V AC (rms)
Current (max) power	1.8 A
Temperature range	0 °C up to 60 °C

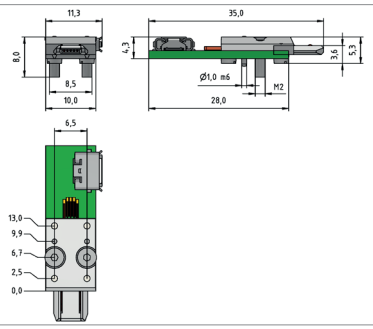

7113-MICRO.USB.B-M-005-L | MICRO USB 2.0 - LEFT ANGLE

PWD data	90.0 Ohm
Mating Force (max)	35.0 N
Un-mating force (max)	25.0 N
Voltage (max)	30.0 V AC (rms)
Current (max) power	1.8 A
Temperature range	0 °C up to 60 °C

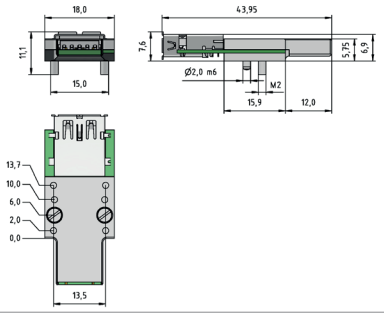

7114-USB-3.0A-M-009 | USB 3.0-A - STANDARD

PWD data	90.0 Ohm
Mating Force (max)	35.0 N
Un-mating force (max)	25.0 N
Voltage (max)	30.0 V AC (rms)
Current (max) power	1.8 A
Temperature range	0 °C up to 60 °C

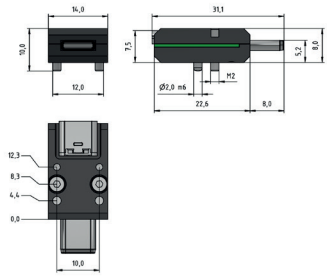

7115-USB-3.1C-M-024 | USB 3.1-C - STANDARD

PWD data	90.0 Ohm
Mating Force (max)	12.0 N
Un-mating force (max)	10.0 N
Voltage (max)	20.0 V AC (rms)
Current (max) power	1.25 A
Temperature range	0 °C up to 60 °C

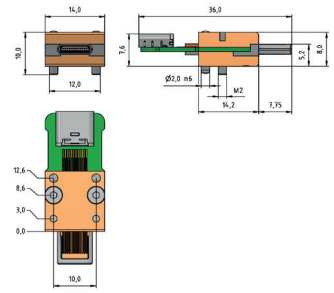

7116-USB-3.1C-M-024-LO | USB 3.1-C - LONG

PWD data	90.0 Ohm
Mating Force (max)	12.0 N
Un-mating force (max)	10.0 N
Voltage (max)	20.0 V AC (rms)
Current (max) power	1.25 A
Temperature range	0 °C up to 60 °C

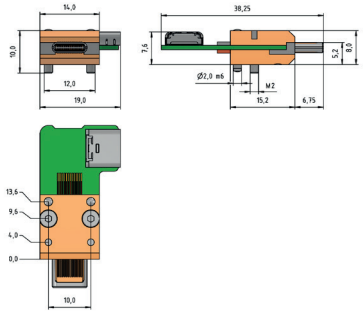

7117-USB-3.1C-M-024-L | USB 3.1-C - LEFT ANGLE

PWD data	90.0 Ohm
Mating Force (max)	12.0 N
Un-mating force (max)	10.0 N
Voltage (max)	20.0 V AC (rms)
Current (max) power	1.25 A
Temperature range	0 °C up to 60 °C

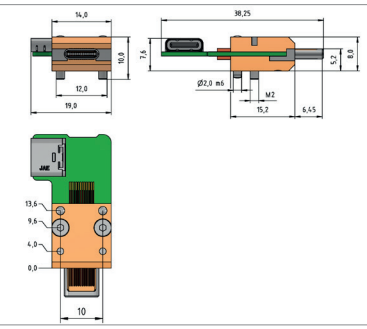

7118-USB-3.1C-M-024-R | USB 3.1-C - RIGHT ANGLE

PWD data	90.0 Ohm
Mating Force (max)	12.0 N
Un-mating force (max)	10.0 N
Voltage (max)	20.0 V AC (rms)
Current (max) power	1.25 A
Temperature range	0 °C up to 60 °C

L'IMPULSION
Retrouvez nous sur
www.limpulsion.fr

Test Connectors | HDMI and Display Port

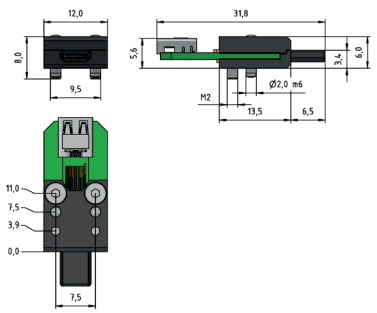

7150-MICRO.HDMI.D-M-019 | MICRO HDMI - TYPE D

Impedance	100.0 Ohm
Mating force (max)	7.0 N
Un-mating force (max)	4.0 N
Voltage (max)	30.0 V AC (rms)
Current (max) signal	0.25 A
Temperature range	0 °C up to 60 °C
Relative humidity (non-condensing)	15% up to 95%

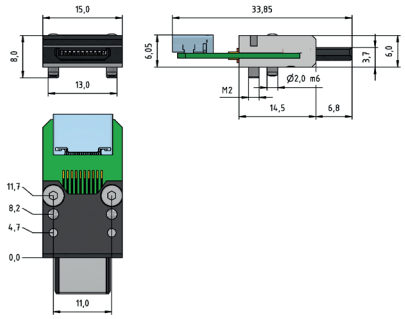

7151-MINI.HDMI.C-M-019 | MINI HDMI - TYPE C

Impedance	100.0 Ohm
Mating force (max)	14.0 N
Un-mating force (max)	10.0 N
Voltage (max)	30.0 V AC (rms)
Current (max) signal	0.25 A
Temperature range	0 °C up to 60 °C
Relative humidity (non-condensing)	15% up to 95%

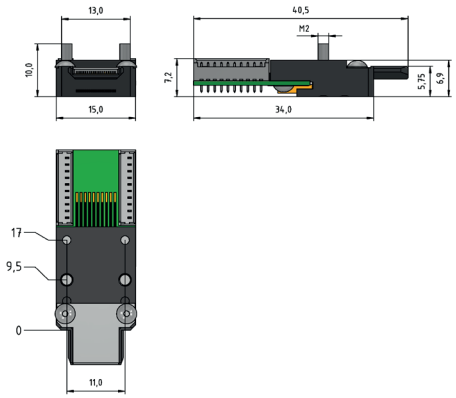

7152-MINI.HDMI.C-H-019-PH | MINI HDMI - TYPE C - PIN HEADERS

Mating force (max)	25.0 N
Un-mating force (max)	15.0 N
Voltage (max)	30.0 V AC (rms)
Current (max) signal	0.25 A
Temperature range	0 °C up to 60 °C
Relative humidity (non-condensing)	15% up to 95%

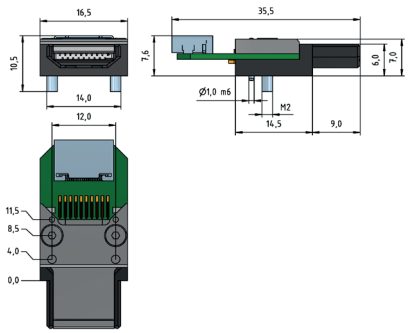

7153-HDMI.A-M-2.0 | HDMI TYPE A

Mating force (max)	45.0 N
Un-mating force (max)	25.0 N
Voltage (max)	40.0 V AC (rms)
Current (max) power	0.5 A
Current (max) signal	0.25 A
Temperature range	0 °C up to 60 °C
Relative humidity (non-condensing)	15% up to 95%

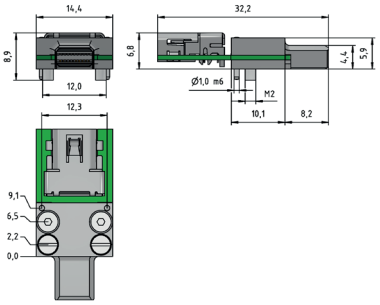

7154-MINI.DISPLAYPORT-M-20 | MINI DISPLAY PORT

Impedance	100.0 Ohm
Mating force (max)	44.0 N
Un-mating force (max)	40.0 N
Voltage (max)	40.0 V AC (rms)
Current (max) power	0.5 A
Current (max) signal	0.25 A
Temperature range	0 °C up to 60 °C
Relative humidity (non-condensing)	15% up to 95%

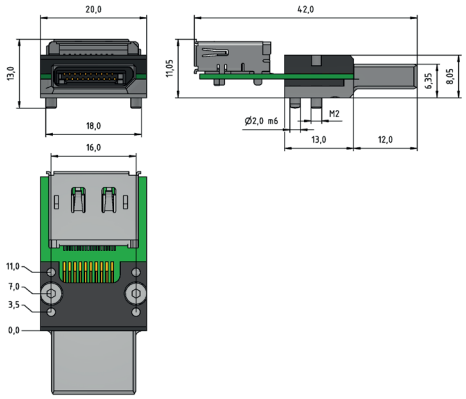

7155-DISPLAYPORT-M-20 | DISPLAY PORT

Impedance	100.0 Ohm
Mating force (max)	44.0 N
Un-mating force (max)	39.0 N
Voltage (max)	40.0 V AC (rms)
Current (max) power	0.5 A
Current (max) signal	0.25 A
Temperature range	0 °C up to 60 °C
Relative humidity (non-condensing)	15% up to 95%

L'IMPULSION
Retrouvez nous sur
www.limpulsion.fr

Test Connectors | MISC

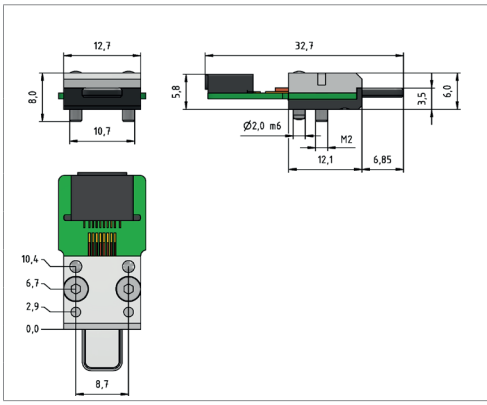

7141-LTNG-M-008 | STANDARD

Impedance	90.0 Ohm
Mating force (max)	18.0 N
Un-mating force (max)	12.0 N
Voltage (max)	20.0 V AC (rms)
Current (max) power	1.2 A
Current (max) signal	0.25 A
Temperature range	0 °C up to 60 °C
Relative humidity (non-condensing)	15% up to 95%

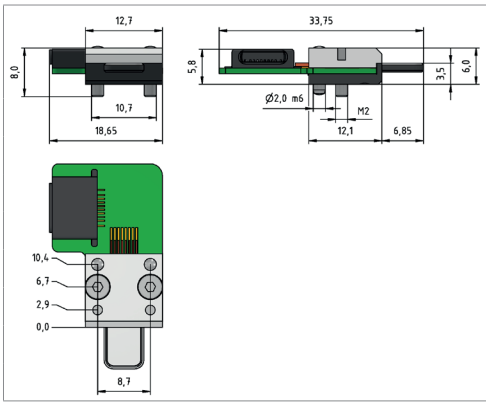

7142-LTNG-M-008-R | RIGHT ANGLE

Impedance	90.0 Ohm
Mating force (max)	18.0 N
Un-mating force (max)	12.0 N
Voltage (max)	20.0 V AC (rms)
Current (max) power	1.2 A
Current (max) signal	0.25 A
Temperature range	0 °C up to 60 °C
Relative humidity (non-condensing)	15% up to 95%

Test Connectors | Power and Audio

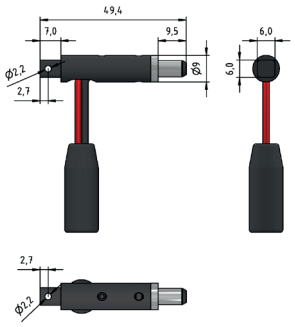

7120-DC-M-002 | DC - STANDARD

Voltage (max)	48.0 V
Current (max)	5.0 A
RoHS compliant	✓
Temperature range	0 °C up to 60 °C
Relative humidity (non-condensing)	< 85%

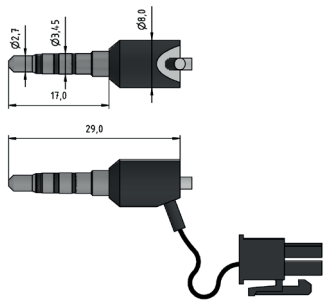

7121-3.5MM.AUDIO-M-002 | 3.5 MM AUDIO

Lead free	✓
RoHS konform	✓
Temperature range	0 °C up to 60 °C
Relative humidity (non-condensing)	< 85%

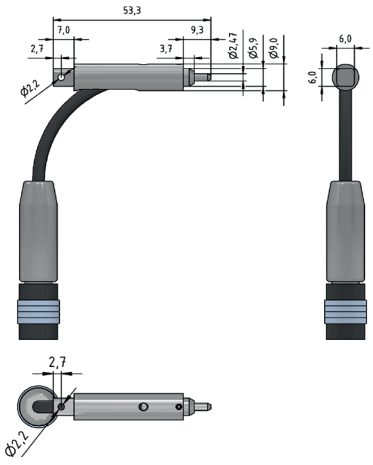

7122-TOSLINK-M-002 | TOSLINK - STANDARD

Lead free	✓
RoHS konform	✓
Temperature range	0 °C up to 60 °C
Relative humidity (non-condensing)	< 85%

L'IMPULSION Retrouvez nous sur www.limpulsion.fr

TOOLS AND ACCESSORIES

A wide range of accessories is available for the professional use of PTR HARTMANN test probes.



These include receptacle insertion tools for the ICT test probe range and test probes for use in test modules for cable tests. In addition, we offer screwing tools for our series of test probes with thread, also available as torque screwdrivers.

A spring force measuring device, especially suitable for use with the push-back probes needed for the cable test, completes this range. This device makes it possible to carry out the necessary monitoring of contact pressures and their constancy.

Tools

Insertion and Extraction Tools

for Test Probes

TEST PROBE TYPE	SMALLEST SPACING mm / mil	TIP STYLE DIAMETER (mm)	INSERTION TOOL	EXTRACTION TOOL
1008/E	1.27 / 50	< 0.5	WFE 1200/1008E	-
1010	1.91 / 75	0.9 ... 1.5*	WFEA 1015	WFEA 1015
1012/E	1.91 / 75	< 0.9	WFEA 1015	Flat-Nose-Pliers
1012/E	1.91 / 75	0.9 ... 2.0*	WFEA 1015	WFEA 1015
1015	2.54 / 100	< 0.9	WFEA 1015	Flat-Nose-Pliers
1015	2.54 / 100	0.9 ... 2.0*	WFEA 1015	WFEA 1015
1021, 2021	2.54 / 100	< 1.2	WFEA 1021	Flat-Nose-Pliers
1021, 2021	2.54 / 100	1.2 ... 2.0*	WFEA 1021	WFEA 1021
1025/E	2.54 / 100	< 1.1	WFEA 1025/E	Flat-Nose-Pliers
1025/E	2.54 / 100	1.1 ... 2.3*	WFEA 1025/E	WFEA 1025/E
1028, 2028	2.54 / 100	< 1.5	WFEA 1028	Flat-Nose-Pliers
1028, 2028	2.54 / 100	1.5 ... 2.0*	WFEA 1028	WFEA 1028
1029, 2029	2.54 / 100	< 1.5	WFEA 1028	Flat-Nose-Pliers
1029, 2029	2.54 / 100	1.5 ... 2.0*	WFEA 1028	WFEA 1028
1030	2.54 / 100	< 1.5	WFEA 1028	Flat-Nose-Pliers
1030	2.54 / 100	1.5 ... 2.0*	WFEA 1028	WFEA 1028
1041	4.00 / 160	< 2.0	WFEA 1050	Flat-Nose-Pliers
1041	4.00 / 160	2.0 ... 3.0*	WFEA 1050	WFEA 1050
1042	4.00 / 160	< 2.0	WFEA 1050	Flat-Nose-Pliers
1042	4.00 / 160	2.0 ... 3.0*	WFEA 1050	WFEA 1050
1050	4.00 / 160	< 2.0	WFEA 1050	Flat-Nose-Pliers
1050	4.00 / 160	2.0 ... 3.0*	WFEA 1050	WFEA 1050
1060	4.00 / 160	< 2.0	WFEA 1050	Flat-Nose-Pliers
1060	4.00 / 160	2.0 ... 3.0*	WFEA 1050	WFEA 1050
2053	2.54 / 100	< 1.5	WFEA 1028	Flat-Nose-Pliers
2053	2.54 / 100	1.5 ... 2.0*	WFEA 1028	WFEA 1028



* When to use bigger headdiameters please order for special tools!
When ordering please mention the test probe type!

Receptacle Insertion Tools

Metal Handle Design

RECEPTACLE	SLEEVE INSERTION TOOL	
	COMPLETE	INSERTION
H 1007	WHE 1200/07	WHE 1200/007
H 1008, H1008/E	WHE 1200/08	WHE 1200/008
H 1010	WHE 1200/12	WHE 1200/012
H 1012	WHE 1200/12	WHE 1200/012
H 1015, H 1015/G..	WHE 1200/15	WHE 1200/015
H 1021	WHE 1200/21	WHE 1200/021
H 1021/GV..	WHE 1200/21-V	WHE 1200/021-V
H 1025	WHE 1200/15	WHE 1200/015
H 1030	WHE 1200/30	WHE 1200/030
H 1050	WHE 1200/50	WHE 1200/050
H 1053/GRV, H1053/GVRV	WHE 1200/53-V	WHE 1200/053-V
H 1055	WHE 1200/55	WHE 1200/055
H 1070	WHE 1200/75	WHE 1200/075
H 1075, H 1075/G-L	WHE 1200/75	WHE 1200/075
H 1080/GR-L, H 1080/GR-M5	WHE 1200/80	WHE 1200/80
H 2021	WHE 1200/21	WHE 1200/021
H 2050	WHE 1200/50	WHE 1200/050
SK790	WHE 1200/790	WHE 1200/790



L'IMPULSION
Retrouvez nous sur
www.limpulsion.fr

Receptacles Tools | SK 790

Set Receptacle Extraction Tools - WA 834

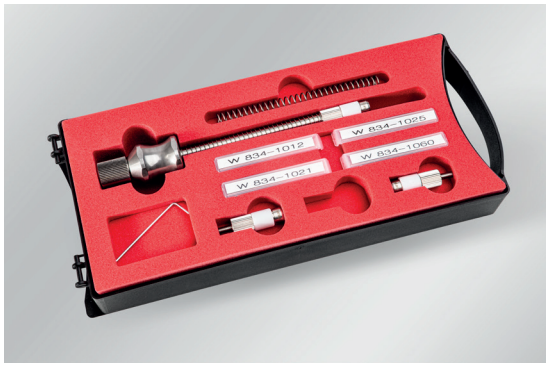

CONTENT
1 x basis tool WA 834 with standard spring 7.0 N
1 x allen key 1.3 mm for threaded probes
1 x stronger spring with spring force 14.0 N
3 x tool carrier for different inserts WA 834
3 x tool W834 1012 for receptacles H 1012/E
3 x tool W834 1021 for receptacles H 1021/G
3 x tool W834 1025 for receptacles H 1025/E
3 x tool W834 1060 for receptacles H 1060/G

Barrel Extraction Tools

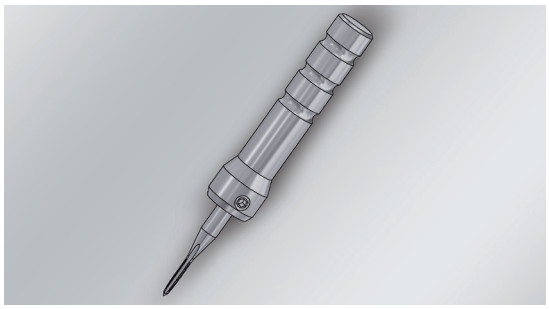

SERIES	BARREL EXTRACTION TOOL	
	COMPLETE	INSERTION
1004/E	WAG 834-1004	W 834-1004
1008/E	WAG 834-1008	W 834-G1008
1012/E	WAG 834-1012	W 834-G1012
1025/E	WAG 834-1025	W 834-G1025

Receptacle Extraction Tools



RECEPTACLE	TOOL
1004/E	W 834-1003
1008/E	W 834-1004
1012/E	W 834-1008
1025/E	W 834-1012

Receptacle Extraction Tools

Metal Handle Design

RECEPTACLE	SLEEVE EXTRACTION TOOL	
	COMPLETE	INSERTION
H 1008	WHA 1200/08	WHA 1200/008
H 1012	WHA 1200/12	WHA 1200/012
H 1025	WHA 1200/25	WHA 1200/025

SK 790

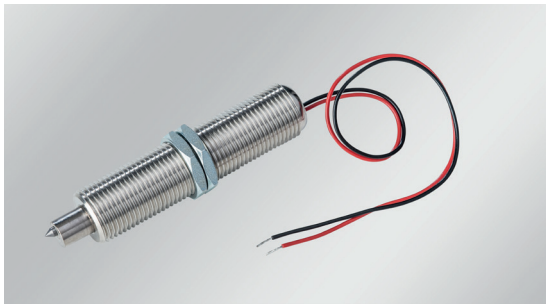

TECHNICAL DATA	
Full travel	2.00 mm
Working travel	1.50 mm
Pre-loaded spring force	0.55 N
Spring force at working travel	3.10 N
Maximale permanent load current	81 mA
Recommended marking impulse	ca. 1.0 s
Marked area	Ø 2.0 mm

PRODUCT PORTFOLIO

www.ptr-hartmann.com/testing-technology/



TEST PROBES FOR HIGH FREQUENCY APPLICATIONS

- PCB contacting
- Connector contacting
  - FAKRA | Mini FAKRA | SMA | …
- Test connector
  - RJ45 | USB Typ C | HDMI | …



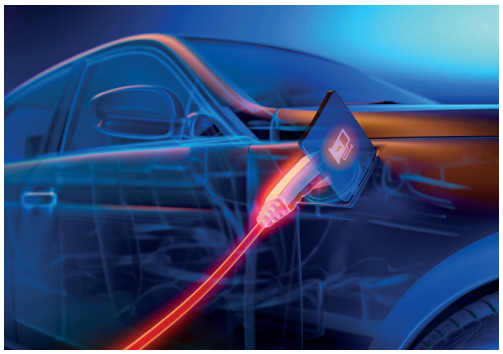

TEST PROBES FOR HIGH-CURRENT APPLICATIONS

- Battery cell contacting
- E-mobility
- Circuit breaker (IGBT)
- Renewable energies



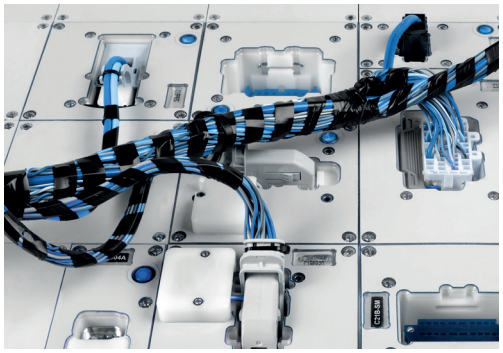

TEST PROBES FOR CABLE HARNESS TEST

- Threaded Probes
- Step Probes
- Switch Probes
- Push-Back Probes
- Twist-Proof Probes
- Coaxial Probes





SPRING-LOADED CONNECTORS

- Customized spring contact blocks
- Standard spring contact blocks
- Customized contact pins
- Standard contact pins



L'IMPULSION | Retrouvez nous sur www.limpulsion.fr

PTR HARTMANN

A Phoenix Mecano Company

PTR HARTMANN GmbH – a member of Switzerland's Phoenix Mecano AG – is an internationally present company with its home offices in Werne (North Rhine-Westphalia) and locations in Germany, Tunisia and China. With more than 60 years of experience, and based on "German Engineering", we develop, produce and market high-quality electrical components for optimised customer solutions in an extremely diverse range of applications throughout the entire world: these products include switches, high-precision test probes, inductances, interface-pin blocks, PCB terminal blocks/multi-connectors and integrated connection technology – with assured flexibility of production and highly efficient logistics.



GLOBAL MARKETING/SALES LOCATIONS

● = Marketing/sales centres

● = Production facilities

PTR HARTMANN GmbH
Gewerbehof 38
59368 Werne, Germany
Phone +49 2389 7988-0
info@ptr-hartmann.com

Branch Baiersdorf
Industriestraße 3
91083 Baiersdorf, Germany
Phone +49 9133 7793-0

Branch Grävenwiesbach
Auf der Struth 1
61279 Grävenwiesbach, Germany
Phone +49 2389 7988-0

www.ptr-hartmann.com