L'IMPULSION
Retrouvez nous sur
www.limpulsion.fr

PTR HARTMANN
A Phoenix Mecano Company



# TESTING TECHNOLOGY

**Quality Down to the Tiniest Detail**




# WE COMBINE PRECISION, INNOVATION AND RELIABILITY FOR YOUR BENEFIT.

**PTR HARTMANN is responding to the globalisation of markets with an expanded distribution network. In over 60 locations worldwide, qualified personnel ensure that our products and services are always available to customers.**

L'IMPULSION
Retrouvez nous sur
www.limpulsion.fr




## Areas of Operation

- Testing Technology
- Connection Technology
- Inductivities
- Switches
- DIN Rail Terminal Blocks

L'IMPULSION
Retrouvez nous sur
www.limpulsion.fr

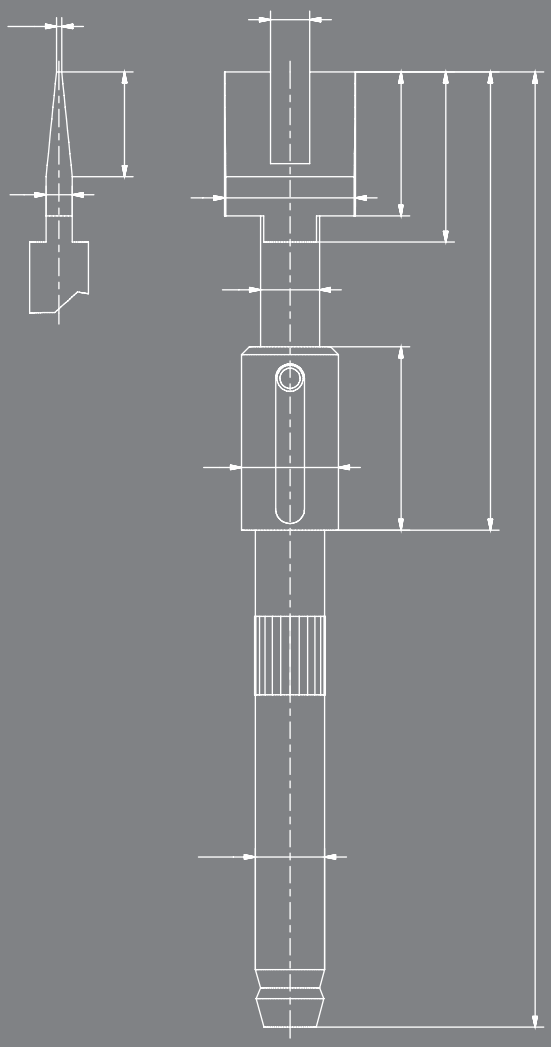

# INTRODUCTION

**Good functionality, a high level of efficiency, excellent precision and absolute reliability in our delivery performance:**
these factors are why customers worldwide are putting their faith in PTR HARTMANN products. We combine quality and reliability with the claim to provide optimal solutions for customer-specific requirements. For us, these features have a long tradition. Since 1979, alongside a constantly expanding range of products, they have played a major role in our becoming a modern global player in the electromechanical components sector. Today, the name of PTR stands for excellence and innovation in the field of terminal and testing technology. Our merger with the Swiss firm of
Phoenix Mecano in 1989 strengthened our worldwide presence. As a result, PTR HARTMANN terminal blocks, multi-connectors, test probes and DIN rail terminal blocks are now available in more than 50 countries.

**In addition, we set standards by using German engineering, high-quality materials, flexible production processes and intelligent logistics.**
Also, the areas of application for our test probes are extremely wide-ranging. In the sectors of telecommunications, medical technology, aeronautics and aerospace, the automotive industry and many others, PTR test probes are used as secure and reliable contact elements for testing PCBs (ICT+FT) and cable harnesses. One additional and steadily growing field of applications is the use of test probes as a charging contact for industrial applications or PCB connectors as a single contact or multi-pole contact block.

PTR responds to the constantly increasing demands of the market by presenting flexible and targeted solutions. The development and construction of connection technology for customer-oriented applications lead to permanent on-going development of our range of products. In these cases, professional concepts are developed jointly and implemented precisely in cooperation with our customers.

As a result of its work in the components sector, PTR has also acquired a great deal of competence and excellent know-how about plastic parts. All this experience has been used to develop a new range of products, and for some time interface blocks have added to and expanded this. They are used wherever rechargeable batteries in mobile devices such as scanners, card readers, communication devices and others need to be recharged. One example is e-bikes, in which the battery connections are used in the operating unit and the display. In addition they are found in LED lights in the shopfitting sector and for "smart home" solutions. Also, they are often used to connect two PCBs, and for both purposes they can be supplied, ready for use, in blister belts and trays.

**For us, on-going development of our products, in line with market requirements, is both a task and an obligation.**
The result is new applications for different test technology applications. Without doubt, one highlight is the wide range of high-frequency test probes used in the growing market for communication and in-car entertainment technology. Our HPL test probes were developed to deal with the special demands which the PCB test requires. The high level of spring pre-tension and the resulting high initial pressure lead to a reduction in pseudo errors in the ICT sector.

A company which offers first-class products and services cannot leave anything to chance, so the use of modern quality management systems is very important. In order to implement and achieve the above-mentioned goals, it is especially important for us to continue to expand these concepts of quality and to anchor them in a quality management system. To this end, the group and company management have decided to introduce a QM system according to EN IS0 9001 so that we can continue to satisfy both the high levels of market requirements and those of our customers.

**Success also means responsibility.**
PTR sees the relationship to the environment and the preservation of our habitat for future generations as an obligation. We document this with certification according to EN ISO 14001. Of course, we also comply with EU directives such as ROHS2 (2011/65/EU) and REACH (1907/2006/EC) in their current versions.

All the information in this catalogue has been compiled to the best of our knowledge and belief and is correct at the time of going to print. Up-to-date information is always available on our PTR HARTMANN website at www.ptr-hartmann.com.

L'IMPULSION Retrouvez nous sur www.limpulsion.fr

# Content


| CONTENT | PAGE |
|---|---|
| PHOENIX MECANO AG | 10 |
| TECHNICAL COMPENDIUM | 14 |
| Design and Structure | 14 |
| Materials and Coatings | 16 |
| Receptacles and Assembly | 18 |
| Lateral Play | 20 |
| Quality and Operation Life | 20 |
| Highlights | 21 |
| TIP STYLES | 22 |
| ARTICLE DESIGNATION | 24 |
| PTR HARTMANN WEBSITE | 26 |

| | SERIES | CENTER | EXTENSION HEIGHT mm / INCHES | WORKING TRAVEL mm / INCHES | MAX. TRAVEL mm / INCHES | PAGE |
|---|---|---|---|---|---|---|
| 1 | **TEST PROBES FOR SMALL CENTER** | | | | | **30** |
| | 1001 | 30 mil / 0.76 mm | 5.50 / .217 | 1.35 / .053 | 2.00 / .079 | 30 |
| | 1002 | 40 mil / 1.02 mm | 5.30 / .209 | 1.35 / .053 | 2.00 / .079 | 31 |
| | 1003 | 40 mil / 1.02 mm | 3.70 / .146 | 1.00 / .039 | 1.30 / .051 | 32 |
| | 1005 | 40 mil / 1.02 mm | 10.50 / .413 | 3.00 / .118 | 3.80 / .149 | 33 |
| | 1006 | 40 mil / 1.02 mm | 13.33 / .525 | 1.27 / .500 | 2.29 / .090 | 34 |
| | **STANDARD TEST PROBES** | | | | | **36** |
| 2 | **STANDARD TEST PROBES CENTER ≤ 100 mil / 2.54 mm** | | | | | **36** |
| | 1007 | 50 mil / 1.27 mm | 6.70 / .264 | 2.40 / .095 | 2.80 / .110 | 38 |
| | 1007.50 | 50 mil / 1.27 mm | 5.50 / .216 | 1.35 / .053 | 2.00 / .079 | 39 |
| | 1007.60 | 50 mil / 1.27 mm | 6.05 / .238 | 2.54 / .100 | 2.54 / .100 | 40 |
| | 1007.70 | 50 mil / 1.27 mm | 6.00 / .236 | 1.27 / .050 | 1.27 / .050 | 41 |
| | 1010 | 75 mil / 1.91 mm | 8.30 / .327 | 2.40 / .095 | 3.00 / .118 | 42 |
| | 1010.50 | 75 mil / 1.91 mm | 6.54 / .258 | 2.54 / .100 | 2.54 / 1.00 | 43 |
| | 1011 | 75 mil / 1.91 mm | 8.20 / .323 | 4.20 / .165 | 4.20 / .165 | 44 |
| | 1015 | 100 mil / 2.54 mm | 12.80 / .504 | 3.50 / .138 | 4.40 / .173 | 45 |
| | 1015.50 | 100 mil / 2.54 mm | 8.70 / .342 | 4.20 / .165 | 4.20 / .165 | 46 |
| | 1016 | 100 mil / 2.54 mm | 12.80 / .504 | 3.50 / .138 | 4.40 / .173 | 47 |
| | 1018 | 100 mil / 2.54 mm | 13.30 / .484 | 3.50 / .138 | 4.40 / .173 | 48 |
| | 1018.06 | 100 mil / 2.54 mm | 12.00 / .472 | 2.70 / .106 | 4.10 / .161 | 49 |
| 3 | **STANDARD TEST PROBES CENTER > 100 mil / 2.54 mm** | | | | | **50** |
| | 1030 | 125 mil / 3.18 mm | 16.30 / .642 | 5.00 / .197 | 6.30 / .248 | 52 |
| | 1054 | 138 mil / 3.50 mm | 17.00 / .669 | 5.10 / .201 | 6.40 / .252 | 53 |
| | 1040 | 160 mil / 4.00 mm | 19.60 / .665 | 4.40 / .173 | 5.50 / .217 | 54 |
| | 1050 | 160 mil / 4.00 mm | 10.70 / .421 | 4.40 / .173 | 5.50 / .217 | 55 |
| | 1060 | 160 mil / 4.00 mm | 10.70 / .421 | 4.40 / .173 | 5.50 / .217 | 56 |
| | 1051 • 1061 | 160 mil / 4.00 mm | 10.20 / .638 | 5.60 / .221 | 7.00 / .276 | 57 |
| | 1041 • 1041/W | 177 mil / 4.50 mm | 11.05 / .435 | 4.80 / .189 | 6.00 / .236 | 58 |
| | 1042 | 177 mil / 4.50 mm | 13.30 / .524 | 5.60 / .221 | 7.00 / .276 | 59 |
| | 1055 | 177 mil / 4.50 mm | 16.50 / .650 | 5.10 / .201 | 6.40 / .252 | 60 |
| | **ICT TEST PROBES** | | | | | **62** |
| 4 | **E-SERIE** | | | | | **62** |
| | 1004/E | 40 mil / 1.00 mm | 16.00 / .630 | 4.30 / .169 | 6.40/.252 | 64 |
| | 1008/E | 50 mil / 1.27 mm | 16.00 / .630 | 4.30 / .169 | 6.40/.252 | 65 |
| | 1008/E.50 | 50 mil / 1.27 mm | 21.30 / .829 | 8.00 / .315 | 10.00/.394 | 66 |
| | 1012/E | 75 mil / 1.91 mm | 16.00 / .630 | 4.30 / .169 | 6.40/.252 | 67 |
| | 1013/Z | 75 mil / 1.91 mm | 21.20 / .835 | 9.60 / .378 | 12.00/.472 | 68 |
| | 1025/E | 100 mil / 2.54 mm | 16.30 / .642 | 4.30 / .169 | 6.40/.252 | 69 |
| | 1034/E | 100 mil / 2.54 mm | 19.90 / .783 | 8.00 / .315 | 10.00 / .394 | 70 |
| | 1036 | 100 mil / 2.54 mm | 19.50 / .768 | 9.60 / .378 | 12.00 / .472 | 71 |
| | 2021 • 1021 | 100 mil / 2.54 mm | 10.50 / .413 | 4.00 / .157 | 5.30 / .209 | 72 |
| | 2024 • 1024 | 100 mil / 2.54 mm | 16.20 / .638 | 8.00 / .315 | 10.00 / .394 | 73 |
| | 2028 • 1028 | 100 mil / 2.54 mm | 10.50 / .413 | 4.00 / .157 | 5.30 / .209 | 74 |
| | 2029 | 100 mil / 2.54 mm | 16.20 / .638 | 6.40 / .252 | 8.00 / .315 | 75 |
| | Receptacles 1012 | | | | | 76 |
| | Receptacles 1025 | | | | | 77 |


L'IMPULSION Retrouvez nous sur www.limpulsion.fr

| | SERIES | CENTER | EXTENSION HEIGHT mm / INCHES | WORKING TRAVEL mm / INCHES | MAX. TRAVEL mm / INCHES | PAGE |
|---|---|---|---|---|---|---|
| 5 | **HPL TEST PROBE WITH HIGH PRE-LOADED SPRING FORCE** | | | | | **78** |
| | 1008/E | 50 mil / 1.27 mm | 16.00 / .630 | 4.30 / .169 | 6.40 / .252 | 80 |
| | 1012/E | 75 mil / 1.91 mm | 16.00 / .630 | 4.30 / .169 | 6.40 / .252 | 81 |
| | 1025/E | 100 mil / 2.54 mm | 16.30 / .642 | 4.30 / .169 | 6.40 / .252 | 82 |
| 6 | **ROTATING TEST PROBES** | | | | | **84** |
| | 1008/D | 50 mil / 1.27 mm | 16.00 / .630 | 4.30 / .169 | 6.40 / .252 | 86 |
| | 1012/D | 75 mil / 1.91 mm | 16.00 / .630 | 4.30 / .169 | 6.40 / .252 | 87 |
| | 1025/D | 100 mil / 2.54 mm | 16.00 / .630 | 4.30 / .169 | 6.40 / .252 | 88 |
| 7 | **FLYING PROBES** | | | | | **90** |
| | 5248/G | 100 mil / 2.54 mm | 19.60 / .665 | 6.40 / .252 | 8.00 / .315 | 92 |
| | 5257/G | 100 mil / 2.54 mm | 14.60 / .576 | 4.00 / .157 | 5.30 / .209 | 93 |
| 8 | **TEST PROBES WITH THREAD** | | | | | **94** |
| | 1007/G | 50 mil / 1.27 mm | 10.50 / .413 | 4.00 / .157 | 5.00 / .196 | 96 |
| | 1010/G | 75 mil / 1.91 mm | 8.30 / .327 | 2.40 / .095 | 3.00 / .118 | 97 |
| | 1012/G | 75 mil / 1.91 mm | 10.50 / .327 | 4.30 / .169 | 6.40 / .252 | 98 |
| NEW | 1012/G for Position Test | 75 mil / 1.91 mm | see Product Page | 4.30 / .169 | 6.40 / .252 | 99 |
| | 1015/G | 100 mil / 2.54 mm | 12.80 / .504 | 3.50 / .138 | 4.40 / .173 | 100 |
| | 1015/G for Position Test | 100 mil / 2.54 mm | see Product Page | 3.50 / .138 | 4.40 / .173 | 101 |
| | 1021/G | 100 mil / 2.54 mm | 10.50 / .413 | 4.00 / .157 | 5.30 / .209 | 102 |
| | 1021/G for Position Test | 100 mil / 2.54 mm | see Product Page | 4.00 / .157 | 5.30 / .209 | 103 |
| | 1021/GT for Position Test | 100 mil / 2.54 mm | see Product Page | 4.00 / .157 | 5.00 / .196 | 104 |
| | 1028/G | 100 mil / 2.54 mm | 10.50 / .413 | 4.00 / .157 | 5.30 / .209 | 105 |
| | 5310/G | 100 mil / 2.54 mm | 8.70 / .343 | 3.50 / .138 | 4.50 / .177 | 106 |
| | 1060/G | 160 mil / 4.00 mm | 10.70 / .421 | 4.40 / .173 | 5.50 / .216 | 107 |
| | 1060/G for Position Test | 160 mil / 4.00 mm | see Product Page | 4.40 / .173 | 5.50 / .216 | 108 |
| | 1060/GT for Position Test | 160 mil / 4.00 mm | see Product Page | 4.00 / .157 | 5.00 / .196 | 109 |
| | 1061/G | 160 mil / 4.00 mm | 16.20 / .638 | 5.60 / .221 | 7.00 / .276 | 110 |
| | 5110/G | 160 mil / 4.00 mm | 7.30 / .287 | 2.80 / .110 | 3.50 / .138 | 111 |
| | 1042/G | 177 mil / 4.50 mm | 13.30 / .524 | 5.60 / .221 | 6.00 / .236 | 112 |
| | Receptacles 1021/G | | | | | 113 |
| | Receptacles 1060/G | | | | | 114 |
| 9 | **NON-ROTATING TEST PROBES** | | | | | **116** |
| | 2053 | 100 mil / 2.54 mm | 18.20 / .717 | 4.00 / .157 | 5.00 / .197 | 118 |
| | 1053 | 197 mil / 5.00 mm | 16.20 / .638 | 4.00 / .157 | 5.00 / .197 | 119 |
| | 1021/GV | 100 mil / 2.54 mm | 10.50 / .413 | 4.00 / .157 | 4.30 / .169 | 120 |
| | 1053/G | 160 mil / 4.00 mm | 13.20 / .520 | 4.00 / .157 | 5.00 / .197 | 121 |
| | **SWITCHING TEST PROBES** | | | | | **122** |
| 10 | **SWITCHING TEST PROBES WITHOUT THREAD** | | | | | **122** |
| | 3035 | 75 mil / 1.91 mm | 9.30 / .367 | 4.00 / .157 | 5.00 / .197 | 124 |
| | 3020/2 | 100 mil / 2.54 mm | 9.50 / .374 | 4.00 / .157 | 5.30 / .209 | 125 |
| | 3026/2W | 100 mil / 2.54 mm | 10.20 / .402 | 4.00 / .157 | 5.30 / .209 | 126 |
| | 3030 | 100 mil / 2.54 mm | 16.40 / .646 | 5.00 / .197 | 6.30 / .248 | 127 |
| | 3003 | 125 mil / 3.18 mm | 16.00 / .630 | 5.00 / .197 | 7.50 / .295 | 128 |
| | 3010/2 • 3010/10 | 160 mil / 4.00 mm | 10.20 / .402 | 4.00 / .157 | 5.00 / .197 | 129 |
| | 3010/2F | 160 mil / 4.00 mm | 10.20 / .402 | 4.00 / .157 | 5.00 / .197 | 130 |
| | 3010/2W | 160 mil / 4.00 mm | 10.20 / .402 | 4.00 / .157 | 5.00 / .197 | 131 |
| | 3010/2V | 160 mil / 4.00 mm | 10.20 / .402 | 4.00 / .157 | 5.00 / .197 | 132 |
| | 3015.06 | 265 mil / 6.50 mm | 1.40 / .055 | 1.20 / .047 | 1.40 / .055 | 133 |
| 11 | **SWITCHING TEST PROBES WITH THREAD** | | | | | **134** |
| NEW | 3035/GW | 75 mil / 1.91 mm | 10.20 / .402 | 4.00 / .157 | 5.00 / .197 | 136 |
| | 3020/2G | 100 mil / 2.54 mm | 9.50 / .374 | 4.00 / .157 | 5.30 / .209 | 137 |
| | 3020/2GW5 | 100 mil / 2.54 mm | 9.50 / .374 | 4.00 / .157 | 5.30 / .209 | 138 |
| | 3023/2GS | 100 mil / 2.54 mm | 10.40 / .410 | 4.00 / .157 | 5.00 / .197 | 139 |
| | 3024/2G | 100 mil / 2.54 mm | 9.20 / .362 | 4.00 / .157 | 5.00 / .197 | 140 |
| | 3030/GW3 | 100 mil / 2.54 mm | 16.40 / .645 | 5.00 / .197 | 6.30 / .248 | 141 |
| | 3010/2G • 3010/10G | 160 mil / 4.00 mm | 10.20 / .402 | 4.00 / .157 | 5.00 / .197 | 142 |
| | 3010/2GW(5) | 160 mil / 4.00 mm | 10.20 / .402 | 4.00 / .157 | 5.00 / .197 | 143 |
| | 3011/2GS | 160 mil / 4.00 mm | 10.20 / .402 | 4.00 / .157 | 5.00 / .197 | 144 |
| | 3011/2FGS | 160 mil / 4.00 mm | 10.20 / .402 | 4.00 / .157 | 5.00 / .197 | 145 |


L'IMPULSION Retrouvez nous sur www.limpulsion.fr

# Content


| | SERIES | CENTER | EXTENSION HEIGHT mm / INCHES | WORKING TRAVEL mm / INCHES | MAX. TRAVEL mm / INCHES | PAGE |
|---|---|---|---|---|---|---|
| | 3012/2GS | 138 mil / 3.50 mm | 10.20 / .402 | 4.00 / .157 | 4.20 / .165 | 146 |
| | 3012/2GS • FS1/FLS1 | 138 mil / 3.50 mm | 10.20 / .402 | 4.00 / .157 | 4.50 / .177 | 147 |
| NEW | 3012/2GSL | 138 mil / 3.50 mm | 17.00 / .669 | 9.00 / .354 | 11.00 / .433 | 148 |
| | 3014/2G | 160 mil / 4.00 mm | 9.20 / .362 | 4.00 / .157 | 5.00 / .197 | 149 |
| NEW | 3212/2GS | 138 mil / 3.50 mm | 10.20 / .402 | 3.00 / .118 | 5.00 / .197 | 150 |
| | 3214/2GW | 160 mil / 4.00 mm | 9.20 / .362 | 3.00 / .118 | 5.00 / .197 | 151 |
| | 3015/G | 300 mil / 7.50 mm | 1.10 / .043 | 0.80 / .003 | 1.00 / .039 | 152 |
| **12** | **PUSH-BACK TEST PROBES** | | | | | **154** |
| | 3028.01 | 100 mil / 2.54 mm | 17.80 / .700 | 4.00 / .157 | 5.00 / .197 | 156 |
| | 5203 | 100 mil / 2.54 mm | 40.50 / 1.608 | 5.00 / .197 | 5.50 / .216 | 157 |
| | 5265 | 118 mil / 3.00 mm | 40.50 / 1.594 | 5.00 / .197 | 5.50 / .216 | 158 |
| | 5087 | 160 mil / 4.00 mm | 23.50 / .925 | 9.50 / .374 | 10.00 / .394 | 159 |
| | 5104 | 160 mil / 4.00 mm | 34.90 / 1.374 | 5.00 / .197 | 7.00 / .276 | 160 |
| **13** | **HIGH-CURRENT TEST PROBES** | | | | | **162** |
| | 1021 • 1021/G | 100 mil / 2.54 mm | 10.50 / .413 | 4.00 / .157 | 5.30 / .209 | 164 |
| | 5310/G | 100 mil / 2.54 mm | 8.70 / .343 | 3.50 / .138 | 4.50 / .177 | 165 |
| | 5110/S • 5110/G | 160 mil / 4.00 mm | 7.40 / .291 | 2.80 / .110 | 3.50 / .138 | 166 |
| | 1060 • 1060/G | 160 mil / 4.00 mm | 10.70 / .421 | 4.40 / .173 | 5.50 / .216 | 167 |
| | 1075 • 1075/G | 197 mil / 5.00 mm | 10.80 / .425 | 4.40 / .173 | 5.50 / .216 | 168 |
| NEW | 1078/G | 250 mil / 6.35 mm | 10.80 / .425 | 4.40 / .173 | 5.50 / .216 | 169 |
| | 1080/G | 300 mil / 7.60 mm | 10.80 / .425 | 4.40 / .173 | 5.50 / .216 | 170 |
| **14** | **PNEUMATIC TEST PROBES** | | | | | **172** |
| | 4006 | 118 mil / 3.00 mm | 5.50 / .217 | 6.00 / .236 | 10.00 / .394 | 174 |
| | 4005 | 138 mil / 3.50 mm | 5.50 / .217 | 6.00 / .236 | 10.00 / .394 | 175 |
| | 4004 | 160 mil / 4.00 mm | 5.50 / .217 | 6.00 / .236 | 10.00 / .394 | 176 |
| | 4034 | 160 mil / 4.00 mm | 10.50 / .413 | 4.00 / .157 | 5.30 / .209 | 177 |
| | 4004/G | 160 mil / 4.00 mm | 8.50 / .338 | 6.00 / .236 | 10.00 / .394 | 178 |
| | Pneumatic Accessories | | | | | 179 |
| **15** | **BATTERY TEST PROBES** | | | | | **180** |
| | 1064 | 100 mil / 2.54 mm | 8.11 / .083 | 1.27 / .050 | 1.27 / .050 | 182 |
| | 5303 | 100 mil / 2.54 mm | --- | 0.70 / .027 | 1.40 / .055 | 183 |
| NEW | 5303/LR01 | 100 mil / 2.54 mm | --- | 0.70 / .027 | 1.40 / .055 | 184 |
| NEW | 5303/T01 | 100 mil / 2.54 mm | --- | 0.70 / .027 | 1.40 / .055 | 185 |
| | 5305 | 100 mil / 2.54 mm | --- | --- | 1.00 / .039 | 186 |
| | 5099 | 118 mil / 3.00 mm | 5.10 / .200 | 1.00 / .039 | 1.20 / .047 | 187 |
| | 5099.04 | 118 mil / 3.00 mm | 5.70 / .224 | 3.30 / .130 | 4.00 / .157 | 188 |
| | 5099.43 | 138 mil / 3.50 mm | 5.30 / .118 | 3.30 / .130 | 4.00 / .157 | 189 |
| | 5110/S | 160 mil / 4.00 mm | 7.40 / .291 | 2.80 / .110 | 3.50 / .138 | 190 |
| | 5082 | 256 mil / 6.50 mm | 7.00 / .276 | 3.20 / .126 | 4.00 / .157 | 191 |
| | 5082.01 | 256 mil / 6.50 mm | 7.00 / .276 | 4.00 / .157 | 5.00 / .197 | 192 |
| | 5082/L | 256 mil / 6.50 mm | 12.00 / .472 | 8.00 / .315 | 10.00 / .394 | 193 |
| **16** | **INTERFACE PIN BLOCKS** | | | | | **194** |
| | FKB5322 - SMD - vertical | 100 mil / 2.54 mm | --- | 0.70 / .027 | 1.40 / .055 | 196 |
| | PKB5322 - SMD - vertical | 100 mil / 2.54 mm | --- | 0.70 / .027 | 1.40 / .055 | 197 |
| NEW | FKB5322 - L01 - vertical | 100 mil / 2.54 mm | --- | 0.70 / .027 | 1.40 / .055 | 198 |
| NEW | FKB5322 - T01 - vertical | 100 mil / 2.54 mm | --- | 0.70 / .027 | 1.40 / .055 | 199 |
| NEW | FKB5458 - SMD - vertical | 50 mil / 1.27 mm | --- | 0.70 / .027 | 1.40 / .055 | 200 |
| NEW | FKB5457 - SMD - horizontal | 100 mil / 2.54 mm | --- | 1.50 / .060 | 2.00 / .079 | 201 |
| **17** | **COAXIAL TEST PROBES** | | | | | **202** |
| | 5207 | 256 mil / 6.50 mm | 7.80 / .307 | 3.00 / .118 | 3.50 / .138 | 204 |
| | 5207/G | 256 mil / 6.50 mm | 7.80 / .307 | 3.00 / .118 | 3.50 / .138 | 205 |


L'IMPULSION
Retrouvez nous sur
www.limpulsion.fr

| | SERIES | CENTER | EXTENSION HEIGHT mm / INCHES | WORKING TRAVEL mm / INCHES | MAX. TRAVEL mm / INCHES | PAGE |
|---|---|---|---|---|---|---|
| 18 | **HIGH FREQUENCY TEST PROBES** | | | | | **206** |
| NEW | 7890 - Z1<br>MINI FAKRA Plug | --- | 14.30 / .563 | 4.00 / .157 | 5.00 / .197 | 208 |
| NEW | 7890 - Z2<br>MINI FAKRA Socket | --- | 11.90 / .468 | 0.30 / .012 | 2.00 / .079 | 209 |
| | 7840 • 7840/G - Z51<br>PCB Contact (GSG) | --- | 12.90 / .508 | 1.00 / .039 | 1.50 / .059 | 210 |
| | 7860 • 7860/G - Z1<br>MM8130 • MM8430 • MS156 | --- | 16.90 / .665 | 2.00 / .079 | 3.70 / .146 | 211 |
| | 7860 • 7860/G - Z2<br>MM8130 • MM8430 • MS156 | --- | 11.90 / .468 | 2.00 / .079 | 3.70 / .146 | 212 |
| | 7860 • 7860/G - Z3<br>U.FL-m | --- | 11.90 / .468 | 2.00 / .079 | 3.70 / .146 | 213 |
| | 7860 • 7860/G - Z4<br>R-SMA-m | --- | 14.10 / .555 | 2.00 / .079 | 3.70 / .146 | 214 |
| | 7860 • 7860/G - Z5<br>MCX-f | --- | 11.90 / .468 | 2.00 / .079 | 3.70 / .146 | 215 |
| | 7860 • 7860/G - Z6<br>SMA-f | --- | 14.10 / .555 | 2.00 / .079 | 3.70 / .146 | 216 |
| | 7860 • 7860/G - Z7<br>SMB-m | --- | 13.25 / .522 | 2.00 / .079 | 3.70 / .146 | 217 |
| | 7860 • 7860/G - Z8<br>SMB-f | --- | 11.90 / .468 | 2.00 / .079 | 3.70 / .146 | 218 |
| | 7860 • 7860/G - Z9<br>SMC-m | --- | 11.90 / .468 | 2.00 / .079 | 3.70 / .146 | 219 |
| | 7860 • 7860/G - Z25<br>FAKRA Plug | --- | 12.10 / .476 | 2.00 / .079 | 3.70 / .146 | 220 |
| | 7860 • 7860/G - Z20<br>FAKRA Socket | --- | 12.30 / .484 | 2.00 / .079 | 3.70 / .146 | 221 |
| 19 | **FIXTURE CUSTOMIZING** | | | | | **222** |
| | 1016 | 100 mil / 2.54 mm | see Product Page | --- | 3.10 / .122 | 224 |
| | 1025.21 | --- | --- | 4.40 / .173 | 4.80 / .189 | 225 |
| | IF Contacts | --- | --- | --- | --- | 226 |
| | SK 790 - Marker Probe | --- | --- | 1.50 / .059 | 2.00 / .079 | 227 |
| 20 | **TOOLS** | | | | | **228** |

| CONTENT | PAGE |
|---|---|
| **REPRESENTATIONS** | **238** |
| **International** | 238 |
| **Germany** | 239 |
| **SERIES INDEX** | **240** |
| **IMPRINT** | **242** |


L'IMPULSION Retrouvez nous sur www.limpulsion.fr

# PHOENIX MECANO AG

The Group Phoenix Mecano is a global player in the enclosures and industrial components segments, has a streamlined operating structure and is a leader in many markets. Geared towards the professional and cost-effective manufacture of niche products, it helps to ensure the smooth operation of processes and connections in the machine industry and industrial electronics. Its products are used in the mechanical engineering, measurement and control technology, alternative energy, medical technology, aerospace technology and home and hospital care sectors, amongst others.



## Enclosures

Phoenix Mecano enclosures protect all types of electronic and electrical equipment, offering exactly the kind of protection the customer requires.

Areas of application include plant engineering, railway, automotive and medical technology and offshore oil platforms. In addition to enclosures, Phoenix Mecano also supplies input units such as membrane keyboards and keypads, short-stroke keys, capacitive buttons and touchscreens.



## Mechanical Components

This division's wide range of linear actuators, electric cylinders and lifting columns are deployed in industry, workstation installation and the home and hospital care sector.

Its profile assembly systems can be used to assemble peripheral production systems right through to entire production lines.



## ELCOM/EMS

The ELCOM/EMS division's products are used wherever electrical energy flows, whether it be high, medium or low voltage, alternating or direct current.

They can be found in all industrial sectors, from medical technology, astrophysics and aerospace, to power distribution networks, switchgear and renewable energy.

L'IMPULSION | Retrouvez nous sur www.limpulsion.fr

# STRONG TOGETHER – PRODUCTS OF OUR GROUP OF COMPANIES

PTR

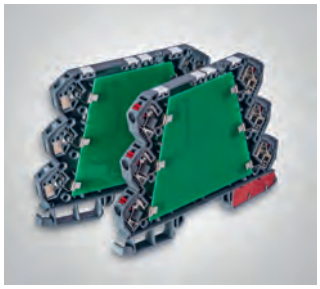

HARTMANN



HARTU



ATON



BOPLA



DEWERT OKIN



HARTMANN ELECTRONIC



ISMET



KUNDISCH



PHOENIX MECANO
DIGITAL ELEKTRONIK



REDUR



RK ROSE+KRIEGER



ROSE



WIENER



L'IMPULSION
Retrouvez nous sur
www.limpulsion.fr



**Phoenix Mecano-Group**

**Gross Sales**

**approx. 650.8 million EUR***

**Employees**

**approx. 7.316 Employees***

# PHOENIX MECANO GROUP LOCATIONS AROUND THE WORLD

*The numbers relate to 2018.

You can find current figures on our Website: www.phoenix-mecano.com

L'IMPULSION | Retrouvez nous sur www.limpulsion.fr



## North | South America

**USA**:
Orlando, Florida
Springfield, Ohio
Shannon, Mississippi
Frederick, Maryland
Chino, Kalifornien
**Brasilien**: Barueri
**Uruguay**: Montevideo

## Europe | Africa

**Great Britain**: Aylesbury
**Spain**: Zaragoza
**France**: Fontenay-sous-Bois
**Benelux**:
Deinze, Belgien
Doetinchem, Netherlands
Enschede, Netherlands
**Scandinavia**:
Odense, Denmark
Ingelstad, Sweden

**Germany**:
Alsdorf, Baiersdorf, Breitenguess-bach, Bünde, Burscheid, Grävenwiesbach, Kirchlengern, Minden, Niederzier , Porta Westfalica, Salem-Neufrach, Stuttgart, Villingen-Schwenningen, Werne, St. Wendel, Wessling, Wutha-Farnroda
**Switzerland**: Stein am Rhein
**Czechia**: Běhařovice
**Tunesia**:
Ben Arous, Borj-Cedria, Bouhejba-Zaghouan
**Marocco**: Tétouan
**Italy**: Inzago
**Austria**: Wien
**Hungary**: Kecskemét
**Romania**: Sibiu

## Asien

**Turkey**: Ankara
**Russia**: Moskau
**United Arab Emirates**: Sharjah
**Saudi-Arabia:** Dammam
**India**: Pune
**Singapore:** Singapore
**People's Republic of China**:
Dongguan, Kwun Tong (Hong Kong), Jiaxing, Shenzhen, Schanghai, Taicang
**Taiwan**: Taipei
**Korea (South Korea)**: Busan

## Australia

**Australia**: Victoria

L'IMPULSION
Retrouvez nous sur
www.limpulsion.fr

# Design and Structure

## Application Areas

Test Probes are used in the manufacture of electronic products to test PCBs. When fitted in test adapters, they carry out in-circuit tests and function tests. The aim is to optimize production by raising quality and reducing costs, factors which are caused by faulty components.

The test probe also plays an important part in the automotive industry, where it is used in test modules for testing connectors in cable harnesses. This means that the test probe is an important link in meeting the high quality standards found in automobile manufacture.

Interface Pin Blocks create an electrical contact between two components. As battery probes, they are used, for example, wherever it is necessary to charge the rechargeable batteries in mobile devices such as scanners, card readers, communication devices, etc.

The special design of the test probes which are used here adapts perfectly to an extremely wide range of contact situations. The probes guarantee a clean connection on almost all surfaces, including with ambient conditions in which oscillations and vibrations could affect the contacting. Irrespective of the specified installation height of the interface pin blocks, the test probes compensate for unevenness and differing heights on the contact surfaces. These features ensure a perfect and safe electrical contact. When positioned in the right place and used correctly, the interface pins can achieve up to 1 million contact cycles.

One typical application for interface pins is their use in interface pin blocks. They can be used for the secure connection of two PCBs which, by means of flexible contacting technology, can be connected and disconnected as often as required. This especially flexible connection of the interface pin blocks requires only a contact surface which is larger than the diameter of the probe head, so it offers considerable advantages when compared with connectors, which always require a precise connection. Additional arguments in favour of the use of interface pin blocks include the absence of insertion and withdrawal forces, and minimal wear and tear.

## Design

In its basic construction, a test probe consists of three parts (see fig. 1). The electrical contact to the test piece is created by the plunger, which, together with a spring, is inside the barrel. The individual parts are connected moveably with each other by means of mechanical re-shaping of the barrel..

## Barrel

The barrel protects the moving parts. At the same time, small tolerances ensure precise plunger guidance. The barrels are manufactured using deep drawing or machining processes. In some cases, ventilation drill holes are needed to ensure optimal coating.

## Plunger

The plunger must conform to very high standards. It is a moving part which must be low-wear but at the same time highly conductive. Close tolerances must be included in the above criteria when plungers are used for small centers. The plungers are manufactured with maximum precision on long-turning lathes and then refined. In most cases, the plunger is coated with gold.

Plungers are manufactured of hardened fine-grained steel for use in heavy-duty operating time situations. The emphasis is on tips with extra penetration, for example pointed tips. Aged copper-beryllium (CuBe is used for plungers, especially when high demands are made of electrical conductivity for longterm constancy. With regard to environmental aspects, these are taken care of by the 100% wet-processing of the beryllium and by the coating on the plungers.

Test probes with CuBe plungers are suitable for measurement tasks in the case of potential difference and for high-voltage applications. The brass plunger design with equally good conductivity is suitable for low-wear applications, e.g. charging contacts with very short travel and non-aggressive tip styles.

Alternatively, the plungers are fitted with different improvement coatings which, in addition to the electrical conducting and contact characteristics, are intended to satisfy specific requirements in respect of abrasion resistance and corrosion protection.

## Spring

For the most part, springs are manufactured of spring steel wire of the maximum strength category with a special surface finish. The working temperature range for these springs between -30°C and +120°C also determines the operating temperature range for the complete spring contact probes. High-strength stainless steel wire is used with higher temperatures up to +250°C and increased demands on corrosion protection.

However, with this wire, it is not possible to achieve such high strength or spring force values as with spring steel wire.

L'IMPULSION Retrouvez nous sur www.limpulsion.fr

Normally, gold is used as a surface plating because it reduces wear and improves the contact characteristics. The coating is applied in such a way that the structural characteristics of the high-strength spring material are affected as little as possible. In special cases, the springs are silver-coated (improved conductivity). In most cases, stainless steel springs are not given an additional coating, and they are used when temperatures are very high or for maximum heating.

The rated spring force of the spring contact probes refers to the working travel, which, as a rule, is 4/5ths of the maximum permitted plunger stroke travel.

Fig. 1:
Test Probe Design

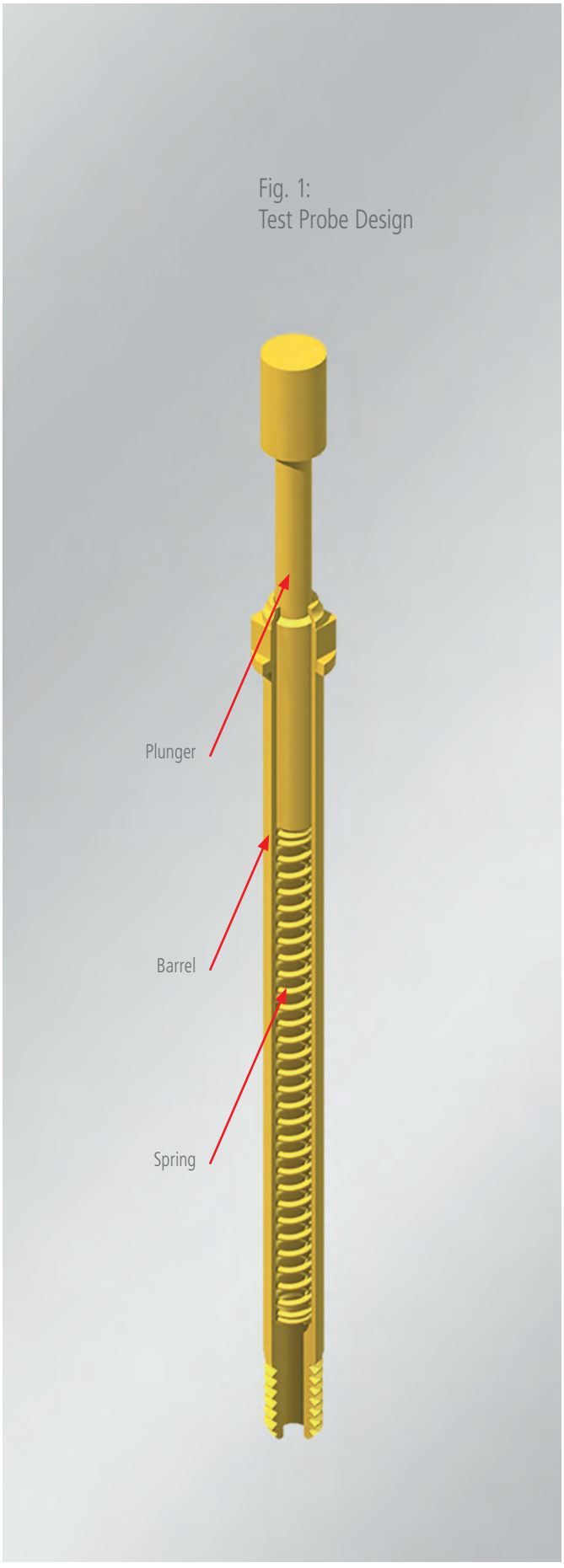


L'IMPULSION
Retrouvez nous sur
www.limpulsion.fr

# Materials and Coatings



## MATERIALS

### Steel

PTR uses steel as the standard material for the plungers. The stability of this material is good in comparison with others, and is extremely suitable for aggressive probe tips such as the "pointed tip" or the "chisel". The electrical properties are improved by the preferred gold coating.

### Copper Beryllium

Copper beryllium is superior to steel in respect of the long-term stability of the electrical properties. Adding beryllium allows the materials to be easily processed, without completely losing the excellent properties of the copper.

### Brass

Brass is a relatively soft material which is good for manufacturing purposes. Because of the high copper content, the electrical properties are also good, and for this reason, the material is mainly used for receptacles and barrels. However, brass is also a very popular plunger material for battery charging contacts, which normally do not have to withstand a very high number of load cycles.

L'IMPULSION Retrouvez nous sur www.limpulsion.fr

### Bronze
Bronze is used as a base material for receptacles and barrels; it offers good electrical properties and can be both turned and deep drawn.

### Nickel Silver
Nickel silver is a very interesting material for receptacles because it is especially corrosion-proof and can be manufactured using the deep drawing process. Its copper content also makes it an acceptable conductor.

### Spring Steel
High-strength spring steel is what is normally used to manufacture springs. It provides excellent properties which permit the manufacture of test probes with long operating times and balanced forces. The temperature range is from -30°C to 120°C. The springs are coated with gold or silver.

### Stainless Steel
Stainless steel is used for springs in situations which require greater temperature stability than those which require standard springs. Temperatures from -40°C to 250°C (max. period of one hour) are possible. Good corrosion resistance is an additional advantage of stainless steel.

### Plastic
High-quality plastics which can resist high temperatures are used to isolate the probe tip of switching test probes or as an isolator in the test probe itself. This material is also used as a carrier material for interface pin blocks. This is where PTR can benefit from its extensive experience of the terminal block sector.

## COATINGS
**In all cases an intermediate nickel coating is used for protection in order to prevent diffusion of the material.**

### Hard Gold
Hard gold has a passive surface, so it is an ideal electrical contact partner with very good chemical resistance. The special gold alloy, with a micro hardness of up to 400 HV, is much harder than pure gold, but there are limits with regard to wear behaviour. The abrasion behaviour can be influenced positively if the conditions of use are optimised, for example by the avoidance of radial movements.

### Rhodium
Rhodium is one of the platinum metals. A very high level of wear resistance is achieved because of the very high degree of hardness of up to 1000 HV. However, because of the stored oxygen, a higher level of layer brittleness must be expected. This problem can be reduced by means of a special layer build-up and reduced layer thicknesses. However, rhodium plating is unsuitable when heavy impact loads are involved. If the brittle and very thin rhodium layer is damaged, this may have a negative effect on the initially good electrical contact characteristics.

### Nickel (chemical)
Nickel is distinguished by even layer deposition with excellent contour accuracy, which is especially advantageous for the function of pointed tips and sharp-edged tip styles. This nickel-plating has a micro hardness of approx. 600 HV, which can, as an option, be increased to 1000 HV and more by means of subsequent heat treatment. This is accompanied by very good wear resistance. Maximum corrosion resistance is achieved by the intercalation of phosphorus. However, the resulting inactive surface does not result in such good contacts as those of gold or rhodium.

### Silver
Silver provides the best electrical conductivity among metals, which is why it is used, for example, for high-current applications. In this case, the spring of the test probe used is silver-coated in order to increase conductivity. In addition, some of the probe tips in the high-current range are fitted with caps made of a silver alloy, because this prevents restrictions to the conductivity caused by contact pitting.

L'IMPULSION | Retrouvez nous sur www.limpulsion.fr

# Receptacles and Assembly

## RECEPTACLES

Receptacles are fitted firmly in the relevant probe location oards in order to permit the replacement of the spring contacts without wiring work when the limit to the operating life (see page 20) is reached.

### Base materials for the receptacles are

» Bronze
» Nickel Silver or
» Brass

Gold plating ensures good electrical properties, with nickel underneath for corrosion protection.

### Types of Receptacles

PTR HARTMANN offers receptacles with a range of connection types. In addition to standard products such as crimp, solder and wire wrap connections (see fig. 1), solutions for special fields of application
are available.

**Threaded Receptacles for screwable Test Probes (see fig. 2)**

This type of receptacle is used in so-called test benches which test the functionality of cable harnesses. The screwing of the test probes into the receptacle prevents unintended twisting of the test probes out of the receptacle caused by the abrupt stroke movements of the test modules.

**Threaded Receptacles with a drill hole in the solder cup (see fig. 2)**

This receptacle is sealed vacuum-tight when the wire is soldered on.

**Easy Replacement Receptacles for Switching Test Probes (see fig. 2)**

In this case, wiring takes place twice on the receptacle and no longer on the switching test probe itself. During maintenance work, the switching test probe can be replaced without the need for any other wiring work.

**Receptacles with a non-rotating feature (see fig. 2)**

This type of receptacle makes it possible to position the test probes precisely in respect of the test piece. This solution is used especially with the so-called spade-shaped head style.

**Insulation Receptacles (see fig. 2)**

This type of receptacle is deployed when test probes are used in a conductive carrier material. In this case, the insulation receptacle holds the actual receptacle of the test probe.

**Pre-wired Receptacles n (see fig. 1)**

These receptacles are already fitted with a component lead which the customer can adapt to the required individual length.

**Receptacles for different extension heights (see fig. 3)**

As standard, the receptacle is pressed into the carrier material as far as the stop. The receptacle type fitted with a press ring permits different extension heights – it is inserted to a specified distance by means of a special insertion tool. So-called distance rings are an alternative to this and are placed over the receptacle before it is pressed into the carrier material. Distance rings are available for different series and extension heights.

## ASSEMBLY HOLES

In order to achieve an optimal fit of the receptacles in the probe location board, the assembly holes must be drilled very carefully. The drill diameters listed in the data sheets for the individual series are the values based on our experience.

### These guideline values are dependent on the following conditions:

» Use of hard metal drills
» RPM of the drill tool 26.000 … 35.000 rpm
» Advance 0.6 … 0.8 m/min
» Material as described in the data sheet
» Probe location board thickness 10.0 mm
» Drilling under vacuum swarf removal device

Deviations from these influencing variables may result in other drill diameters.

Trial drillings are recommended in every case.

L'IMPULSION Retrouvez nous sur www.limpulsion.fr

Fig 1: Standard Types of Receptacles

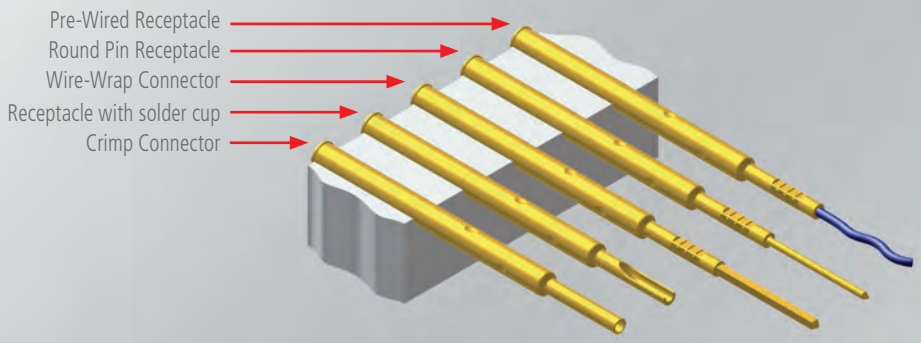


Fig. 2: Individual Types of Receptacles

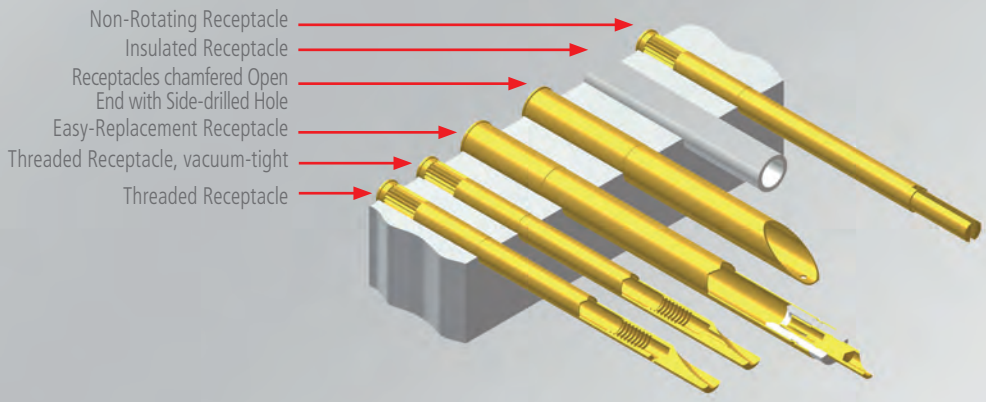


Fig. 3: Types of Receptacles for Different Extension Heights

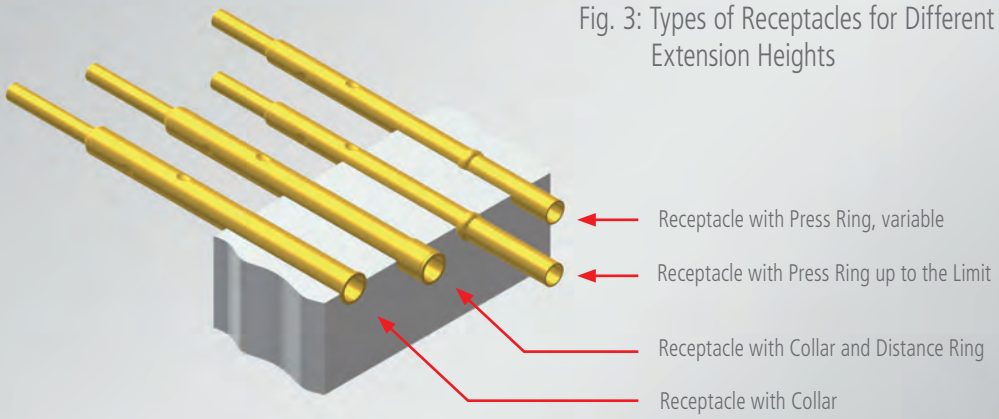


L'IMPULSION Retrouvez nous sur www.limpulsion.fr

# Lateral Play | Quality and Operating Lifer

## LATERAL PLAY

### Test Point Accuracy

The test point accuracy which can be achieved is determined by the tolerances in the adapter (play, displacement of the receptacle drill holes), the deviations of the test points and the lateral
play of a fitted spring contact probe (see fig. 1). This occurs as a result of the play between the plunger and receptacle required for the plunger movement and also of manufacturing tolerances (see fig. 2). The amount of lateral play at the plunger tip is also dependent on the length of the plunger in relation to the effective plunger guide length.

Shear forces which deflect the spring contact probe during use also affect the amount of lateral play.

Optimal pinpointing is achieved by a combination of spring contact probes with the shortest possible travel, double plunger guides and minimal adapter tolerance, or even the use of plate guides. Depending on the test probe series which is being used, the test point accuracy – which is dependent on the amount of lateral play – can be reduced to less than 0.8 mm and down to 0.1 mm.

## QUALITY AND OPERATING LIFE

When in use, Test Probes are subjected to high demands in respect of function and operating life. From development to dispatch, the manufacture of PTR test probes takes place in accordance with optimised procedures. A quality assurance system according to EN 29001/ISO 9001 guarantees process security.

Tests are carried out by means of load change tests in order to optimise materials and the constructional design of test probes. Functional capability and operating life are subjected to continuous monitoring in our reliability testing facilities (see fig. 3).

### As a rule, the maximum operating life of a test probe depends on the following factors:

- As low a spring force as possible in relation to the spring diameter and stroke travel
- Correct axial load, avoidance of shear forces
- Maintenance of the recommended working travel
- Precise and gentle insertion of the test probe into the receptacle
- Avoidance of harmful external influences e.g. soiling, high moisture content of aggressive media, high temperature load
- Contacting only in current-free or zero-potential state
- As low a current load as possible

Of course, the level of actual durability also depends on the requirements of each user, e.g. limit values for continuity resistances, degree of soiling, or operating characteristics.

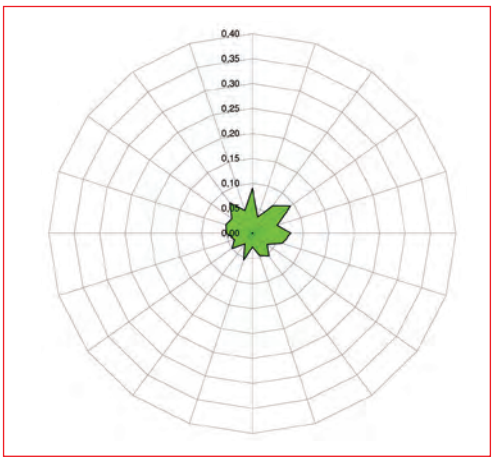


Fig. 1:
Test Point Accuracy (mm)




Fig. 2:
Lateral Play

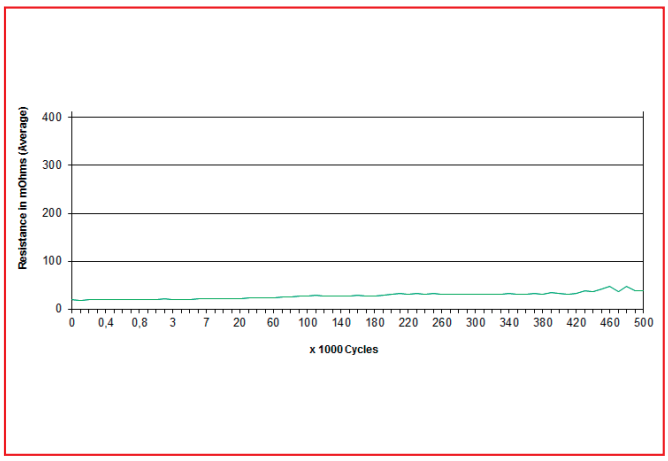


Fig. 3:
Life Circle for Series 1025/E (Example)

L'IMPULSION Retrouvez nous sur www.limpulsion.fr

# Highlights

## TEST PROBES AS PCB COMPONENTS

We are expanding our product range of interface connectors and adding to our tried-and-test FKB5322 series with a horizontal variant which permits an orthogonal arrangement of the PCBs. Versions with soldering pins for THT applications, and test probes with a solder connection for individual applications, complete the programme.
The requirement for increasingly smaller centres is met by our new contact block with 1.27 mm / 50 mil spacing in an SMD version.

» Interface Pin Blocks see page 194

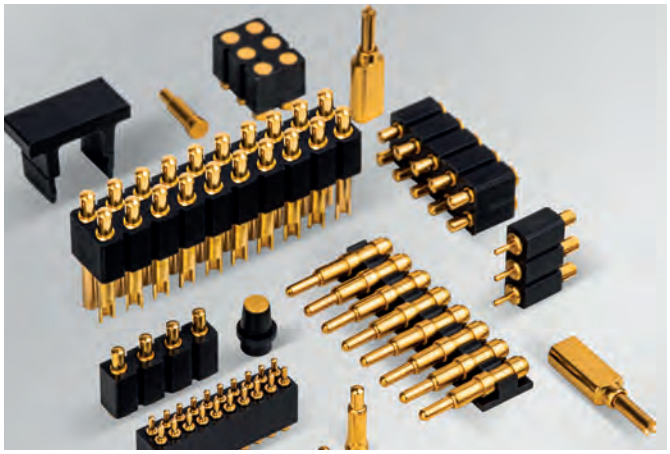

## HIGH-FREQUENCY TEST PROBES

A new addition to the tried-and-tested 7860 series with exchangeable inner conductor is our 7890 series for the contacting of Fakra-Mini automotive multi-connector systems. Variants for the Fakra plug and jack are available.

» Product data Mini FAKRA Plug see page 208
» Product data Mini FAKRA Socket see page 209

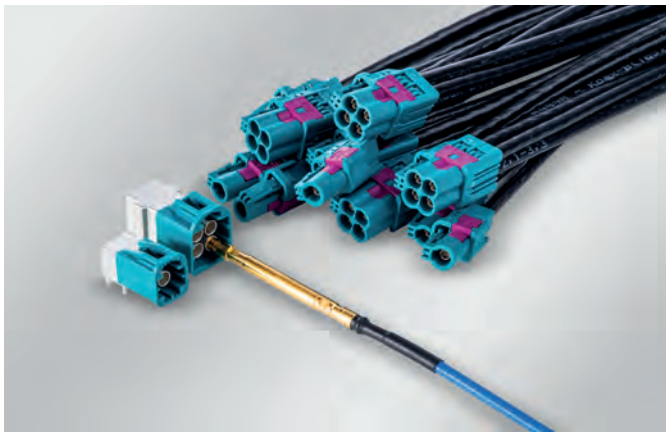

## TESTING HIGH CURRENTS

You can always rely on our comprehensive range of high-current test probes. Our offer covers almost every application requirement from very compact designs for centres of 2.54 mm / 100 mil up to sturdy versions with a rated current of 100 A. Almost all high-current test probes are available in a threaded version which ensures an optimal contact between the test probe and the receptacle. A wide range of different tip styles completes the product range.

» High-Current Test Probes see page 162



L'IMPULSION Retrouvez nous sur www.limpulsion.fr

# Tip Styles

## FORM A



**90° Concave**
For connector pins, wire-wrap pins and straight / curved terminals. To be used under clean conditions because contamination can cause failures.

## FORM A6



**90° Concave, self-cleaning**
For connector pins, wire-wrap pins and straight / curved terminals. The head has special grooves that protect the contact area from contamination.

## FORM B



**30° pointed tip**
For strip conductors, throughplating, soldering points and test pads.

## FORM BST



**Steel Needle**
A sharp steel needle with a long implement life for reliable penetration of flux and dirt on uncleaned printed boards or component groups and for SMD contacts.

## FORM BST3



**Tri-Needle**
Three-needle form of very aggressive character for reliable penetration of flux and dirt on uncleaned printed circuit boards.

## FORM C



**Serrated**
A universal head for straight or curved component leads, wire-wrap posts and connector pins.

## FORM CS



**Serrated with overlapping plastic insulation**
Presence test of component legs. The overlapping plastic insulation avoids electrical contact when connector pins are missing.

## FORM D



**Round Head**
Used to test circuits or gold pads. Do not leave marks on the test area. Also used for testing sockets in connectors.

## FORM E



**90° Convex**
Plated-through holes, pads and lands or sockets in connectors.

## FORM EB



**Press Fitted Steel Needle**
Very aggressive and robust steel needle. Especially designed for testing contaminated areas.

## FORM F



**Flat head**
Especially for gold pads and convex areas, cleaned contact points. Avoids marks on the contact area.

L'IMPULSION
Retrouvez nous sur
www.limpulsion.fr

# Tip Styles

## FORM G



**Four-point crown**
For component leads, soldering points and test pads, when there is no strong contamination.

## FORM H



**Pyramid**
Plated-through holes and pads. The sharp edges cut through oxides and contaminants.

## FORM K



**Star**
See tip style "H", but with higher contact penetration. Used also for rotating test probes. It cuts through oxides and contaminants.

## FORM M



**Tulip with overlapping middle edge**
The combination of crown and central tip ensures contact reliability at almost all test points. Overlapping middle edge is fixing the head.

## FORM M1



**Tulip**
The combination of crown and central tip ensures contact reliability at almost all test points.

## FORM N



**Three-point crown - self-cleaning**
Designed to test contaminated printed circuit boards. The special cut of the tip allows contaminates to fall out easily.

## FORM Q



**Four-point crown - self-cleaning**
Designed to test contaminated printed circuit boards. The special cut of the tip allows contaminates to fall out easily.

## FORM Q8



**Eight-point crown - self-cleaning**
Designed to test strong contaminated component legs. High centering efficiency.

## FORM V



**Chisel**
Tip with extra penetration of open and closed throughplating, and for level contact surfaces. Penetrates flux and dirt.

## FORM D1xxx



**Round head**
Designed for position test of sockets in connectors.

## FORM Y



**Spade**
application with test probes in connector systems.

L'IMPULSION
Retrouvez nous sur
www.limpulsion.fr

# Article Designations

## ARTICLE DESIGNATION – TEST PROBES

| 3010 | /2GW5 | – | F1 | – | 1.3NE | – | Au | – | 2.3 | C | /SH4.0 |
|---|---|---|---|---|---|---|---|---|---|---|---|
| 1 | 2 | | 3 | | 4 | 5 | 6 | | 7 | 8 | 9 |

### 1 Test Probe – Series Designation

### 2 Special Design of the Barrel

| | |
|---|---|
| /D | Rotating Test Probe |
| /F | Type Opener |
| /G | Thread Design |
| /R | Knurl |
| /S | Plug-in Connector |
| /V | Non-Rotating Design |
| /W | Interchangeable without Soldering |
| /Number | Collar Height (mm) |
| /Number | (second Part) Adjustment Area of the Extension Height |

### 3 Tip Style

Different Letters (see page 22)

### 4 Spring Force (N)

| | |
|---|---|
| Value | In General $^4/_5$ of max. Travel |

### 5 Spring Material

| | |
|---|---|
| E | Stainless Steel |

### 6 Tip Plating

| | |
|---|---|
| Ag | Silver |
| Au | Gold |
| CB | Copper-Beryllium |
| HTK | Plastic |
| Ni | Nickel |
| Rh | Rhodium |

### 7 Tip Diameter (mm)

Selected Tip Style

### 8 Tip Material

| | |
|---|---|
| C | Copper-Beryllium (CuBe) |
| M | Brass (CuZn) |

### 9 Additional Information

| | |
|---|---|
| L | For Connector von L 4000 |
| /MHx.x | Full Travel (mm) |
| /SHx.x | Switch (mm) |
| /X x Y | Connector Pin Diameter x Connector Pin Length (mm) |

L'IMPULSION Retrouvez nous sur www.limpulsion.fr

# Article Designations

## ARTICLE DESIGNATION – RECEPTACLES

H 1025 /12 C
1 2 3

### 1 Receptacles – Series Designation

### 2 Special Design of Receptacle

| | |
|---|---|
| /G | Thread |
| /R | Knurl |
| /S | Chamfered Design |
| /SEV | Switching Element |
| /.V | Non-Rotating Design |
| /...V | Vacuum-Tight Design |
| /W | Interchangeable without Soldering |
| /Number | Collar Height (mm) |

### 3 Connection Type

| | |
|---|---|
| C | Crimp Connection |
| L | Soldering Connection |
| SEV | Vacuum-Tight Switching Element |
| ST | Additionally Roller-Burnishing |
| V xx | Pre-Wired Receptacles with Length |
| W | Wire Wrap Connection |
| WR | Round Posts |
| - Number | Receptacles Length (mm) |

## ARTICLE DESIGNATION – DISTANCE RINGS

ZRG 1021 /2
1 2

### 1 Distance Rings – Series Designation

### 2 Length

| | |
|---|---|
| /Number | Distance Rings Length (mm) |

L'IMPULSION Retrouvez nous sur www.limpulsion.fr

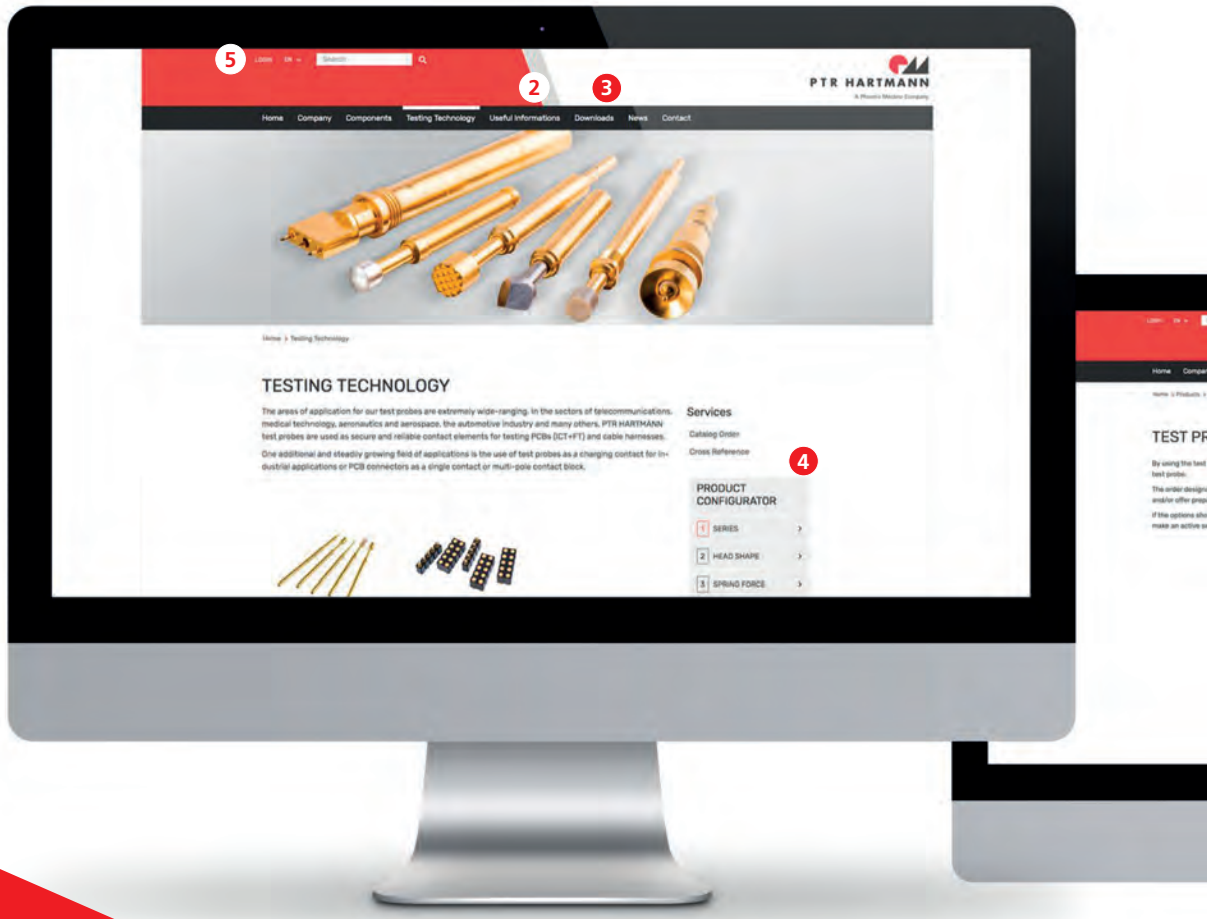


# www.ptr-hartmann.com

**1 Products**
- Product range - Testing Technology
- Product range - Connection Technology
- Product search with individual search criteria
- Product data sheets with technical drawings
- PDF generation
- Test Probes - product configurator
- Sample order
- Quotation order

**2 Know How**
- Background knowledge and more detailed information on our products

**3 Downloads**
- Catalogues
- Certificates
- Statements of conformity
- Brochures

**4 Cross-Reference**
- Recoding of competitor article designations to PTR designations

**5 Login Area**
- Premium service for registered customers
- Download 3D-files

**6 Contact**
- Your contacts worldwide

L'IMPULSION
Retrouvez nous sur
www.limpulsion.fr

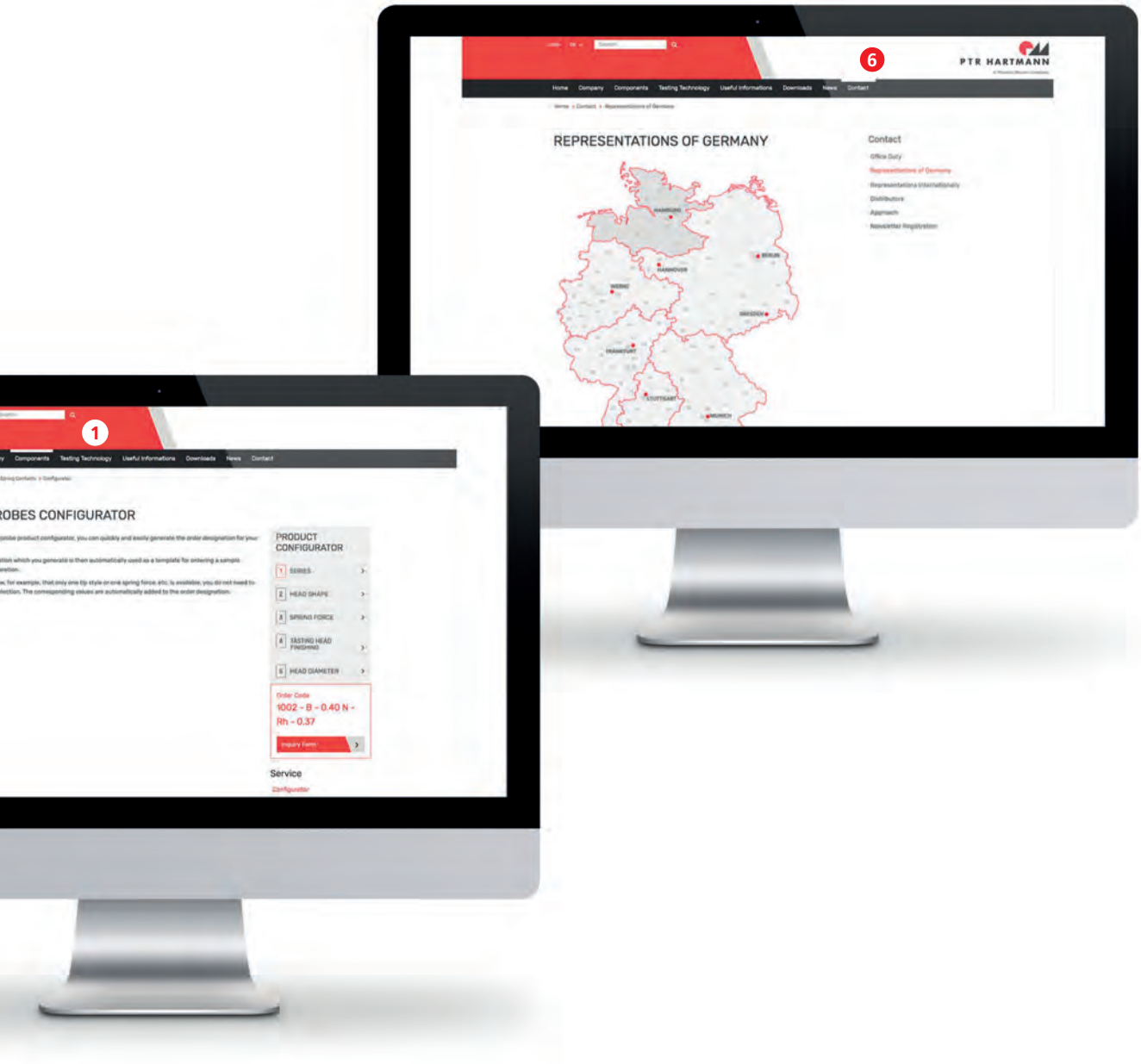


L'IMPULSION
Retrouvez nous sur
www.limpulsion.fr

# TEST PROBES FOR SMALL CENTERS

**Test Probes with Centers of 30 mil (0.76 mm) and greater have been designed for applications with very small centers.**

In some cases, the diameters are extremely small, and the receptacles for these Test Probes are supplied with pre-assembled wires (AWG 30/AWG 32). The length and colour of the connection wires can be selected as required.

When these Test Probes are used in the test adapters, a guide plate is normally inserted in order to prevent misalignment and damage to the test probe plunger and to optimise the point of contact accuracy.

L'IMPULSION
Retrouvez nous sur
www.limpulsion.fr

| SERIES | CENTER | PAGE |
|---|---|---|
| 1001 | 30 mil / 0.76 mm | 30 |
| 1002 | 40 mil / 1.02 mm | 31 |
| 1003 | 40 mil / 1.02 mm | 32 |
| 1005 | 40 mil / 1.02 mm | 33 |
| 1006 | 40 mil / 1.02 mm | 34 |






L'IMPULSION Retrouvez nous sur www.limpulsion.fr

# Series 1001

Test Probe for small Centers 30 mil / 0.76 mm

| BENEFIT | |
|---|---|
| Test probe for 30 mil centers | |
| Short travel | |
| Low contact force | |
| Receptacle pre-wired | |
| **MECHANICAL DATA** | |
| Center | 0.76 mm / 30 mil |
| Temperature Range | -40 °C - +250 °C |
| Full Travel | 2.00 mm |
| Working Travel | 1.35 mm |
| Pre-Loaded Spring Force | 0.13 N |
| Spring Force at Working Travel | 0.30 N |
| **ELECTRICAL DATA** | |
| Max. Current Rating | 0.5 A |
| Typical Continuity Resistance | ≤ 150 mOhm |
| **MATERIALS** | |
| Barrel | Bronze, gold-plated |
| Spring | Stainless Steel, gold-plated |
| Plunger | Steel, gold-plated |
| Receptacle | Bronze, gold-plated |
| Wire AWG 32 (Blue) | Copper, silver-plated, insulated |
| **RECOMMENDED DIAMETER OF DRILL** | |
| HP 2361.1 (Trolitax) | 0.53 mm |

**TIP STYLE · DIAMETER · PLATING**



| G3 |
|---|
| 0.28 Au |

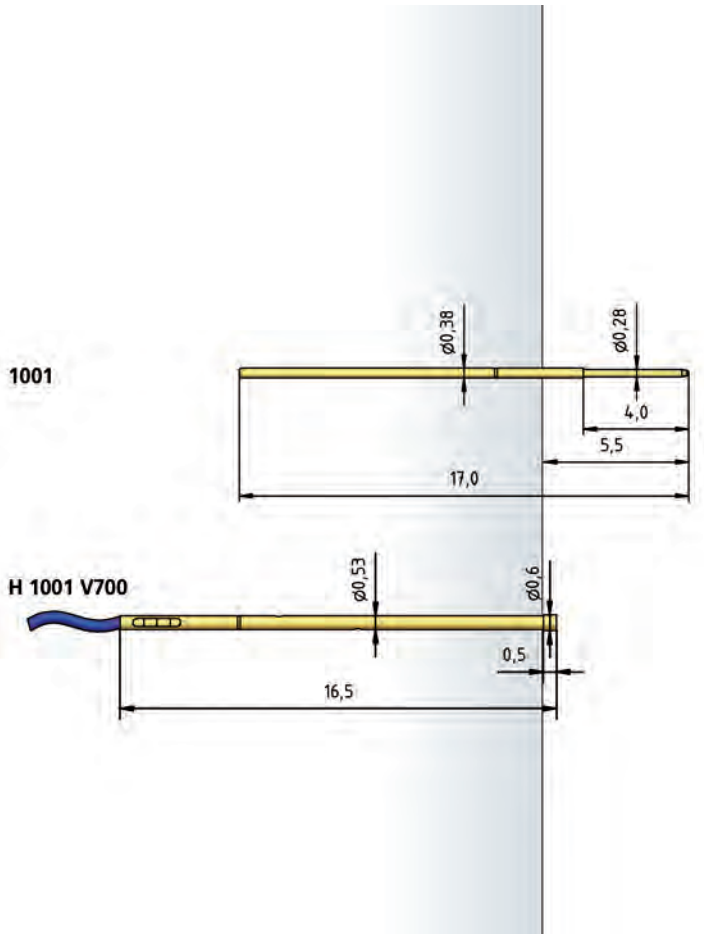


## HOW TO ORDER

| 1001 | - | G3 | - | 0.3 N | - | Au | - | 0.28 |
|---|---|---|---|---|---|---|---|---|
| 1 | | 2 | | 3 | | 4 | | 5 |

1 Series 2 Tip Style 3 Spring Force 4 Tip Plating 5 Tip Diameter

L'IMPULSION
Retrouvez nous sur
www.limpulsion.fr

# Test Probe for small Centers 40 mil / 1.02 mm

# Series 1002



## TIP STYLE · DIAMETER · PLATING



| B |
|---|
| 0.37 Rh |

## BENEFIT

| |
|---|
| Test probe for 40 mil centers |
| Short travel |
| Low contact force |
| Receptacle pre-wired |

## MECHANICAL DATA

| | |
|---|---|
| Center | 1.02 mm / 40 mil |
| Temperature Range | -30 °C - +120 °C |
| Full Travel | 2.00 mm |
| Working Travel | 1.35 mm |
| Pre-Loaded Spring Force | 0.25 N |
| Spring Force at Working Travel | 0.40 N |

## ELECTRICAL DATA

| | |
|---|---|
| Max. Current Rating | 1.0 A |
| Typical Continuity Resistance | ≤ 100 mOhm |

## MATERIALS

| | |
|---|---|
| Barrel | Bronze, gold-plated |
| Spring | Spring Steel, gold-plated |
| Plunger | Steel, rhodium plated |
| Receptacle | Bronze, gold-plated |
| Wire AWG 30 (Blue) | Copper, silver-plated, insulated |

## RECOMMENDED DIAMETER OF DRILL

| | |
|---|---|
| HP 2361.1 (Trolitax) | 0.63 mm |

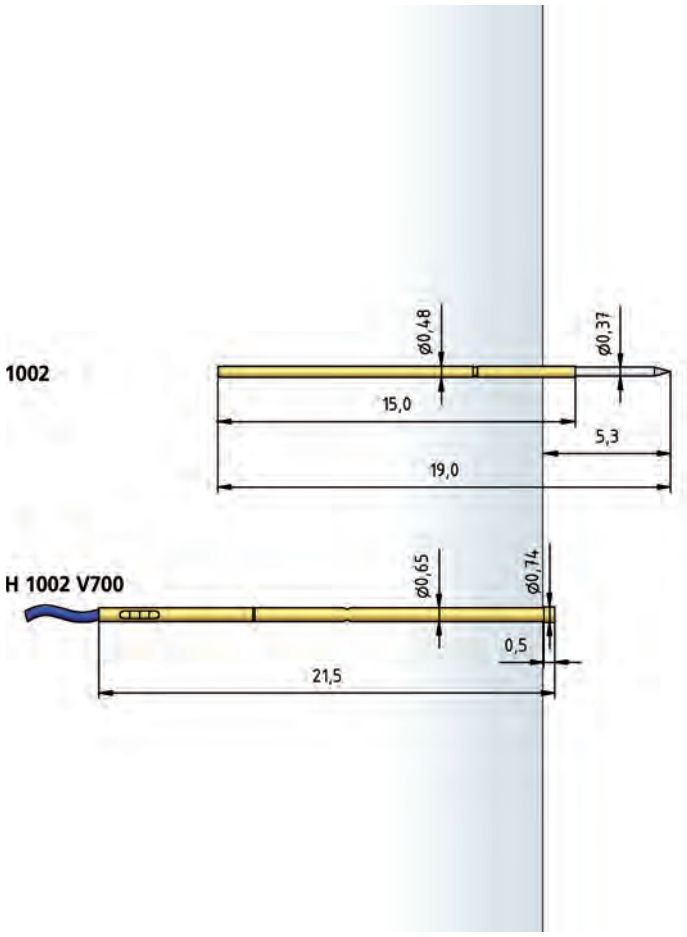


## HOW TO ORDER

| 1002 | - | B | - | 0.4 N | - | Rh | - | 0.37 |
|---|---|---|---|---|---|---|---|---|
| 1 | | 2 | | 3 | | 4 | | 5 |

1 Series 2 Tip Style 3 Spring Force 4 Tip Plating 5 Tip Diameter

L'IMPULSION Retrouvez nous sur www.limpulsion.fr

# Series 1003

Test Probe for small Centers 40 mil / 1.02 mm

| BENEFIT | |
|---|---|
| Test probe for 40 mil centers | |
| Short travel | |
| Low contact force | |
| Receptacle pre-wired | |
| **MECHANICAL DATA** | |
| Center | 1.02 mm / 40 mil |
| Temperature Range | -30 °C - +120 °C |
| Full Travel | 1.30 mm |
| Working Travel | 1.00 mm |
| Pre-Loaded Spring Force | 0.40 N |
| Spring Force at Working Travel | 0.75 N |
| **ELECTRICAL DATA** | |
| Max. Current Rating | 1.0 A |
| Typical Continuity Resistance | ≤ 100 mOhm |
| **MATERIALS** | |
| Barrel | Bronze, gold-plated |
| Spring | Spring Steel, gold-plated |
| Plunger | Steel, gold-plated |
| Receptacle | Bronze, gold-plated |
| Wire AWG 30 (Blue) | Copper, silver-plated, insulated |
| **RECOMMENDED DIAMETER OF DRILL** | |
| HP 2361.1 (Trolitax) | 0.63 mm |

**TIP STYLE · DIAMETER · PLATING**



| B |
|---|
| 0.50 Au |

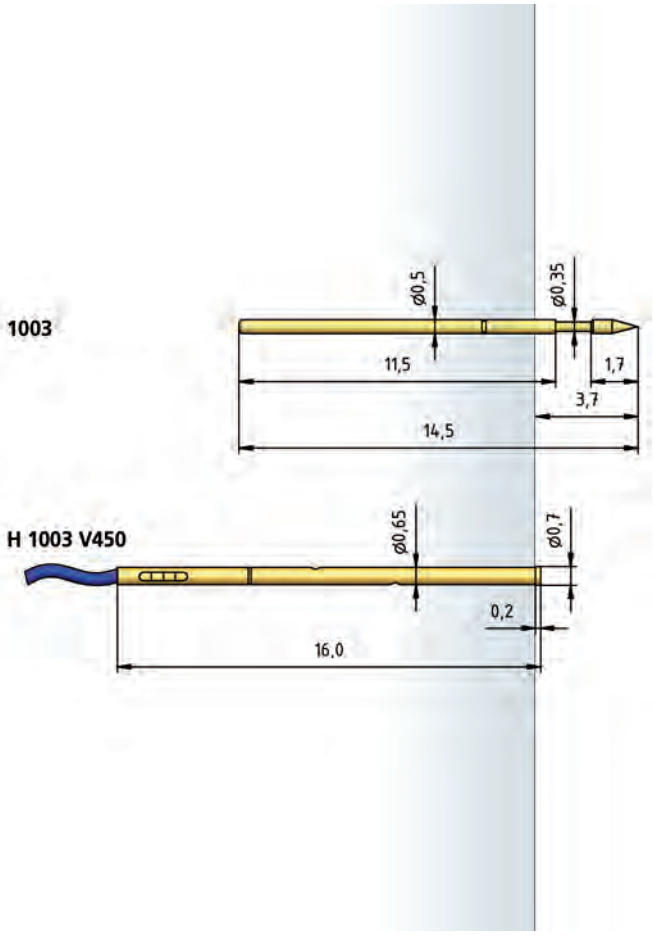


## HOW TO ORDER

| 1003 | - | B | - | 0.75 N | - | Au | - | 0.5 |
|---|---|---|---|---|---|---|---|---|
| 1 | | 2 | | 3 | | 4 | | 5 |

1 Series 2 Tip Style 3 Spring Force 4 Tip Plating 5 Tip Diameter

L'IMPULSION Retrouvez nous sur www.limpulsion.fr

# Test Probe for small Centers 40 mil / 1.02 mm

# Series 1005



## TIP STYLE · DIAMETER · PLATING



| B |
|---|
| 0.35C Au |

## BENEFIT

| |
|---|
| Test probe for 40 mil centers |
| Short travel |
| Low contact force |
| Receptacle pre-wired |

## MECHANICAL DATA

| | |
|---|---|
| Center | 1.02 mm / 40 mil |
| Temperature Range | -30 °C - +120 °C |
| Full Travel | 3.80 mm |
| Working Travel | 3.00 mm |
| Pre-Loaded Spring Force | 0.20 N |
| Spring Force at Working Travel | 0.80 N |

## ELECTRICAL DATA

| | |
|---|---|
| Max. Current Rating | 3.0 A |
| Typical Continuity Resistance | ≤ 20 mOhm |

## MATERIALS

| | |
|---|---|
| Barrel | Bronze, gold-plated |
| Spring | Spring Steel, gold-plated |
| Plunger | CuBe, gold-plated |

## RECOMMENDED DIAMETER OF DRILL

| | |
|---|---|
| HP 2361.1 (Trolitax) | 0.70 mm |

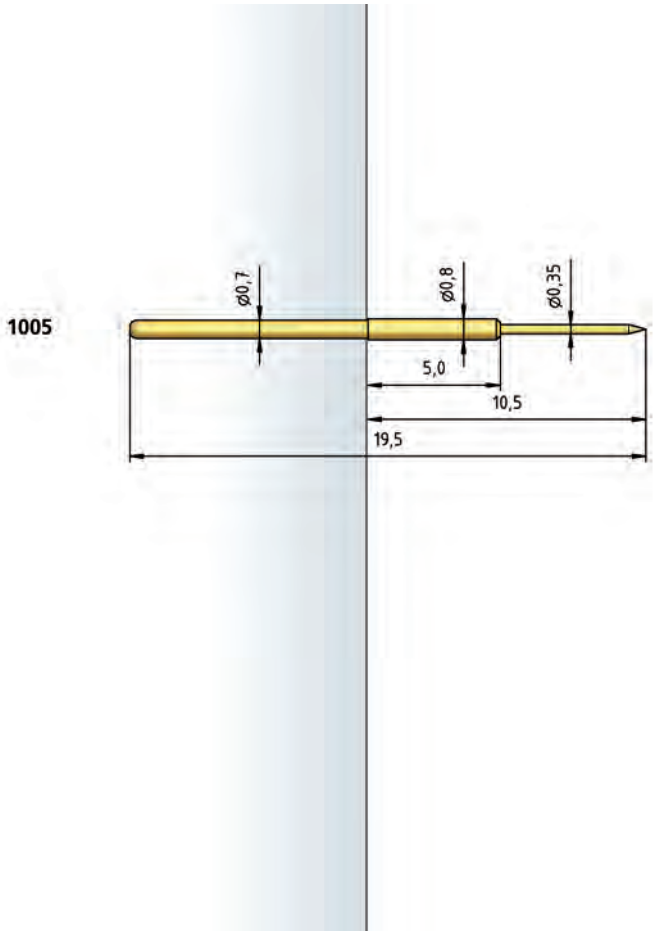


## HOW TO ORDER

| 1005 | - | B | - | 0.8 N | - | Au | - | 0.35 | C |
|---|---|---|---|---|---|---|---|---|---|
| 1 | | 2 | | 3 | | 4 | | 5 | 6 |

1 Series 2 Tip Style 3 Spring Force 4 Tip Plating 5 Tip Diameter
6 Tip Material (only for CuBe)

L'IMPULSION
Retrouvez nous sur
www.limpulsion.fr

# Series 1006

Test Probe for small Centers 40 mil / 1.02 mm

| BENEFIT | |
|---|---|
| Test probe for 40 mil centers | |
| Short travel | |
| Low contact force | |
| **MECHANICAL DATA** | |
| Center | 1.02 mm / 40 mil |
| Temperature Range | -30 °C - +120 °C |
| Full Travel | 2.29 mm |
| Working Travel | 1.27 mm |
| Pre-Loaded Spring Force | 0.17/ 0.15 N |
| Spring Force at Working Travel | 0.37/ 0.45 N |
| **ELECTRICAL DATA** | |
| Max. Current Rating | 3.0 A |
| Typical Continuity Resistance | ≤ 55 mOhm |
| **MATERIALS** | |
| Barrel | Bronze, gold-plated |
| Spring | Bronze, Stainless Steel, gold-plated |
| Plunger | CuBe, gold-plated |
| Receptacle | Bronze, gold-plated |
| **RECOMMENDED DIAMETER OF DRILL** | |
| HP 2361.1 (Trolitax) | 0.71 mm |
| HGW 2372 (Glass filled Material) | 0.75 mm |
| **HIGH-TEMPERATURE APPLICATIONS** | |
| Temperature Range | -40 °C - +250 °C |
| Pre-Loaded Spring Force | 0.15 N |
| Spring Force at Working Travel (Order Index E) | 1.45 N |

**TIP STYLE · DIAMETER · PLATING**



| B | D | G |
|---|---|---|
| 0.53C Au | 0.53C Au | 0.53C Au |

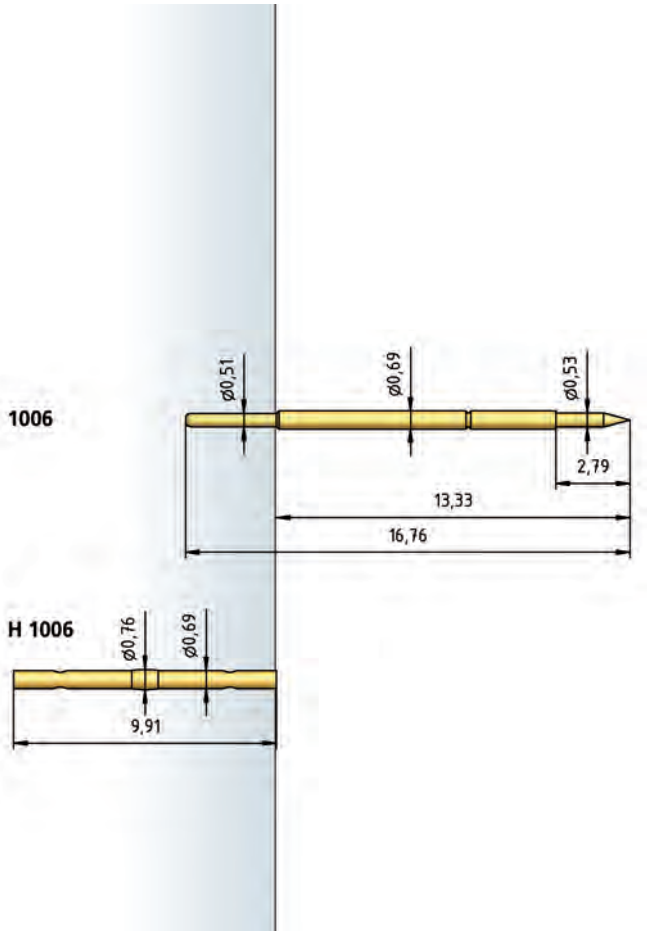


## HOW TO ORDER

| 1006 | - | B | - | 0.45 N | E | - | Au | - | 0.53 | C |
|---|---|---|---|---|---|---|---|---|---|---|
| 1 | | 2 | | 3 | 4 | | 5 | | 6 | 7 |

1 Series 2 Tip Style 3 Spring Force 4 High-Temperature 5 Tip Plating
6 Tip Diameter 7 Tip Material (only for CuBe)

L'IMPULSION Retrouvez nous sur www.limpulsion.fr

# STANDARD TEST PROBES

## CENTER ≤ 100 mil / 2.54 mm

**The Test Probe series up to 100 mil consist of models with different sizes, travel and extension heights.**

This wide range of products allows multi-purpose use such as the testing of assembled components (in-circuit test or function test) or in other applications – wherever a flexible electrical connection is required.

L'IMPULSION
Retrouvez nous sur
www.limpulsion.fr

| SERIES | CENTER | PAGE |
|---|---|---|
| 1007 | 50 mil / 1.27 mm | 38 |
| 1007.50 | 50 mil / 1.27 mm | 39 |
| 1007.60 | 50 mil / 1.27 mm | 40 |
| 1007.70 | 50 mil / 1.27 mm | 41 |
| 1010 | 75 mil / 1.91 mm | 42 |
| 1010.50 | 75 mil / 1.91 mm | 43 |
| 1011 | 75 mil / 1.91 mm | 44 |
| 1015 | 100 mil / 2.54 mm | 45 |
| 1015.50 | 100 mil / 2.54 mm | 46 |
| 1016 | 100 mil / 2.54 mm | 47 |
| 1018 | 100 mil / 2.54 mm | 48 |
| 1018.06 | 100 mil / 2.54 mm | 49 |






L'IMPULSION Retrouvez nous sur www.limpulsion.fr

# Series 1007

Standard-Test Probe 50 mil / 1.27 mm

| BENEFIT | |
|---|---|
| Universal field of application | |
| Compact design | |
| Short travel | |
| Contacting of assembled PCBs | |
| **MECHANICAL DATA** | |
| Center | 1.27 mm / 50 mil |
| Temperature Range | -30 °C - +120 °C |
| Full Travel | 2.80 mm |
| Working Travel | 2.40 mm |
| Pre-Loaded Spring Force | 0.25/ 0.25/ 0.40 N |
| Spring Force at Working Travel | 0.70/ 1.00/ 1.70 N |
| **ELECTRICAL DATA** | |
| Max. Current Rating | 3.0 A |
| Typical Continuity Resistance | ≤ 30 mOhm |
| **MATERIALS** | |
| Barrel | Bronze, gold-plated |
| Spring | Spring Steel, gold-plated |
| Plunger | Steel, CuBe |
| Receptacle | Bronze, gold-plated |
| **RECOMMENDED DIAMETER OF DRILL** | |
| HP 2361.1 (Trolitax) | 0.86 mm |
| with pressed-in Ring | 0.93 mm |
| HGW 2372 (Glass filled material) | 0.88 mm |
| with pressed-in Ring | 0.94 mm |

**TIP STYLE · DIAMETER · PLATING**



| A | B | C | D | D |
|---|---|---|---|---|
| 0.90 Au | 0.49C Au | 0.90C Au | 0.49 Au | 0.85C Au |



| H |
|---|
| 0.90 Au<br>1.50 Au |

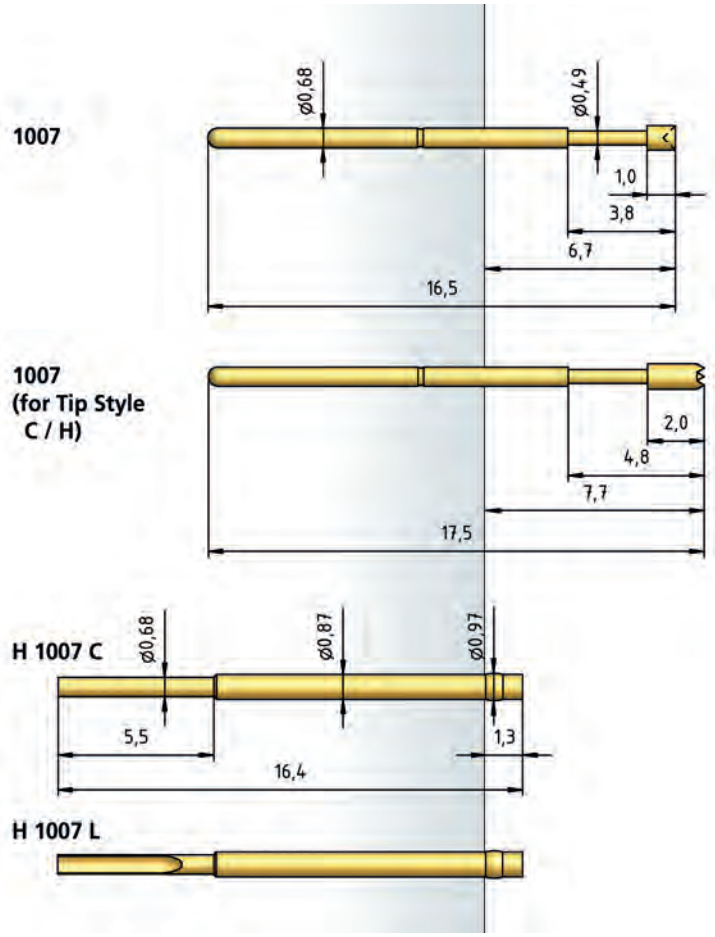


## HOW TO ORDER

| 1007 | - | A | - | 0.7 N | - | Au | - | 0.9 | C |
|---|---|---|---|---|---|---|---|---|---|
| 1 | | 2 | | 3 | | 4 | | 5 | 6 |

1 Series 2 Tip Style 3 Spring Force 4 Tip Plating 5 Tip Diameter
6 Tip Material (only for CuBe)

L'IMPULSION
Retrouvez nous sur
www.limpulsion.fr

# Standard-Test Probe 50 mil / 1.27 mm

# Series 1007.50



| TIP STYLE · DIAMETER · PLATING |
|---|
|  |
| **G3** |
| 0.51 Rh |

| BENEFIT |
|---|
| Universal field of application |
| Compact design |
| Short travel |
| Contacting of assembled PCBs |

| MECHANICAL DATA | |
|---|---|
| Center | 1.27 mm / 50 mil |
| Temperature Range | -30 °C - +120 °C |
| Full Travel | 2.00 mm |
| Working Travel | 1.35 mm |
| Pre-Loaded Spring Force | 0.35 N |
| Spring Force at Working Travel | 0.75 N |

| ELECTRICAL DATA | |
|---|---|
| Max. Current Rating | 3.0 A |
| Typical Continuity Resistance | ≤ 75 mOhm |

| MATERIALS | |
|---|---|
| Barrel | Bronze, gold-plated |
| Spring | Spring Steel, gold-plated |
| Plunger | Steel, rhodium plated |
| Receptacle | Bronze, gold-plated |

| RECOMMENDED DIAMETER OF DRILL | |
|---|---|
| HP 2361.1 (Trolitax) | 0.84 mm |
| HGW 2372 | 0.86 mm |

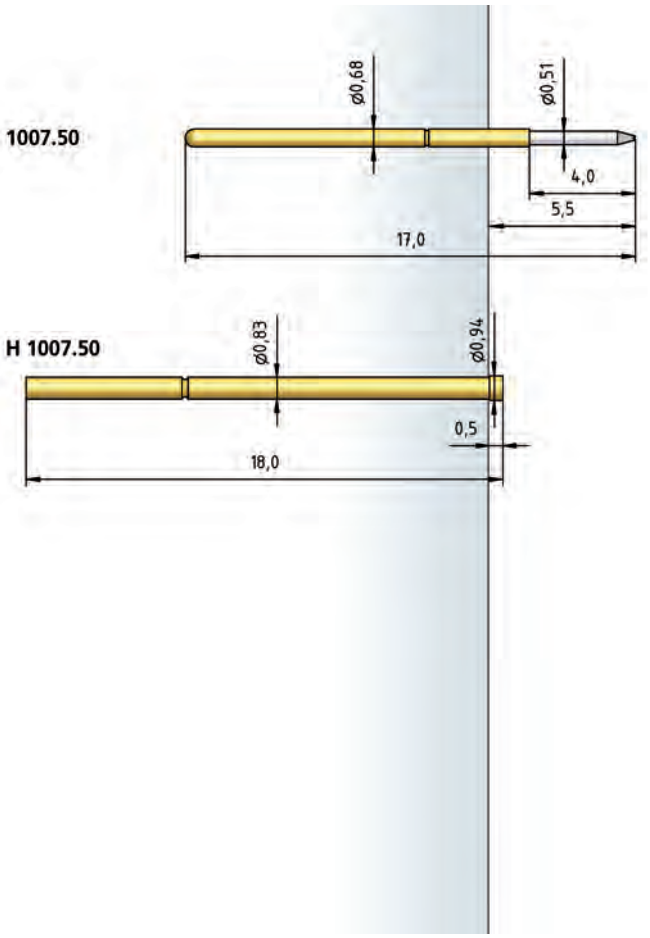


## HOW TO ORDER

| 1007 | .50 | - | G3 | - | 0.75 N | - | Rh | - | 0.51 |
|---|---|---|---|---|---|---|---|---|---|
| 1 | 2 | | 3 | | 4 | | 5 | | 6 |

1 Series 2 Variant 3 Tip Style 4 Spring Force 5 Tip Plating 6 Tip Diameter

L'IMPULSION Retrouvez nous sur www.limpulsion.fr

# Series 1007.60

Standard-Test Probe 50 mil / 1.27 mm

| BENEFIT | |
|---|---|
| Universal field of application | |
| Compact design | |
| Short travel | |
| Contacting of assembled PCBs | |
| **MECHANICAL DATA** | |
| Center | 1.27 mm / 50 mil |
| Temperature Range | -30 °C - +120 °C |
| Full Travel | 2.54 mm |
| Pre-Loaded Spring Force | 0.20/ 0.30 N |
| Spring Force at Full Travel | 0.80/ 1.50 N |
| **ELECTRICAL DATA** | |
| Max. Current Rating | 3.0 A |
| Typical Continuity Resistance | ≤ 50 mOhm |
| **MATERIALS** | |
| Barrel | Bronze, gold-plated |
| Spring | Spring Steel, gold-plated |
| Plunger | CuBe, rhodium plated |
| Receptacle | Bronze, gold-plated |
| Wire AWG 30 (Blue) | Copper, silver-plated, insulated |
| **RECOMMENDED DIAMETER OF DRILL** | |
| HP 2361.1 (Trolitax) | 0.87 mm |
| with pressed-in Ring | 0.95 mm |
| HGW 2372 (Glass filled material) | 0.87 mm |
| with pressed-in Ring | 0.95 mm |

**TIP STYLE · DIAMETER · PLATING**



| B | E | G3 | K |
|---|---|---|---|
| 0.50C Rh | 0.80C Rh | 0.50C Rh | 0.90C Rh |

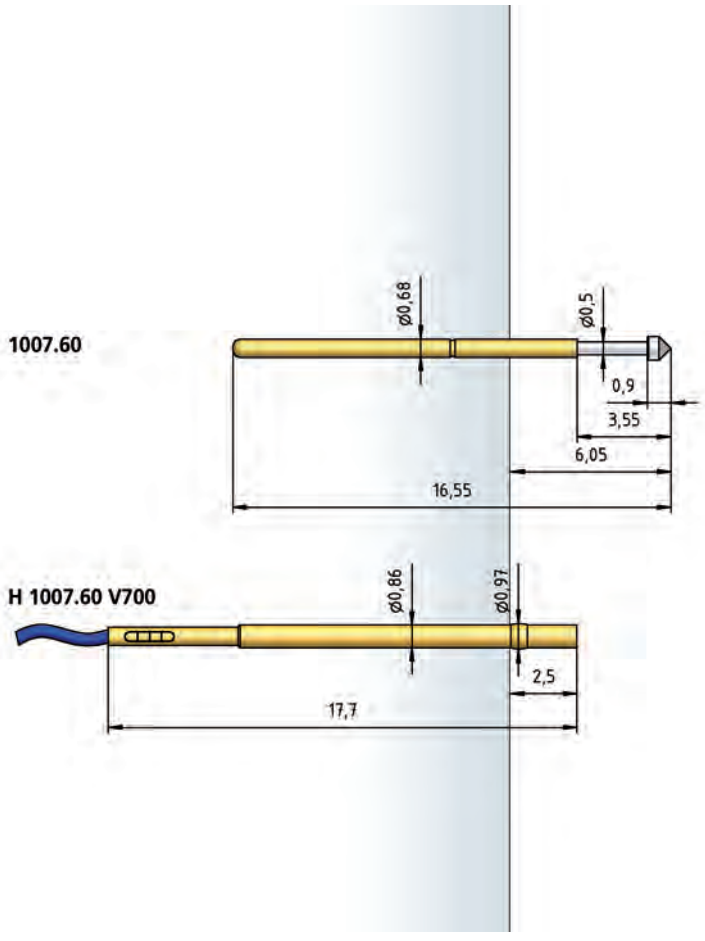


## HOW TO ORDER

| 1007 | .60 | - | K | - | 0.8 N | - | Rh | - | 0.9 | C |
|---|---|---|---|---|---|---|---|---|---|---|
| 1 | 2 | | 3 | | 4 | | 5 | | 6 | 7 |

1 Series 2 Variant 3 Tip Style 4 Spring Force 5 Tip Plating 6 Tip Diameter 7 Tip Material (only for CuBe)

# Standard-Test Probe 50 mil / 1.27 mm

# Series 1007.70



## TIP STYLE · DIAMETER · PLATING



| B | C | D |
|---|---|---|
| 0.53C Au | 0.89C Au | 0.89C Au |

## BENEFIT

| |
|---|
| Universal field of application |
| Compact design |
| Short travel |
| Contacting of assembled PCBs |

## MECHANICAL DATA

| | |
|---|---|
| Center | 1.27 mm / 50 mil |
| Temperature Range | -30 °C - +120 °C |
| Full Travel | 1.27 mm |
| Pre-Loaded Spring Force | 0.17/ 0.40/ 0.50 N |
| Spring Force at Full Travel | 0.35/ 0.90/ 1.40 N |

## ELECTRICAL DATA

| | |
|---|---|
| Max. Current Rating | 3.0 A |
| Typical Continuity Resistance | ≤ 25 mOhm |

## MATERIALS

| | |
|---|---|
| Barrel | Bronze, gold-plated |
| Spring | Stainless Steel, Spring Steel, gold-plated |
| Plunger | CuBe, gold-plated |
| Receptacle | Bronze, gold-plated |
| Wire AWG 30 (Blue) | Copper, silver-plated, insulated |

## RECOMMENDED DIAMETER OF DRILL

| | |
|---|---|
| HP 2361.1 (Trolitax) | 0.87 mm |
| with pressed-in Ring | 0.95 mm |
| HGW 2372 (Glass filled material) | 0.87 mm |
| with pressed-in Ring | 0.95 mm |

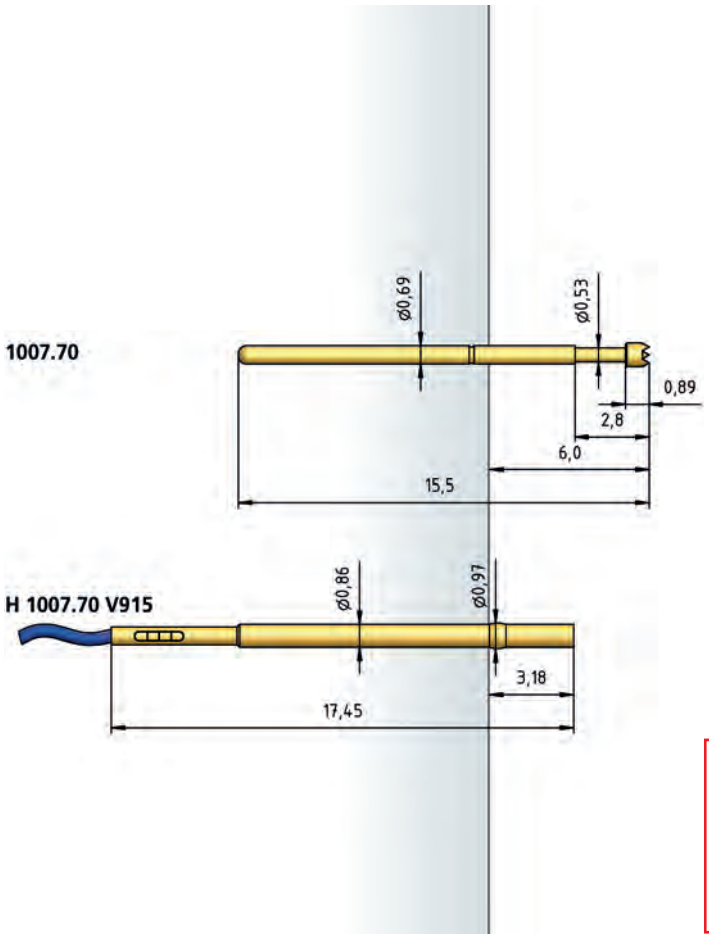


## HOW TO ORDER

| 1007 | .70 | - | C | - | 0.35 N | - | Au | - | 0.89 | C |
|---|---|---|---|---|---|---|---|---|---|---|
| 1 | 2 | | 3 | | 4 | | 5 | | 6 | 7 |

1 Series 2 Variant 3 Tip Style 4 Spring Force 5 Tip Plating 6 Tip Diameter 7 Tip Material (only for CuBe)

# Series 1010

Standard-Test Probe 75 mil / 1.91 mm

| BENEFIT | |
|---|---|
| Universal field of application | |
| Compact design | |
| Short travel | |
| Contacting of assembled PCBs | |
| **MECHANICAL DATA** | |
| Center | 1.91 mm / 75 mil |
| Temperature Range | -30 °C - +120 °C |
| Full Travel | 3.00 mm |
| Working Travel | 2.40 mm |
| Pre-Loaded Spring Force | 0.30/ 0.50 N |
| Spring Force at Working Travel | 1.50/ 2.25 N |
| **ELECTRICAL DATA** | |
| Max. Current Rating | 2.0 A |
| Typical Continuity Resistance | ≤ 20 mOhm |
| **MATERIALS** | |
| Barrel | Bronze, gold-plated |
| Spring | Spring Steel, Stainless Steel, gold-plated |
| Plunger | Steel, CuBe |
| Receptacle | Bronze, gold-plated |
| **RECOMMENDED DIAMETER OF DRILL** | |
| HP 2361.1 (Trolitax) | 1.30 mm |
| with pressed-in Ring | 1.46 mm |
| HGW 2372 (Glass filled material) | 1.32 mm |
| with pressed-in Ring | 1.47 mm |
| **HIGH-TEMPERATURE APPLICATIONS** | |
| Temperature Range | -40 °C - +250 °C |
| Pre-Loaded Spring Force | 0.20 N |
| Spring Force at Working Travel (Order Index E) | 0.80 N |

**TIP STYLE · DIAMETER · PLATING**

| A | B | B1 | C | D |
|---|---|---|---|---|
| 1.50 Au | 0.45 Au/Ni | 0.70 Au | 1.50C Au | 0.50 Au |

| D | D2 | D2 | DF | F |
|---|---|---|---|---|
| 0.65 Au<br>1.00 Au | 0.40 Au | 0.60 Au | 1.00 Au | 1.00 Au<br>1.50 Ni |

| G | H |
|---|---|
| 1.50 Rh | 1.50 Ni |

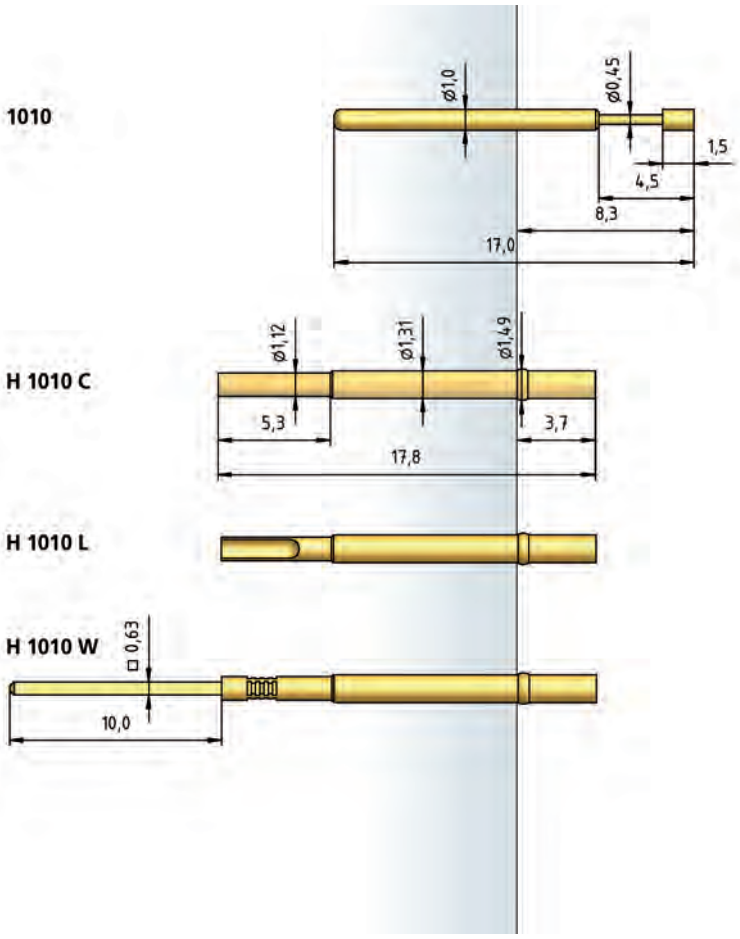


## HOW TO ORDER

| 1010 | - | A | - | 0.8 N | E | - | Au | - | 1.5 |
|---|---|---|---|---|---|---|---|---|---|
| 1 | | 2 | | 3 | 4 | | 5 | | 6 |

1 Series 2 Tip Style 3 Spring Force 4 High Temperature 5 Tip Plating 6 Tip Diameter

L'IMPULSION Retrouvez nous sur www.limpulsion.fr

# Standard-Test Probe 75 mil / 1.91 mm

# Series 1010.50



## TIP STYLE · DIAMETER · PLATING



| A | B | G3 | K |
|---|---|---|---|
| 0.72C Rh | 0.72C Rh | 0.72C Rh | 1.30C Rh<br>1.50C Rh |

## BENEFIT

| |
|---|
| Universal field of application |
| Compact design |
| Short travel |
| Contacting of assembled PCBs |

## MECHANICAL DATA

| | |
|---|---|
| Center | 1.91 mm / 75 mil |
| Temperature Range | -40 °C - +250 °C |
| Full Travel | 2.54 mm |
| Spring Force at Full Travel | see High-Temperature Applications |

## ELECTRICAL DATA

| | |
|---|---|
| Max. Current Rating | 3.0 A |
| Typical Continuity Resistance | ≤ 50 mOhm |

## MATERIALS

| | |
|---|---|
| Barrel | Bronze, gold-plated |
| Spring | Stainless Steel, unplated |
| Plunger | CuBe, rhodium plated |
| Receptacle | Bronze, gold-plated |

## RECOMMENDED DIAMETER OF DRILL

| | |
|---|---|
| HP 2361.1 (Trolitax) | 1.30 mm |
| with pressed-in Ring | 1.40 mm |
| HGW 2372 (Glass filled material) | 1.31 mm |
| with pressed-in Ring | 1.41 mm |

## HIGH-TEMPERATURE APPLICATIONS

| | |
|---|---|
| Temperature Range | -40 °C - +250 °C |
| Pre-Loaded Spring Force | 0.18/ 0.32 N |
| Spring Force at Full Travel (Order Index E) | 0.80/ 1.25 N |

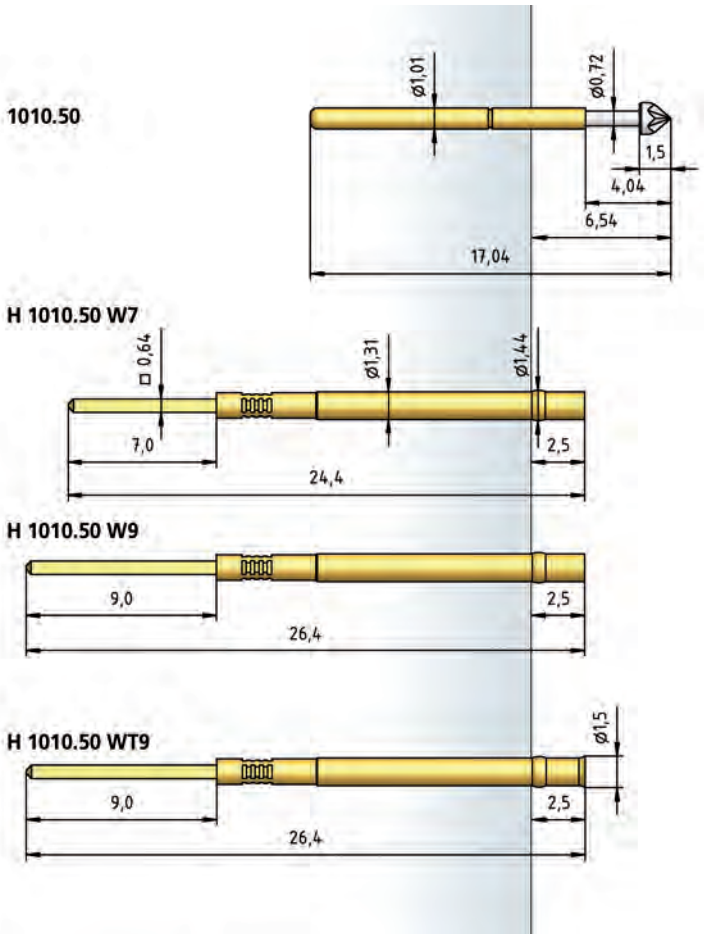


## HOW TO ORDER

| 1010 | .50 | - | K | - | 1.25 N | E | - | Rh | - | 1.5 | C |
|---|---|---|---|---|---|---|---|---|---|---|---|
| 1 | 2 | | 3 | | 4 | 5 | | 6 | | 7 | 8 |

1 Series 2 Variant 3 Tip Style 4 Spring Force 5 High Temperature
6 Tip Plating 7 Tip Diameter 8 Tip Material (only for CuBe)

L'IMPULSION Retrouvez nous sur www.limpulsion.fr

# Series 1011

Standard-Test Probe 75 mil / 1.91 mm

| BENEFIT |
|---|
| Universal field of application |
| Compact design |
| Short travel |
| Contacting of assembled PCBs |

| MECHANICAL DATA | |
|---|---|
| Center | 1.91 mm / 75 mil |
| Temperature Range | -40 °C - +250 °C |
| Full Travel | 4.20 mm |
| Spring Force at Full Travel | see High-Temperature Applications |

| ELECTRICAL DATA | |
|---|---|
| Max. Current Rating | 3.0 A |
| Typical Continuity Resistance | ≤ 50 mOhm |

| MATERIALS | |
|---|---|
| Barrel | Bronze, gold-plated |
| Spring | Stainless Steel, unplated |
| Plunger | CuBe, rhodium plated |
| Receptacle | Bronze, gold-plated |

| RECOMMENDED DIAMETER OF DRILL | |
|---|---|
| HP 2361.1 (Trolitax) | 1.30 mm |
| with pressed-in Ring | 1.40 mm |
| HGW 2372 (Glass filled material) | 1.31 mm |
| with pressed-in Ring | 1.41 mm |

| HIGH-TEMPERATURE APPLICATIONS | |
|---|---|
| Temperature Range | -40 °C - +250 °C |
| Pre-Loaded Spring Force | 0.30/ 0.30 N |
| Spring Force at Full Travel (Order Index E) | 1.10/ 1.50 N |

| TIP STYLE · DIAMETER · PLATING |
|---|
|  |
| **A** |
| 0.72C Rh |

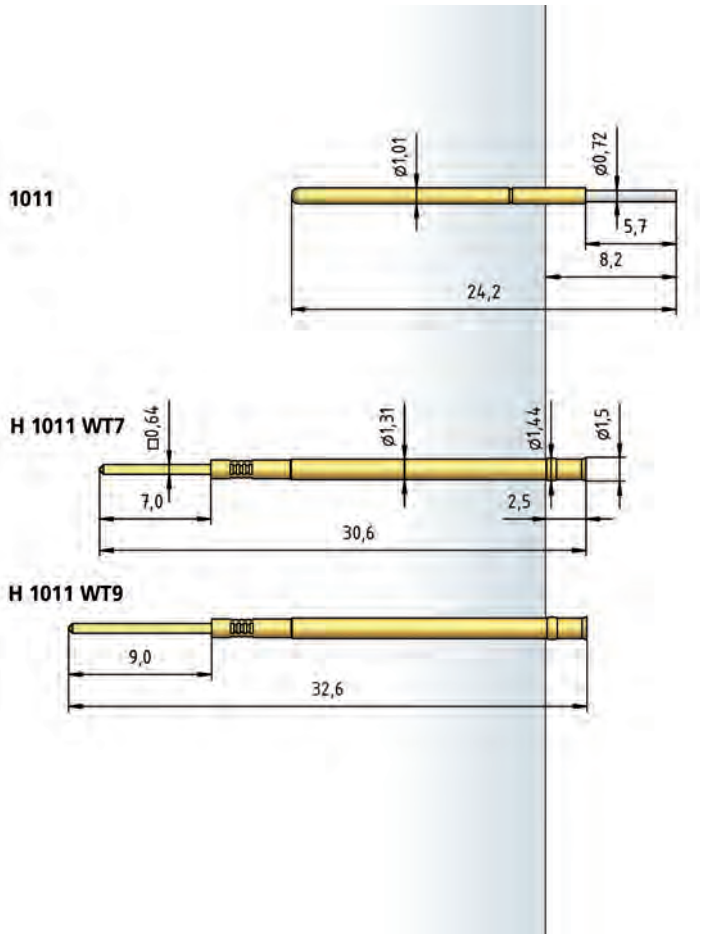


## HOW TO ORDER

| 1011 | - | A | - | 1.1 N | E | - | Rh | - | 0.72 | C |
|---|---|---|---|---|---|---|---|---|---|---|
| 1 | | 2 | | 3 | 4 | | 5 | | 6 | 7 |

1 Series 2 Tip Style 3 Spring Force 4 High Temperature 5 Tip Plating
6 Tip Diameter 7 Tip Material (only for CuBe)

L'IMPULSION Retrouvez nous sur www.limpulsion.fr

# Standard-Test Probe 100 mil / 2.54 mm

# Series 1015



## TIP STYLE · DIAMETER · PLATING

| A | A6 | B | BS | C |
|---|---|---|---|---|
| 1.80 Au/Ni | 1.80C Au | 0.75 Au/ Ni/Rh | 0.38 Au | 1.00 Au<br>1.30C Au<br>1.80C Au/Ni |

| C15 | C1S | C2S | D | D |
|---|---|---|---|---|
| 1.80 Au | 0.90/1.37 Au/ HTK | 1.20/1.80 Au/ HTK | 0.50 Ni | 0.65C Au/Ni<br>0.75 Au/Rh |

| D | E | F | F | G |
|---|---|---|---|---|
| 1.25 Au/Ni | 1.80 Au/Ni | 0.75 Rh | 1.50C Au<br>1.80 Rh | 1.30 Rh<br>1.80 Au/Ni |

| H | K | Q |
|---|---|---|
| 1.30 Rh<br>1.80 Au<br>3.00 Rh | 1.80 Au/Ni | 0.75C Au |

| BENEFIT | |
|---|---|
| Universal field of application | |
| Contacting of assembled PCBs | |
| Wide variety of types | |
| **MECHANICAL DATA** | |
| Center | 2.54 mm / 100 mil |
| Full Travel | 4.40 mm |
| Working Travel | 3.50 mm |
| Pre-Loaded Spring Force | 0.25/ 0.40/ 0.40/ 0.30/ 0.70/ 0.60 N |
| Spring Force at Working Travel | 0.70/ 1.00/ 1.50/ 1.70/ 2.50/ 3.00 N |
| **ELECTRICAL DATA** | |
| Max. Current Rating | 5.0 A |
| Typical Continuity Resistance | ≤ 20 mOhm |
| **MATERIALS** | |
| Barrel | Bronze, gold-plated |
| Spring | Spring Steel, gold-plated |
| Plunger | Steel, CuBe |
| Receptacle | Bronze, gold-plated |
| **RECOMMENDED DIAMETER OF DRILL** | |
| HP 2361.1 (Trolitax) | 1.67 mm |
| with pressed-in Ring | 1.75 mm |
| HGW 2372 (Glass filled material) | 1.69 mm |
| with pressed-in Ring | 1.76 mm |

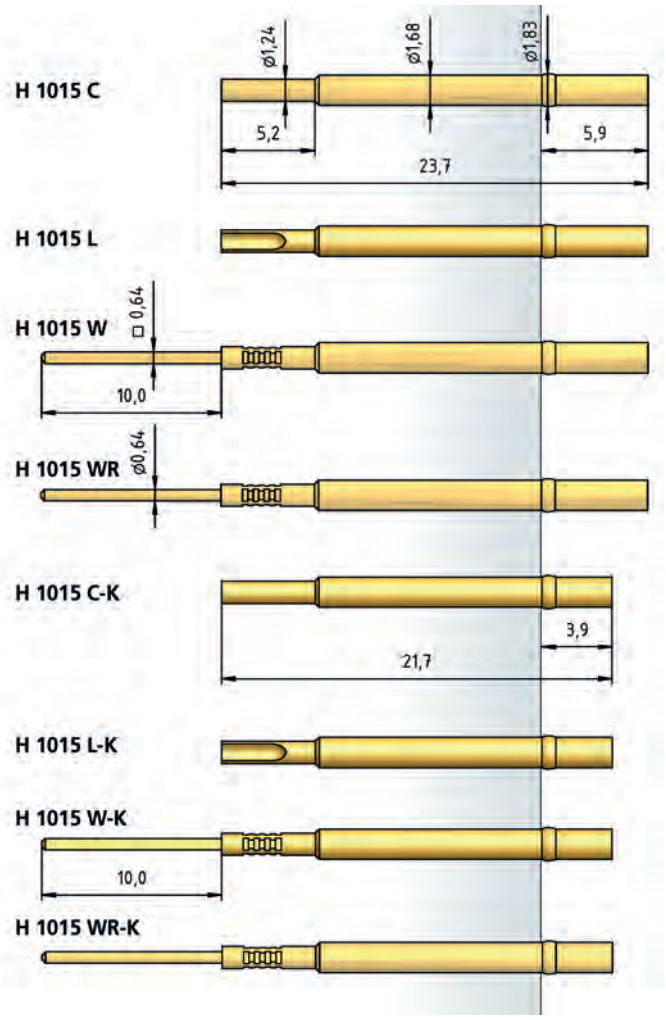


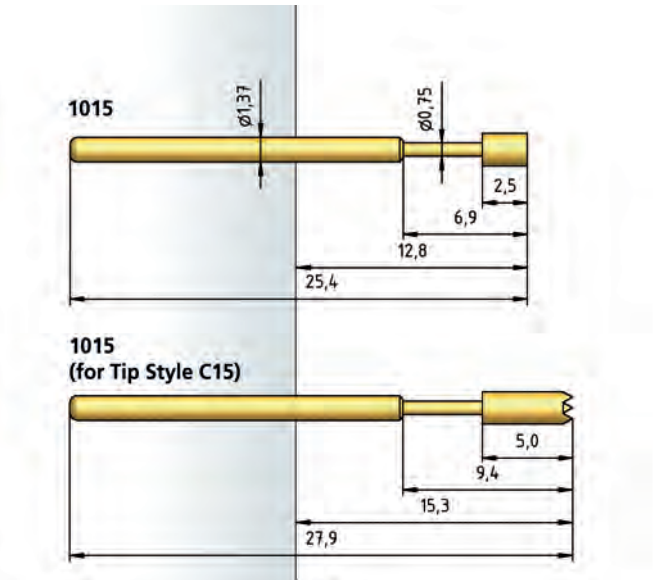


## HOW TO ORDER

| 1015 | - | C | - | 1.5 N | - | Au | - | 1.8 | C |
|---|---|---|---|---|---|---|---|---|---|
| 1 | | 2 | | 3 | | 4 | | 5 | 6 |

1 Series 2 Tip Style 3 Spring Force 4 Tip Plating 5 Tip Diameter
6 Ring Contact Material (only for CuBe)

# Series 1015.50

Standard-Test Probe 100 mil / 2.54 mm

| BENEFIT | |
|---|---|
| Universal field of application | |
| Contacting of assembled PCBs | |
| **MECHANICAL DATA** | |
| Center | 2.54 mm / 100 mil |
| Temperature Range | -40 °C - +250 °C |
| Full Travel | 4.20 mm |
| Spring Force at Full Travel | see High-Temperature Applications |
| **ELECTRICAL DATA** | |
| Max. Current Rating | 3.0 A |
| Typical Continuity Resistance | ≤ 50 mOhm |
| **MATERIALS** | |
| Barrel | Bronze, gold-plated |
| Spring | Stainless Steel, unplated |
| Plunger | CuBe, rhodium plated |
| Receptacle | Bronze, gold-plated |
| **RECOMMENDED DIAMETER OF DRILL** | |
| HP 2361.1 (Trolitax) | 1.66 mm |
| with pressed-in Ring | 1.81 mm |
| HGW 2372 (Glass filled material) | 1.67 mm |
| with pressed-in Ring | 1.82 mm |
| **HIGH-TEMPERATURE APPLICATIONS** | |
| Temperature Range | -40 °C - +250 °C |
| Pre-Loaded Spring Force | 0.35/ 0.50/ 0.70 N |
| Spring Force at Full Travel (Order Index E) | 1.00/ 1.50/ 2.50 N |

**TIP STYLE · DIAMETER · PLATING**



| A |
|---|
| 1.35C Rh |

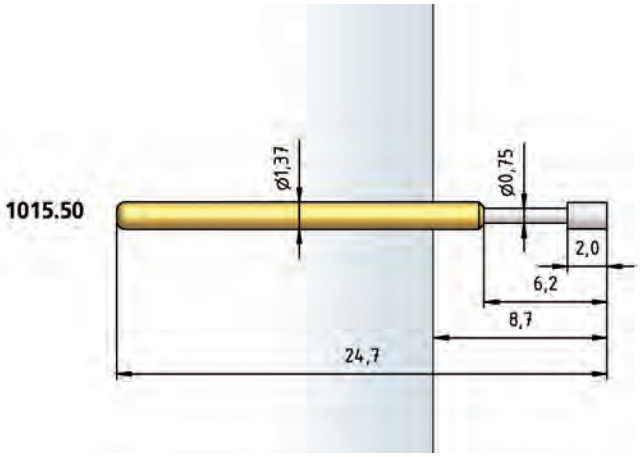


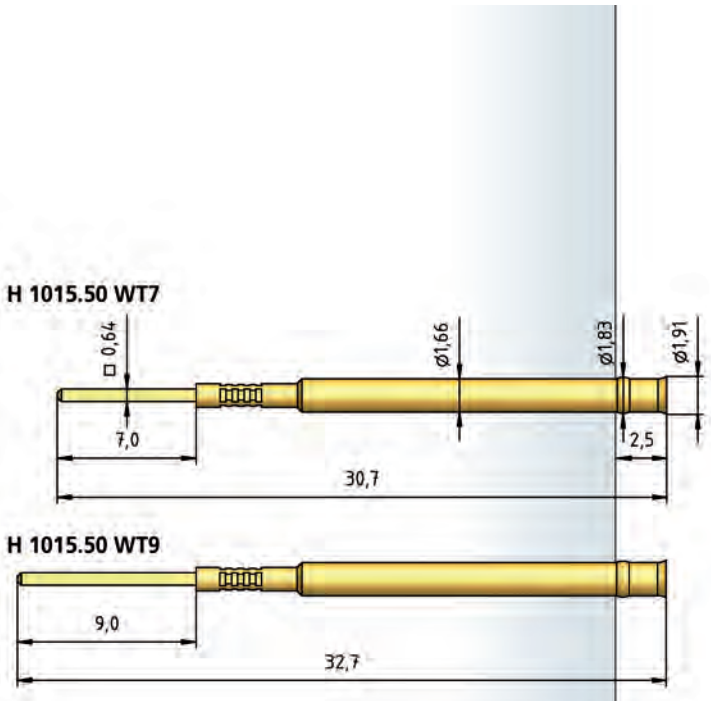


## HOW TO ORDER

| 1015 | .50 | - | A | - | 1.5 N | E | - | Rh | - | 1.35 | C |
|---|---|---|---|---|---|---|---|---|---|---|---|
| 1 | 2 | | 3 | | 4 | 5 | | 6 | | 7 | 8 |

1 Series 2 Variant 3 Tip Style 4 Spring Force 5 High Temperature 6 Tip Plating 7 Tip Diameter 8 Tip Material (only for CuBe)

L'IMPULSION Retrouvez nous sur www.limpulsion.fr

# Standard-Test Probe 100 mil / 2.54 mm

# Series 1016



## TIP STYLE · DIAMETER · PLATING



| A | B | C | D | F |
|---|---|---|---|---|
| 1.80 Au | 1.00 Au | 1.80 Ni | 1.00 Au | 1.80 Au |



| H | K | Q |
|---|---|---|
| 1.80 Rh | 1.80 Rh | 1.80 Ni/Rh |

| BENEFIT | |
|---|---|
| Universal field of application | |
| Contacting of assembled PCBs | |
| **MECHANICAL DATA** | |
| Center | 2.54 mm / 100 mil |
| Temperature Range | -30 °C - +120 °C |
| Full Travel | 4.40 mm |
| Working Travel | 3.50 mm |
| Pre-Loaded Spring Force | 0.40/ 0.70/ 0.90 N |
| Spring Force at Working Travel | 1.50/ 2.25/ 3.00 N |
| **ELECTRICAL DATA** | |
| Max. Current Rating | 3.0 A |
| Typical Continuity Resistance | ≤ 30 mOhm |
| **MATERIALS** | |
| Barrel | Bronze, gold-plated |
| Spring | Spring Steel, gold-plated |
| Plunger | Steel |
| Receptacle | Bronze, gold-plated |
| **RECOMMENDED DIAMETER OF DRILL** | |
| HP 2361.1 (Trolitax) | 1.67 mm |
| with pressed-in Ring | 1.75 mm |
| HGW 2372 (Glass filled material) | 1.69 mm |
| with pressed-in Ring | 1.76 mm |

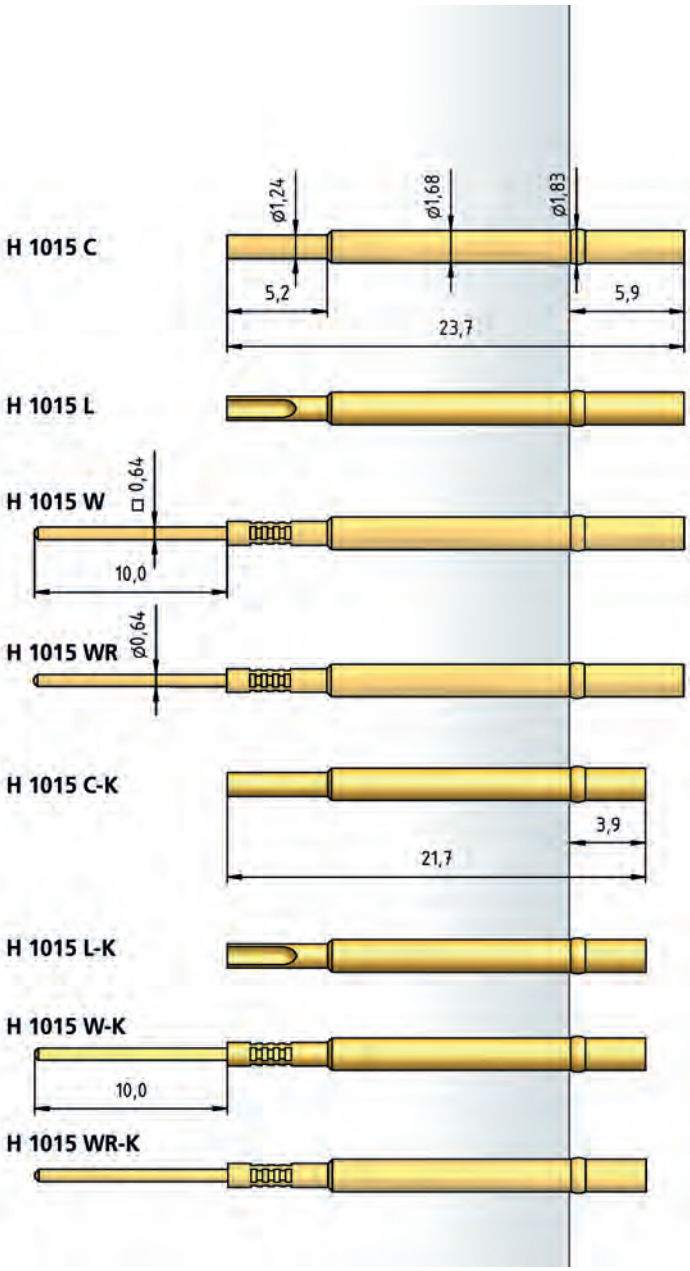


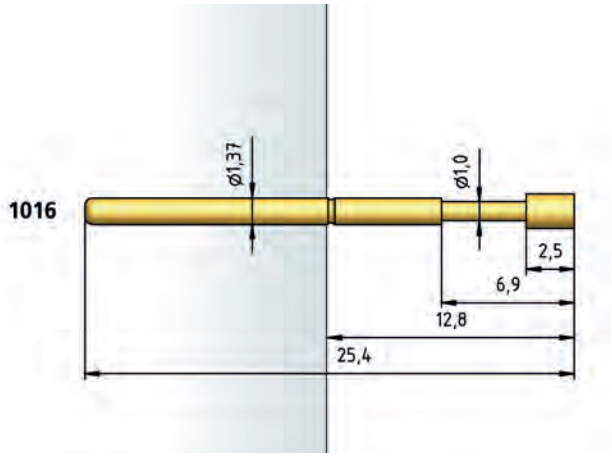


## HOW TO ORDER

| 1016 | - | C | - | 1.5 N | - | Au | - | 1.8 |
|---|---|---|---|---|---|---|---|---|
| 1 | | 2 | | 3 | | 4 | | 5 |

1 Series 2 Tip Style 3 Spring Force 4 Tip Plating 5 Tip Diameter

L'IMPULSION Retrouvez nous sur www.limpulsion.fr

# Series 1018

Standard-Test Probe 100 mil / 2.54 mm

| BENEFIT | |
|---|---|
| Universal field of application | |
| Contacting of assembled PCBs | |
| **MECHANICAL DATA** | |
| Center | 2.54 mm / 100 mil |
| Temperature Range | -30 °C - +120 °C |
| Full Travel | 4.40 mm |
| Working Travel | 3.50 mm |
| Pre-Loaded Spring Force | 0.40/ 0.70/ 0.90 N |
| Spring Force at Working Travel | 1.50/ 2.25/ 3.00 N |
| **ELECTRICAL DATA** | |
| Max. Current Rating | 3.0 A |
| Typical Continuity Resistance | ≤ 30 mOhm |
| **MATERIALS** | |
| Barrel | Bronze, gold-plated |
| Spring | Spring Steel, gold-plated |
| Plunger | Steel |
| Receptacle | Bronze, gold-plated |
| **RECOMMENDED DIAMETER OF DRILL** | |
| HP 2361.1 (Trolitax) | 1.67 mm |
| with pressed-in Ring | 1.75 mm |
| HGW 2372 (Glass filled material) | 1.69 mm |
| with pressed-in Ring | 1.76 mm |

**TIP STYLE · DIAMETER · PLATING**



| K | K6 | TA |
|---|---|---|
| 1.90 Ni | 1.90 Ni | 1.20 Rh |
| 2.50 Rh | | 1.90 Rh |
| 3.50 Ni | | |

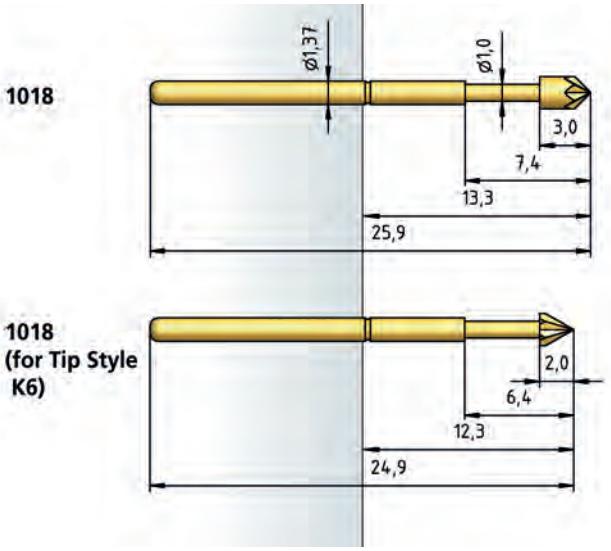


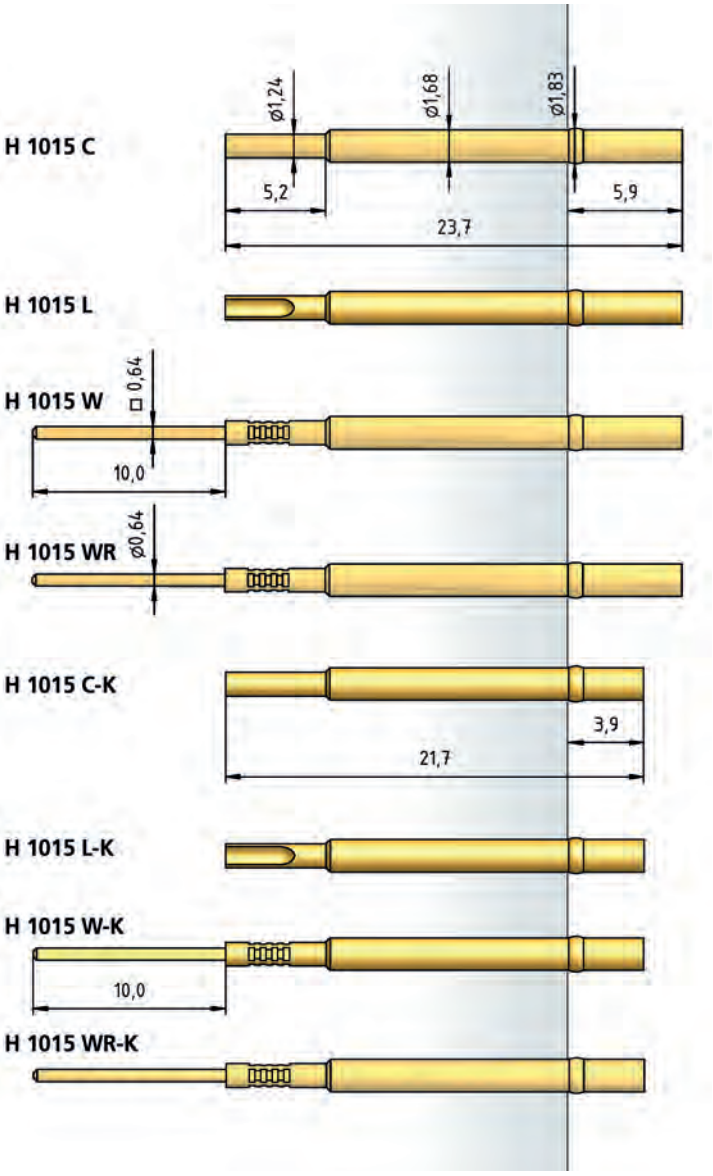


## HOW TO ORDER

| 1018 | - | K | - | 1.5 N | - | Ni | - | 1.9 |
|---|---|---|---|---|---|---|---|---|
| 1 | | 2 | | 3 | | 4 | | 5 |

1 Series 2 Tip Style 3 Spring Force 4 Tip Plating 5 Tip Diameter

L'IMPULSION Retrouvez nous sur www.limpulsion.fr

# Standard-Test Probe 100 mil / 2.54 mm

# Series 1018.06



## TIP STYLE · DIAMETER · PLATING



| G6 | H6 |
|---|---|
| 1.54 Au | 1.90C Au |

| BENEFIT | |
|---|---|
| Universal field of application | |
| Contacting of assembled PCBs | |
| **MECHANICAL DATA** | |
| Center | 2.54 mm / 100 mil |
| Temperature Range | -30 °C - +120 °C |
| Full Travel | 4.10 mm |
| Working Travel | 2.70 mm |
| Pre-Loaded Spring Force | 0.60 N |
| Spring Force at Working Travel | 1.80 N |
| **ELECTRICAL DATA** | |
| Max. Current Rating | 3.0 A |
| Typical Continuity Resistance | ≤ 30 mOhm |
| **MATERIALS** | |
| Barrel | Bronze, gold-plated |
| Spring | Spring Steel, gold-plated |
| Plunger | Steel |
| Receptacle | Bronze, gold-plated |
| **RECOMMENDED DIAMETER OF DRILL** | |
| HP 2361.1 (Trolitax) | 1.67 mm |
| with pressed-in Ring | 1.75 mm |
| HGW 2372 (Glass filled material) | 1.69 mm |
| with pressed-in Ring | 1.76 mm |

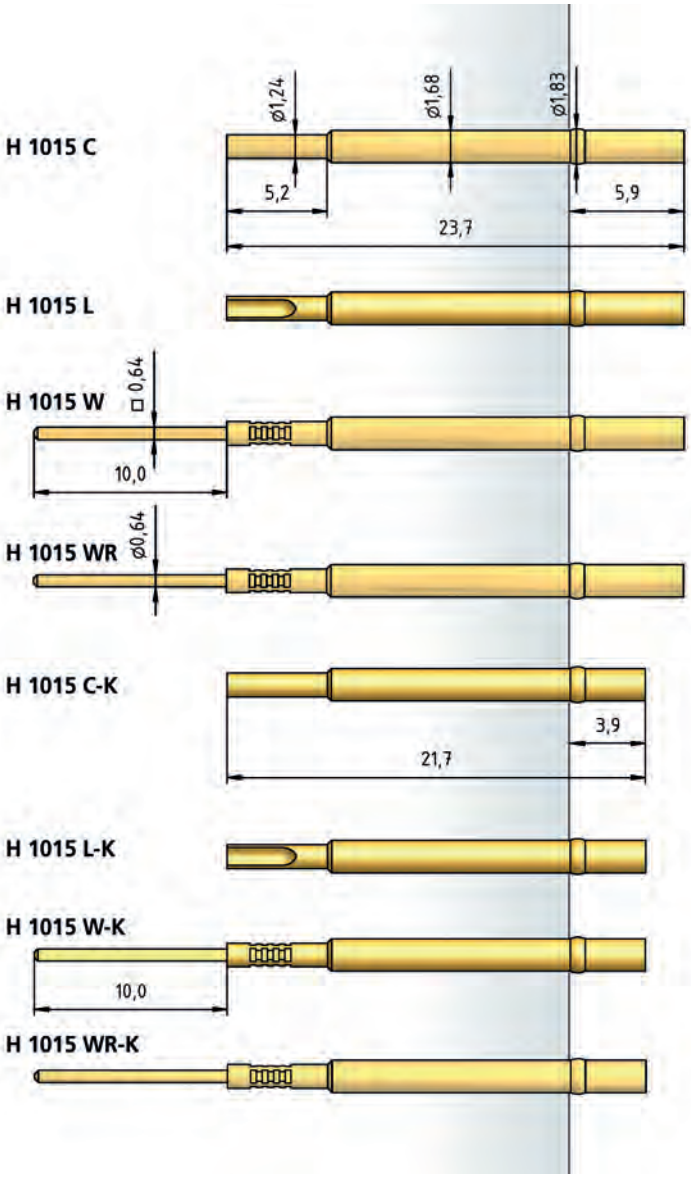


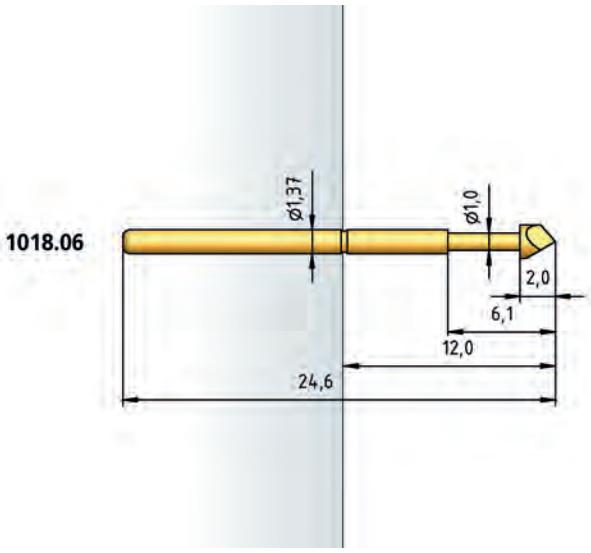


## HOW TO ORDER

| 1018 | .06 | - | H6 | - | 1.0 N | - | Au | - | 1.9 | C |
|---|---|---|---|---|---|---|---|---|---|---|
| 1 | 2 | | 3 | | 4 | | 5 | | 6 | 7 |

1 Series 2 Variant 3 Tip Style 4 Spring Force 5 Tip Plating 6 Tip Diameter 7 Tip Material (only for CuBe)

# STANDARD-TEST PROBES

## CENTER > 100 mil / 2.54 mm

**The range of universal Test Probes for Centers > 100 mil comprises types for centers up to 177 mil / 4.75 mm.**

They can be used for ICT/FTs (in-circuit test or function test) of components, burn-in / run-in tests, and for applications up to the testing of connectors on cable harnesses for the automotive industry. The use of suitable probes allows temperature ranges from -30°C up to 250°C to be achieved (see page 14).

L'IMPULSION
Retrouvez nous sur
www.limpulsion.fr

| SERIES | CENTER | PAGE |
|---|---|---|
| 1030 | 125 mil / 3.18 mm | 52 |
| 1054 | 138 mil / 3.50 mm | 53 |
| 1040 | 160 mil / 4.00 mm | 54 |
| 1050 | 160 mil / 4.00 mm | 55 |
| 1060 | 160 mil / 4.00 mm | 56 |
| 1051 · 1061 | 160 mil / 4.00 mm | 57 |
| 1041 · 1041/W | 177 mil / 4.50 mm | 58 |
| 1042 | 177 mil / 4.50 mm | 59 |
| 1055 | 177 mil / 4.50 mm | 60 |






L'IMPULSION Retrouvez nous sur www.limpulsion.fr

# Series 1030

Standard-Test Probe 125 mil / 3.18 mm

| BENEFIT | |
|---|---|
| Stable design | |
| Height-adjustable installation by using receptacle with press ring | |
| Contacting of assembled PCBs | |
| Universal applications | |
| **MECHANICAL DATA** | |
| Center | 3.18 mm / 125 mil |
| Temperature Range | -30 °C - +120 °C |
| Full Travel | 6.30 mm |
| Working Travel | 5.00 mm |
| Pre-Loaded Spring Force | 0.40/ 0.60/ 0.70 N |
| Spring Force at Working Travel | 1.50/ 2.25/ 3.00 N |
| **ELECTRICAL DATA** | |
| Max. Current Rating | 5.0 A |
| Typical Continuity Resistance | ≤ 20 mOhm |
| **MATERIALS** | |
| Barrel | Bronze, gold-plated |
| Spring | Spring Steel, gold-plated |
| Plunger | Steel |
| Receptacle | Bronze, gold-plated |
| **RECOMMENDED DIAMETER OF DRILL** | |
| HP 2361.1 (Trolitax) | 2.32 mm |
| with pressed-in Ring | 2.54 mm |
| HGW 2372 (Glass filled material) | 2.34 mm |
| with pressed-in Ring | 2.56 mm |

**TIP STYLE · DIAMETER · PLATING**



| A | B | C | D | E |
|---|---|---|---|---|
| 1.30 Rh<br>2.50 Au | 1.30 Au | 2.50 Au/Ni | 1.30 Au<br>1.60 Au/Ni<br>2.50 Au | 2.50 Au |



| F | G | H |
|---|---|---|
| 2.50 Au/Ni<br>4.00 Au | 2.50 Rh | 2.50 Au |

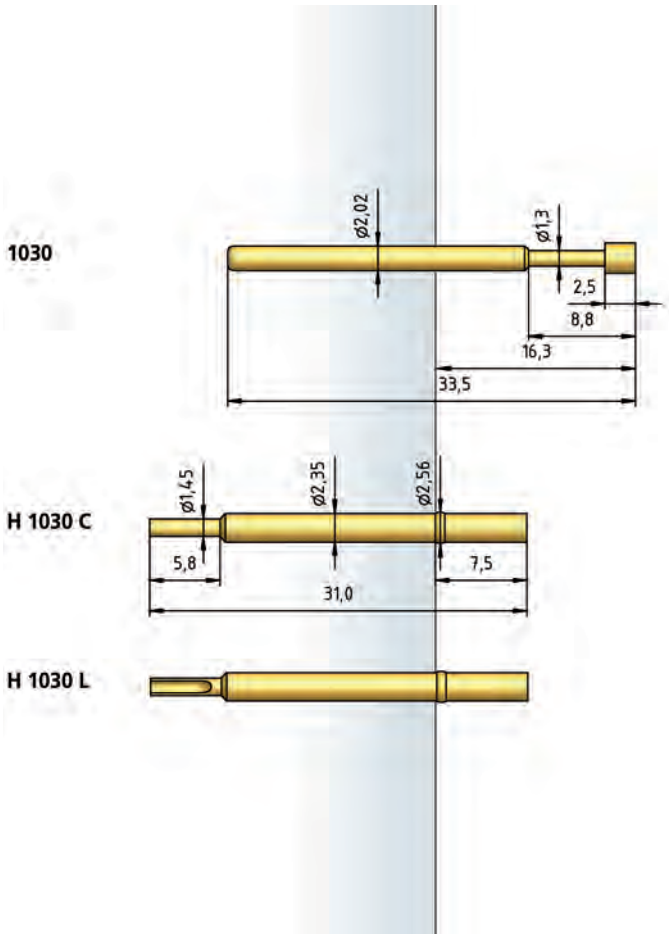


## HOW TO ORDER

| 1030 | - | A | - | 1.5 N | - | Au | - | 2.5 |
|---|---|---|---|---|---|---|---|---|
| 1 | | 2 | | 3 | | 4 | | 5 |

1 Series 2 Tip Style 3 Spring Force 4 Tip Plating 5 Tip Diameter

L'IMPULSION Retrouvez nous sur www.limpulsion.fr

# Standard-Test Probe 138 mil / 3.50 mm

# Series 1054



## TIP STYLE · DIAMETER · PLATING



| A | B | C | D | D |
|---|---|---|---|---|
| 3.96 Au | 1.52 Rh | 3.96 Au | 1.45 Au | 2.36 Au<br>3.96 Au |



| E | F | G |
|---|---|---|
| 2.36 Au/Rh<br>3.96 Au | 1.45 Au | 1.45 Ni |

| BENEFIT | |
|---|---|
| Stable design | |
| Height-adjustable installation by using receptacle with press ring | |
| Contacting of assembled PCBs | |
| Universal applications | |
| **MECHANICAL DATA** | |
| Center | 3.50 mm / 138 mil |
| Temperature Range | -30 °C - +120 °C |
| Full Travel | 6.40 mm |
| Working Travel | 5.10 mm |
| Pre-Loaded Spring Force | 0.40/ 0.40/ 0.50/ 1.00 N |
| Spring Force at Working Travel | 1.00/ 1.50/ 2.50/ 3.00 N |
| **ELECTRICAL DATA** | |
| Max. Current Rating | 5.0 A |
| Typical Continuity Resistance | ≤ 20 mOhm |
| **MATERIALS** | |
| Barrel | Bronze, gold-plated |
| Spring | Spring Steel, gold-plated |
| Plunger | Steel |
| Receptacle | Nickel Silver, gold-plated |
| **RECOMMENDED DIAMETER OF DRILL** | |
| HP 2361.1 (Trolitax) | 2.71 mm |
| with pressed-in Ring | 2.89 mm |
| HGW 2372 (Glass filled material) | 2.67 mm |
| with pressed-in Ring | 2.85 mm |

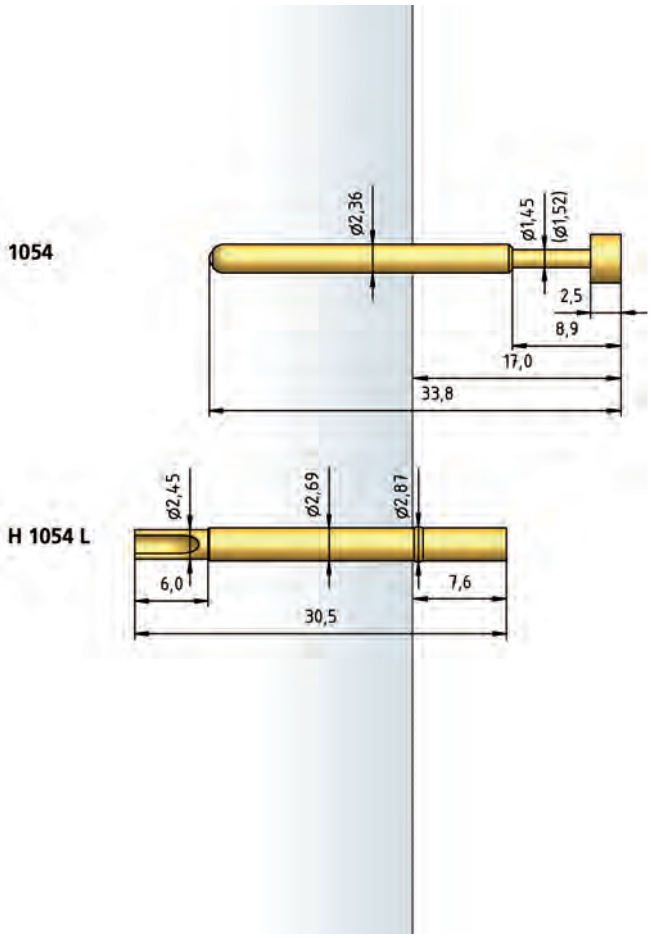


## HOW TO ORDER

| 1054 | - | C | - | 2.5 N | - | Au | - | 3.96 | C |
|---|---|---|---|---|---|---|---|---|---|
| 1 | | 2 | | 3 | | 4 | | 5 | 6 |

1 Series 2 Tip Style 3 Spring Force 4 Tip Plating 5 Tip Diameter
6 Tip Material (only for CuBe)

L'IMPULSION Retrouvez nous sur www.limpulsion.fr

# Series 1040

Standard-Test Probe 160 mil / 4.00 mm

| BENEFIT | |
|---|---|
| Stable design | |
| Height-adjustable installation by using receptacle with press ring | |
| Contacting of assembled PCBs | |
| Universal applications | |
| **MECHANICAL DATA** | |
| Center | 4.00 mm / 160 mil |
| Temperature Range | -30 °C - +120 °C |
| Full Travel | 5.50 mm |
| Working Travel | 4.40 mm |
| Pre-Loaded Spring Force | 0.50/ 0.70/ 0.80/ 1.50 N |
| Spring Force at Working Travel | 1.50/ 2.25/ 3.00/ 5.00 N |
| **ELECTRICAL DATA** | |
| Max. Current Rating | 5.0 A |
| Typical Continuity Resistance | ≤ 30 mOhm |
| **MATERIALS** | |
| Barrel | Brass, gold-plated |
| Spring | Spring Steel, gold-plated |
| Plunger | Steel |
| Receptacle | Brass, gold-plated |
| **RECOMMENDED DIAMETER OF DRILL** | |
| HP 2361.1 (Trolitax) | 2.99 mm |
| HGW 2372 | 3.00 mm |

**TIP STYLE · DIAMETER · PLATING**



| A | B | C | D | E |
|---|---|---|---|---|
| 4.00 Au/Ni | 1.50 Au/Ni | 4.00 Au/Ni | 2.40 Au/Ni | 4.00 Au/Ni |



| F | G | H |
|---|---|---|
| 4.00 Au/Ni | 4.00 Ni | 4.00 Ni |

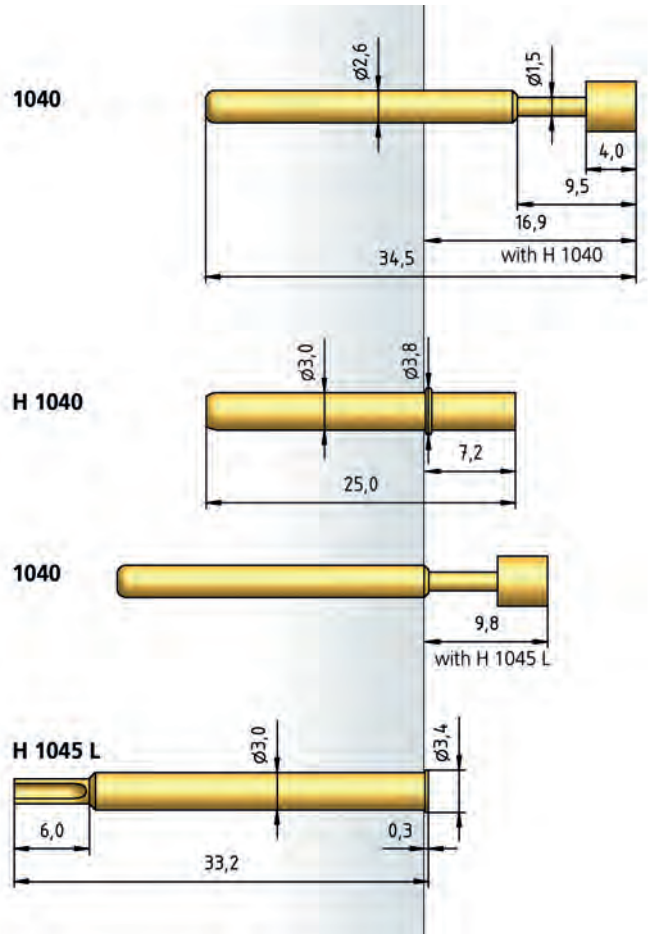


## HOW TO ORDER

| 1040 | - | F | - | 1.5 N | - | Au | - | 4.0 |
|---|---|---|---|---|---|---|---|---|
| 1 | | 2 | | 3 | | 4 | | 5 |

1 Series 2 Tip Style 3 Spring Force 4 Tip Plating 5 Tip Diameter

# Standard-Test Probe 160 mil / 4.00 mm

# Series 1050



## TIP STYLE · DIAMETER · PLATING



| A | A6 | B | BA1 | C |
|---|---|---|---|---|
| 2.30 Au<br>2.50 Ni<br>3.00 Au<br>4.00 Au | 2.50C Au<br>4.00C Au | 1.80 Ni/Rh | 1.50 Ni | 2.30 Au/Ni/Rh<br>2.50 Au/Ni/Rh<br>3.00 Au/Ni/Rh<br>4.00 Au/Ni/Rh |




| C6 | D | D | D | D2 |
|---|---|---|---|---|
| 3.50 Au/Ni | 1.00 Rh | 1.80 Au | 2.30 Au/Ni<br>2.50 Au/Ni | 3.00 Au/Ni |




| D3 | F | F | F3 | G |
|---|---|---|---|---|
| 0.80 Rh<br>1.40 Au | 1.80 Au/Ni | 2.30 Au/Rh<br>2.50 Rh<br>3.00 Au<br>4.00 Rh | 1.00 Rh<br>1.40 Au | 2.30 Rh<br>2.50 Ni/Rh<br>4.00 Au/Ni/Rh |



| H | K | KF |
|---|---|---|
| 2.50 Ni<br>2.60 Ni<br>3.00 Ni/Rh<br>4.20 Rh | 1.80 Rh<br>3.00 Ni | 2.60 Ni<br>4.00 Ni |

## BENEFIT

| |
|---|
| Stable design |
| Contacting of assembled PCBs |
| Universal applications |

## MECHANICAL DATA

| | |
|---|---|
| Center | 4.00 mm / 160 mil |
| Temperature Range | -30 °C - +120 °C |
| Full Travel | 5.50 mm |
| Working Travel | 4.40 mm |
| Pre-Loaded Spring Force | 0.20/ 0.20/ 0.40/ 1.00/ 1.00 N |
| Spring Force at Working Travel | 0.40/ 0.80/ 1.50/ 3.00/ 5.00 N |

## ELECTRICAL DATA

| | |
|---|---|
| Max. Current Rating | 5.0 A |
| Typical Continuity Resistance | ≤ 30 mOhm |

## MATERIALS

| | |
|---|---|
| Barrel | Brass, gold-plated |
| Spring | Spring Steel, gold-plated |
| Plunger | Steel, CuBe, gold-plated |
| Receptacle | Nickel Silver, unplated; Brass, gold-plated |

## RECOMMENDED DIAMETER OF DRILL

| | |
|---|---|
| HP 2361.1 (Trolitax) | 3.00 mm |
| HGW 2372 | 3.01 mm |

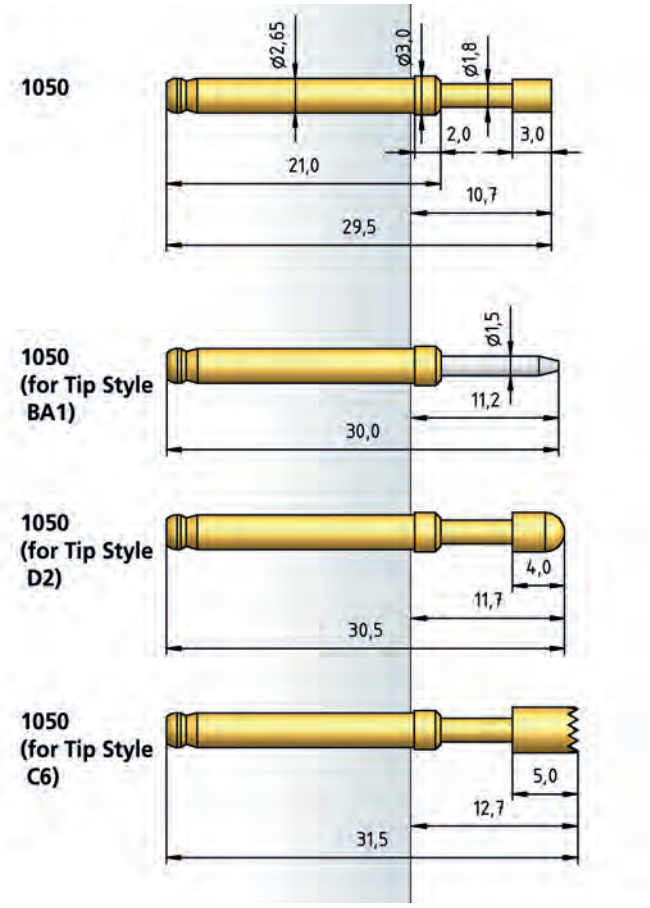


**Receptacles see page 57**

**Distance rings see page 57**

## HOW TO ORDER

| 1050 | - | A6 | - | 1.5 N | - | Au | - | 4.0 | C |
|---|---|---|---|---|---|---|---|---|---|
| 1 | | 2 | | 3 | | 4 | | 5 | 6 |

1 Series 2 Tip Style 3 Spring Force 4 Tip Plating 5 Tip Diameter
6 Tip Material (only for CuBe)

L'IMPULSION Retrouvez nous sur www.limpulsion.fr

# Series 1060

Standard-Test Probe 160 mil / 4.00 mm

| BENEFIT | |
|---|---|
| Stable design | |
| Contacting of assembled PCBs | |
| Universal applications | |
| **MECHANICAL DATA** | |
| Center | 4.00 mm / 160 mil |
| Temperature Range | -30 °C - +120 °C |
| Full Travel | 5.50 mm |
| Working Travel | 4.40 mm |
| Pre-Loaded Spring Force | 0.20/ 0.40/ 0.50/ 0.80/ 0.70 N |
| Spring Force at Working Travel | 0.60/ 1.50/ 2.25/ 3.00/ 5.00 N |
| **ELECTRICAL DATA** | |
| Max. Current Rating | 5.0 A |
| Typical Continuity Resistance | ≤ 30 mOhm |
| **MATERIALS** | |
| Barrel | Brass, gold-plated |
| Spring | Spring Steel, Stainless Steel, gold-plated |
| Plunger | Steel , CuBe, gold-plated |
| Receptacle | Nickel Silver, unplated; Brass, gold-plated |
| **RECOMMENDED DIAMETER OF DRILL** | |
| HP 2361.1 (Trolitax) | 3.00 mm |
| HGW 2372 | 3.01 mm |
| **HIGH-TEMPERATURE APPLICATIONS** | |
| Temperature Range | -40 °C - +250 °C |
| Pre-Loaded Spring Force | 0.40/ 0.50/ 0.80 N |
| Spring Force at Working Travel (Order Index E) | 1.50/ 2.25/ 3.00 N |

## TIP STYLE · DIAMETER · PLATING



| A | A6 | B | BA1 | C |
|---|---|---|---|---|
| 2.30 Au<br>2.50 Ni<br>3.00 Au<br>4.00 Au | 2.50C Au<br>4.00C Au | 1.80 Ni/Rh | 1.50 Ni | 2.30 Au/Ni/Rh<br>2.50 Au/Ni/Rh<br>3.00 Au/Ni/Rh<br>4.00 Au/Ni/Rh |




| C6 | D | D | D | D2 |
|---|---|---|---|---|
| 3.50 Au/Ni | 1.00 Rh | 1.80 Au | 2.30 Au/Ni<br>2.50 Au/Ni | 3.00 Au/Ni |




| D3 | F | F | F3 | G |
|---|---|---|---|---|
| 0.80 Rh<br>1.40 Au | 1.80 Au/Ni | 2.30 Au/Rh<br>2.50 Rh<br>3.00 Au<br>4.00 Rh | 1.00 Rh<br>1.40 Au | 2.30 Rh<br>2.50 Ni/Rh<br>4.00 Au/Ni/Rh |



| H | K | KF |
|---|---|---|
| 2.50 Ni<br>2.60 Ni<br>3.00 Ni/Rh<br>4.20 Rh | 1.80 Rh<br>3.00 Ni | 2.60 Ni<br>4.00 Ni |

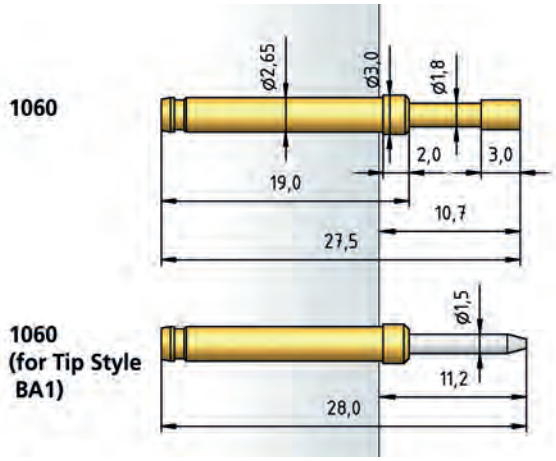


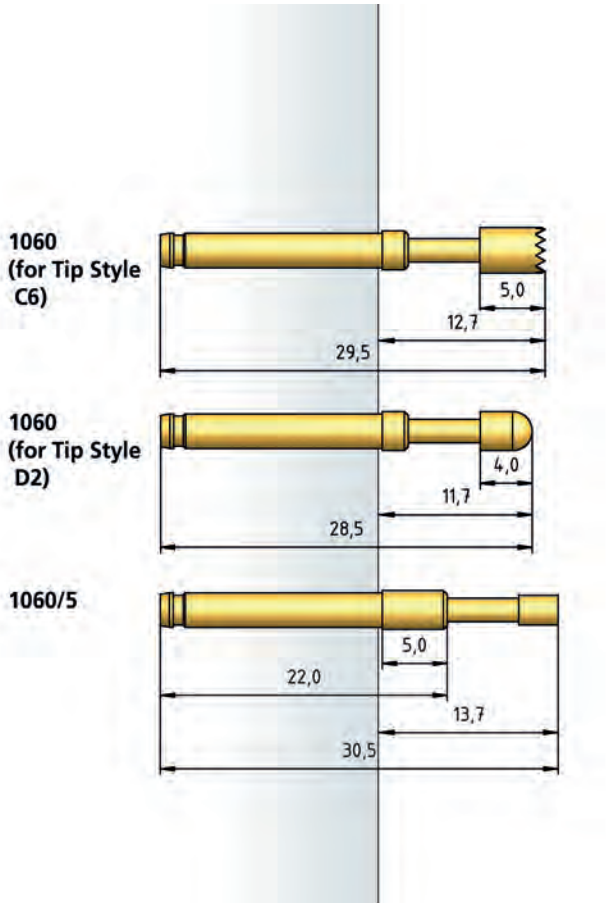


**Receptacles see page 57**

**Distance rings see page 57**

## HOW TO ORDER

| 1060 | - | A6 | - | 1.5 N | E | - | Au | - | 4.0 | C |
|---|---|---|---|---|---|---|---|---|---|---|
| 1 | | 2 | | 3 | 4 | | 5 | | 6 | 7 |

1 Series 2 Tip Style 3 Spring Force 4 High Temperature 5 Tip Plating
6 Tip Diameter 7 Tip Material (only for CuBe)

L'IMPULSION | Retrouvez nous sur www.limpulsion.fr

# Standard-Test Probe 160 mil / 4.00 mm

# Series 1051 • 1061



## TIP STYLE · DIAMETER · PLATING




| B | BA |
|---|---|
| 1.80 Ni | 1.80 Ni |

| BENEFIT |
|---|
| Stable design |
| Increased installation height |
| Contacting of assembled PCBs |
| Universal applications |

| MECHANICAL DATA | |
|---|---|
| Center | 4.00 mm / 160 mil |
| Temperature Range | -30 °C - +120 °C |
| Full Travel | 7.00 mm |
| Working Travel | 5.60 mm |
| Pre-Loaded Spring Force | 0.15/ 0.25/ 0.40/ 0.60 N |
| Spring Force at Working Travel | 0.70/ 0.80/ 1.50/ 3.00 N |

| ELECTRICAL DATA | |
|---|---|
| Max. Current Rating | 5.0 A |
| Typical Continuity Resistance | ≤ 35 mOhm |

| MATERIALS | |
|---|---|
| Barrel | Brass, gold-plated |
| Spring | Spring Steel, gold-plated |
| Plunger | Steel |
| Receptacle | Nickel Silver, unplated; Brass, gold-plated |

| RECOMMENDED DIAMETER OF DRILL | |
|---|---|
| HP 2361.1 (Trolitax) | 3.00 mm |
| HGW 2372 | 3.01 mm |

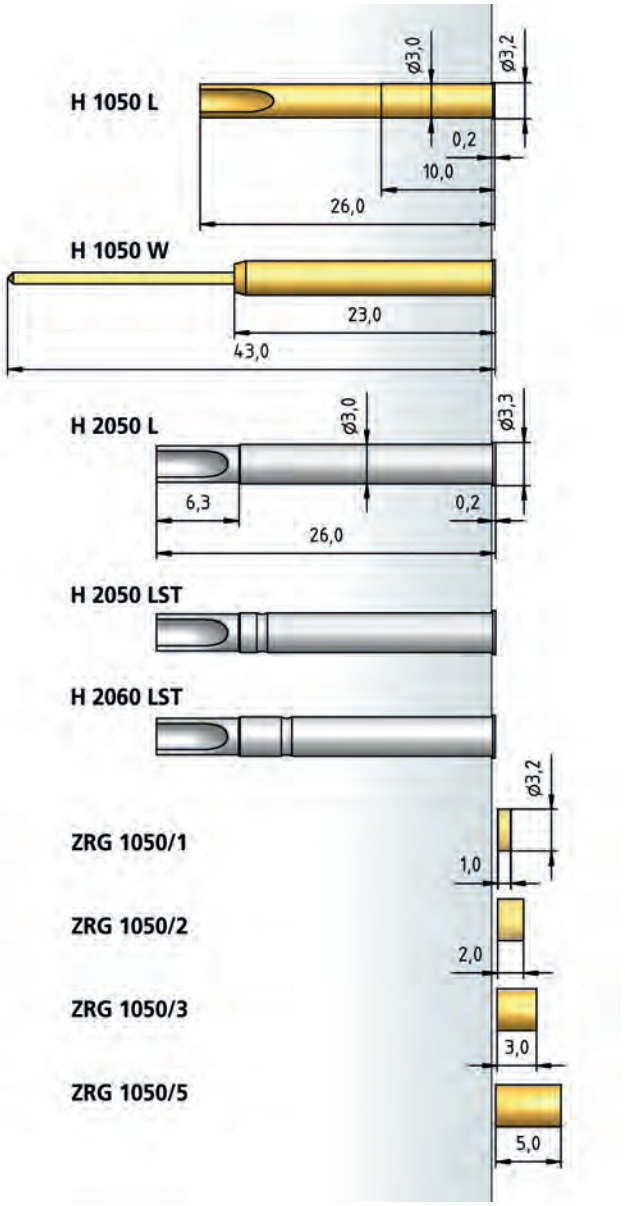


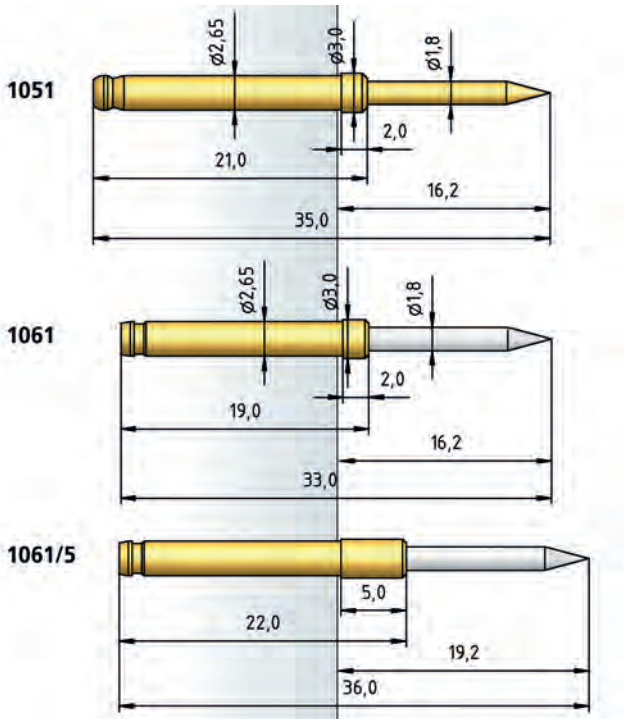


## HOW TO ORDER

| 1051 | - | B | - | 1.5 N | - | Ni | - | 1.8 |
|---|---|---|---|---|---|---|---|---|
| 1 | | 2 | | 3 | | 4 | | 5 |

1 Series 2 Tip Style 3 Spring Force 4 Tip Plating 5 Tip Diameter

L'IMPULSION Retrouvez nous sur www.limpulsion.fr

# Series 1041 • 1041/W

Standard-Test Probe 177 mil / 4.50 mm

| BENEFIT | |
|---|---|
| Stable design | |
| Contacting of assembled PCBs | |
| Universal applications | |
| **MECHANICAL DATA** | |
| Center | 4.50 mm / 177 mil |
| Temperature Range | -30 °C - +120 °C |
| Full Travel | 5.50 mm |
| Working Travel | 4.80 mm |
| Pre-Loaded Spring Force | 0.25/ 0.75/ 0.60 N |
| Spring Force at Working Travel | 1.50/ 3.00/ 5.00 N |
| **ELECTRICAL DATA** | |
| Max. Current Rating | 5.0...8.0 A |
| Typical Continuity Resistance | ≤ 30 mOhm |
| **MATERIALS** | |
| Barrel | Brass, gold-plated |
| Spring | Spring Steel, gold-plated |
| Plunger | Steel |
| Receptacle | Brass, gold-plated |
| **RECOMMENDED DIAMETER OF DRILL** | |
| HP 2361.1 (Trolitax) | 3.50 mm |
| HGW 2372 | 3.52 mm |

**TIP STYLE · DIAMETER · PLATING**



| A | B | BA | C | D |
|---|---|---|---|---|
| 2.50 Ni/Rh<br>4.00 Au | 1.80 Ni/Rh | 1.80 Au/Ni | 2.30 Au/Ni/Rh<br>3.00 Au/Ni<br>4.00 Au/Ni/Rh | 2.30 Au |




| F | F3 | G |
|---|---|---|
| 2.30 Au<br>4.00 Au | 1.00 Rh | 2.30 Rh<br>4.00 Au |

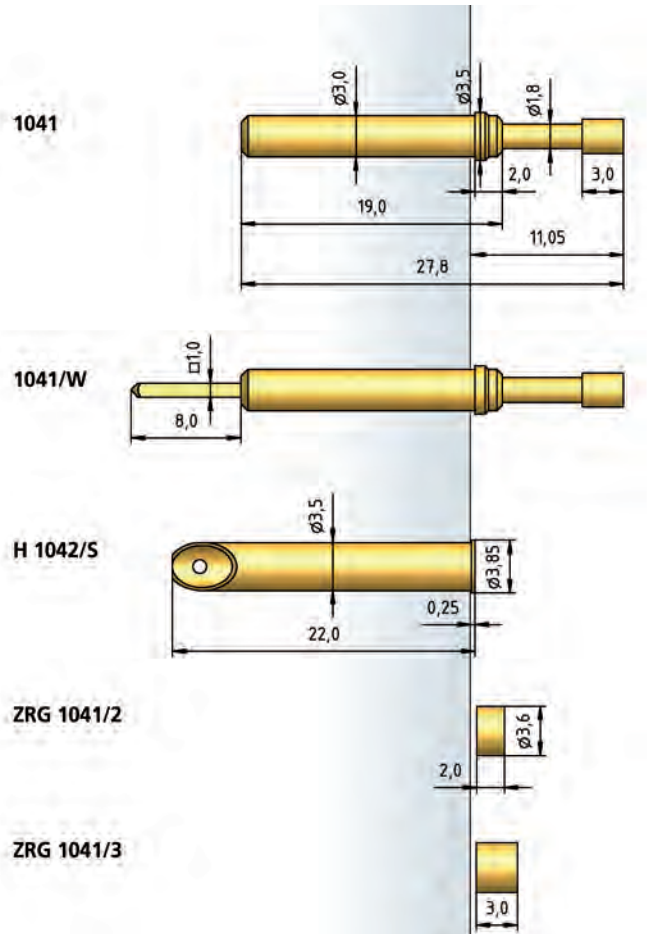


## HOW TO ORDER

| 1041/ | W | - | C | - | 1.5 N | - | Au | - | 4.0/ | MH5.5 |
|---|---|---|---|---|---|---|---|---|---|---|
| 1 | 2 | | 3 | | 4 | | 5 | | 6 | 7 |

1 Series 2 Wire-Wrap Connector 3 Tip Style 4 Spring Force 5 Tip Plating 6 Tip Diameter 7 Full Travel

L'IMPULSION Retrouvez nous sur www.limpulsion.fr

# Standard-Test Probe 177 mil / 4.50 mm

# Series 1042



## TIP STYLE · DIAMETER · PLATING



| C | C | F | G | H |
|---|---|---|---|---|
| 1.85 Ni | 4.00 Au/Ni | 4.00 Ni | 1.85 Ni | 4.00 Rh |

## BENEFIT

| |
|---|
| Stable design |
| Test probe with continuous plunger |
| Contacting of assembled PCBs |
| Universal applications |
| Also for use with higher currents |

## MECHANICAL DATA

| | |
|---|---|
| Center | 4.50 mm / 177 mil |
| Temperature Range | -30 °C - +120 °C |
| Full Travel | 7.00 mm |
| Working Travel | 5.60 mm |
| Pre-Loaded Spring Force | 0.40/ 0.50/ 0.60/ 1.00/ 3.50/ 3.00 N |
| Spring Force at Working Travel | 1.50/ 2.25/ 3.00/ 4.50/ 6.00/ 12.50 N |

## ELECTRICAL DATA

| | |
|---|---|
| **Connector Receptacle** | |
| Max. Current Rating | 5.0 A |
| Typical Continuity Resistance | ≤ 30 mOhm |
| **Connector Plunger** | |
| Max. Current Rating | 12.0 A |
| Typical Continuity Resistance | ≤ 15 mOhm |

## MATERIALS

| | |
|---|---|
| Barrel | Brass, gold-plated |
| Spring | Spring Steel, gold-plated |
| Plunger | Steel, CuBe, gold-plated |
| Receptacle | Brass, gold-plated |

## RECOMMENDED DIAMETER OF DRILL

| | |
|---|---|
| HP 2361.1 (Trolitax) | 3.50 mm |
| HGW 2372 | 3.52 mm |

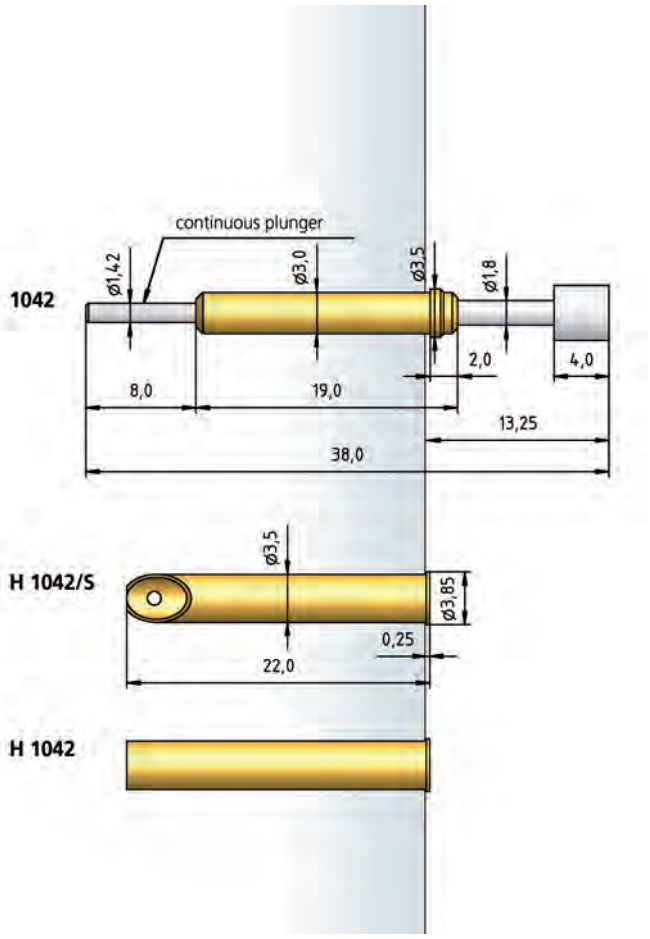


## HOW TO ORDER

| 1042 | - | C | - | 1.5 N | - | Au | - | 4.0 |
|---|---|---|---|---|---|---|---|---|
| 1 | | 2 | | 3 | | 4 | | 5 |

1 Series 2 Tip Style 3 Spring Force 4 Tip Plating 5 Tip Diameter

L'IMPULSION Retrouvez nous sur www.limpulsion.fr

# Series 1055

Standard-Test Probe 177 mil / 4.50 mm

| BENEFIT |
|---|
| Stable design |
| Height-adjustable installation by using receptacle with press ring |
| Contacting of assembled PCBs |
| Universal applications |

| MECHANICAL DATA | |
|---|---|
| Center | 4.50 mm / 177 mil |
| Temperature Range | -30 °C - +120 °C |
| Full Travel | 6.40 mm |
| Working Travel | 5.10 mm |
| Pre-Loaded Spring Force | 0.60/ 1.00 N |
| Spring Force at Working Travel | 2.25/ 4.75 N |

| ELECTRICAL DATA | |
|---|---|
| Max. Current Rating | 8.0 A |
| Typical Continuity Resistance | ≤ 20 mOhm |

| MATERIALS | |
|---|---|
| Barrel | Bronze, gold-plated |
| Spring | Spring Steel, gold-plated |
| Plunger | Steel, CuBe, gold or rhodium plated |
| Receptacle | Bronze, gold-plated |

| RECOMMENDED DIAMETER OF DRILL | |
|---|---|
| HP 2361.1 (Trolitax) | 3.54 mm |
| HGW 2372 | 3.60 mm |

## TIP STYLE · DIAMETER · PLATING



| A | B | C | D2 | G2 |
|---|---|---|---|---|
| 2.36 Rh | 2.03 Rh | 3.96 Rh | 2.03C Au | 1.30 Rh |

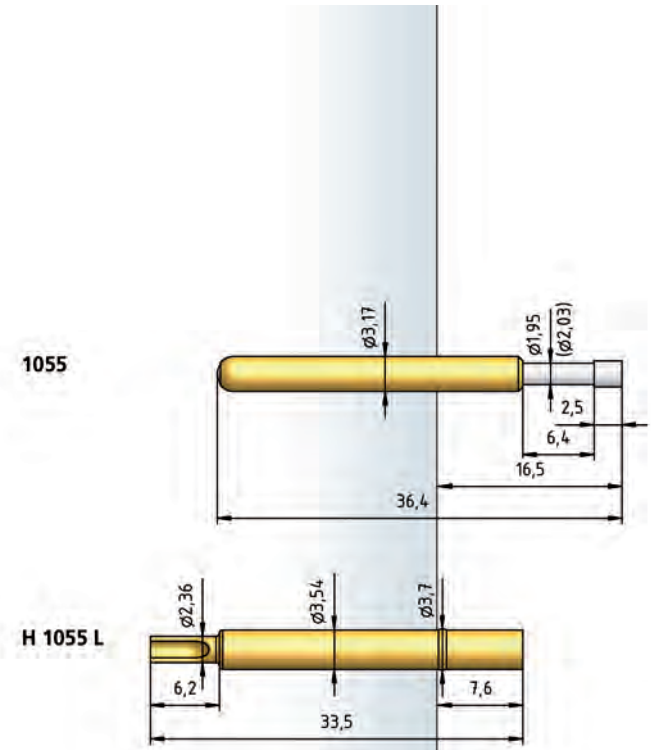


## HOW TO ORDER

| 1055 | - | D2 | - | 2.25 N | - | Au | - | 2.03 | C |
|---|---|---|---|---|---|---|---|---|---|
| 1 | | 2 | | 3 | | 4 | | 5 | 6 |

1 Series 2 Tip Style 3 Spring Force 4 Tip Plating 5 Tip Diameter
6 Tip Material (only for CuBe)

L'IMPULSION
Retrouvez nous sur
www.limpulsion.fr

# ICT-TEST PROBES (E-SERIES)

**The range of ICT Test Probes comprises all standard series of products which have established themselves on the market as international standards.**

These are test probes for centers from 50 mil to 100 mil with a large selection of different tip styles and contact pressures for almost all test requirements. In addition, test probe units with a longer test probe travel are available for 2-level adaptations. Receptacles with a press ring can be supplied for this series. This press ring can be used as a stop to achieve a constant extension height in the adapter, but it also allows variable heights if the press ring is pressed into a defined setting in the take-up drill hole.

The ICT receptacles are available for various types of connections. In addition to these standards, PTR HARTMANN also offers metric types for the ICT/FT. In this case, the receptacles are normally pressed into the take-up drill hole as far as the stop. Here, too, test probe barrels with different collar heights allow variable extension heights in the adapter.



### Component Check in the In-Circuit Test

In-circuit tests are used to recognize faulty installed components as soon as possible. Using defined test points, and on installed PCBs, the electrical data, the correct position and the direction of installation of the individual components are tested. In this way, and in conjunction with a function test, faulty components can be quickly recognized and additional costs avoided on the customer's premises.

L'IMPULSION
Retrouvez nous sur
www.limpulsion.fr

| SERIES | CENTER | PAGE |
|---|---|---|
| 1004/E | 40 mil / 1.00 mm | 64 |
| 1008/E | 50 mil / 1.27 mm | 65 |
| 1008/E.50 | 50 mil / 1.27 mm | 66 |
| 1012/E | 75 mil / 1.91 mm | 67 |
| 1013/Z | 75 mil / 1.91 mm | 68 |
| 1025/E | 100 mil / 2.54 mm | 69 |
| 1034/E | 100 mil / 2.54 mm | 70 |
| 1036/E | 100 mil / 2.54 mm | 71 |
| 2021 · 1021 | 100 mil / 2.54 mm | 72 |
| 2024 · 1024 | 100 mil / 2.54 mm | 73 |
| 2028 · 1028 | 100 mil / 2.54 mm | 74 |
| 2029 | 100 mil / 2.54 mm | 75 |
| Receptacles 1012 | | 76 |
| Receptacles 1025 | | 77 |






L'IMPULSION Retrouvez nous sur www.limpulsion.fr

# Series 1004/E

ICT-Test Probe 40 mil / 1.00 mm

| BENEFIT | |
|---|---|
| International standard for 40 mil applications | |
| Contacting of assembled PCBs | |
| **MECHANICAL DATA** | |
| Center | 1.00 mm / 40 mil |
| Temperature Range | -30 °C - +120 °C |
| Full Travel | 6.40 mm |
| Working Travel | 4.30 mm |
| Pre-Loaded Spring Force | 0.20 N |
| Spring Force at Working Travel | 0.80 N |
| **ELECTRICAL DATA** | |
| Max. Current Rating | 2.0 A |
| Typical Continuity Resistance | ≤ 20 mOhm |
| **MATERIALS** | |
| Barrel | Bronze, gold-plated |
| Spring | Steel, gold-plated |
| Plunger | Steel, CuBe, gold-plated |
| Receptacle | Bronze, gold-plated |
| Wire AWG 30 (Blue) | Copper, silver-plated, insulated |
| **RECOMMENDED DIAMETER OF DRILL** | |
| HP 2361.1 (Trolitax) | 0.75 mm |
| HGW 2372 | 0.76 mm |

**TIP STYLE · DIAMETER · PLATING**




| D | G | LG | V | V4 |
|---|---|---|---|---|
| 0.40C Au | 0.40C Au | 0.32 Au | 0.40 Au | 0.40 Au |




| VL2 |
|---|
| 0.40 Au |

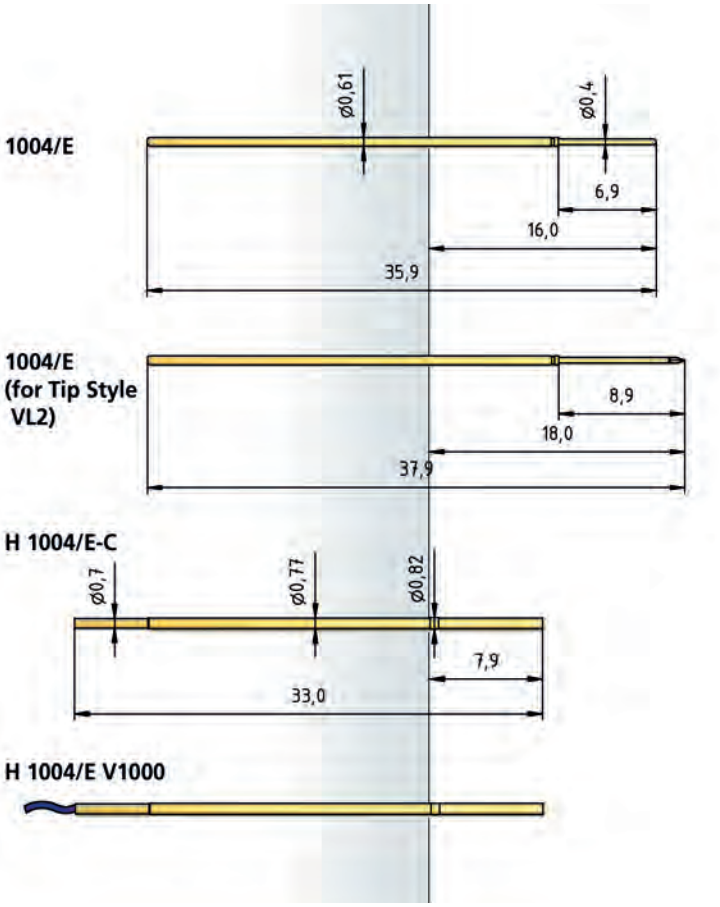


## HOW TO ORDER

| 1004/E | - | G | - | 0.8 N | - | Au | - | 0.4 | C |
|---|---|---|---|---|---|---|---|---|---|
| 1 | | 2 | | 3 | | 4 | | 5 | 6 |

1 Series 2 Tip Style 3 Spring Force 4 Tip Plating 5 Tip Diameter
6 Tip Material (only for CuBe)

L'IMPULSION
Retrouvez nous sur
www.limpulsion.fr

ICT-Test Probe 50 mil / 1.27 mm

# Series 1008/E

## TIP STYLE · DIAMETER · PLATING

| | | | | |
|---|---|---|---|---|
|  |  |  |  |  |
| **A** | **A** | **B** | **BST2** | **C** |
| 0.50C Au | 0.90 Au | 0.50 Au | 0.50 Au | 0.90C Au |
|  |  |  |  |  |
| **D** | **F** | **H** | **H1** | **LG** |
| 0.50C Au | 0.60C Au | 0.50 Au<br>0.90C Au | 0.50 Au | 0.40 Au |
|  |  |  |  |  |
| **Q** | **V** | **V1** | **V4** | **VL2** |
| 0.50 Au | 0.50 Au | 0.50 Au | 0.50 Au | 0.50 Au |

| **BENEFIT** | |
|---|---|
| International standard for 50 mil applications | |
| Contacting of assembled PCBs | |
| **MECHANICAL DATA** | |
| Center | 1.27 mm / 50 mil |
| Temperature Range | -30 °C - +120 °C |
| Full Travel | 6.40 mm |
| Working Travel | 4.30 mm |
| Pre-Loaded Spring Force | 0.30/ 0.40/ 0.50/ 0.60 N |
| Spring Force at Working Travel | 1.00/ 1.50/ 2.00/ 2.80 N |
| **ELECTRICAL DATA** | |
| Max. Current Rating | 2.0...3.0 A |
| Typical Continuity Resistance | ≤ 20 mOhm |
| **MATERIALS** | |
| Barrel | Bronze, gold-plated |
| Spring | Spring Steel, gold-plated |
| Plunger | Steel, CuBe |
| Receptacle | Bronze, gold-plated |
| Wire AWG 30 (Blue) | Copper, silver-plated, insulated |
| **RECOMMENDED DIAMETER OF DRILL** | |
| HP 2361.1 (Trolitax) | 0.96...0.98 mm |
| with pressed-in Ring | 1.02 mm |
| HGW 2372 (Glass filled Material) | 0.97...0.99 mm |
| with pressed-in Ring | 1.03 mm |



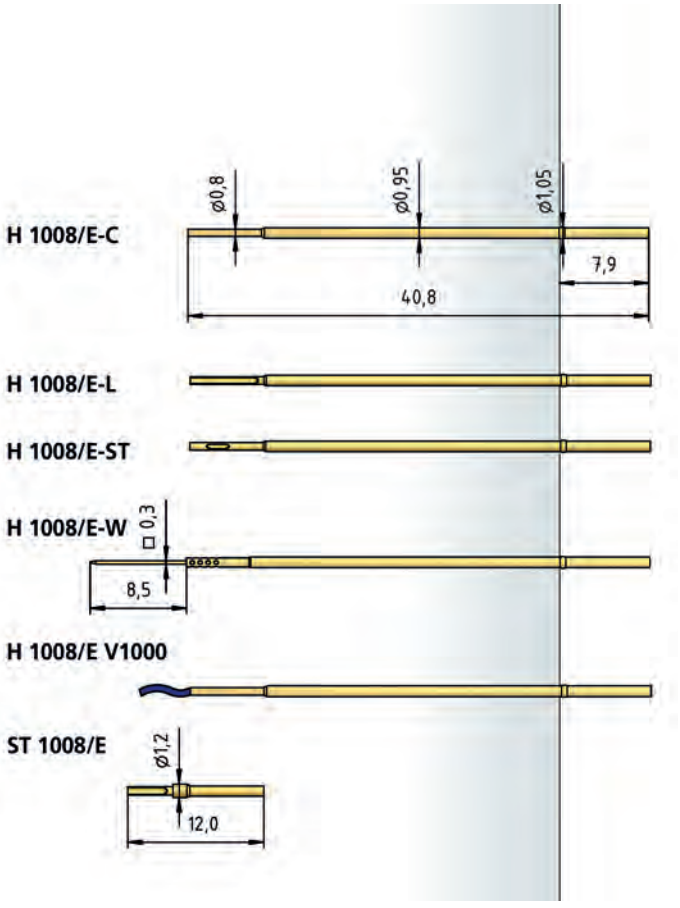


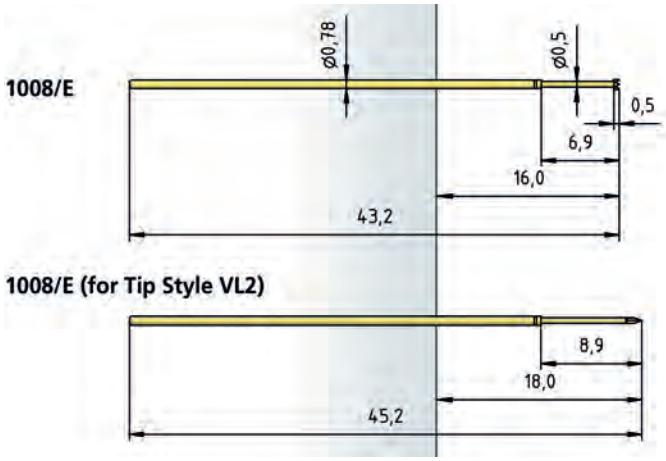


## HOW TO ORDER

| 1008/E | - | C | - | 1.5 N | - | Au | - | 0.9 | C |
|---|---|---|---|---|---|---|---|---|---|
| 1 | | 2 | | 3 | | 4 | | 5 | 6 |

1 Series 2 Tip Style 3 Spring Force 4 Tip Plating 5 Tip Diameter
6 Tip Material (only for CuBe)

L'IMPULSION Retrouvez nous sur www.limpulsion.fr

# Series 1008/E.50

ICT-Test Probe 50 mil / 1.27 mm - Long Travel

| BENEFIT | |
|---|---|
| International standard for 50 mil applications | |
| Contacting of assembled PCBs | |
| Spring travel 10 mm | |
| **MECHANICAL DATA** | |
| Center | 1.27 mm / 50 mil |
| Temperature Range | -30 °C - +120 °C |
| Full Travel | 10.00 mm |
| Working Travel | 8.00 mm |
| Pre-Loaded Spring Force | 0.25/ 0.30 N |
| Spring Force at Working Travel | 1.00/ 1.50 N |
| **ELECTRICAL DATA** | |
| Max. Current Rating | 2.0...3.0 A |
| Typical Continuity Resistance | ≤ 20 mOhm |
| **MATERIALS** | |
| Barrel | Bronze, gold-plated |
| Spring | Spring Steel, gold-plated |
| Plunger | Steel, gold-plated |
| Receptacle | Bronze, gold-plated |
| Wire AWG 30 (Blue) | Copper, silver-plated, insulated |
| **RECOMMENDED DIAMETER OF DRILL** | |
| HP 2361.1 (Trolitax) | 0.96...0.98 mm |
| with pressed-in Ring | 1.02 mm |
| HGW 2372 (Glass filled Material) | 0.97...0.99 mm |
| with pressed-in Ring | 1.03 mm |

**TIP STYLE · DIAMETER · PLATING**



| H | Q | V |
|---|---|---|
| 0.50 Au | 0.50 Au | 0.50 Au |

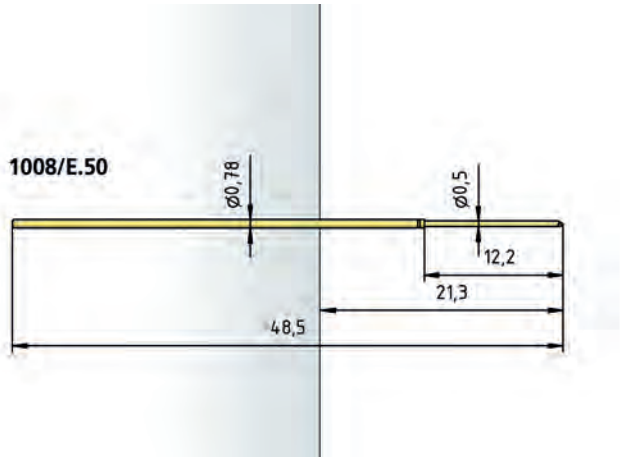


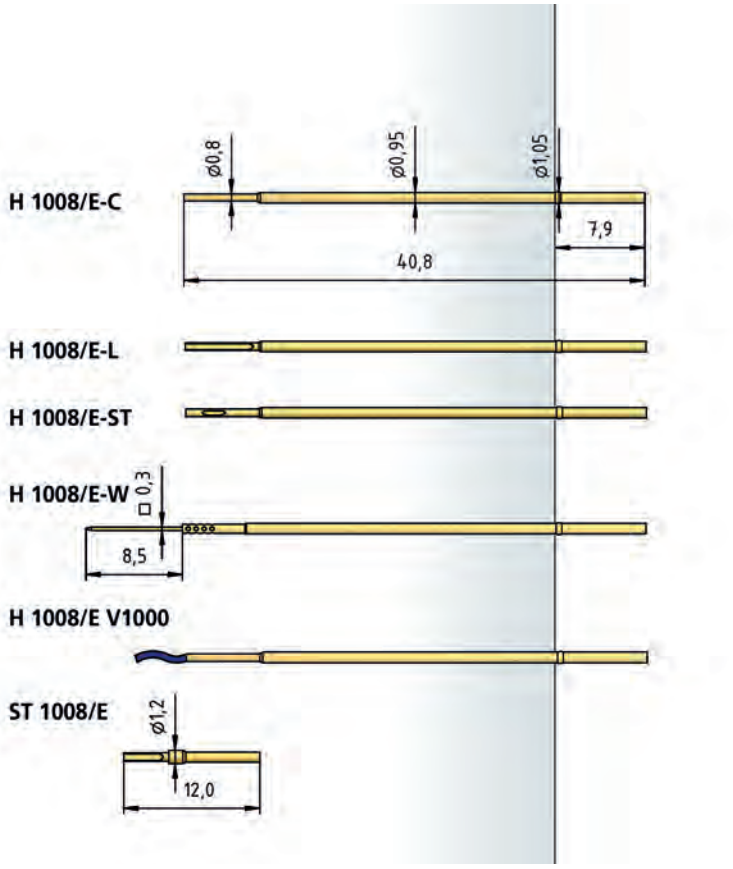


## HOW TO ORDER

| 1008/E | .50 | - | H | - | 1.5 N | - | Au | - | 0.5 |
|---|---|---|---|---|---|---|---|---|---|
| 1 | 2 | | 3 | | 4 | | 5 | | 6 |

1 Series 2 Variant 3 Tip Style 4 Spring Force 5 Tip Plating 6 Tip Diameter

L'IMPULSION
Retrouvez nous sur
www.limpulsion.fr

ICT-Test Probe 75 mil / 1.91 mm

# Series 1012/E

## TIP STYLE · DIAMETER · PLATING

| | | | | |
|---|---|---|---|---|
|  |  |  |  |  |
| **A** | **A6** | **B** | **BD** | **BST1** |
| 1.20C Au | 1.20 Au | 0.64 Au | 0.61C Au | 0.64 Au |
|  |  | 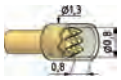 |  |  |
| **BST2** | **C** | **CS1** | **D** | **D** |
| 0.64 Au | 1.00 Au<br>1.20 Au | 0.80/1.30C Au/POM | 0.50C Au | 0.64C Au |
| 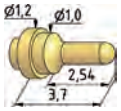 |  |  |  |  |
| **D3** | **F** | **G** | **H** | **H** |
| 0.50C Au | 0.90C Au | 1.15 Au | 0.64 Au | 1.00 Au<br>1.20 Au |
|  |  |  |  |  |
| **H1** | **K** | **M1** | **M6** | **N** |
| 0.64 Au | 1.20 Au | 1.20 Au | 1.30 Au | 0.50 Au |
|  |  |  |  |  |
| **Q** | **Q** | **Q** | **Q6F** | **Q8** |
| 0.50 Au | 0.64 Au | 0.80 Au<br>1.00 Au<br>1.15 Au | 0.64C Au | 1.20 Au |
|  |  |  |  |  |
| **V** | **V1** | **V1** | **V5** | **VL2** |
| 0.64 Au | 0.64 Au | 0.80 Au | 0.64 Au | 0.64 Au |

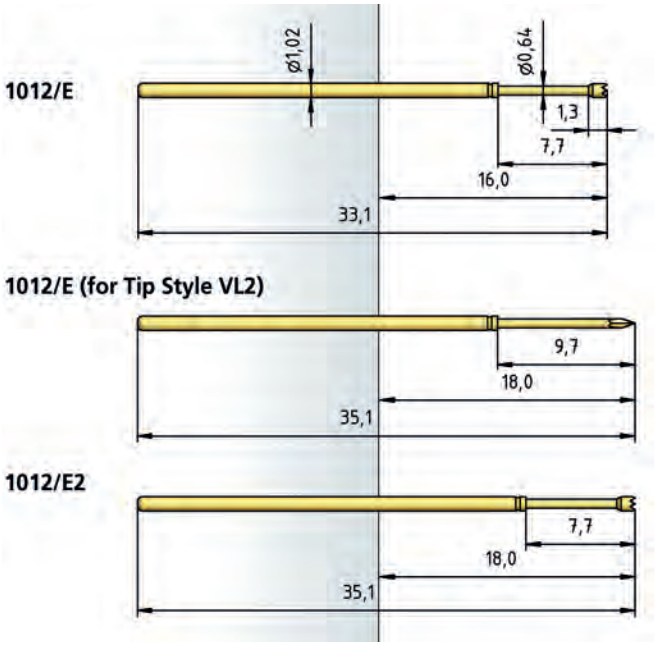


| BENEFIT | |
|---|---|
| International standard for 75 mil applications | |
| Contacting of assembled PCBs | |
| Large selection of head styles | |
| **MECHANICAL DATA** | |
| Center | 1.91 mm / 75 mil |
| Temperature Range | -30 °C - +120 °C |
| Full Travel | 6.40 mm |
| Working Travel | 4.30 mm |
| Pre-Loaded Spring Force | 0.30/ 0.40/ 0.50/ 0.70 N |
| Spring Force at Working Travel | 1.00/ 1.50/ 2.00/ 2.80 N |
| **ELECTRICAL DATA** | |
| Max. Current Rating | 3.0...4.0 A |
| Typical Continuity Resistance | ≤ 20 mOhm |
| **MATERIALS** | |
| Barrel | Bronze, gold-plated |
| Spring | Spring Steel, gold-plated |
| Plunger | Steel, CuBe |
| Receptacle | Bronze, gold-plated |
| **RECOMMENDED DIAMETER OF DRILL** | |
| HP 2361.1 (Trolitax) | 1.30 mm |
| with pressed-in Ring | 1.36 mm |
| HGW 2372( | 1.32 mm |
| with pressed-in Ring | 1.37 mm |

**Receptacles see page 76**

## HOW TO ORDER

| 1012/E | - | C | - | 1.5 N | - | Au | - | 1.0 | C |
|---|---|---|---|---|---|---|---|---|---|
| 1 | | 2 | | 3 | | 4 | | 5 | 6 |

1 Series 2 Tip Style 3 Spring Force 4 Tip Plating 5 Tip Diameter
6 Tip Material (only for CuBe)



L'IMPULSION Retrouvez nous sur www.limpulsion.fr

# Series 1013/Z

ICT-Test Probe 75 mil / 1.91 mm - Long Travel

| BENEFIT | |
|---|---|
| International standard for 75 mil applications | |
| Contacting of assembled PCBs | |
| Spring travel 12.0 mm | |
| **MECHANICAL DATA** | |
| Center | 1.91 mm / 75 mil |
| Temperature Range | -30 °C - +120 °C |
| Full Travel | 12.00 mm |
| Working Travel | 9.60 mm |
| Pre-Loaded Spring Force | 0.40/ 0.35 N |
| Spring Force at Working Travel | 1.20/ 1.60 N |
| **ELECTRICAL DATA** | |
| Max. Current Rating | 3.0 A |
| Typical Continuity Resistance | ≤ 30 mOhm |
| **MATERIALS** | |
| Barrel | Bronze, gold-plated |
| Spring | Spring Steel, gold-plated |
| Plunger | Steel |
| Receptacle | Bronze, gold-plated |
| **RECOMMENDED DIAMETER OF DRILL** | |
| HP 2361.1 (Trolitax) | 1.30 mm |
| with pressed-in Ring | 1.36 mm |
| HGW 2372 (Glass filled Material) | 1.32 mm |
| with pressed-in Ring | 1.37 mm |

**TIP STYLE · DIAMETER · PLATING**



| C | H | Q | Q | V |
|---|---|---|---|---|
| 1.15 Au | 1.15 Au | 0.64 Au | 1.15 Au | 0.64 Au |

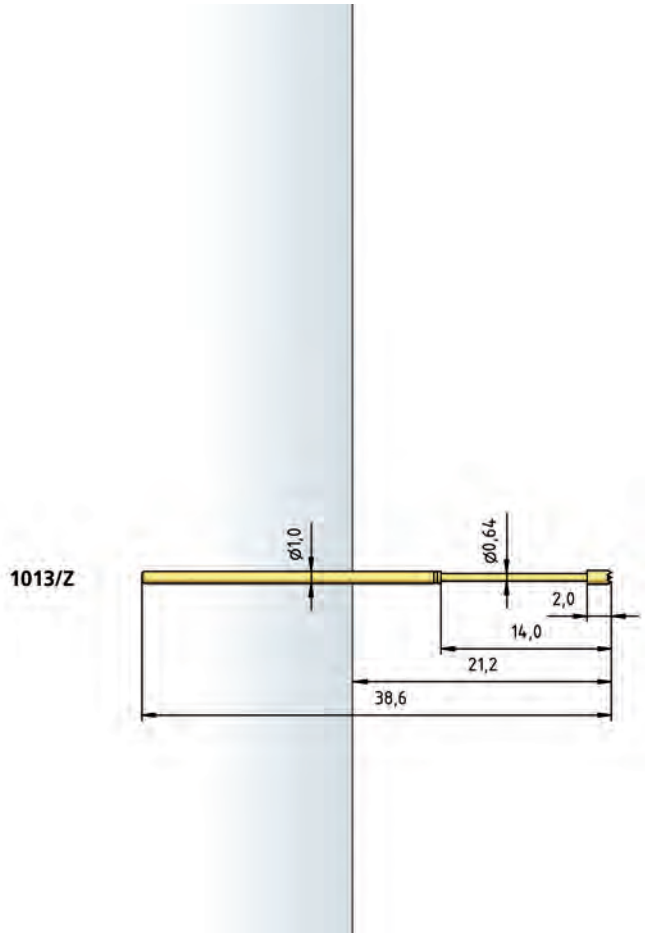


**Receptacles see page 76**

## HOW TO ORDER

| 1013/Z | - | C | - | 1.6 N | - | Au | - | 1.15 |
|---|---|---|---|---|---|---|---|---|
| 1 | | 2 | | 3 | | 4 | | 5 |

1 Series 2 Tip Style 3 Spring Force 4 Tip Plating 5 Tip Diameter

L'IMPULSION Retrouvez nous sur www.limpulsion.fr

ICT-Test Probe 100 mil / 2.54 mm

# Series 1025/E



## TIP STYLE · DIAMETER · PLATING



| A | A6 | B | BD | BST1 |
|---|---|---|---|---|
| 1.50C Au<br>2.00C Au | 1.50 Au<br>1.80C Au | 0.90 Au | 0.90 Au | 0.62 Au/Ni |




| BST2 | BST3 | C | C1 | CS1 |
|---|---|---|---|---|
| 0.90 Au | 1.60C Au | 1.30 Au<br>1.50C Au<br>2.00C Au<br>2.50C Au<br>3.00C Au | 2.30/3.10C Au | 1.80/2.25C Au/HTK |




| CS3 | CS8 | D1 | D | D |
|---|---|---|---|---|
| 1.75/2.40C Au/HTK | 1.80/2.80C Au/HTK | 0.50 Au<br>0.64C Au | 0.90C Au | 1.30 Au<br>1.50 Au |



| E | F | F | G | H |
|---|---|---|---|---|
| 1.50 Au | 0.90 Au | 1.50C Au | 1.06 Au<br>1.30 Au<br>1.50 Au | 0.90 Au |



| H | H1 | HL2 | K | M |
|---|---|---|---|---|
| 1.50 Au<br>1.70 Au<br>2.50 Au | 0.90 Au | 0.90C Au | 1.70 Au | 1.30 Au |

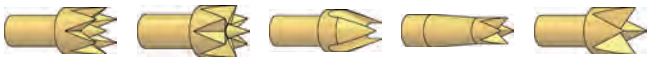

| M1 | M6 | N | Q | Q |
|---|---|---|---|---|
| 1.30 Au<br>1.40 Au<br>1.50 Au | 1.30 Au<br>1.50 Au | 0.50 Au | 0.50 Au<br>0.80 Au | 1.06 Au<br>1.30 Au<br>1.50 Au |



| Q5 | Q6F | Q8 | Q8F | QL2 |
|---|---|---|---|---|
| 1.06 Au | 0.64C Au | 1.50 Au | 0.90C Au | 1.50 Au |




| V | V | V1 | VL2 | V3 |
|---|---|---|---|---|
| 0.90 Au/Ni | 1.30 Au | 0.90 Au | 0.90 Au | 0.90 Au |




| V5 |
|---|
| 0.90 Au |

## BENEFIT

| |
|---|
| International standard for 100 mil applications |
| Contacting of assembled PCBs |
| Large selection of head styles |

## MECHANICAL DATA

| | |
|---|---|
| Center | 2.54 mm / 100 mil |
| Temperature Range | -30 °C - +120 °C |
| Full Travel | 6.40 mm |
| Working Travel | 4.30 mm |
| Pre-Loaded Spring Force | 0.20/ 0.25/ 0.40/ 0.60/ 0.50/ 0.80/ 1.40 N |
| Spring Force at Working Travel | 0.60/ 1.00/ 1.50/ 2.00/ 2.25/ 3.00/ 4.00 N |

## ELECTRICAL DATA

| | |
|---|---|
| Max. Current Rating | 5.0...8.0 A |
| Typical Continuity Resistance | ≤ 20 mOhm |

## MATERIALS

| | |
|---|---|
| Barrel | Bronze, gold-plated |
| Spring | Spring Steel, gold-plated |
| Plunger | Steel, CuBe |
| Receptacle | Bronze, gold-plated |

## RECOMMENDED DIAMETER OF DRILL

| | |
|---|---|
| HP 2361.1 (Trolitax) | 1.65 mm |
| with pressed-in Ring | 1.75 mm |
| HGW 2372 (Glass filled Material) | 1.67 mm |
| with pressed-in Ring | 1.76 mm |

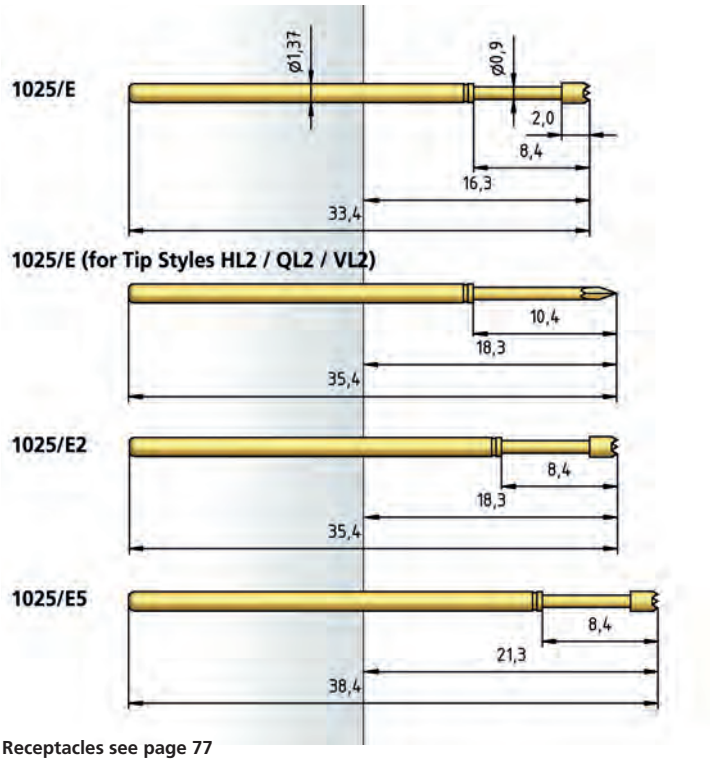


**Receptacles see page 77**

## HOW TO ORDER

| 1025/E | - | C | - | 1.5 N | - | Au | - | 1.5 | C |
|---|---|---|---|---|---|---|---|---|---|
| 1 | | 2 | | 3 | | 4 | | 5 | 6 |

1 Series 2 Tip Style 3 Spring Force 4 Tip Plating 5 Tip Diameter
6 Tip Material (only for CuBe)

L'IMPULSION | Retrouvez nous sur www.limpulsion.fr

# Series 1034/E

## ICT-Test Probe 100 mil / 2.54 mm - Long Travel

| BENEFIT | |
|---|---|
| International standard for 100 mil applications | |
| Contacting of assembled PCBs | |
| Large selection of head styles | |
| Spring travel 10 mm | |
| **MECHANICAL DATA** | |
| Center | 2.54 mm / 100 mil |
| Temperature Range | -30 °C - +120 °C |
| Full Travel | 10.00 mm |
| Working Travel | 8.00 mm |
| Pre-Loaded Spring Force | 0.40/ 0.40/ 0.50 N |
| Spring Force at Working Travel | 1.50/ 2.25/ 3.00 N |
| **ELECTRICAL DATA** | |
| Max. Current Rating | 5.0...8.0 A |
| Typical Continuity Resistance | ≤ 30 mOhm |
| **MATERIALS** | |
| Barrel | Bronze, gold-plated |
| Spring | Spring Steel, gold-plated |
| Plunger | Steel, CuBe, gold-plated |
| Receptacle | Bronze, gold-plated |

**TIP STYLE · DIAMETER · PLATING**

| A | B | BSTL2 | C | G |
|---|---|---|---|---|
| 1.30 Au | 0.90 Au | 0.50 Au | 1.30 Au<br>1.50 Au | 1.30 Au<br>1.50 Au |

| H | K | M1 | Q | Q |
|---|---|---|---|---|
| 1.50 Au<br>2.50 Au | 1.70 Au | 1.30 Au | 0.50 Au<br>1.00 Au | 1.30 Au<br>1.50 Au |

| V | V1 |
|---|---|
| 0.90 Au | 0.90 Au |

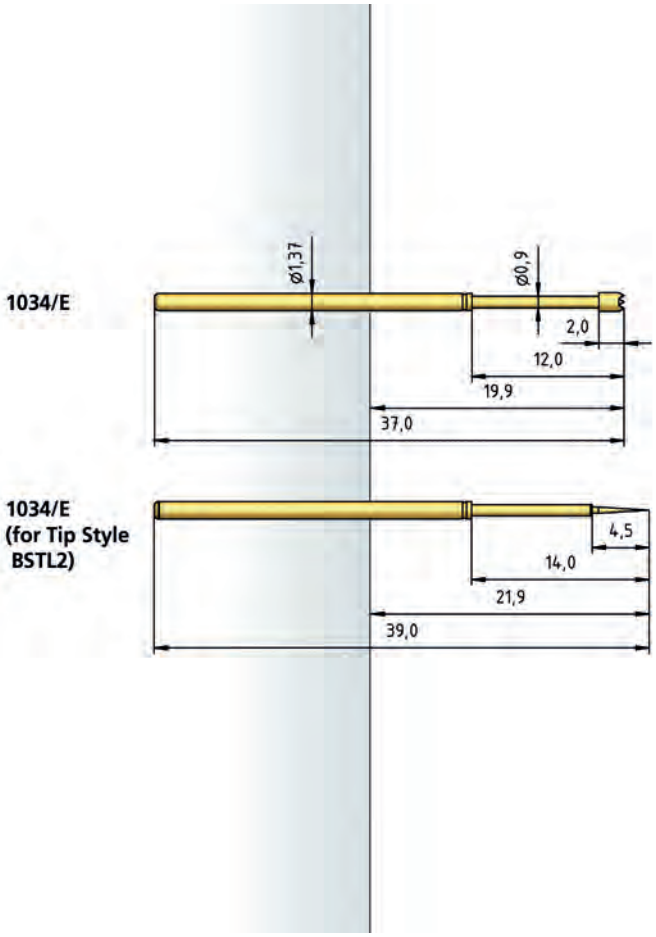


**Receptacles see page 77**

## HOW TO ORDER

| 1034/E | - | C | - | 1.5 N | - | Au | - | 1.5 |
|---|---|---|---|---|---|---|---|---|
| 1 | | 2 | | 3 | | 4 | | 5 |

1 Series 2 Tip Style 3 Spring Force 4 Tip Plating 5 Tip Diameter

L'IMPULSION
Retrouvez nous sur
www.limpulsion.fr

ICT-Test Probe 100 mil / 2.54 mm - Long Travel

# Series 1036/E

## TIP STYLE · DIAMETER · PLATING



| A | B | C | D | F |
|---|---|---|---|---|
| 1.30 Au | 0.90 Au | 1.30 Au<br>1.50 Au | 0.90 Au | 0.90 Au |



| G | H | K | M1 | Q |
|---|---|---|---|---|
| 1.50 Au | 1.50 Au | 1.50 Au | 1.30 Au | 0.50 Au |




| Q | V | V1 |
|---|---|---|
| 1.30 Au<br>1.50 Au | 0.90 Au | 0.90 Au |

| BENEFIT | |
|---|---|
| International standard for 100 mil applications | |
| Contacting of assembled PCBs | |
| Large selection of head styles | |
| Spring travel 11.70 mm | |
| **MECHANICAL DATA** | |
| Center | 2.54 mm / 100 mil |
| Temperature Range | -30 °C - +120 °C |
| Full Travel | 11.70 mm |
| Working Travel | 9.30 mm |
| Pre-Loaded Spring Force | 0.30/ 0.40/ 0.50 N |
| Spring Force at Working Travel | 1.50/ 2.00/ 3.00 N |
| **ELECTRICAL DATA** | |
| Max. Current Rating | 3.0 A |
| Typical Continuity Resistance | ≤ 25 mOhm |
| **MATERIALS** | |
| Barrel | Nickel Silver, gold-plated |
| Spring | Spring Steel, gold-plated |
| Plunger | Steel |
| Receptacle | Bronze, gold-plated |
| **RECOMMENDED DIAMETER OF DRILL** | |
| HP 2361.1 (Trolitax) | 1.65 mm |
| with pressed-in Ring | 1.75 mm |
| HGW 2372 (Glass filled Material) | 1.67 mm |
| with pressed-in Ring | 1.76 mm |

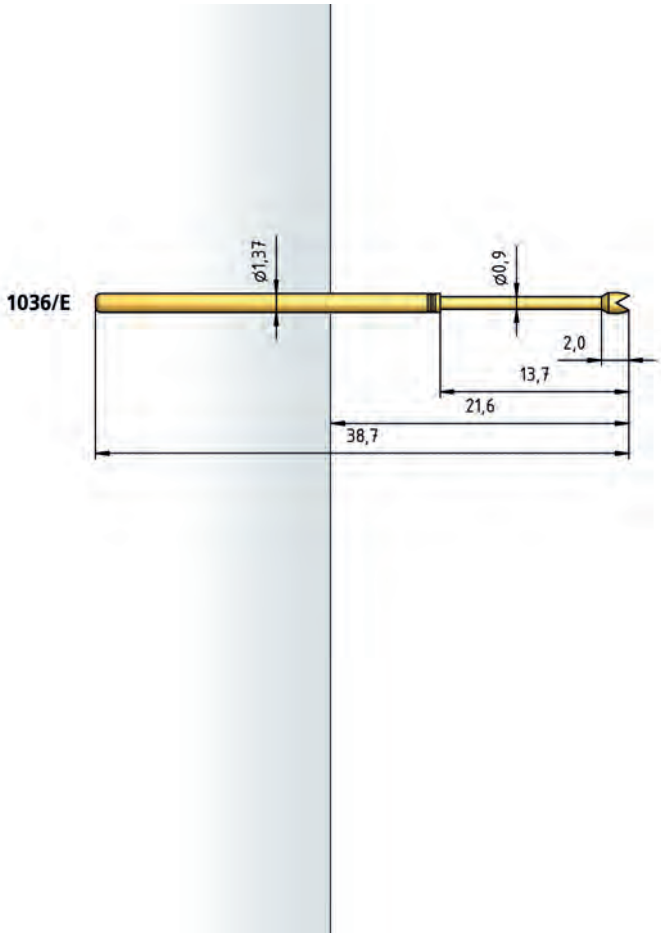


**Receptacles see page 77**

## HOW TO ORDER

| 1036/E | - | B | - | 2.0 N | - | Au | - | 0.9 |
|---|---|---|---|---|---|---|---|---|
| 1 | | 2 | | 3 | | 4 | | 5 |

1 Series 2 Tip Style 3 Spring Force 4 Tip Plating 5 Tip Diameter

L'IMPULSION Retrouvez nous sur www.limpulsion.fr

# Series 2021 • 1021

ICT-Test Probe 100 mil / 2.54 mm

| BENEFIT | |
|---|---|
| Metric design | |
| Contacting of assembled PCBs | |
| Large selection of head styles | |
| Variable installation heights from various collar dimensions | |
| **MECHANICAL DATA** | |
| Center | 2.54 mm / 100 mil |
| Temperature Range | -30 °C - +120 °C |
| Full Travel | 5.30 mm |
| Working Travel | 4.00 mm |
| Pre-Loaded Spring Force | 0.30/ 0.40/ 0.50/ 0.70/ 1.00/ 1.00 N |
| Spring Force at Working Travel | 0.70/ 1.00/ 1.50/ 2.25/ 3.00/ 5.00 N |
| | *2021/5 - 1.00 N not available* |
| **ELECTRICAL DATA** | |
| Max. Current Rating | 5.0...8.0 A |
| Typical Continuity Resistance | ≤ 25 mOhm |
| **MATERIALS** | |
| Barrel | Bronze/Brass, gold-plated |
| Spring | Spring Steel, Stainless Steel, gold-plated |
| Plunger | Steel, Plastic |
| Receptacle | Bronze, gold-plated |
| **RECOMMENDED DIAMETER OF DRILL** | |
| HP 2361.1 (Trolitax) | 1.99 mm |
| HGW 2372 | 2.00 mm |
| **HIGH-TEMPERATURE APPLICATIONS** | |
| Temperature Range | -40 °C - +250 °C |
| Pre-Loaded Spring Force | 0.50/ 0.70/ 1.00/ 1.00 N |
| Spring Force at Working Travel | |
| (Order Index E) | 1.50/ 2.25/ 3.00/ 5.00 N |
| *2021/5 - High-Temperature Applications not available* | |

**TABLE COLLAR HEIGHT FOR TEST PROBE 1021/X**

| Series | X (mm) | Y (mm) | Z (mm) |
|---|---|---|---|
| 1021 | 4.0 | 12.5 | 34.3 |
| 1021 | 6.0 | 14.5 | 36.3 |
| 1021 | 7.0 | 15.5 | 37.3 |
| 1021 | 8.0 | 16.5 | 38.3 |
| 1021 | 9.0 | 17.5 | 39.3 |
| 1021 | 10.0 | 18.5 | 40.3 |

**TIP STYLE · DIAMETER · PLATING**



| A | A6 | B | BST | C |
|---|---|---|---|---|
| 2.00 Au/Ni/Rh | 1.80C Au<br>2.00C Au | 0.65 Ni<br>0.80 Au/ Ni/Rh<br>1.00 Au/Ni | 0.80 Au/Ni | 1.30 Au/Ni/Rh<br>1.50 Au<br>1.80 Au/Ni/Rh<br>2.00 Au/Ni<br>2.30 Rh<br>2.50 Ni<br>3.00 Rh |




| C1S | C5S | D | D | D1 |
|---|---|---|---|---|
| 1.20/2.00 Au/ HTK | 1.40/2.50 Au/ HTK | 0.65 Au/Ni<br>0.80 Au<br>1.00 Au | 1.30 Au/Ni<br>1.40 Au<br>1.80 Ni<br>2.00 Au | 0.65 Au/Ni |




| F | F | F1 | F4 | G |
|---|---|---|---|---|
| 0.80 Au<br>1.00 Au/Ni | 1.50 Au<br>1.80 Au<br>2.00 Au/Ni | 0.65 Ni | 0.80 Au | 1.30 Ni<br>1.80 Au/Rh<br>2.00 Au |



| H | K | M | Q |
|---|---|---|---|
| 1.80 Rh<br>2.00 Rh | 1.15 Ni<br>1.75 Ni<br>2.00 Rh | 1.80 Rh | 1.00 Ni<br>1.30 Au/Ni |

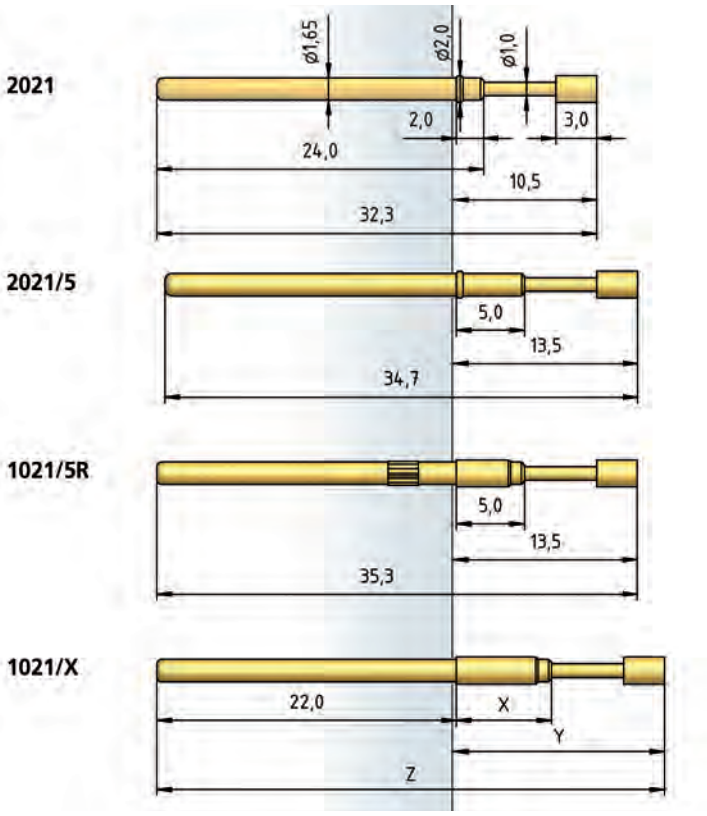


**Receptacles see page 73**

**Distance rings see page 73**

## HOW TO ORDER

| 2021/ | 5 | - | F | - | 1.5 N | E | - | Au | - | 2.0 |
|---|---|---|---|---|---|---|---|---|---|---|
| 1 | 2 | | 3 | | 4 | 5 | | 6 | | 7 |

1 Series 2 Collar Height 3 Tip Style 4 Spring Force 5 High Temperature 6 Tip Plating 7 Tip Diameter

L'IMPULSION Retrouvez nous sur www.limpulsion.fr

ICT-Test Probe 100 mil / 2.54 mm

# Series 2024 • 1024



## TIP STYLE · DIAMETER · PLATING



| A | B | BST | C | D |
|---|---|---|---|---|
| 1.80 Au<br>2.00 Au | 1.00 Ni | 0.80 Au | 1.30 Rh<br>2.00 Ni | 1.00 Ni |



| D | F | G | G | H |
|---|---|---|---|---|
| 1.30 Ni | 2.00 Au | 1.00 Ni | 1.30 Ni<br>2.00 Ni | 1.30 Rh |

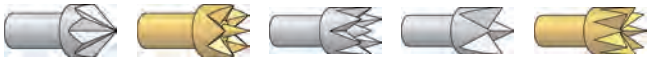

| K | M | M1 | Q | Q8 |
|---|---|---|---|---|
| 2.00 Ni | 1.50 Au | 2.00 Rh | 1.30 Ni | 1.80 Au |




| V | V |
|---|---|
| 1.00 Ni | 1.00 Ni |

## BENEFIT

| |
|---|
| Metric design |
| Contacting of assembled PCBs |
| Large selection of head styles |
| Variable installation heights from various collar dimensions |

## MECHANICAL DATA

| | |
|---|---|
| Center | 2.54 mm / 100 mil |
| Temperature Range | -30 °C - +120 °C |
| Full Travel | 10.00 mm |
| Working Travel | 8.00 mm |
| Pre-Loaded Spring Force | 0.40/ 0.50/ 0.40 N |
| Spring Force at Working Travel | 1.50/ 2.50/ 3.00 N |

## ELECTRICAL DATA

| | |
|---|---|
| Max. Current Rating | 3.0 A |
| Typical Continuity Resistance | ≤ 30 mOhm |

## MATERIALS

| | |
|---|---|
| Barrel | Bronze/Brass, gold-plated |
| Spring | Spring Steel, gold-plated |
| Plunger | Steel |
| Receptacle | Bronze, gold-plated |

## RECOMMENDED DIAMETER OF DRILL

| | |
|---|---|
| HP 2361.1 (Trolitax) | 1.99 mm |
| HGW 2372 | 2.00 mm |

## TABLE COLLAR HEIGHT FOR TEST PROBES 1024/X AND 2024/X

| Series | X (mm) | Y (mm) | Z (mm) |
|---|---|---|---|
| 2024 | 5.0 | 18.2 | 39.5 |
| 1024 | 7.0 | 20.2 | 42.0 |
| 2024 | 8.0 | 21.2 | 42.5 |
| 1024 | 10.0 | 23.2 | 45.0 |

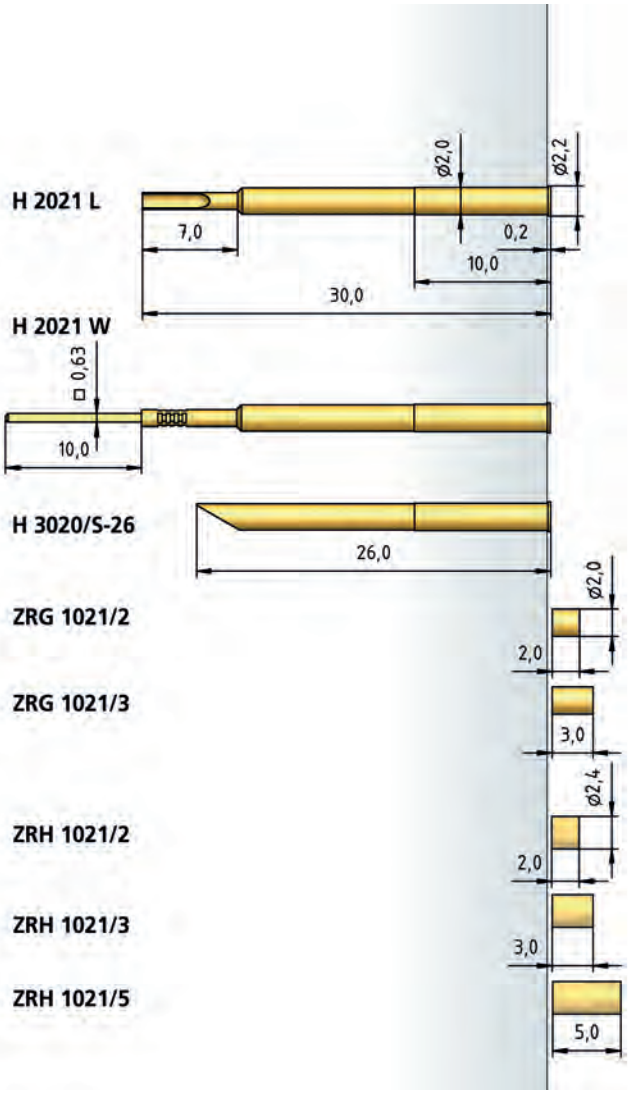


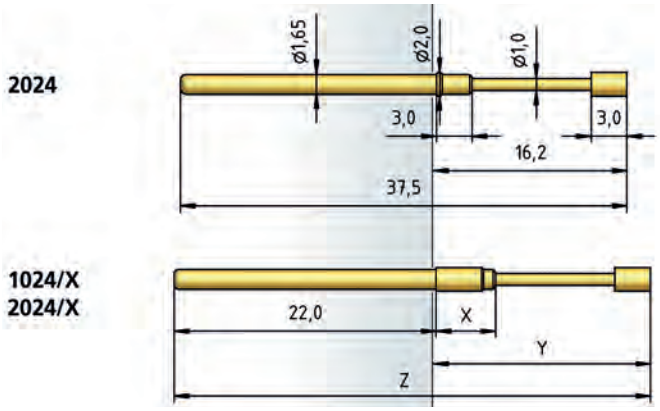


## HOW TO ORDER

| 2024/ | 5 | - | G | - | 1.5 N | - | Ni | - | 1.3 |
|---|---|---|---|---|---|---|---|---|---|
| 1 | 2 | | 3 | | 4 | | 5 | | 6 |

1 Series 2 Collar Height 3 Tip Style 4 Spring Force 5 Tip Plating 6 Tip Diameter

# Series 2028 • 1028

ICT-Test Probe 100 mil / 2.54 mm

| BENEFIT | |
|---|---|
| Metric design | |
| Contacting of assembled PCBs | |
| Large selection of head styles | |
| **MECHANICAL DATA** | |
| Center | 2.54 mm / 100 mil |
| Temperature Range | -30 °C - +120 °C |
| Full Travel | 5.30 mm |
| Working Travel | 4.00 mm |
| Pre-Loaded Spring Force | 0.30/ 0.40/ 0.50/ 0.70/ 1.00/ 1.00 N |
| Spring Force at Working Travel | 0.70/ 1.00/ 1.50/ 2.25/ 3.00/ 5.00 N<br>*2028/5 - 1.00 N not available* |
| **ELECTRICAL DATA** | |
| Max. Current Rating | 3.0 A |
| Typical Continuity Resistance | ≤ 25 mOhm |
| **MATERIALS** | |
| Barrel | Bronze/Brass, gold-plated |
| Spring | Spring Steel, Stainless Steel, gold-plated |
| Plunger | Steel, Plastic |
| Receptacle | Bronze, gold-plated |
| **RECOMMENDED DIAMETER OF DRILL** | |
| HP 2361.1 (Trolitax) | 1.99 mm |
| HGW 2372 | 2.00 mm |
| **HIGH-TEMPERATURE APPLICATIONS** | |
| Temperature Range | -40 °C - +250 °C |
| Pre-Loaded Spring Force | 0.50/ 0.50/ 0.80 N |
| Spring Force at Working Travel (Order Index E) | 1.50/ 2.25/ 3.00 N |

**TIP STYLE · DIAMETER · PLATING**



| A | B | BST | C | CSM |
|---|---|---|---|---|
| 1.50 Au<br>1.80 Ni | 1.30 Rh | 0.80 Au/Ni | 1.40 Au<br>1.80 Rh<br>2.50 Rh<br>3.50 Rh | 1.00/2.00 Au/<br>HTK |



| D | D1 | EB | F | G |
|---|---|---|---|---|
| 1.40 Au<br>2.00 Au | 0.65 Ni<br>0.80 Ni | 1.80 Au | 1.30 Ni | 1.30 Ni<br>1.50 Rh |



| H | H | K | M6 | Q |
|---|---|---|---|---|
| 1.30 Au | 1.40 Au<br>1.80 Au | 1.30 Au<br>1.75 Ni | 2.00 Rh | 1.30 Au |



| Q | Q5 | Q8 | V |
|---|---|---|---|
| 1.80 Au<br>2.00 Au | 1.30 Ni | 2.30 Ni | 1.30 Ni |

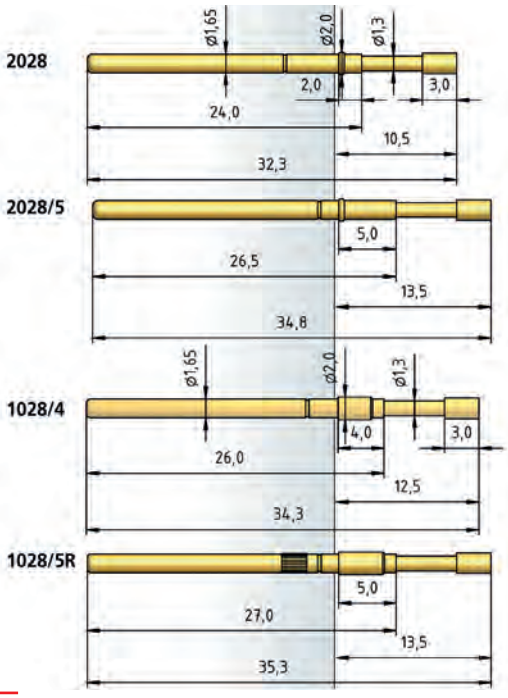


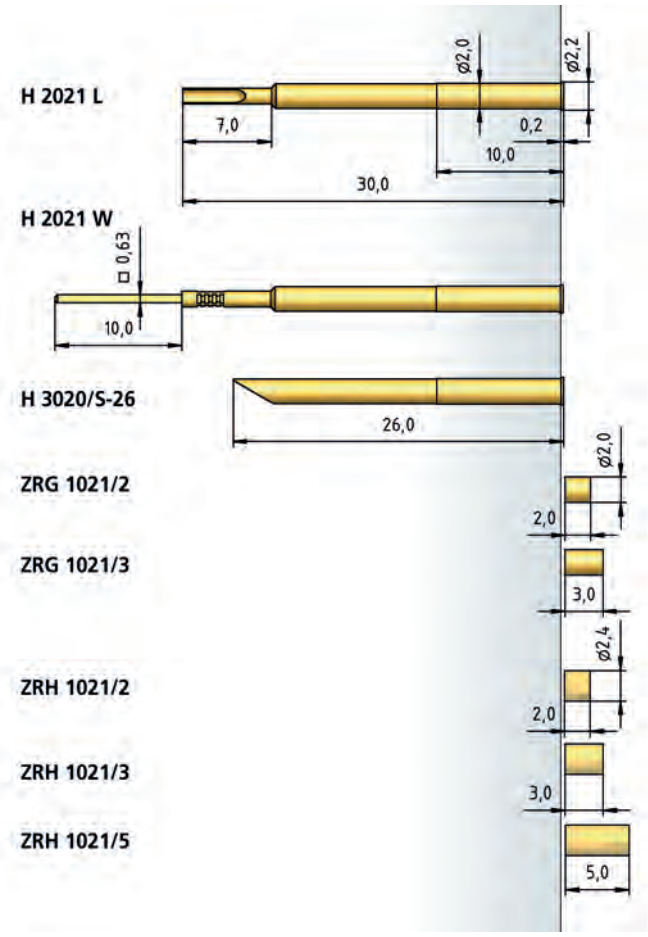


## HOW TO ORDER

| 2028 | - | A | - | 1.5 N | E | - | Au | - | 1.5 |
|---|---|---|---|---|---|---|---|---|---|
| 1 | | 2 | | 3 | 4 | | 5 | | 6 |

1 Series 2 Tip Style 3 Spring Force 4 High Temperature 5 Tip Plating 6 Tip Diameter

L'IMPULSION
Retrouvez nous sur
www.limpulsion.fr

ICT-Test Probe 100 mil / 2.54 mm

# Series 2029



## TIP STYLE · DIAMETER · PLATING




| A | B | BST | C | C |
|---|---|---|---|---|
| 1.50 Ni | 1.30 Rh | 0.80 Au | 1.30 Ni<br>1.50 Au/Rh<br>2.00 Au | 1.30/1.60 Ni/Rh |




| D | EB | G | G | H |
|---|---|---|---|---|
| 1.50 Au | 1.80 Au | 1.30 Au/Ni/Rh<br>1.50 Ni | 1.30/1.60 Ni/Rh | 1.30 Au<br>1.50 Ni<br>1.80 Au |




| K | M1 | Q | Q5 | V |
|---|---|---|---|---|
| 1.80 Au | 1.50 Au | 1.50 Ni<br>2.00 Au | 1.30 Au/Ni | 1.30 Ni |

| BENEFIT | |
|---|---|
| Metric design | |
| Contacting of assembled PCBs | |
| Large selection of head styles | |

| MECHANICAL DATA | |
|---|---|
| Center | 2.54 mm / 100 mil |
| Temperature Range | -30 °C - +120 °C |
| Full Travel | 8.00 mm |
| Working Travel | 6.40 mm |
| Pre-Loaded Spring Force | 0.35/ 0.70/ 0.80/ 0.80 N |
| Spring Force at Working Travel | 1.50/ 2.25/ 3.00/ 5.00 N |

| ELECTRICAL DATA | |
|---|---|
| Max. Current Rating | 3.0 A |
| Typical Continuity Resistance | ≤ 30 mOhm |

| MATERIALS | |
|---|---|
| Barrel | Bronze, gold-plated |
| Spring | Spring Steel, gold-plated |
| Plunger | Steel |
| Receptacle | Bronze, gold-plated |

| RECOMMENDED DIAMETER OF DRILL | |
|---|---|
| HP 2361.1 (Trolitax) | 1.99 mm |
| HGW 2372 | 2.00 mm |

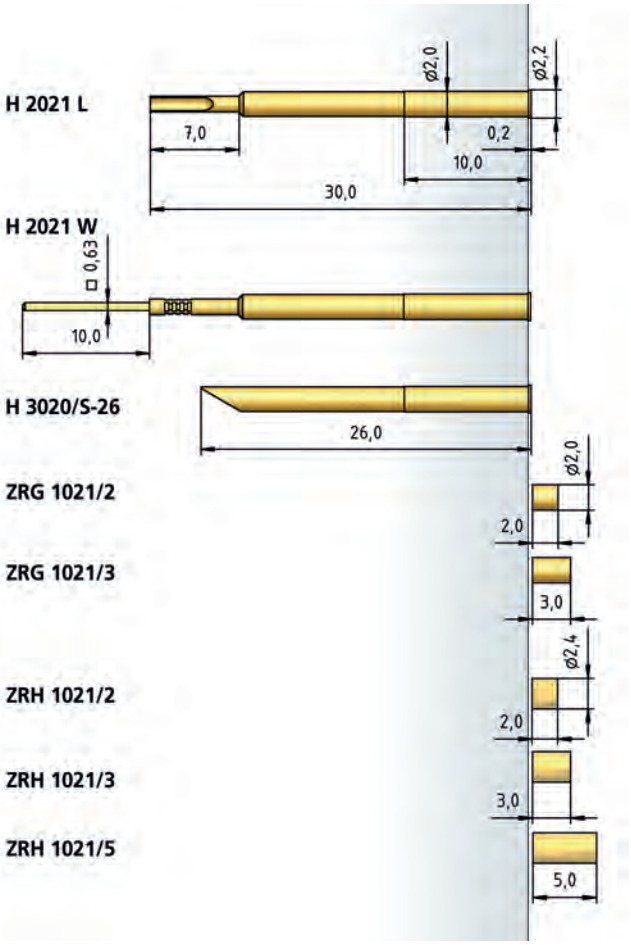


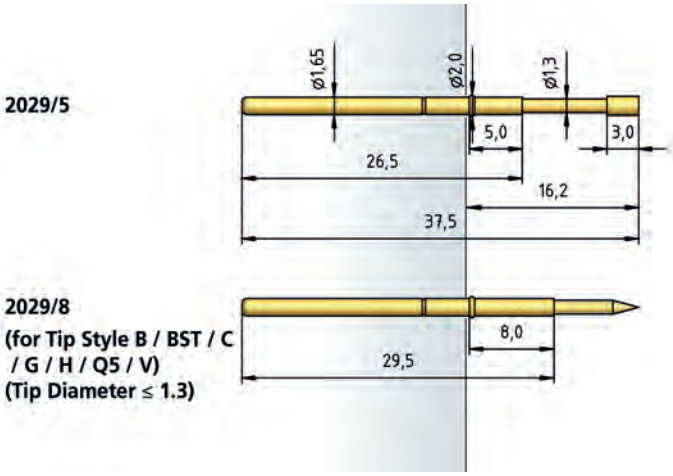


## HOW TO ORDER

| 2029/ | 5 | - | C | - | 1.5 N | - | Rh | - | 1.5 |
|---|---|---|---|---|---|---|---|---|---|
| 1 | 2 | | 3 | | 4 | | 5 | | 6 |

1 Series 2 Collar Height 3 Tip Style 4 Spring Force 5 Tip Plating 6 Tip Diameter

# Receptacles 1012

Receptacles for Series
1012/E · 1012/D · 1013/Z

| RECOMMENDED DIAMETER OF DRILL | |
|---|---|
| HP 2361.1 (Trolitax) | 1.30 mm |
| with pressed-in Ring | 1.36 mm |
| HGW 2372 (Glass filled Material) | 1.32 mm |
| with pressed-in Ring | 1.37 mm |
| **MATERIALS** | |
| Receptacle | Bronze, gold-plated |

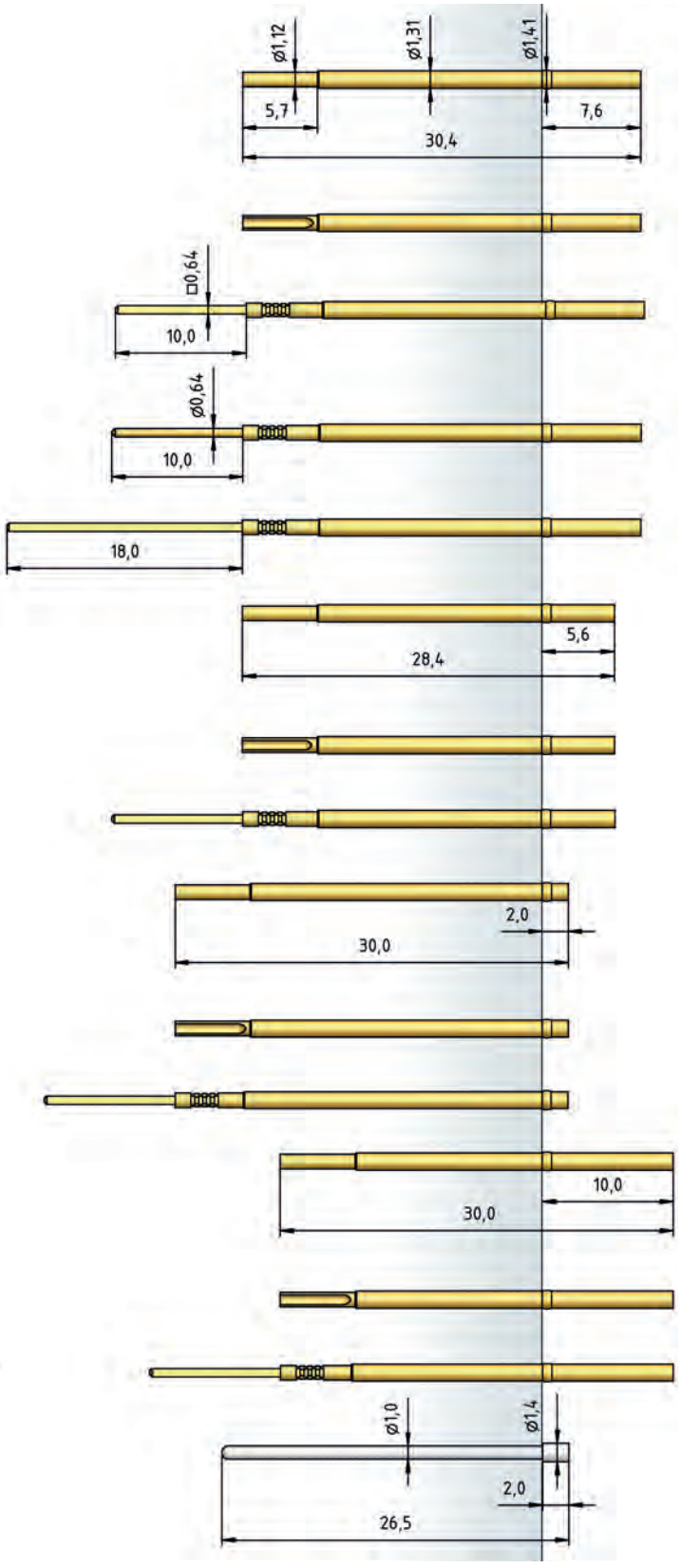


L'IMPULSION
Retrouvez nous sur
www.limpulsion.fr

Receptacles for Series
1025/E · 1025/D · 1034/E · 1036/E

# Receptacles 1025



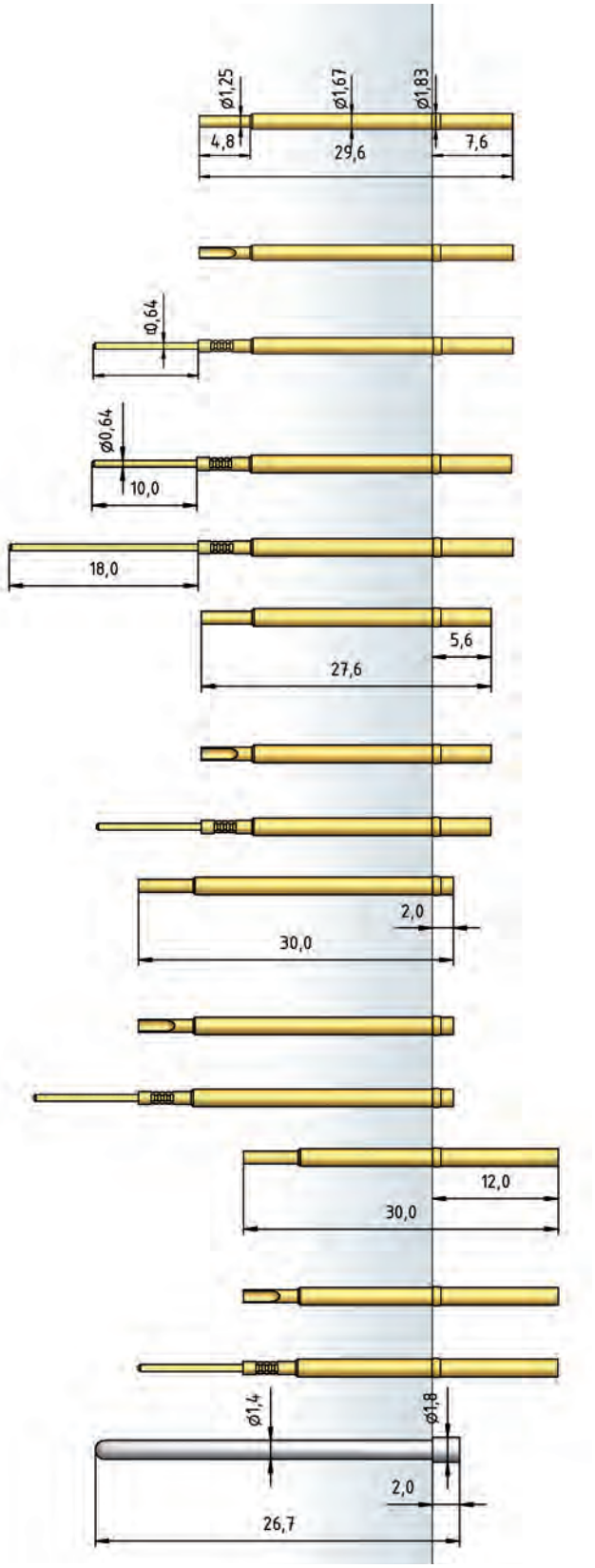


| RECOMMENDED DIAMETER OF DRILL | |
|---|---|
| HP 2361.1 (Trolitax) | 1.65 mm |
| with pressed-in Ring | 1.75 mm |
| HGW 2372 (Glass filled Material) | 1.67 mm |
| with pressed-in Ring | 1.76 mm |
| **MATERIALS** | |
| Receptacle | Bronze, gold-plated |

**H 1025 C**

**H 1025 L**

**H 1025 W**

**H 1025 WR**

**H 1025 W18**

**H 1025 C-K**

**H 1025 L-K**

**H 1025 W-K**

**H 1025/2 C**

**H 1025/2 L**

**H 1025/2 W**

**H 1025/12 C**

**H 1025/12 L**

**H 1025/12 W**

**BGK 1025**

L'IMPULSION
Retrouvez nous sur
www.limpulsion.fr

# HPL TEST PROBES

**To ensure reliable contacting of PCBs which are contaminated with residues and or oxidised from the soldering process, a wide range of ICT Test Probes is available from PTR HARTMANN (see page 62).**

We are amending our product range with our new HPL (High Pre-Loaded Test Probes), which offer better penetration of contaminants and enable better signal transfer even in Lead-Free applications. A comparison of the spring forces (standard and HPL) is shown in fig. 1.

This HPL-Series will not increase stresses on the UUT/Test Fixture and the same probe travel is maintained as with the standard series.

PTR HARTMANN's HPL Test Probes offer special advantages when used as test contacts for lead-free PCBs. Despite the lack of solder on the test points, the new test probes provide secure contacting and satisfy all the test requirements in this sector.

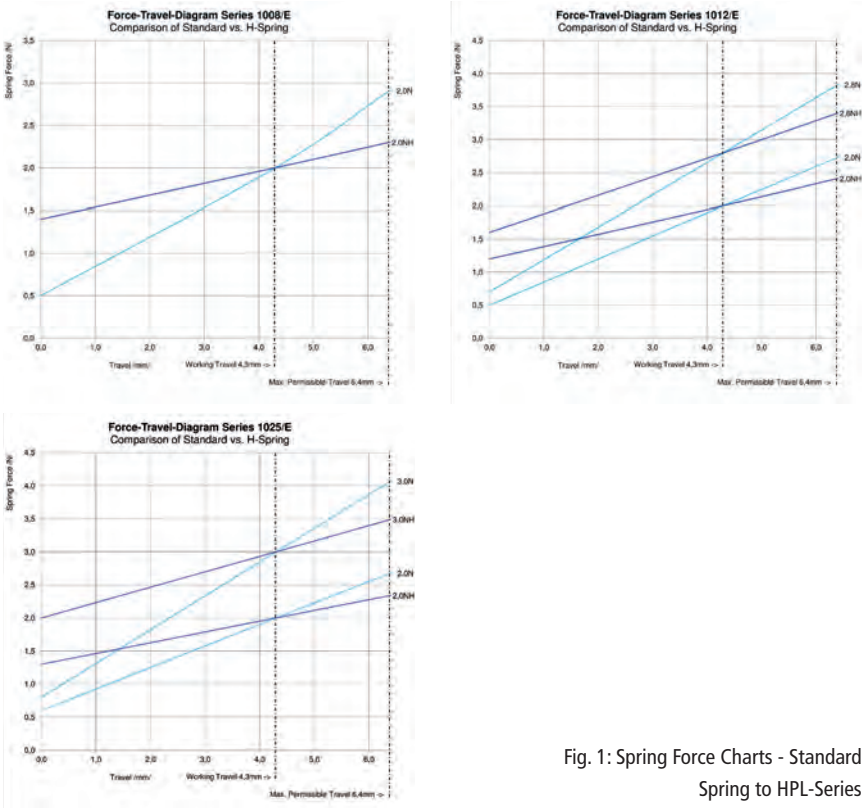


Fig. 1: Spring Force Charts - Standard Spring to HPL-Series

L'IMPULSION
Retrouvez nous sur
www.limpulsion.fr

| SERIES | CENTER | PAGE |
|---|---|---|
| 1008/E (HPL) | 50 mil / 1.27 mm | 80 |
| 1012/E (HPL) | 75 mil / 1.91 mm | 81 |
| 1025/E (HPL) | 100 mil / 2.54 mm | 82 |





L'IMPULSION
Retrouvez nous sur
www.limpulsion.fr

# Series 1008/E

HPL-Test Probe with High Pre-Loaded Spring Force 50 mil / 1.27mm

| BENEFIT | |
|---|---|
| Contacting of assembled, unleaded PCBs | |
| High initial pressure | |
| Large penetration depth | |
| **MECHANICAL DATA** | |
| Center | 1.27 mm / 50 mil |
| Temperature Range | -30 °C - +120 °C |
| Full Travel | 6.40 mm |
| Working Travel | 4.30 mm |
| Pre-Loaded Spring Force | 1.40 N |
| Spring Force at Working Travel | 2.00 N |
| **ELECTRICAL DATA** | |
| Max. Current Rating | 2.0...3.0 A |
| Typical Continuity Resistance | ≤ 20 mOhm |
| **MATERIALS** | |
| Barrel | Bronze, gold-plated |
| Spring | Spring Steel, gold-plated |
| Plunger | Steel, CuBe |
| Receptacle | Bronze, gold-plated |
| Wire AWG 30 (Blue) | Copper, silver-plated, insulated |
| **RECOMMENDED DIAMETER OF DRILL** | |
| HP 2361.1 (Trolitax) | 0.96...0.98 mm |
| with pressed-in Ring | 1.02 mm |
| HGW 2372 (Glass filled Material) | 0.97...0.99 mm |
| with pressed-in Ring | 1.03 mm |

**TIP STYLE · DIAMETER · PLATING**

| | | | | |
|---|---|---|---|---|
|  |  |  |  |  |
| **A** | **A** | **B** | **BST2** | **D** |
| 0.50C Au | 0.90 Au | 0.50 Au | 0.50 Au | 0.50C Au |
|  |  |  |  |  |
| **C** | **F** | **H** | **H1** | **LG** |
| 0.90C Au | 0.60C Au | 0.50 Au<br>0.90C Au | 0.50 Au | 0.40 Au |
|  |  |  |  |  |
| **Q** | **V** | **V1** | **V4** | **VL2** |
| 0.50 Au | 0.50 Au | 0.50 Au | 0.50 Au | 0.50 Au |

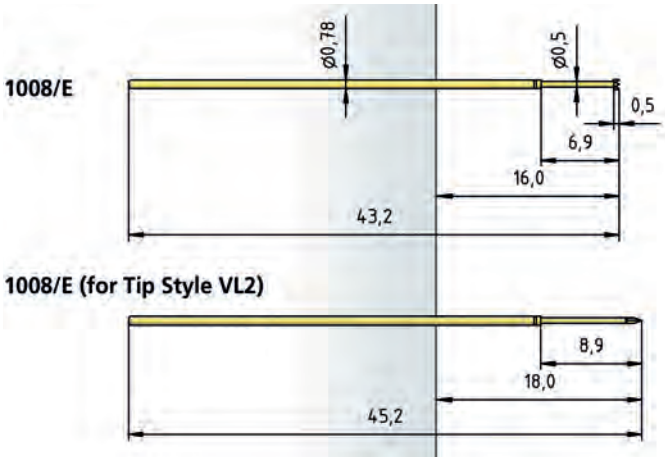


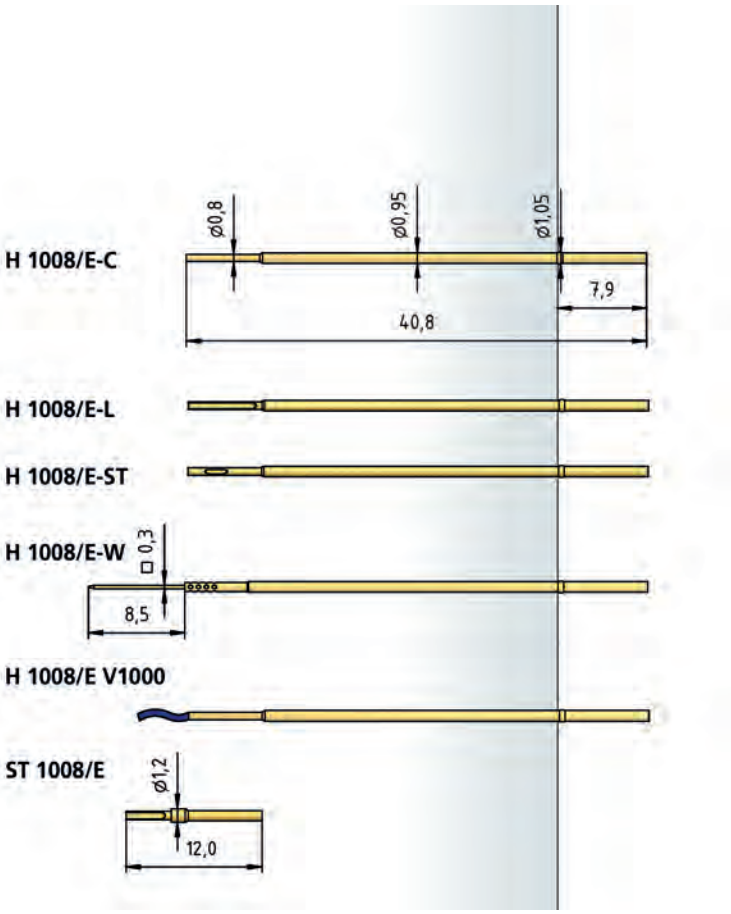


## HOW TO ORDER

| 1008/E | - | F | - | 2.0 N | - | H | - | Au | - | 0.6 | C |
|---|---|---|---|---|---|---|---|---|---|---|---|
| 1 | | 2 | | 3 | | 4 | | 5 | | 6 | 7 |

1 Series 2 Tip Style 3 Spring Force 4 High pre-loaded Spring Force
5 Tip Plating 6 Tip Diameter 7 Tip Material (only for CuBe)

L'IMPULSION
Retrouvez nous sur
www.limpulsion.fr

# HPL-Test Probe with High Pre-Loaded Spring Force 75 mil / 1.91mm

# Series 1012/E

## TIP STYLE · DIAMETER · PLATING

| | | | | |
|---|---|---|---|---|
|  |  |  |  |  |
| **A** | **A6** | **B** | **BD** | **BST1** |
| 1.20C Au | 1.20 Au | 0.64 Au | 0.61C Au | 0.64 Au |
|  |  | 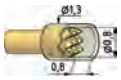 |  |  |
| **BST2** | **C** | **CS1** | **D** | **D** |
| 0.64 Au | 1.00 Au<br>1.20 Au | 0.80/1.30C<br>Au/POM | 0.50C Au | 0.64C Au |
| 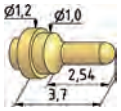 |  |  |  |  |
| **D3** | **F** | **G** | **H** | **H** |
| 0.50C Au | 0.90C Au | 1.15 Au | 0.64 Au | 1.00 Au<br>1.20 Au |
|  |  |  |  |  |
| **H1** | **K** | **M1** | **M6** | **N** |
| 0.64 Au | 1.20 Au | 1.20 Au | 1.30 Au | 0.50 Au |
|  |  |  |  |  |
| **Q** | **Q** | **Q** | **Q6F** | **Q8** |
| 0.50 Au | 0.64 Au | 0.80 Au<br>1.00 Au<br>1.15 Au | 0.64C Au | 1.20 Au |
|  |  |  |  |  |
| **V** | **V1** | **V1** | **V5** | **VL2** |
| 0.64 Au | 0.64 Au | 0.80 Au | 0.64 Au | 0.64 Au |

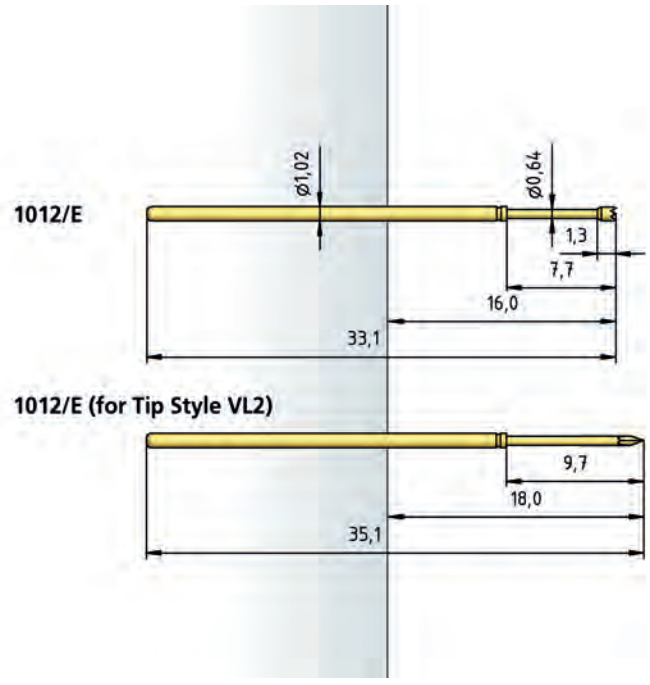


| BENEFIT | |
|---|---|
| Contacting of assembled, unleaded PCBs | |
| High initial pressure | |
| Large penetration depth | |
| **MECHANICAL DATA** | |
| Center | 1.91 mm / 75 mil |
| Temperature Range | -30 °C - +120 °C |
| Full Travel | 6.40 mm |
| Working Travel | 4.30 mm |
| Pre-Loaded Spring Force | 1.20/ 1.60 N |
| Spring Force at Working Travel | 2.00/ 2.80 N |
| **ELECTRICAL DATA** | |
| Max. Current Rating | 3.0...4.0 A |
| Typical Continuity Resistance | ≤ 20 mOhm |
| **MATERIALS** | |
| Barrel | Bronze, gold-plated |
| Spring | Spring Steel, gold-plated |
| Plunger | Steel, CuBe |
| Receptacle | Bronze, gold-plated |
| **RECOMMENDED DIAMETER OF DRILL** | |
| HP 2361.1 (Trolitax) | 1.30 mm |
| with pressed-in Ring | 1.36 mm |
| HGW 2372 (Glass filled Material) | 1.32 mm |
| with pressed-in Ring | 1.37 mm |

**Receptacles see page 76**

## HOW TO ORDER

| 1012/E | - | F | - | 2.8 N | - | H | - | Au | - | 0.9 | C |
|---|---|---|---|---|---|---|---|---|---|---|---|
| 1 | | 2 | | 3 | | 4 | | 5 | | 6 | 7 |

1 Series 2 Tip Style 3 Spring Force 4 High pre-loaded Spring Force
5 Tip Plating 6 Tip Diameter 7 Tip Material (only for CuBe)



L'IMPULSION Retrouvez nous sur www.limpulsion.fr

# Series 1025/E

HPL-Test Probe with High Pre-Loaded Spring Force 100 mil / 2.54mm

| BENEFIT | |
|---|---|
| Contacting of assembled, unleaded PCBs | |
| High initial pressure | |
| Large penetration depth | |
| **MECHANICAL DATA** | |
| Center | 2.54 mm / 100 mil |
| Temperature Range | -30 °C - +120 °C |
| Full Travel | 6.40 mm |
| Working Travel | 4.30 mm |
| Pre-Loaded Spring Force | 1.30/ 2.00 N |
| Spring Force at Working Travel | 2.00/ 3.00 N |
| **ELECTRICAL DATA** | |
| Max. Current Rating | 5.0...8.0 A |
| Typical Continuity Resistance | ≤ 20 mOhm |
| **MATERIALS** | |
| Barrel | Bronze, gold-plated |
| Spring | Spring Steel, gold-plated |
| Plunger | Steel, CuBe |
| Receptacle | Bronze, gold-plated |
| **RECOMMENDED DIAMETER OF DRILL** | |
| HP 2361.1 (Trolitax) | 1.65 mm |
| with pressed-in Ring | 1.75 mm |
| HGW 2372 (Glass filled Material) | 1.67 mm |
| with pressed-in Ring | 1.76 mm |

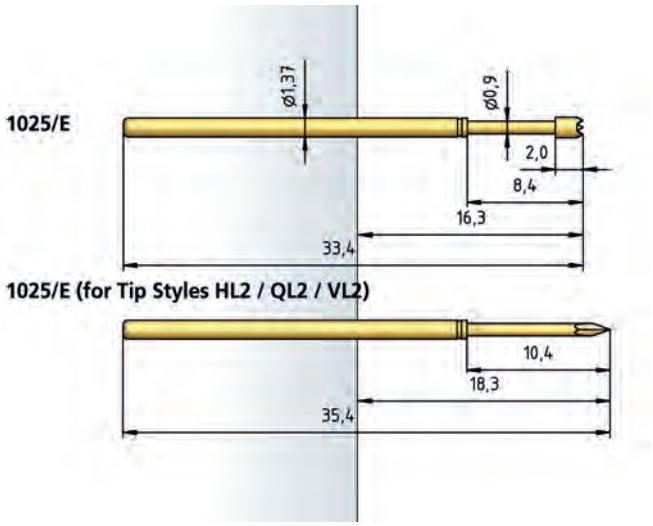


Receptacles see page 77

## HOW TO ORDER

| 1025/E | - | HL2 | - | 3.0 N | - | H | - | Au | - | 0.9 | C |
|---|---|---|---|---|---|---|---|---|---|---|---|
| 1 | | 2 | | 3 | | 4 | | 5 | | 6 | 7 |

1 Series 2 Tip Style 3 Spring Force 4 High pre-loaded Spring Force
5 Tip Plating 6 Tip Diameter 7 Tip Material (only for CuBe)

## TIP STYLE · DIAMETER · PLATING



| A | A6 | B | BD | BST1 |
|---|---|---|---|---|
| 1.50C Au<br>2.00C Au | 1.50 Au<br>1.80C Au | 0.90 Au | 0.90 Au | 0.62 Au/Ni |




| BST2 | BST3 | C | C1 | CS1 |
|---|---|---|---|---|
| 0.90 Au | 1.60C Au | 1.30 Au<br>1.50C Au<br>2.00C Au<br>2.50C Au<br>3.00C Au | 2.30/3.10C Au | 1.80/2.25C Au/HTK |




| CS3 | CS8 | D1 | D | D |
|---|---|---|---|---|
| 1.75/2.40C Au/HTK | 1.80/2.80C Au/HTK | 0.50 Au<br>0.64C Au | 0.90C Au | 1.30 Au<br>1.50 Au |



| E | F | F | G | H |
|---|---|---|---|---|
| 1.50 Au | 0.90 Au | 1.50C Au | 1.06 Au<br>1.30 Au<br>1.50 Au | 0.90 Au |



| H | H1 | HL2 | K | M |
|---|---|---|---|---|
| 1.50 Au<br>1.70 Au<br>2.50 Au | 0.90 Au | 0.90C Au | 1.70 Au | 1.30 Au |



| M1 | M6 | N | Q | Q |
|---|---|---|---|---|
| 1.30 Au1.40 Au1.50 Au | 1.30 Au1.50 Au | 0.50 Au | 0.50 Au0.80 Au | 1.06 Au1.30 Au1.50 Au |



| Q5 | Q6F | Q8 | Q8F | QL2 |
|---|---|---|---|---|
| 1.06 Au | 0.64C Au | 1.50 Au | 0.90C Au | 1.50 Au |




| V | V | V1 | VL2 | V3 |
|---|---|---|---|---|
| 0.90 Au/Ni | 1.30 Au | 0.90 Au | 0.90 Au | 0.90 Au |




| V5 |
|---|
| 0.90 Au |

L'IMPULSION
Retrouvez nous sur
www.limpulsion.fr

# ROTATING TEST PROBES

**Rotating Test Probes offer an alternative for the testing of assembled components under unclean conditions.**



When the plunger is pressed downwards, its special spiral design causes a rotation, limited to approx. 90°.

This principle allows perfect contacting even when the contact surfaces are dirty or oxidised. In combination with the rotating motion, the tip styles – which are normally aggressive – also allow the use of probes with lower contact pressures.

L'IMPULSION
Retrouvez nous sur
www.limpulsion.fr

| SERIES | CENTER | PAGE |
|---|---|---|
| 1008/D | 50 mil / 1.27 mm | 86 |
| 1012/D | 75 mil / 1.91 mm | 87 |
| 1025/D | 100 mil / 2.54 mm | 88 |





L'IMPULSION
Retrouvez nous sur
www.limpulsion.fr

# Series 1008/D

ICT Rotating Test Probe 50 mil / 1.27 mm

| BENEFIT | |
|---|---|
| Use in cases of bad soiling, oxydation or flux residues | |
| Penetration of these platings by rotating movement | |
| **MECHANICAL DATA** | |
| Center | 1.27 mm / 50 mil |
| Temperature Range | -30 °C - +120 °C |
| Full Travel | 6.40 mm |
| Working Travel | 4.30 mm |
| Pre-Loaded Spring Force | 1.00 N |
| Spring Force at Working Travel | 1.50 N |
| **ELECTRICAL DATA** | |
| Max. Current Rating | 2.0...3.0 A |
| Typical Continuity Resistance | ≤ 20 mOhm |
| **MATERIALS** | |
| Barrel | Bronze, gold-plated |
| Spring | Spring Steel, gold-plated |
| Plunger | Steel, gold-plated |
| Receptacle | Bronze, gold-plated |
| **RECOMMENDED DIAMETER OF DRILL** | |
| HP 2361.1 (Trolitax) | 0.96...0.98 mm |
| with pressed-in Ring | 1.02 mm |
| HGW 2372 (Glass filled Material) | 0.97...0.99 mm |
| with pressed-in Ring | 1.03 mm |

**TIP STYLE · DIAMETER · PLATING**



| HD |
|---|
| 0.90 Au |

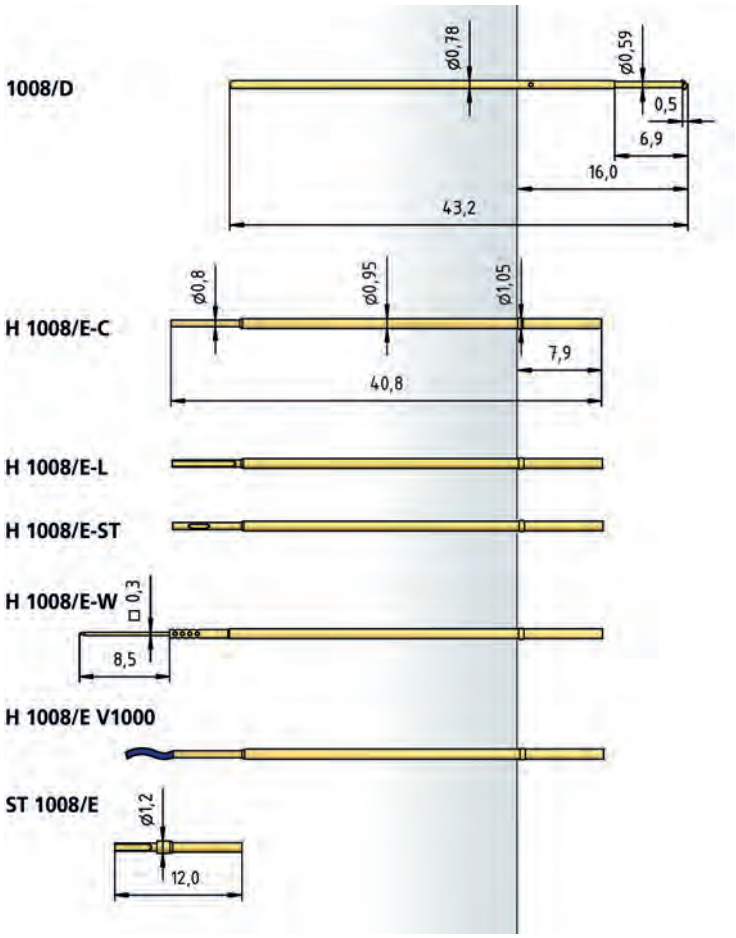


## HOW TO ORDER

| 1008/D | - | HD | - | 1.5 N | - | Au | - | 0.9 |
|---|---|---|---|---|---|---|---|---|
| 1 | | 2 | | 3 | | 4 | | 5 |

1 Series 2 Tip Style 3 Spring Force 4 Tip Plating 5 Tip Diameter

L'IMPULSION
Retrouvez nous sur
www.limpulsion.fr

# ICT Rotating Test Probe 75 mil / 1.91 mm

# Series 1012/D

## TIP STYLE · DIAMETER · PLATING



| KD |
|---|
| 1.20 Au |

## BENEFIT

Use in cases of bad soiling, oxydation or flux residues

Penetration of these platings by rotating movement

| MECHANICAL DATA | |
|---|---|
| Center | 1.91 mm / 75 mil |
| Temperature Range | -30 °C - +120 °C |
| Full Travel | 6.40 mm |
| Working Travel | 4.30 mm |
| Pre-Loaded Spring Force | 0.50 N |
| Spring Force at Working Travel | 2.00 N |

| ELECTRICAL DATA | |
|---|---|
| Max. Current Rating | 3.0...4.0 A |
| Typical Continuity Resistance | ≤ 20 mOhm |

| MATERIALS | |
|---|---|
| Barrel | Bronze, gold-plated |
| Spring | Spring Steel, gold-plated |
| Plunger | Steel, gold-plated |
| Receptacle | Bronze, gold-plated |

| RECOMMENDED DIAMETER OF DRILL | |
|---|---|
| HP 2361.1 (Trolitax) | 1.30 mm |
| with pressed-in Ring | 1.36 mm |
| HGW 2372 (Glass filled Material) | 1.32 mm |
| with pressed-in Ring | 1.37 mm |

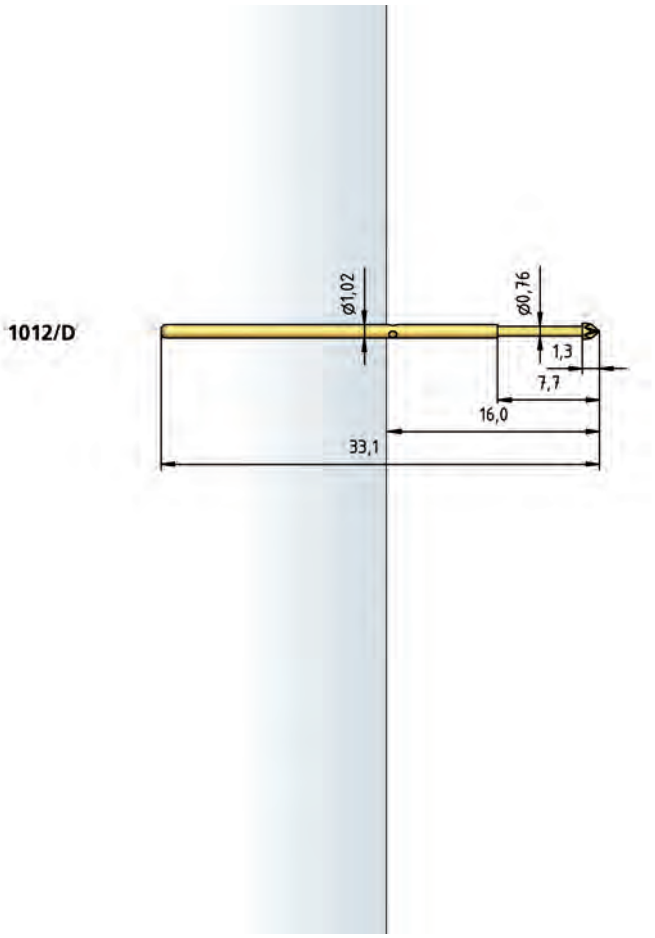


Receptacles see page 76

## HOW TO ORDER

| 1012/D | - | KD | - | 2.0 N | - | Au | - | 1.2 |
|---|---|---|---|---|---|---|---|---|
| 1 | | 2 | | 3 | | 4 | | 5 |

1 Series 2 Tip Style 3 Spring Force 4 Tip Plating 5 Tip Diameter



L'IMPULSION Retrouvez nous sur www.limpulsion.fr

# Series 1025/D

ICT Rotating Test Probe 100 mil / 2.54 mm

| BENEFIT | |
|---|---|
| Use in cases of bad soiling, oxydation or flux residues | |
| Penetration of these platings by rotating movement | |
| **MECHANICAL DATA** | |
| Center | 2.54 mm / 100 mil |
| Temperature Range | -30 °C - +120 °C |
| Full Travel | 6.40 mm |
| Working Travel | 4.30 mm |
| Pre-Loaded Spring Force | 0.60 N |
| Spring Force at Working Travel | 2.00 N |
| **ELECTRICAL DATA** | |
| Max. Current Rating | 5.0...8.0 A |
| Typical Continuity Resistance | ≤ 20 mOhm |
| **MATERIALS** | |
| Barrel | Bronze, gold-plated |
| Spring | Spring Steel, gold-plated |
| Plunger | Steel, gold-plated |
| Receptacle | Bronze, gold-plated |
| **RECOMMENDED DIAMETER OF DRILL** | |
| HP 2361.1 (Trolitax) | 1.65 mm |
| with pressed-in Ring | 1.75 mm |
| HGW 2372 (Glass filled Material) | 1.67 mm |
| with pressed-in Ring | 1.76 mm |

**TIP STYLE · DIAMETER · PLATING**



| KD |
|---|
| 1.50 Au |

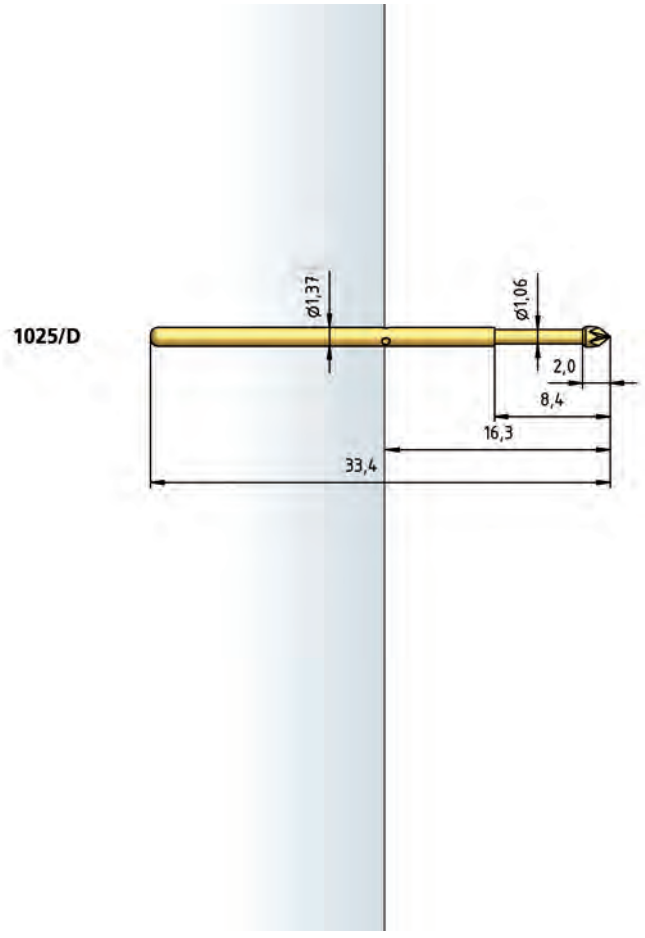


**Receptacles see page 77**

## HOW TO ORDER

| 1025/D | - | KD | - | 2.0 N | - | Au | - | 1.5 |
|---|---|---|---|---|---|---|---|---|
| 1 | | 2 | | 3 | | 4 | | 5 |

1 Series 2 Tip Style 3 Spring Force 4 Tip Plating 5 Tip Diameter

L'IMPULSION Retrouvez nous sur www.limpulsion.fr

# FLYING PROBES

**The Flying Probe testers are designed as a thread variant and are suitable for use in Acculogic (Scorpion) and Digitaltest test systems.
A special locking system and extremely high precision of the single components ensure very high test point accuracy.**

L'IMPULSION
Retrouvez nous sur
www.limpulsion.fr

| SERIES | CENTER | PAGE |
|---|---|---|
| 5248/G | 100 mil / 2.54 mm | 92 |
| 5257/G | 100 mil / 2.54 mm | 93 |





L'IMPULSION
Retrouvez nous sur
www.limpulsion.fr

# Series 5248/G

Flying Probe 100 mil / 2.54 mm

| BENEFIT | |
|---|---|
| Use in Acculogic flying probe testers (Scorpion) and digital test | |
| High test point accuracy | |
| With thread | |
| **MECHANICAL DATA • 5248/G** | |
| Center | 2.54 mm / 100 mil |
| Temperature Range | -30 °C - +120 °C |
| Full Travel | 8.00 mm |
| Working Travel | 6.40 mm |
| Pre-Loaded Spring Force | 0.50 N |
| Spring Force at Working Travel | 1.75 N |
| **MECHANICAL DATA • 5248/G-V** | |
| Center | 2.54 mm / 100 mil |
| Full Travel | 6.50 mm |
| Working Travel | 5.00 mm |
| Pre-Loaded Spring Force | 0.50 N |
| Spring Force at Working Travel | 1.50 N |
| **ELECTRICAL DATA** | |
| Max. Current Rating | 5.0...8.0 A |
| Typical Continuity Resistance | ≤ 20 mOhm |
| **MATERIALS** | |
| Barrel | Brass, gold-plated |
| Spring | Stainless Steel, gold-plated |
| Plunger | Steel |
| Receptacle | Brass, gold-plated |
| **RECOMMENDED DIAMETER OF DRILL** | |
| HP 2361.1 (Trolitax) | 2.00 mm |
| HGW 2372 | 2.03 mm |
| **AVAILABLE SCREW TOOLS** | |
| **Article Designation** | **max. Tip-∅** |
| WFSB 5248/G-2.54-2.0 | 2.0 |

**TIP STYLE · DIAMETER · PLATING**



| A | BST1 | BST1L | V | VX |
|---|---|---|---|---|
| 1.30 Au | 1.00 Au | 1.00 Au | 1.30 Au | 1.30 Au |

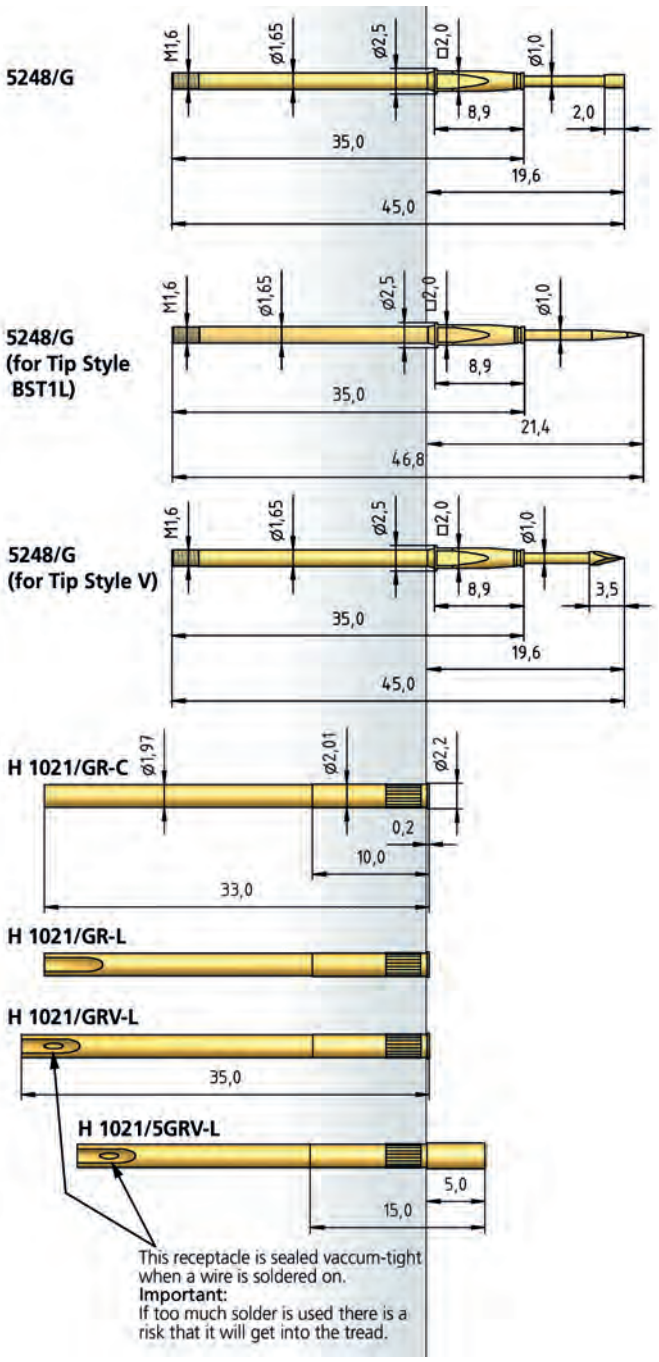


## HOW TO ORDER

| 5248/ | G | - | A | - | 1.75 N | - | Au | - | 1.3 |
|---|---|---|---|---|---|---|---|---|---|
| 1 | 2 | | 3 | | 4 | | 5 | | 6 |

1 Series 2 Threaded Design 3 Tip Style 4 Spring Force 5 Tip Plating 6 Tip Diameter

L'IMPULSION
Retrouvez nous sur
www.limpulsion.fr

Flying Probe 100 mil / 2.54 mm

# Series 5257/G

## TIP STYLE · DIAMETER · PLATING



| A | BST1 | V | VX |
|---|---|---|---|
| 1.40 Au | 1.00 Au | 1.30 Au | 1.30 Au |

| BENEFIT | |
|---|---|
| Use in Acculogic flying probe testers (Scorpion) and digital test | |
| High test point accuracy | |
| With thread | |
| **MECHANICAL DATA** | |
| Center | 2.54 mm / 100 mil |
| Temperature Range | -30 °C - +120 °C |
| Full Travel | 5.30 mm |
| Working Travel | 4.00 mm |
| Pre-Loaded Spring Force | 0.60 N |
| Spring Force at Working Travel | 1.75 N |
| **ELECTRICAL DATA** | |
| Max. Current Rating | 5.0...8.0 A |
| Typical Continuity Resistance | ≤ 20 mOhm |
| **MATERIALS** | |
| Barrel | Brass, gold-plated |
| Spring | Stainless Steel, gold-plated |
| Plunger | Steel |
| Receptacle | Brass, gold-plated |
| **RECOMMENDED DIAMETER OF DRILL** | |
| HP 2361.1 (Trolitax) | 2.00 mm |
| HGW 2372 | 2.03 mm |
| **AVAILABLE SCREW TOOLS** | |
| **Article Designation** | **max. Tip-∅** |
| WFSB 1021/G-2.54-1.8 | 1.8 |
| WFSB 1021/G-2.54-2.0 | 2.0 |
| WFSB 1021/G-3.5-3.0-Z | 3.0 |
| WFSB 1021/G-C2S-3.0-2.5-Z | 2.5 |

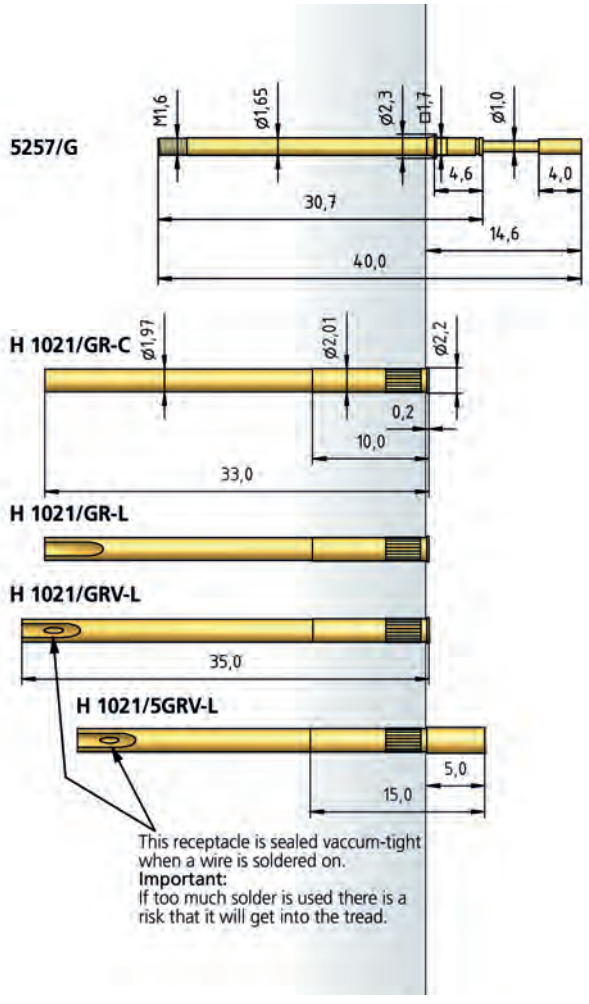


## HOW TO ORDER

| 5257/ | G | - | A | - | 1.75 N | - | Au | - | 1.4 |
|---|---|---|---|---|---|---|---|---|---|
| 1 | 2 | | 3 | | 4 | | 5 | | 6 |

1 Series 2 Threaded Design 3 Tip Style 4 Spring Force 5 Tip Plating 6 Tip Diameter

07

# TEST PROBES WITH THREAD

**Test Probes with Thread are mainly used in the automotive supply industry to test cable harnesses.**

The thread on the test probe and receptacle prevents the test probe from gradually twisting out of the receptacle, something which is aided by the spontaneous opening of the test module. Different sizes with centers from 1.27 to 4.0 mm with different tip styles and contact pressures provide a basis for almost all connectors which need testing. A constantly increasing range of Test Probes for position tests completes this range of products.

A large selection of screwing tools and torque screwdrivers makes it easy to use these Test Probes with Thread (see page 228). Test conditions and connectors change very quickly in this sector, so both the market and our customers demand new types of test probes with increasing frequency. Thanks to the use of the most up-to-date control technology in our in-house lathe center, we are able to satisfy these demands. We can manufacture test probes and create special solutions to meet our customers' individual needs promptly and with a high level of precision.



### Position Test / Push-back Check

Test Probes for the position test check the correct position of contacting elements in connectors (passive push-back test). In contrast to this, during the active push-back test a high defined force is applied to the contacting elements by means of a push-back test probe. This provides a mechanical check on the locking of the contacting elements in the connector and, in the case of an error, evaluates an electrical interruption. The tips are matched to the relevant connector geometry. PTR HARTMANN offers a wide range of different shapes and dimensions.



### Checking for Bent Pins

In order to recognise bent plug pins, special tips are fitted with insulating caps which prevent electrical contact with the tip and generate an error message. The dimensions and shape of the insulation cap and tip plunger are designed to match the geometry of the relevant connector.

L'IMPULSION
Retrouvez nous sur
www.limpulsion.fr

| SERIES | CENTER | PAGE |
|---|---|---|
| 1007/G | 50 mil / 1.27 mm | 96 |
| 1010/G | 75 mil / 1.91 mm | 97 |
| 1012/G | 75 mil / 1.91 mm | 98 |
| 1012/G for Position Test | 75 mil / 1.91 mm | 99 |
| 1015/G | 100 mil / 2.54 mm | 100 |
| 1015/G for Position Test | 100 mil / 2.54 mm | 101 |
| 1021/G | 100 mil / 2.54 mm | 102 |
| 1021/G for Position Test | 100 mil / 2.54 mm | 103 |
| 1021/GT for Position Test | 100 mil / 2.54 mm | 104 |
| 1028/G | 100 mil / 2.54 mm | 105 |
| 5310/G | 100 mil / 2.54 mm | 106 |
| 1060/G | 160 mil / 4.00 mm | 107 |
| 1060/G for Position Test | 160 mil / 4.00 mm | 108 |
| 1060/GT for Position Test | 160 mil / 4.00 mm | 109 |
| 1061/G | 160 mil / 4.00 mm | 110 |
| 5110/G | 160 mil / 4.00 mm | 111 |
| 1042/G | 177 mil / 4.50 mm | 112 |
| Receptacles 1021/G | | 113 |
| Receptacles 1060/G | | 114 |






L'IMPULSION
Retrouvez nous sur
www.limpulsion.fr

# Series 1007/G

Test Probe with Thread 50 mil / 1.27 mm

| BENEFIT | |
|---|---|
| Test probe for cable harness testing | |
| Screwable - threaded design - against the creeping out of the Test Probe out of the receptacle | |
| Short center | |
| **MECHANICAL DATA** | |
| Center | 1.27 mm / 50 mil |
| Temperature Range | -30 °C - +120 °C |
| Full Travel | 5.00 mm |
| Working Travel | 4.00 mm |
| Pre-Loaded Spring Force | 0.20 N |
| Spring Force at Working Travel | 1.10 N |
| **ELECTRICAL DATA** | |
| Max. Current Rating | 3.0 A |
| Typical Continuity Resistance | ≤ 50 mOhm |
| **MATERIALS** | |
| Barrel | Bronze, gold-plated |
| Spring | Spring Steel, gold-plated |
| Plunger | CuBe, gold-plated |
| Receptacle | Bronze, gold-plated |
| **RECOMMENDED DIAMETER OF DRILL** | |
| HP 2361.1 (Trolitax) | 0.99 mm |
| HGW 2372 (Glass filled material) | 1.00 mm |

**AVAILABLE SCREW TOOLS**

| Article Designation | max. Tip-∅ | max. Plate-∅ |
|---|---|---|
| WFSB 1007/G-1.27-1.0 (A) | 1.0 | 1.0 |

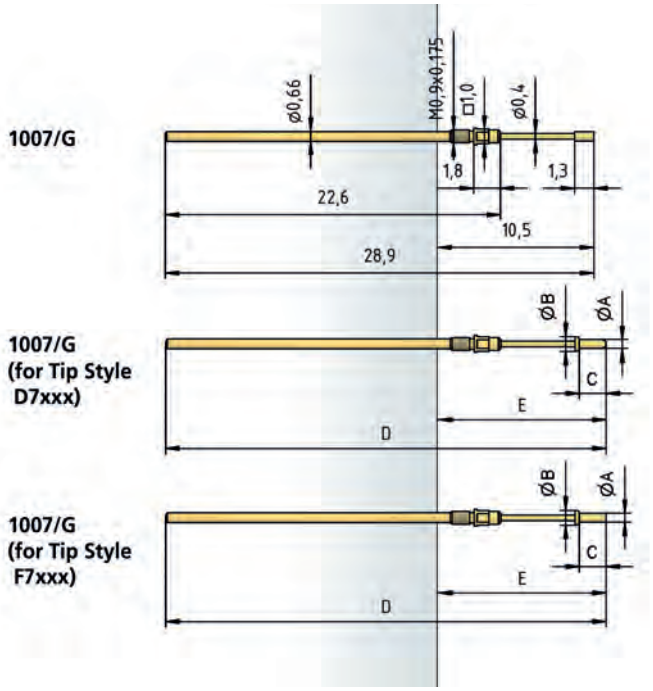


**TIP STYLE · DIAMETER · PLATING**



| B | C | D | D | F |
|---|---|---|---|---|
| 0.40C Au | 0.90C Au | 0.40C Au | 0.64C Au | 0.40C Au |



| F |
|---|
| 0.64C Au |

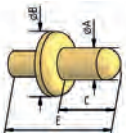

**D7xxx**

Au

| Tip Style | Tip-∅ mm A | Plate-∅ mm B | Tip Length mm C | Overall length mm D | Extension Height mm E | Available Screw Tools |
|---|---|---|---|---|---|---|
| D7001 | 0.60 | 1.00 | 1.80 | 29.70 | 11.30 | A |
| D7002 | 0.60 | 1.00 | 2.60 | 30.50 | 12.10 | A |
| D7003 | 0.50 | 0.90 | 1.40 | 29.30 | 10.90 | A |
| D7008 | 0.50 | 0.90 | 1.00 | 28.90 | 10.50 | A |
| D7010 | 0.50 | 1.00 | 3.60 | 31.50 | 13.10 | A |
| D7011 | 0.50 | 1.00 | 4.00 | 31.90 | 13.50 | A |
| D7012 | 0.50 | 0.90 | 0.80 | 28.70 | 10.30 | A |
| D7013 | 0.50 | 0.90 | 2.00 | 29.90 | 11.50 | A |
| D7014 | 0.50 | 0.90 | 3.50 | 31.40 | 13.00 | A |
| D7015 | 0.80 | 1.30 | 2.60 | 30.50 | 12.10 | / |

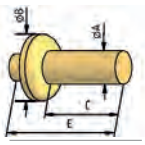

**F7xxx**

0.50C Au

| Tip Style | Tip-∅ mm A | Plate-∅ mm B | Tip Length mm C | Overall length mm D | Extension Height mm E | Available Screw Tools |
|---|---|---|---|---|---|---|
| F7016 | 0.50 | 1.00 | 0.60 | 28.50 | 10.10 | A |

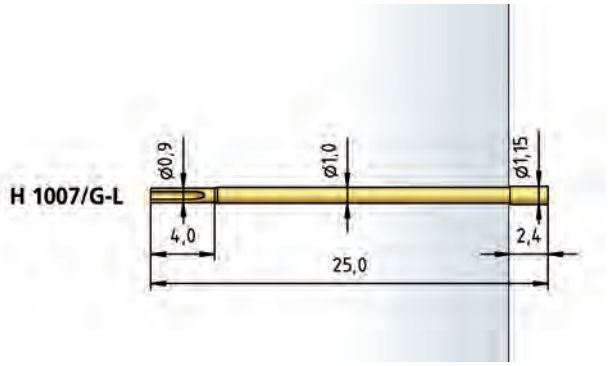


## HOW TO ORDER

| 1007/ | G | - | B | - | 1.1 N | - | Au | - | 0.4 | C |
|---|---|---|---|---|---|---|---|---|---|---|
| 1 | 2 | | 3 | | 4 | | 5 | | 6 | 7 |

1 Series 2 Threaded Design 3 Tip Style 4 Spring Force 5 Tip Plating
6 Tip Diameter 7 Tip Material (only for CuBe)

L'IMPULSION Retrouvez nous sur www.limpulsion.fr

# Test Probe with Thread 75 mil / 1.91 mm

# Series 1010/G

## TIP STYLE · DIAMETER · PLATING



| A | B | B1 | C | D |
|---|---|---|---|---|
| 1.50 Au | 0.45 Au | 0.70 Au | 1.50C Au | 0.50 Au |




| D | DF | D2 | D2 | F |
|---|---|---|---|---|
| 0.65 Au<br>1.00 Au/Ni | 1.00 Au | 0.40 Au | 0.60 Au | 1.00 Au<br>1.50 Au/Ni |



| G | H |
|---|---|
| 1.50 Rh | 1.50C Ni |

## BENEFIT

| |
|---|
| Test probe for cable harness testing |
| Screwable - threaded design - against the creeping out of the Test Probe out of the receptacle |
| Short design |

## MECHANICAL DATA

| | |
|---|---|
| Center | 1.91 mm / 75 mil |
| Temperature Range | -30 °C - +120 °C |
| Full Travel | 3.00 mm |
| Working Travel | 2.40 mm |
| Pre-Loaded Spring Force | 0.30/ 0.50 N |
| Spring Force at Working Travel | 1.50/ 2.25 N |

## ELECTRICAL DATA

| | |
|---|---|
| Max. Current Rating | 3.0...4.0 A |
| Typical Continuity Resistance | ≤ 20 mOhm |

## MATERIALS

| | |
|---|---|
| Barrel | Brass, gold-plated |
| Spring | Spring Steel, Stainless Steel, gold-plated |
| Plunger | Steel, CuBe, gold-plated |
| Receptacle | Brass, gold-plated |

## RECOMMENDED DIAMETER OF DRILL

| | |
|---|---|
| HP 2361.1 (Trolitax) | 1.25 mm |
| HGW 2372 (Glass filled material) | 1.26 mm |

## HIGH-TEMPERATURE APPLICATIONS

| | |
|---|---|
| Temperature Range | -40 °C - +250 °C |
| Pre-Loaded Spring Force | 0.20 N |
| Spring Force at Working Travel (Order Index E) | 0.80 N |

## AVAILABLE SCREW TOOLS

| Article Designation | max. Tip-∅ |
|---|---|
| WFSB 1010/G-1.5-1.0 | 1.0 |
| WFSB 1010/G-2.3-1.5-Z | 1.5 |

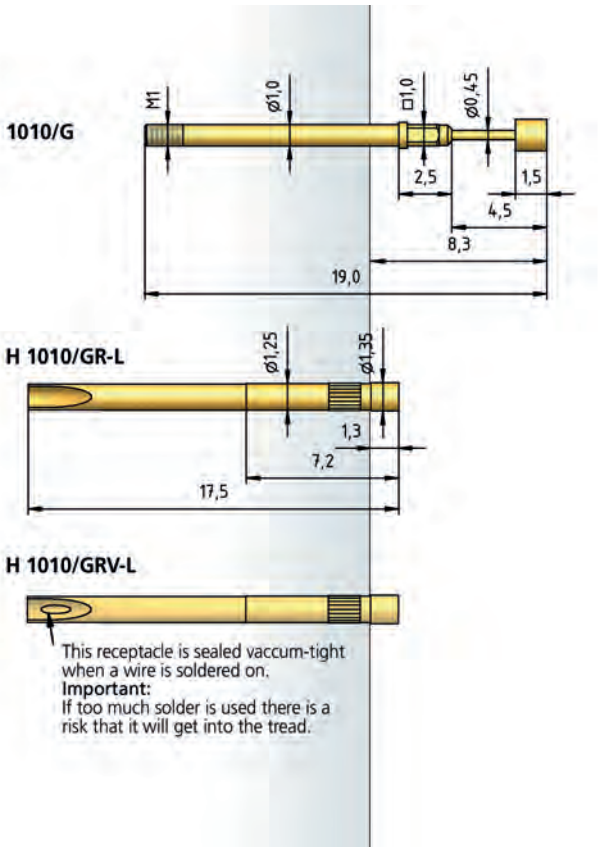


## HOW TO ORDER

| 1010/ | G | - | C | - | 0.8 N | E | - | Au | - | 1.5 | C |
|---|---|---|---|---|---|---|---|---|---|---|---|
| 1 | 2 | | 3 | | 4 | 5 | | 6 | | 7 | 8 |

1 Series 2 Threaded Design 3 Tip Style 4 Spring Force 5 High Temperature 6 Tip Plating 7 Tip Diameter 8 Tip Material (only for CuBe)



L'IMPULSION Retrouvez nous sur www.limpulsion.fr

# Series 1012/G

Test Probe with Thread 75 mil / 1.91 mm

| BENEFIT | |
|---|---|
| Test probe for cable harness testing | |
| Screwable - threaded design - against the creeping out of the Test Probe out of the receptacle | |
| **MECHANICAL DATA** | |
| Center | 1.91 mm / 75 mil |
| Temperature Range | -30 °C - +120 °C |
| Full Travel | 6.40 mm |
| Working Travel | 4.30 mm |
| Pre-Loaded Spring Force | 0.20/ 0.30/ 0.40/ 0.50/ 0.70 N |
| Spring Force at Working Travel | 0.60/ 1.00/ 1.50/ 2.00/ 2.80 N |
| **ELECTRICAL DATA** | |
| Max. Current Rating | 3.0...4.0 A |
| Typical Continuity Resistance | ≤ 20 mOhm |
| **MATERIALS** | |
| Barrel | Brass, gold-plated |
| Spring | Spring Steel, gold-plated |
| Plunger | Steel, CuBe, gold-plated |
| Receptacle | Brass, gold-plated |
| **RECOMMENDED DIAMETER OF DRILL** | |
| HP 2361.1 (Trolitax) | 1.31 mm |
| HGW 2372 (Glass filled material) | 1.33 mm |
| **AVAILABLE SCREW TOOLS** | |
| **Article Designation** | **max. Tip-∅** |
| WFSB 1012/G-1.5-1.0 | 1.0 |
| WFSB 1012/G-1.9-1.5-Z | 1.5 |

## TIP STYLE · DIAMETER · PLATING

| | | | | |
|---|---|---|---|---|
|  |  |  |  |  |
| **A** | **A6** | **B** | **BD** | **BST1** |
| 1.20C Au | 1.20 Au | 0.64 Au | 0.61C Au | 0.64 Au |
|  |  | 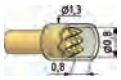 |  |  |
| **BST2** | **C** | **CS1** | **D** | **D** |
| 0.64 Au | 1.00 Au<br>1.20 Au | 0.80/1.30C<br>Au/POM | 0.50C Au | 0.64C Au |
| 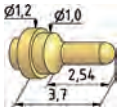 |  |  |  |  |
| **D3** | **F** | **G** | **H** | **H** |
| 0.50C Au | 0.90C Au | 1.15 Au | 0.64 Au | 1.00 Au<br>1.20 Au |
|  |  |  |  |  |
| **H1** | **K** | **M1** | **M6** | **N** |
| 0.64 Au | 1.20 Au | 1.20 Au | 1.30 Au | 0.50 Au |
|  |  |  |  |  |
| **Q** | **Q** | **Q** | **Q8** | **V** |
| 0.50 Au | 0.64 Au | 0.80 Au<br>1.00 Au<br>1.15 Au | 1.20 Au | 0.64 Au |
|  |  |  | | |
| **V1** | **V1** | **V5** | | |
| 0.64 Au | 0.80 Au | 0.64 Au | | |

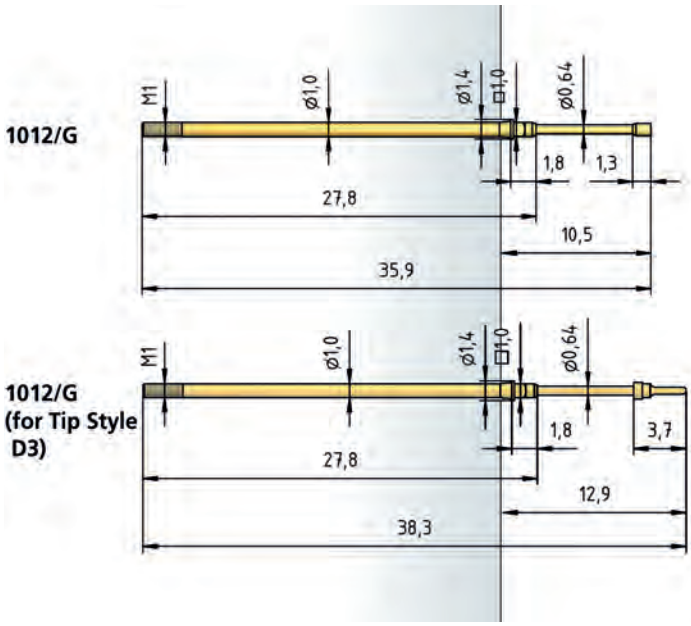


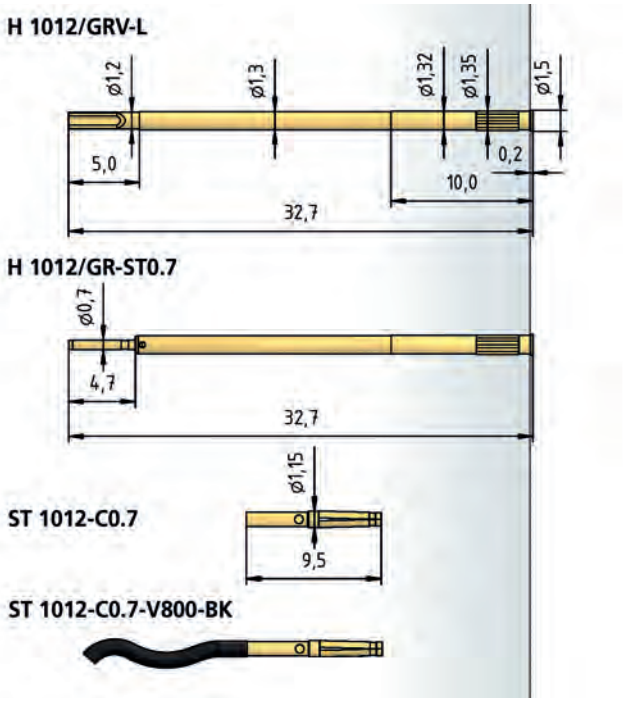


## HOW TO ORDER

| 1012/ | G | - | A | - | 1.5 N | - | Au | - | 1.2 | C |
|---|---|---|---|---|---|---|---|---|---|---|
| 1 | 2 | | 3 | | 4 | | 5 | | 6 | 7 |

1 Series 2 Threaded Design 3 Tip Style 4 Spring Force 5 Tip Plating 6 Tip Diameter 7 Tip Material (only for CuBe)

L'IMPULSION
Retrouvez nous sur
www.limpulsion.fr

# Test Probe with Thread 75 mil / 1.91 mm for Position Test

## Series 1012/G

NEW

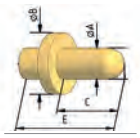

**Dxxxx**

Au

| Tip Style | Tip-∅ mm A | Plate-∅ mm B | Tip Length mm C | Overall length mm D | Extension Height mm E | Available Screw Tools |
|---|---|---|---|---|---|---|
| D0620 | 0.60 | 1.50 | 2.00 | 37.10 | 11.70 | B |
| D0625 | 0.60 | 1.50 | 2.50 | 37.60 | 12.20 | B |
| D0630 | 0.60 | 1.50 | 3.00 | 38.10 | 12.70 | B |
| D0636 | 0.60 | 1.50 | 3.60 | 38.70 | 13.30 | B |
| D0641 | 0.60 | 1.50 | 4.10 | 39.20 | 13.80 | B |
| D0646 | 0.60 | 1.50 | 4.60 | 39.70 | 14.30 | B |
| D0651 | 0.60 | 1.50 | 5.10 | 40.20 | 14.80 | B |
| D1004 | 0.50 | 1.00 | 1.50 | 36.60 | 11.20 | A |
| D1005 | 0.60 | 1.20 | 2.00 | 37.10 | 11.70 | B |
| D1008 | 0.43 | 1.50 | 2.50 | 37.60 | 12.20 | B |

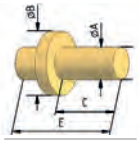

**Fxxxx**

Au

| Tip Style | Tip-∅ mm A | Plate-∅ mm B | Tip Length mm C | Overall length mm D | Extension Height mm E | Available Screw Tools |
|---|---|---|---|---|---|---|
| F1409 | 0.60 | 1.40 | 0.60 | 35.30 | 9.90 | B |
| F1410 | 1.10 | 1.60 | 1.40 | 36.10 | 10.70 | B |
| F1411 | 0.80 | 1.50 | 1.00 | 35.70 | 10.30 | B |

| BENEFIT | |
|---|---|
| Test probe for cable harness testing | |
| Test probe geometry for position test | |
| Screwable - threaded design - against the creeping out of the Test Probe out of the receptacle | |
| Fast wiring system | |
| **MECHANICAL DATA** | |
| Center | 1.91 mm / 75 mil |
| Temperature Range | -30 °C - +120 °C |
| Full Travel | 6.40 mm |
| Working Travel | 4.30 mm |
| Pre-Loaded Spring Force | 0.20/ 0.30/ 0.40/ 0.50/ 0.70 N |
| Spring Force at Working Travel | 0.60/ 1.00/ 1.50/ 2.00/ 2.80 N |
| **ELECTRICAL DATA** | |
| Max. Current Rating | 3.0...4.0 A |
| Typical Continuity Resistance | ≤ 20 mOhm |
| **MATERIALS** | |
| Barrel | Brass, gold-plated |
| Spring | Spring Steel, gold-plated |
| Plunger | Steel, CuBe, gold-plated |
| Receptacle | Brass, gold-plated |
| Stranded Wire AWG 20 (Black) | Copper, tin-plated, insulated |
| **RECOMMENDED DIAMETER OF DRILL** | |
| HP 2361.1 (Trolitax) | 3.31 mm |
| HGW 2372 (Glass filled material) | 3.33 mm |

| AVAILABLE SCREW TOOLS | | |
|---|---|---|
| **Article Designation** | **max. Tip-∅** | **max. Plate-∅** |
| WFSB 1012/G-1.5-1.0 (A) | 1.0 | 1.0 |
| WFSB 1012/G-1.9-1.5-Z (B) | 1.5 | 1.5 |



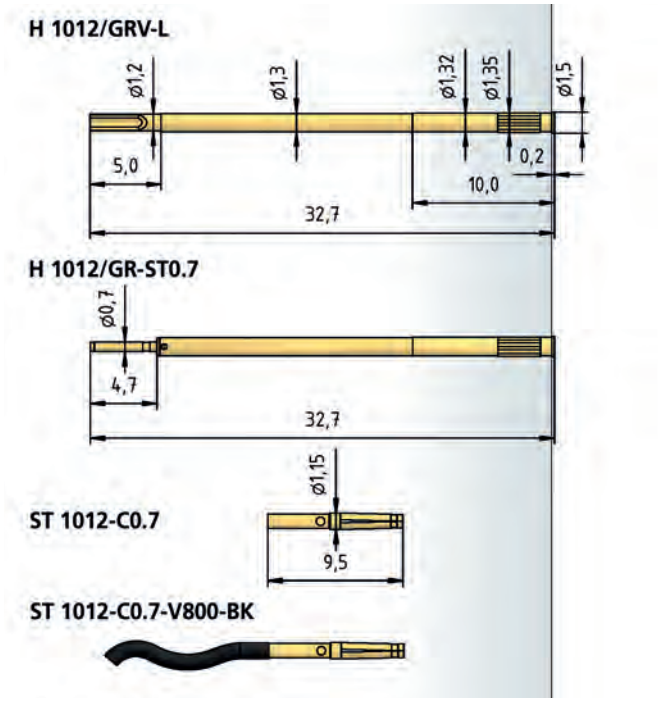


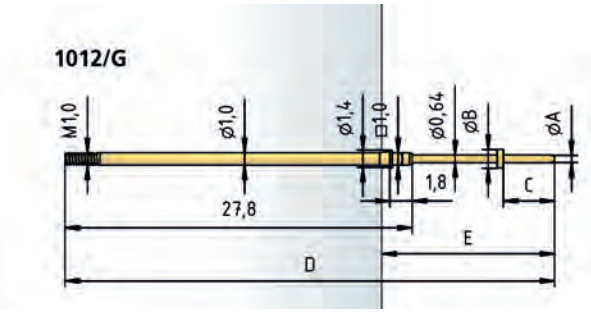


## HOW TO ORDER

| 1012/ | G | - | D1005 | - | 1.5 N | - | Au | - | 0.60 |
|---|---|---|---|---|---|---|---|---|---|
| 1 | 2 | | 3 | | 4 | | 5 | | 6 |

1 Series 2 Threaded Design 3 Tip Style 4 Spring Force 5 Tip Plating 6 Tip Diameter

# Series 1015/G

Test Probe with Thread 100 mil / 2.54 mm

| BENEFIT | |
|---|---|
| Test probe for cable harness testing | |
| Screwable - threaded design - against the creeping out of the Test Probe out of the receptacle | |
| Fast wiring system | |
| **MECHANICAL DATA** | |
| Center | 2.54 mm / 100 mil |
| Temperature Range | -30 °C - +120 °C |
| Full Travel | 4.40 mm |
| Working Travel | 3.50 mm |
| Pre-Loaded Spring Force | 0.25/ 0.40/ 0.40/ 0.30/ 0.70/ 0.60 N |
| Spring Force at Working Travel | 0.70/ 1.00/ 1.50/ 1.70/ 2.50/ 3.00 N |
| **ELECTRICAL DATA** | |
| Max. Current Rating | 3.0...5.0 A |
| Typical Continuity Resistance | ≤ 20 mOhm |
| **MATERIALS** | |
| Barrel | Brass, gold-plated |
| Spring | Spring Steel, gold-plated |
| Plunger | Steel, CuBe, Plastic |
| Receptacle | Brass, gold-plated |
| Stranded Wire AWG 20 (Black) | Copper, tin-plated, insulated |
| **RECOMMENDED DIAMETER OF DRILL** | |
| HP 2361.1 (Trolitax) | 1.68...1.70 mm |
| HGW 2372 (Glass filled material) | 1.68...1.70 mm |
| **AVAILABLE SCREW TOOLS** | |
| **Article Designation** | **max. Tip-∅** |
| WFSB 1015/G-2.54-1.5 | 1.5 |
| WFSB 1015/G-2.54-1.8 | 1.8 |

## TIP STYLE · DIAMETER · PLATING

| A | A6 | B | BS | C |
|---|---|---|---|---|
| 1.00 Au<br>1.80 Au/Ni | 1.80C Au | 0.75 Au/<br>Ni/Rh | 0.38 Au | 1.00 Au<br>1.30C Au<br>1.80C Au/Ni<br>2.30 Rh |

| C1S | C2S | C15 | D | D |
|---|---|---|---|---|
| 0.90/1.37 Au/<br>HTK | 1.20/1.80 Au/<br>HTK | 1.80 Au | 0.50 Ni | 0.60C Au<br>0.65C Au/Ni<br>0.75 Au/Rh |

| D | E | F | F | G |
|---|---|---|---|---|
| 1.25 Au/Ni | 1.80 Au/Ni | 0.75 Rh | 1.50C Au<br>1.80 Rh | 1.30 Rh<br>1.80 Au/Ni |

| H | K | Q |
|---|---|---|
| 1.30 Rh<br>1.80 Au | 1.80 Au/Ni | 0.75C Au |

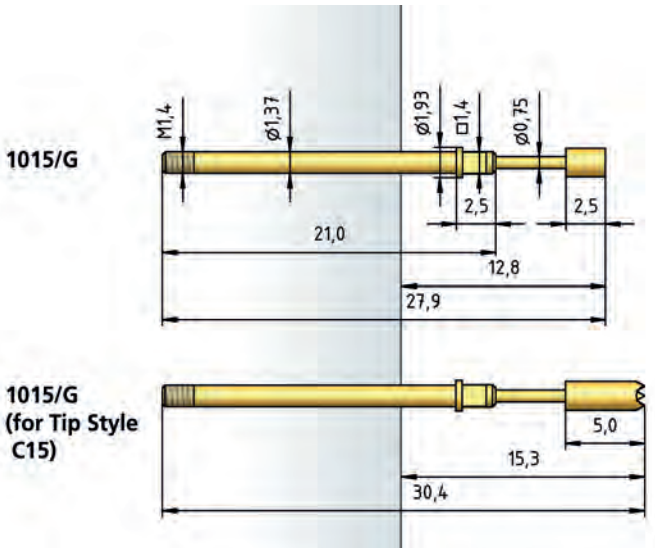


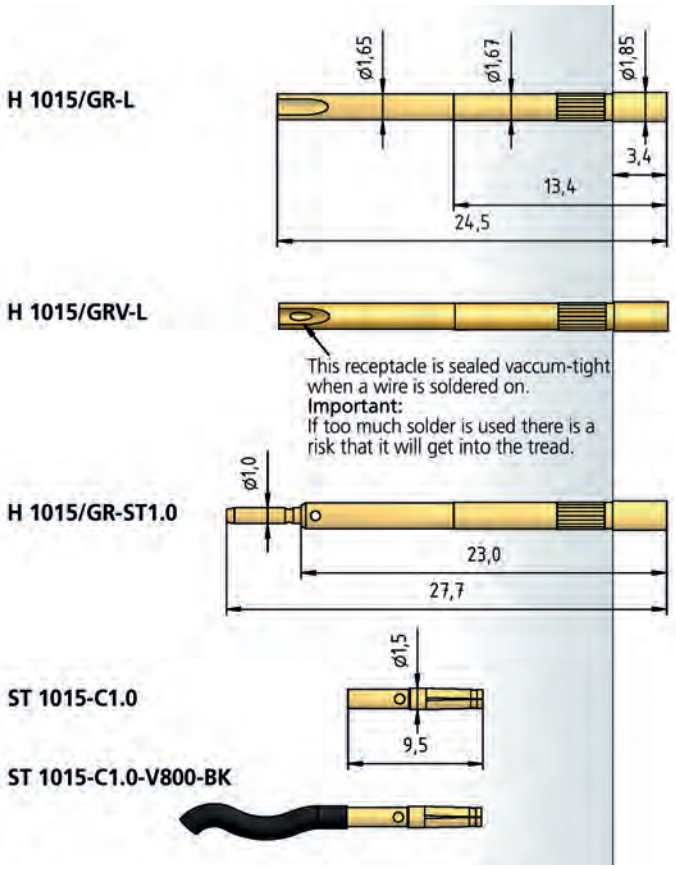


## HOW TO ORDER

| 1015/ | G | - | C | - | 1.5 N | - | Au | - | 1.3 | C |
|---|---|---|---|---|---|---|---|---|---|---|
| 1 | 2 | | 3 | | 4 | | 5 | | 6 | 7 |

1 Series 2 Threaded Design 3 Tip Style 4 Spring Force 5 Tip Plating 6 Tip Diameter 7 Tip Material (only for CuBe)

# Test Probe with Thread 100 mil / 2.54 mm for Position Test

# Series 1015/G

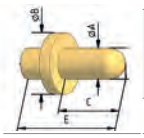

**Dxxxx**

Au

| Tip Style | Tip-∅ mm A | Plate-∅ mm B | Tip Length mm C | Overall length mm D | Extension Height mm E | Available Screw Tools |
|---|---|---|---|---|---|---|
| D1001 | 0.65 | 1.50 | 4.00 | 29.90 | 14.80 | A |
| D1002 | 0.65 | 1.50 | 2.80 | 28.70 | 13.60 | A |
| D1003 | 0.65 | 1.50 | 3.30 | 29.20 | 14.10 | A |
| D1004 | 0.65 | 1.50 | 3.40 | 29.30 | 14.20 | A |
| D1005 | 0.70 | 1.50 | 4.00 | 29.90 | 14.80 | A |
| D1006 | 0.65 | 1.40 | 5.50 | 31.40 | 16.30 | A |
| D0615 | 0.65 | 1.50 | 1.50 | 27.40 | 12.30 | A |
| D0620 | 0.65 | 1.50 | 2.00 | 27.90 | 12.80 | A |
| D0625 | 0.65 | 1.50 | 2.50 | 28.40 | 13.30 | A |
| D0630 | 0.65 | 1.50 | 3.00 | 28.90 | 13.80 | A |
| D0635 | 0.65 | 1.50 | 3.50 | 29.40 | 14.30 | A |
| D0645 | 0.65 | 1.50 | 4.50 | 30.40 | 15.30 | A |
| D0650 | 0.65 | 1.50 | 5.00 | 30.90 | 15.80 | A |

| BENEFIT | |
|---|---|
| Test probe for cable harness testing | |
| Test probe geometry for position test | |
| Screwable - threaded design - against the creeping out of the Test Probe out of the receptacle | |
| Fast wiring system | |
| **MECHANICAL DATA** | |
| Center | 2.54 mm / 100 mil |
| Temperature Range | -30 °C - +120 °C |
| Full Travel | 4.40 mm |
| Working Travel | 3.50 mm |
| Pre-Loaded Spring Force | 0.25/ 0.40/ 0.40/ 0.30/ 0.70/ 0.60 N |
| Spring Force at Working Travel | 0.70/ 1.00/ 1.50/ 1.70/ 2.50/ 3.00 N |
| **ELECTRICAL DATA** | |
| Max. Current Rating | 3.0 A |
| Typical Continuity Resistance | ≤ 30 mOhm |
| **MATERIALS** | |
| Barrel | Brass, gold-plated |
| Spring | Spring Steel, gold-plated |
| Plunger | Steel, gold-plated |
| Receptacle | Brass, gold-plated |
| Stranded Wire AWG 20 (Black) | Copper, tin-plated, insulated |
| **RECOMMENDED DIAMETER OF DRILL** | |
| HP 2361.1 (Trolitax) | 1.68...1.70 mm |
| HGW 2372 (Glass filled material) | 1.68...1.70 mm |
| **AVAILABLE SCREW TOOLS** | |
| **Article Designation** | **max. Plate-∅** |
| WFSB 1015/G-2.54-1.5 (A) | 1.5 |



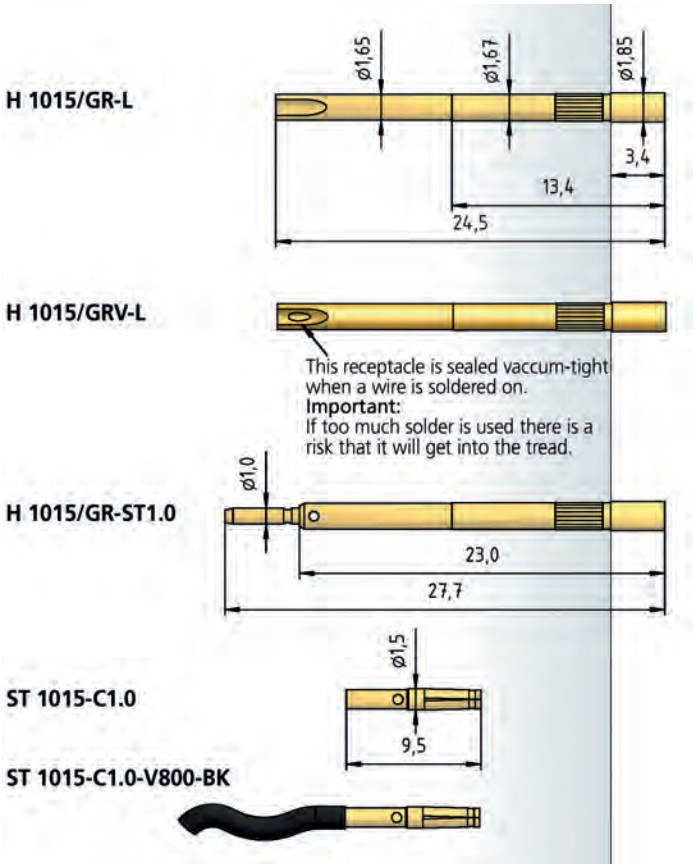


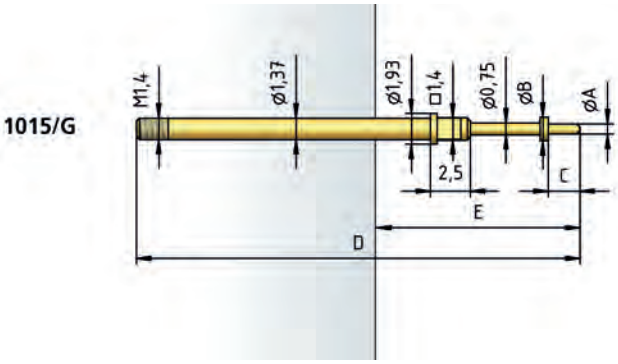


## HOW TO ORDER

| 1015/ | G | - | D1001 | - | 1.5 N | - | Au | - | 0.65 |
|---|---|---|---|---|---|---|---|---|---|
| 1 | 2 | | 3 | | 4 | | 5 | | 6 |

1 Series 2 Threaded Design 3 Tip Style 4 Spring Force 5 Tip Plating 6 Tip Diameter

# Series 1021/G

Test Probe with Thread 100 mil / 2.54 mm

| BENEFIT | |
|---|---|
| Test probe for cable harness testing | |
| Screwable - threaded design - against the creeping out of the Test Probe out of the receptacle | |
| **MECHANICAL DATA** | |
| Center | 2.54 mm / 100 mil |
| Temperature Range | -30 °C - +120 °C |
| Full Travel | 5.30 mm |
| Working Travel | 4.00 mm |
| Pre-Loaded Spring Force | 0.30/ 0.40/ 0.50/ 0.70/ 1.00/ 1.00 N |
| Spring Force at Working Travel | 0.70/ 1.00/ 1.50/ 2.25/ 3.00/ 5.00 N |
| **ELECTRICAL DATA** | |
| Max. Current Rating | 5.0...8.0 A |
| Typical Continuity Resistance | ≤ 25 mOhm |
| **MATERIALS** | |
| Barrel | Brass, gold-plated |
| Spring | Spring Steel, Stainless Steel, gold-plated |
| Plunger | Steel, Plastic |
| Receptacle | Brass, gold-plated |
| Stranded Wire AWG 20 (Black) | Copper, tin-plated, insulated |
| **RECOMMENDED DIAMETER OF DRILL** | |
| HP 2361.1 (Trolitax) | 2.00 mm |
| HGW 2372 (Glass filled material) | 2.03 mm |
| **HIGH-TEMPERATURE APPLICATIONS** | |
| Temperature Range | -40 °C - +250 °C |
| Pre-Loaded Spring Force | 0.50/ 0.50/ 0.80 N |
| Spring Force at Working Travel (Order Index E) | 1.50/ 2.25/ 3.00 N |
| **AVAILABLE SCREW TOOLS** | |
| **Article Designation** | **max. Tip-∅** |
| WFSB 1021/G-2.54-1.8 | 1.8 |
| WFSB 1021/G-2.54-2.0 | 2.0 |
| WFSB 1021/G-3.5-3.0-Z | 3.0 |
| WFSB 1021/G-C2S-3.0-2.5-Z | 2.5 |

**TIP STYLE · DIAMETER · PLATING**

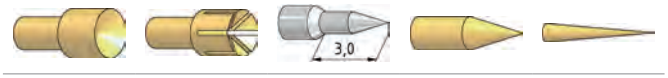

| A | A6 | B | B | BST |
|---|---|---|---|---|
| 2.00 Au/Ni/Rh | 1.80C Au<br>2.00C Au | 0.65 Ni | 0.80 Au/Ni/Rh<br>1.00 Au/Ni | 0.80 Au/Ni |




| C | C1S | C5S | D | D |
|---|---|---|---|---|
| 1.30 Au/Ni/Rh<br>1.40C Au<br>1.50 Au<br>1.80 Au/Ni/Rh<br>2.00 Au/Ni<br>2.30 Rh<br>2.50 Au/Ni<br>3.00 Rh | 1.20/2.00 Au/ HTK | 1.40/2.50 Au/ HTK | 0.65 Au/Ni | 0.80 Au<br>1.00 Au |




| D | D1 | F | F | F1 |
|---|---|---|---|---|
| 1.30 Au/Ni<br>1.40 Au<br>1.80 Ni<br>2.00 Au | 0.65 Au/Ni | 0.80 Au<br>1.00 Au/Ni | 1.40 Au<br>1.50 Au<br>1.80 Au<br>2.00 Au/Ni | 0.65 Ni |



| F4 | G | H | K | M |
|---|---|---|---|---|
| 0.80 Au | 1.30 Au/Ni<br>1.80 Au/Rh<br>2.00 Au | 1.80 Rh<br>2.00 Rh | 1.15 Ni<br>1.75 Ni<br>2.00 Rh | 1.80 Rh |



| Q |
|---|
| 1.00 Ni<br>1.30 Au/Ni |

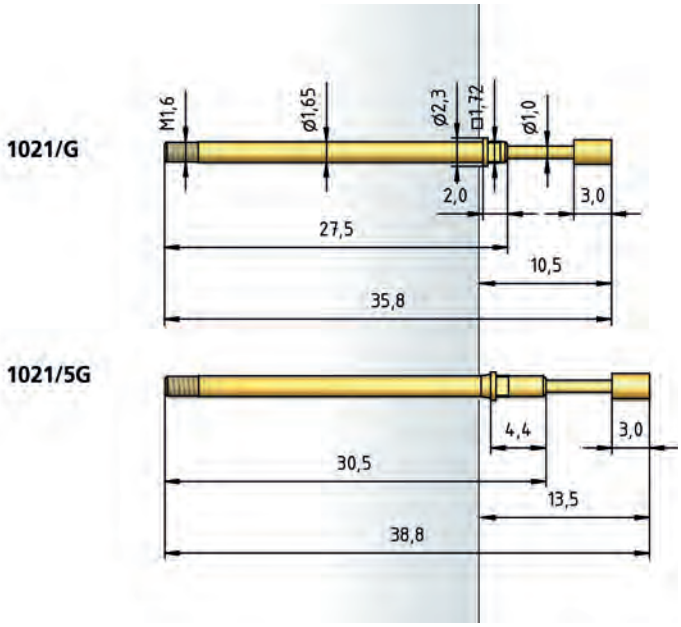


**Receptacles see page 113**

## HOW TO ORDER

| 1021/ | 5 | G | - | F | - | 1.5 N | E | - | Au | - | 2.0 |
|---|---|---|---|---|---|---|---|---|---|---|---|
| 1 | 2 | 3 | | 4 | | 5 | 6 | | 7 | | 8 |

1 Series 2 Collar Height 3 Threaded Design 4 Tip Style 5 Spring Force 6 High Temperature 7 Tip Plating 8 Tip Diameter

L'IMPULSION
Retrouvez nous sur
www.limpulsion.fr

# Test Probe with Thread 100 mil / 2.54 mm for Position Test

# Series 1021/G

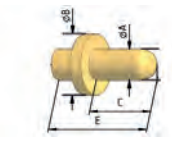

**Dxxxx**

Au

| Tip Style | Tip-∅ mm A | Plate-∅ mm B | Tip Length mm C | Overall length mm D | Extension Height mm E | Available Screw Tools |
|---|---|---|---|---|---|---|
| D0615 | 0.65 | 1.80 | 1.50 | 34.80 | 9.50 | A |
| D0620 | 0.65 | 1.80 | 2.00 | 35.30 | 10.00 | A |
| D0630 | 0.65 | 1.80 | 3.00 | 36.30 | 11.00 | A |
| D0635 | 0.65 | 1.80 | 3.50 | 36.80 | 11.50 | A |
| D0640 | 0.65 | 1.80 | 4.00 | 37.30 | 12.00 | A |
| D0645 | 0.65 | 1.80 | 4.50 | 37.80 | 12.50 | A |
| D0650 | 0.65 | 1.80 | 5.00 | 38.30 | 13.00 | A |
| D0815 | 0.80 | 1.80 | 1.50 | 34.80 | 9.50 | A |
| D0820 | 0.80 | 1.80 | 2.00 | 35.30 | 10.00 | A |
| D0825 | 0.80 | 1.80 | 2.50 | 35.80 | 10.50 | A |
| D0830 | 0.80 | 1.80 | 3.00 | 36.30 | 11.00 | A |
| D0835 | 0.80 | 1.80 | 3.50 | 36.80 | 11.50 | A |
| D0840 | 0.80 | 1.80 | 4.00 | 37.30 | 12.00 | A |
| D0845 | 0.80 | 1.80 | 4.50 | 37.80 | 12.50 | A |
| D0850 | 0.80 | 1.80 | 5.00 | 38.30 | 13.00 | A |
| D1005 | 0.80 | 2.50 | 2.80 | 36.10 | 10.80 | C |
| D1007 | 1.00 | 2.50 | 2.60 | 35.90 | 10.60 | C |
| D1010 | 0.80 | 2.50 | 4.60 | 37.90 | 12.60 | C |
| D1011 | 0.80 | 1.95 | 2.80 | 36.10 | 10.80 | B |
| D1012 | 0.65 | 3.00 | 3.40 | 36.70 | 11.40 | D |
| D1013 | 0.65 | 1.80 | 2.50 | 35.80 | 10.50 | A |
| D1014 | 0.80 | 2.50 | 4.00 | 37.30 | 12.00 | C |
| D1015 | 0.80 | 2.30 | 3.20 | 36.50 | 11.20 | C |
| D1018 | 0.65 | 1.50 | 5.00 | 38.30 | 13.00 | A |
| D1019 | 1.00 | 1.80 | 2.00 | 35.30 | 10.00 | A |
| D1020 | 0.65 | 1.80 | 3.60 | 36.90 | 11.60 | A |
| D1024 | 0.65 | 1.50 | 4.30 | 37.60 | 12.30 | A |
| D7017 | 0.65 | 1.50 | 2.70 | 36.00 | 10.70 | A |

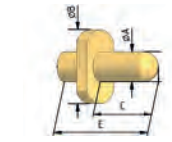

**Dx9xx**

Au

| Tip Style | Tip-∅ mm A | Plate-∅ mm B | Tip Length mm C | Overall length mm D | Extension Height mm E | Available Screw Tools |
|---|---|---|---|---|---|---|
| D1906 | 0.80 | 3.50 | 3.20 | 36.50 | 11.20 | F |
| D1907 | 1.00 | 2.50 | 2.60 | 35.90 | 10.60 | F |
| D1910 | 0.80 | 2.50 | 4.60 | 37.90 | 12.60 | F |
| D1914 | 0.80 | 2.50 | 4.00 | 37.30 | 12.00 | F |
| D1915 | 0.80 | 2.30 | 3.20 | 36.50 | 11.20 | E |

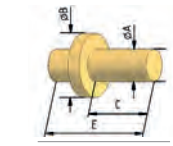

**Fxxxx**

Au

| Tip Style | Tip-∅ mm A | Plate-∅ mm B | Tip Length mm C | Overall length mm D | Extension Height mm E | Available Screw Tools |
|---|---|---|---|---|---|---|
| F0015 | 1.00 | 1.80 | 1.50 | 34.80 | 9.50 | A |
| F0020 | 1.00 | 1.80 | 2.00 | 35.30 | 10.00 | A |
| F0025 | 1.00 | 1.80 | 2.50 | 35.80 | 10.50 | A |
| F0030 | 1.00 | 1.80 | 3.00 | 36.30 | 11.00 | A |
| F0035 | 1.00 | 1.80 | 3.50 | 36.80 | 11.50 | A |
| F0040 | 1.00 | 1.80 | 4.00 | 37.30 | 12.00 | A |
| F0045 | 1.00 | 1.80 | 4.50 | 37.80 | 12.50 | A |
| F0050 | 1.00 | 1.80 | 5.00 | 38.30 | 13.00 | A |
| F1001 | 1.30 | 2.50 | 3.00 | 36.30 | 11.00 | C |
| F1008 | 1.00 | 2.30 | 3.30 | 36.60 | 11.30 | C |
| F1009 | 1.00 | 2.50 | 3.50 | 36.80 | 11.50 | C |
| F1016 | 1.50 | 3.00 | 2.50 | 35.80 | 10.50 | D |
| F1021 | 0.70 | 1.80 | 2.00 | 35.30 | 10.00 | A |
| F1033 | 0.70 | 1.80 | 1.50 | 34.80 | 9.50 | A |

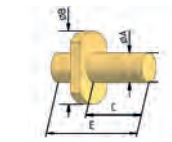

**Fx9xx /** Au

| Tip Style | Tip-∅ mm A | Plate-∅ mm B | Tip Length mm C | Overall length mm D | Extension Height mm E | Available Screw Tools |
|---|---|---|---|---|---|---|
| F1901 | 1.30 | 2.50 | 3.00 | 36.30 | 11.00 | F |
| F1908 | 1.00 | 2.30 | 3.30 | 36.60 | 11.30 | E |
| F1916 | 1.50 | 3.00 | 2.50 | 35.80 | 10.50 | F |

| BENEFIT | |
|---|---|
| Test probe for cable harness testing | |
| Test probe geometry for position test | |
| All designs available with collar height 5.0 mm | |
| Screwable - threaded design - against the creeping out of the Test Probe out of the receptacle | |
| **MECHANICAL DATA** | |
| Center | 2.54 mm / 100 mil |
| Temperature Range | -30 °C - +120 °C |
| Full Travel | 5.30 mm |
| Working Travel | 4.00 mm |
| Pre-Loaded Spring Force | 0.30/ 0.40/ 0.50/ 0.70/ 0.70/ 1.00/ 1.00 N |
| Spring Force at Working Travel | 0.70/ 1.00/ 1.50/ 2.25/ 2.50/ 3.00/ 5.00 N |
| **ELECTRICAL DATA** | |
| Max. Current Rating | 5.0...8.0 A |
| Typical Continuity Resistance | ≤ 25 mOhm |
| **MATERIALS** | |
| Barrel | Brass, gold-plated |
| Spring | Spring Steel, Stainless Steel, gold-plated |
| Plunger | Steel, gold-plated |
| Receptacle | Brass, gold-plated |
| Stranded Wire AWG 20 (Black) | Copper, tin-plated, insulated |
| **RECOMMENDED DIAMETER OF DRILL** | |
| HP 2361.1 (Trolitax) | 2.00 mm |
| HGW 2372 (Glass filled material) | 2.03 mm |
| **HIGH-TEMPERATURE APPLICATIONS** | |
| Temperature Range | -40 °C - +250 °C |
| Pre-Loaded Spring Force | 0.50/ 0.70/ 1.00 N |
| Spring Force at Working Travel (Order Index E) | 1.50/ 2.25/ 3.00 N |

**AVAILABLE SCREW TOOLS**

| Article Designation | max. Plate-∅ |
|---|---|
| WFSB 1021/G-2.54-1.8 (A) | 1.8 |
| WFSB 1021/G-2.54-2.0 (B) | 2.0 |
| WFSB 1021/G-C2S-3.0-2.5-Z (C) | 2.5 |
| WFSB 1021/G-3.5-3.0-Z (D) | 3.0 |
| WFSB 1021/G-2.54-1.5-SW (E) | 2.3 |
| WFSB 1021/G-3.0-1.5-SW (F) | 3.5 |

**1021/G**

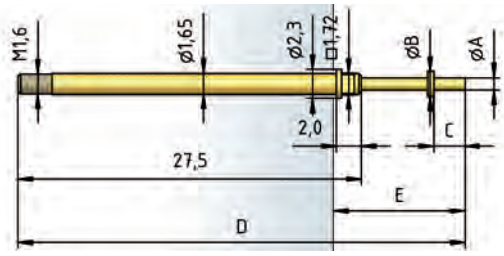


**Receptacles see page 113**

## HOW TO ORDER

| 1021/ | G | - | D1013 | - | 1.5 N | E | - | Au | - | 0.65 |
|---|---|---|---|---|---|---|---|---|---|---|
| 1 | 2 | | 3 | | 4 | 5 | | 6 | | 7 |

1 Series 2 Threaded Design 3 Tip Style 4 Spring Force 5 High Temperature 6 Tip Plating 7 Tip Diameter



L'IMPULSION Retrouvez nous sur www.limpulsion.fr

# Series 1021/GT

Test Probe with Thread 100 mil / 2.54 mm for Position Test

| BENEFIT | |
|---|---|
| Test probe for cable harness testing | |
| Test probe geometry for position test | |
| Simplify screwing | |
| Screwable - threaded design - against the creeping out of the Test Probe out of the receptacle | |
| **MECHANICAL DATA** | |
| Center | 2.54 mm / 100 mil |
| Temperature Range | -30 °C - +120 °C |
| Full Travel | 5.00 mm |
| Working Travel | 4.00 mm |
| Pre-Loaded Spring Force | 0.30/ 0.40/ 0.50/ 0.70/ 0.70/ 1.00/ 1.00 N |
| Spring Force at Working Travel | 0.70/ 1.00/ 1.50/ 2.25/ 2.50/ 3.00/ 5.00 N |
| **ELECTRICAL DATA** | |
| Max. Current Rating | 5.0...8.0 A |
| Typical Continuity Resistance | ≤ 25 mOhm |
| **MATERIALS** | |
| Barrel | Brass, gold-plated |
| Spring | Spring Steel, Stainless Steel, gold-plated |
| Plunger | Steel, gold-plated |
| Receptacle | Brass, gold-plated |
| Stranded Wire AWG 20 (Black) | Copper, tin-plated, insulated |
| **RECOMMENDED DIAMETER OF DRILL** | |
| HP 2361.1 (Trolitax) | 2.00 mm |
| HGW 2372 (Glass filled material) | 2.03 mm |
| **HIGH-TEMPERATURE APPLICATIONS** | |
| Temperature Range | -40 °C - +250 °C |
| Pre-Loaded Spring Force | 0.50/ 0.70/ 1.00 N |
| Spring Force at Working Travel (Order Index E) | 1.50/ 2.25/ 3.00 N |

**AVAILABLE SCREW TOOLS**

| Article Designation | max. Tip-∅ | max. Plate-∅ |
|---|---|---|
| WFSB 1021/GT-1 (A) | 0.0...1.5 | 2.1...2.7 |
| WFSB 1021/GT-2 (B) | 1.6...2.2 | 2.8...3.9 |

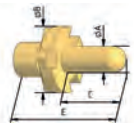

**D17xx**
Au

| Tip Style | Tip-∅ mm A | Plate-∅ mm B | Tip Length mm C | Overall length mm D | Extension Height mm E | Available Screw Tools |
|---|---|---|---|---|---|---|
| D1707 | 1.00 | 2.50 | 2.60 | 35.50 | 10.30 | A |
| D1710 | 0.80 | 2.50 | 4.60 | 37.50 | 12.30 | A |
| D1714 | 0.80 | 2.50 | 4.00 | 36.90 | 11.70 | A |
| D1715 | 0.80 | 2.30 | 3.20 | 36.10 | 10.90 | A |
| D1722 | 0.65 | 2.10 | 3.00 | 35.90 | 10.70 | A |
| D1725 | 0.65 | 2.10 | 3.60 | 36.50 | 11.30 | A |
| D1770 | 0.65 | 2.10 | 2.50 | 35.40 | 10.20 | A |

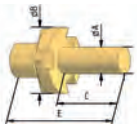

**F17xx**
Au

| Tip Style | Tip-∅ mm A | Plate-∅ mm B | Tip Length mm C | Overall length mm D | Extension Height mm E | Available Screw Tools |
|---|---|---|---|---|---|---|
| F1708 | 1.00 | 2.30 | 3.30 | 36.20 | 11.00 | A |
| F1709 | 1.00 | 2.50 | 3.50 | 36.40 | 11.20 | A |
| F1716 | 1.50 | 3.00 | 2.50 | 35.40 | 10.20 | B |
| F1723 | 1.50 | 2.30 | 3.30 | 36.20 | 11.00 | B |

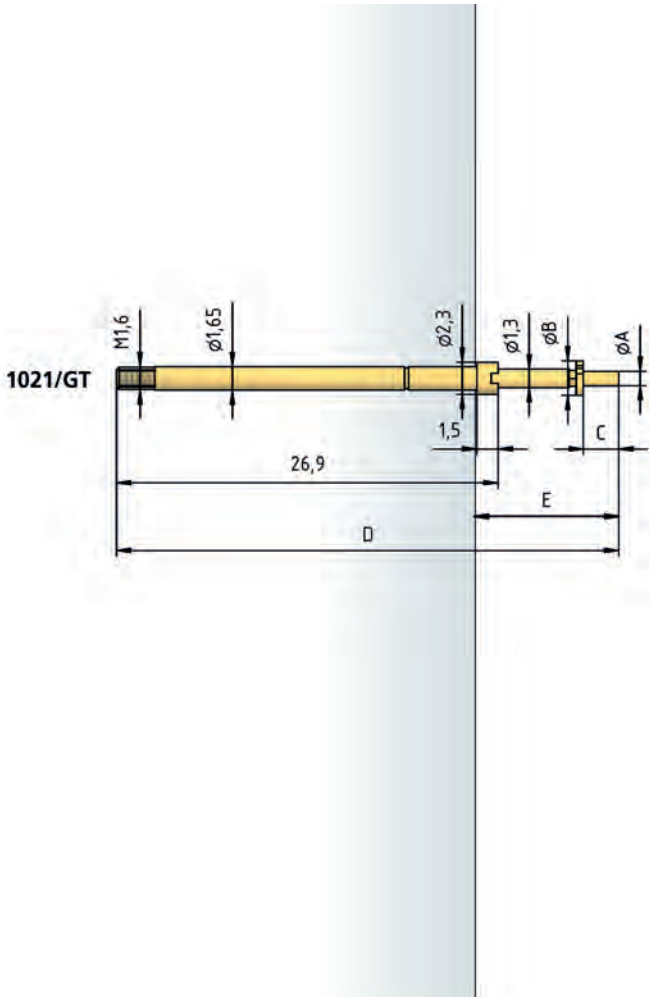


**Receptacles see page 113**

## HOW TO ORDER

| 1021/ | GT | - | D1707 | - | 3.0 N | E | - | Au | - | 2.5 |
|---|---|---|---|---|---|---|---|---|---|---|
| 1 | 2 | | 3 | | 4 | 5 | | 6 | | 7 |

1 Series 2 Threaded Design 3 Tip Style 4 Spring Force 5 High Temperature 6 Tip Plating 7 Tip Diameter

L'IMPULSION Retrouvez nous sur www.limpulsion.fr

Test Probe with Thread 100 mil / 2.54 mm

# Series 1028/G

## TIP STYLE · DIAMETER · PLATING

| A | B | BST | C | CSM |
|---|---|---|---|---|
|  |  |  |  | 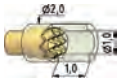 |
| 1.50 Au<br>1.80 Ni | 1.30 Rh | 0.80 Au | 1.40 Au<br>1.80 Rh<br>2.50 Rh<br>3.50 Rh | 1.00/2.00 Au/<br>HTK |

| D | D1 | EB | F | G |
|---|---|---|---|---|
|  |  |  |  |  |
| 1.40 Au<br>2.00 Au | 0.65 Ni<br>0.80 Ni | 1.80 Au | 1.30 Ni | 1.30 Ni |

| G | H | H | K | M6 |
|---|---|---|---|---|
|  |  |  |  |  |
| 1.50 Rh | 1.30 Au | 1.40 Au<br>1.80 Au | 1.30 Au<br>1.75 Ni | 2.00 Rh |

| Q | Q | Q5 | Q8 | V |
|---|---|---|---|---|
|  |  |  |  |  |
| 1.30 Au | 1.80 Au<br>2.00 Au | 1.30 Ni | 2.30 Ni | 1.30 Ni |

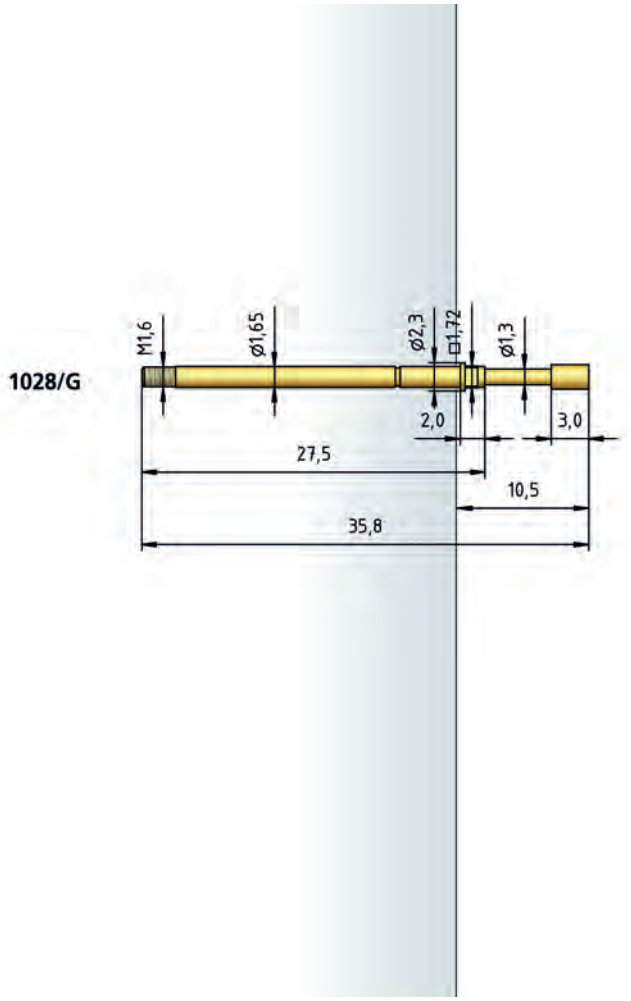


| BENEFIT | |
|---|---|
| Test probe for cable harness testing | |
| Screwable - threaded design - against the creeping out of the Test Probe out of the receptacle | |
| High test accuracy | |
| **MECHANICAL DATA** | |
| Center | 2.54 mm / 100 mil |
| Temperature Range | -30 °C - +120 °C |
| Full Travel | 5.30 mm |
| Working Travel | 4.00 mm |
| Pre-Loaded Spring Force | 0.30/ 0.40/ 0.60/ 0.80/ 0.90/ 1.10/ 1.30 N |
| Spring Force at Working Travel | 0.70/ 1.00/ 1.50/ 2.25/ 2.50/ 3.00/ 5.00 N |
| **ELECTRICAL DATA** | |
| Max. Current Rating | 5.0...8.0 A |
| Typical Continuity Resistance | ≤ 25 mOhm |
| **MATERIALS** | |
| Barrel | Brass, gold-plated |
| Spring | Spring Steel, Stainless Steel, gold-plated |
| Plunger | Steel |
| Receptacle | Brass, gold-plated |
| **RECOMMENDED DIAMETER OF DRILL** | |
| HP 2361.1 (Trolitax) | 2.00 mm |
| HGW 2372 (Glass filled material) | 2.03 mm |
| **HIGH-TEMPERATURE APPLICATIONS** | |
| Temperature Range | -40 °C - +250 °C |
| Pre-Loaded Spring Force | 0.60/ 0.80/ 1.10 N |
| Spring Force at Working Travel (Order Index E) | 1.50/ 2.25/ 3.00 N |

| AVAILABLE SCREW TOOLS | |
|---|---|
| **Article Designation** | **max. Plate-∅** |
| WFSB 1021/G-2.54-1.8 | 1.8 |
| WFSB 1021/G-2.54-2.0 | 2.0 |
| WFSB 1021/G-C2S-3.0-2.5-Z | 2.5 |
| WFSB 1021/G-3.5-3.0-Z | 3.0 |

**Receptacles see page 113**

## HOW TO ORDER

| 1028/ | G | - | A | - | 1.5 N | E | - | Ni | - | 1.8 |
|---|---|---|---|---|---|---|---|---|---|---|
| 1 | 2 | | 3 | | 4 | 5 | | 6 | | 7 |

1 Series 2 Threaded Design 3 Tip Style 4 Spring Force 5 High Temperature 6 Tip Plating 7 Tip Diameter



L'IMPULSION Retrouvez nous sur www.limpulsion.fr

# Series 5310/G

Test Probe with Thread 100 mil / 2.54 mm

| BENEFIT | |
|---|---|
| Test probe for cable harness testing | |
| Screwable - threaded design - against the creeping out of the Test Probe out of the receptacle | |
| Compact Design | |
| **MECHANICAL DATA** | |
| Center | 2.54 mm / 100 mil |
| Temperature Range | -30 °C - +120 °C |
| Full Travel | 4.50 mm |
| Working Travel | 3.50 mm |
| Pre-Loaded Spring Force | 0.30 N |
| Spring Force at Working Travel | 1.50 N |
| **ELECTRICAL DATA** | |
| Max. Current Rating | 5.0...8.0 A |
| Typical Continuity Resistance | ≤ 20 mOhm |
| **MATERIALS** | |
| Barrel | Brass, gold-plated |
| Spring | Spring Steel, gold-plated |
| Plunger | Steel, CuBe |
| Receptacle | Brass, gold-plated |
| **RECOMMENDED DIAMETER OF DRILL** | |
| HP 2361.1 (Trolitax) | 2.00 mm |
| HGW 2372 (Glass filled material) | 2.03 mm |
| **AVAILABLE SCREW TOOLS** | |
| **Article Designation** | **max. Plate-∅** |
| WFSB 1021/G-2.54-1.8 | 1.8 |
| WFSB 1021/G-2.54-2.0 | 2.0 |

**TIP STYLE · DIAMETER · PLATING**




| A | B | C | D1 | H |
|---|---|---|---|---|
| 2.00C Au | 1.00 Au | 2.00C Au | 0.80 Au | 1.00 Au |

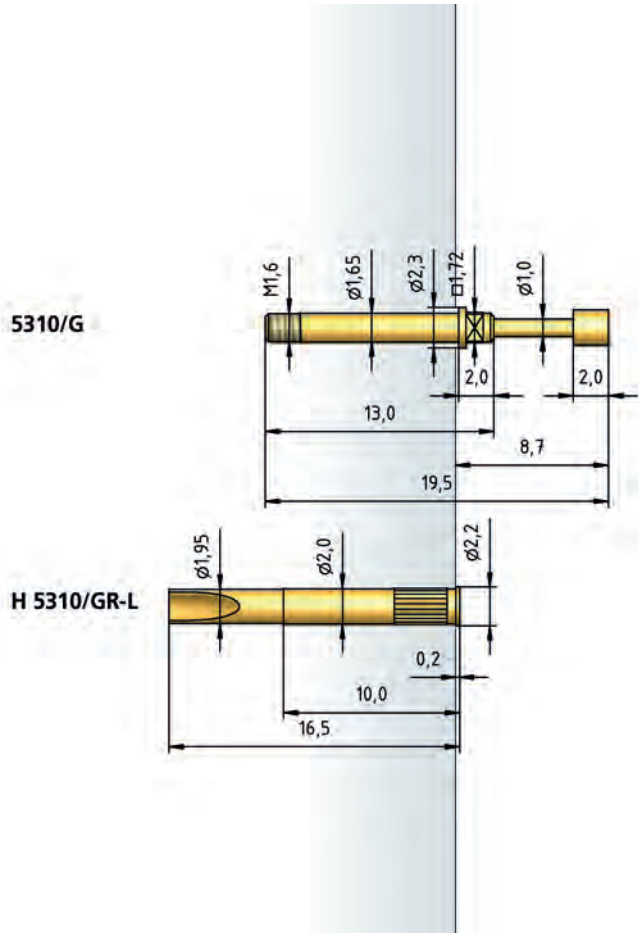


## HOW TO ORDER

| 5310/ | G | - | A | - | 1.5 N | - | Au | - | 2.0 | C |
|---|---|---|---|---|---|---|---|---|---|---|
| 1 | 2 | | 3 | | 4 | | 5 | | 6 | 7 |

1 Series 2 Threaded Design 3 Tip Style 4 Spring Force 5 Tip Plating 6 Tip Diameter 7 Tip Material (only for CuBe)

L'IMPULSION Retrouvez nous sur www.limpulsion.fr

# Test Probe with Thread 160 mil / 4.0 mm

# Series 1060/G

## TIP STYLE · DIAMETER · PLATING



| A | A6 | B | BA | BA1 |
|---|---|---|---|---|
| 2.30 Au<br>2.50 Ni<br>3.00 Au<br>4.00 Au | 2.50C Au<br>4.00C Au | 1.80 Ni/Rh | 1.80 Au/Ni | 1.50 Ni |

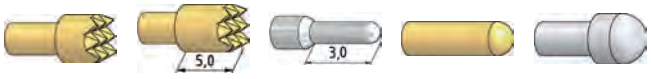


| C | C6 | D | D | D |
|---|---|---|---|---|
| 2.30 Au/Ni/Rh<br>2.50 Au/Ni/Rh<br>3.00 Au/Ni/Rh<br>4.00 Au/Ni/Rh | 3.50 Au/Ni | 1.00 Rh | 1.80 Au | 2.30 Au/Ni<br>2.50 Au/Ni |




| D2 | D3 | F | F | F3 |
|---|---|---|---|---|
| 3.00 Au/Ni | 0.80 Rh<br>1.40 Au | 1.80 Au/Ni | 2.30 Au/Rh<br>2.50 Rh<br>3.00 Au<br>4.00 Rh | 1.00 Rh<br>1.40 Au |



| G | H | K | KF |
|---|---|---|---|
| 2.30 Rh<br>2.50 Ni/Rh<br>4.00 Au/Ni/Rh | 2.50 Ni<br>2.60 Ni<br>3.00 Ni/Rh<br>4.20 Rh | 1.80 Rh<br>3.00 Ni | 2.60 Ni<br>4.00 Ni |

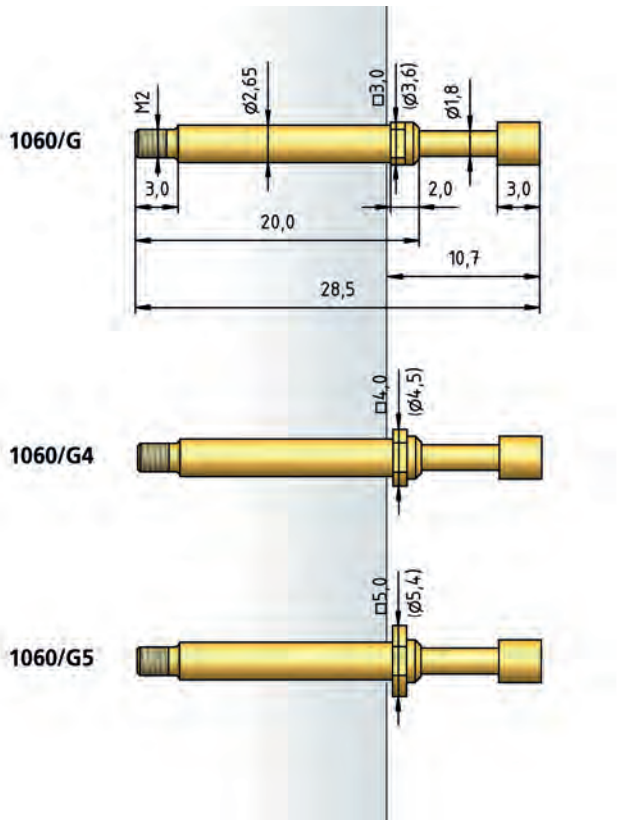


## BENEFIT

Test probe for cable harness testing

Screwable - threaded design - against the creeping out of the Test Probe out of the receptacle

Very robust

## MECHANICAL DATA

| | |
|---|---|
| Center | 4.00 mm / 160 mil |
| Temperature Range | -30 °C - +120 °C |
| Full Travel | 5.50 mm |
| Working Travel | 4.40 mm |
| Pre-Loaded Spring Force | 0.20/ 0.20/ 0.40/ 0.50/ 0.80/ 0.70 N |
| Spring Force at Working Travel | 0.40/ 0.60/ 1.50/ 2.25/ 3.00/ 5.00 N |

## ELECTRICAL DATA

| | |
|---|---|
| Max. Current Rating | 5.0...8.0 A |
| Typical Continuity Resistance | ≤ 30 mOhm |

## MATERIALS

| | |
|---|---|
| Barrel | Brass, gold-plated |
| Spring | Spring Steel, Stainless Steel, gold-plated |
| Plunger | Steel |
| Receptacle | Brass, gold-plated |
| Stranded Wire AWG 20 (Black) | Copper, tin-plated, insulated |

## RECOMMENDED DIAMETER OF DRILL

| | |
|---|---|
| HP 2361.1 (Trolitax) | 3.00 mm |
| HGW 2372 (Glass filled material) | 3.01 mm |

## HIGH-TEMPERATURE APPLICATIONS

| | |
|---|---|
| Temperature Range | -40 °C - +250 °C |
| Pre-Loaded Spring Force | 0.40/ 0.40/ 0.80 N |
| Spring Force at Working Travel (Order Index E) | 1.50/ 2.25/ 3.00 N |

## AVAILABLE SCREW TOOLS

| Article Designation | max. Tip-∅ |
|---|---|
| WFSB 1060/G-4.0-3.0 | 3.0 |
| WFSB 1060/G-5.0-4.0-Z | 4.0 |
| WFSB 1060/G-6.0-5.0-Z | 5.0 |
| WFSB 1060/G4-5.0-4.0 | 4.0 |
| WFSB 1060/G5-6.0-5.0 | 5.0 |

**Receptacles see page 114**

## HOW TO ORDER

| 1060/ | G | - | A | - | 1.5 N | E | - | Au | - | 4.0 |
|---|---|---|---|---|---|---|---|---|---|---|
| 1 | 2 | | 3 | | 4 | 5 | | 6 | | 7 |

1 Series 2 Threaded Design 3 Tip Style 4 Spring Force 5 High Temperature 6 Tip Plating 7 Tip Diameter



L'IMPULSION Retrouvez nous sur www.limpulsion.fr

# Series 1060/G

Test Probe with Thread 160 mil / 4.0 mm for Position Test

| BENEFIT | |
|---|---|
| Test probe for cable harness testing | |
| Test probe geometry for position test | |
| Screwable - threaded design - against the creeping out of the Test Probe out of the receptacle | |
| Very robust | |
| **MECHANICAL DATA** | |
| Center | 4.00 mm / 160 mil |
| Temperature Range | -30 °C - +120 °C |
| Full Travel | 5.50 mm |
| Working Travel | 4.40 mm |
| Pre-Loaded Spring Force | 0.20/ 0.20/ 0.40/ 0.50/ 0.80/ 0.70 N |
| Spring Force at Working Travel | 0.40/ 0.60/ 1.50/ 2.25/ 3.00/ 5.00 N |
| **ELECTRICAL DATA** | |
| Max. Current Rating | 5.0...8.0 A |
| Typical Continuity Resistance | ≤ 30 mOhm |
| **MATERIALS** | |
| Barrel | Brass, gold-plated |
| Spring | Spring Steel, Stainless Steel, gold-plated |
| Plunger | Steel |
| Receptacle | Brass, gold-plated |
| Stranded Wire AWG 20 (Black) | Copper, tin-plated, insulated |
| **RECOMMENDED DIAMETER OF DRILL** | |
| HP 2361.1 (Trolitax) | 3.00 mm |
| HGW 2372 (Glass filled material) | 3.01 mm |
| **HIGH-TEMPERATURE APPLICATIONS** | |
| Temperature Range | -40 °C - +250 °C |
| Pre-Loaded Spring Force | 0.40/ 0.40/ 0.80 N |
| Spring Force at Working Travel (Order Index E) | 1.50/ 2.25/ 3.00 N |
| **AVAILABLE SCREW TOOLS** | |
| **Article Designation** | **max. Plate-∅** |
| WFSB 1060/G-4.0-3.0 (A) | 3.5 |
| WFSB 1060/G-5.0-4.0-Z (B) | 4.0 |
| WFSB 1060/G-6.0-5.0-Z (C) | 5.0 |
| WFSB 1060/G-4.0-2.3-SW (D) | 5.0 |

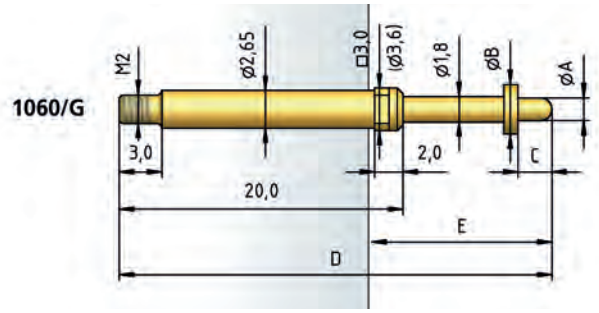


Receptacles see page 114

## HOW TO ORDER

| 1060/ | G | - | D1013 | - | 1.5 N | E | - | Au | - | 1.00 |
|---|---|---|---|---|---|---|---|---|---|---|
| 1 | 2 | | 3 | | 4 | 5 | | 6 | | 7 |

1 Series 2 Threaded Design 3 Tip Style 4 Spring Force 5 High Temperature 6 Tip Plating 7 Tip Diameter

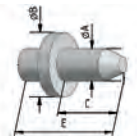

**BAx**

Ni

| Tip Style | Tip-∅ mm A | Plate-∅ mm B | Tip Length mm C | Overall length mm D | Extension Height mm E | Available Screw Tools |
|---|---|---|---|---|---|---|
| BA2 | 1.80 | 4.00 | 3.00 | 29.00 | 11.20 | B |
| BA3 | 1.80 | 4.00 | 2.50 | 29.00 | 11.20 | B |
| BA5 | 1.80 | 4.00 | 2.50 | 28.50 | 10.70 | B |
| BA7 | 1.80 | 4.00 | 2.10 | 29.00 | 11.20 | B |
| BA71 | 1.80 | 4.00 | 2.10 | 29.00 | 11.20 | B |

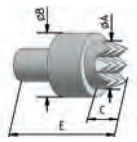

**C42** / Ni

| Tip Style | Tip-∅ mm A | Plate-∅ mm B | Tip Length mm C | Overall length mm D | Extension Height mm E | Available Screw Tools |
|---|---|---|---|---|---|---|
| C42 | 4.00 | 5.00 mm | 1.00 | 28.50 | 10.70 | C |

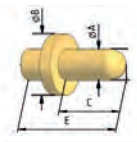

**D1xxx**

Au

| Tip Style | Tip-∅ mm A | Plate-∅ mm B | Tip Length mm C | Overall length mm D | Extension Height mm E | Available Screw Tools |
|---|---|---|---|---|---|---|
| D1001 | 1.40 | 3.50 | 2.40 | 28.90 | 11.10 | A |
| D1002 | 1.40 | 3.50 | 4.00 | 30.50 | 12.70 | A |
| D1003 | 1.40 | 3.50 | 3.30 | 29.80 | 12.00 | A |
| D1004 | 1.00 | 3.50 | 4.00 | 30.50 | 12.70 | A |
| D1013 | 1.00 | 3.50 | 2.80 | 29.30 | 11.50 | A |

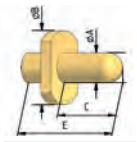

**Dx9xx** / Au

| Tip Style | Tip-∅ mm A | Plate-∅ mm B | Tip Length mm C | Overall length mm D | Extension Height mm E | Available Screw Tools |
|---|---|---|---|---|---|---|
| D1904 | 1.00 | 3.50 | 4.00 | 30.50 | 12.70 | D |

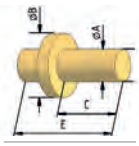

**F1xxx**

Au

| Tip Style | Tip-∅ mm A | Plate-∅ mm B | Tip Length mm C | Overall length mm D | Extension Height mm E | Available Screw Tools |
|---|---|---|---|---|---|---|
| F11 | 1.30 | 4.70 | 7.00 | 33.50 | 15.70 | C |
| F12 | 1.30 | 4.70 | 5.00 | 33.50 | 15.70 | C |
| F13 | 1.30 | 4.70 | 2.00 | 30.50 | 12.70 | C |
| F14 | 2.60 | 4.00 | 1.80 | 29.00 | 11.20 | B |
| F33 | 2.00 | 4.00 | 2.50 | 36.00 | 18.70 | B |
| F40 | 1.50 | 4.00 | 2.65 | 28.50 | 10.70 | B |
| F41 | 4.00 | 4.70 | 2.00 | 28.50 | 10.70 | C |
| F1007 | 1.30 | 4.70 | 5.30 | 31.80 | 14.00 | C |
| F1008 | 1.40 | 3.50 | 2.00 | 28.50 | 10.70 | B |
| F1009 | 4.00 | 5.00 | 2.00 | 28.50 | 10.70 | C |
| F1010 | 1.40 | 3.50 | 1.70 | 28.20 | 10.40 | B |
| F1011 | 2.30 | 3.50 | 2.00 | 28.50 | 10.70 | B |
| F1012 | 1.40 | 3.50 | 3.00 | 29.50 | 11.70 | B |
| F1015 | 2.30 | 3.50 | 1.80 | 28.30 | 10.50 | B |
| F1016 | 1.30 | 4.70 | 3.60 | 30.10 | 12.30 | C |
| F1017 | 1.30 | 4.70 | 2.70 | 29.20 | 11.40 | C |
| F1018 | 1.80 | 4.50 | 1.50 | 28.00 | 10.20 | C |

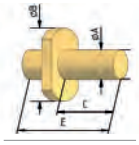

**Fx9xx**

Au

| Tip Style | Tip-∅ mm A | Plate-∅ mm B | Tip Length mm C | Overall length mm D | Extension Height mm E | Available Screw Tools |
|---|---|---|---|---|---|---|
| F1907 | 1.30 | 4.70 | 5.30 | 31.80 | 14.00 | D |
| F1909 | 4.00 | 5.00 | 2.00 | 28.50 | 10.70 | D |
| F1916 | 1.30 | 4.70 | 3.60 | 30.10 | 12.30 | D |
| F1917 | 1.30 | 4.70 | 2.70 | 29.20 | 11.40 | D |
| F1918 | 1.80 | 4.50 | 1.50 | 28.00 | 10.20 | D |

L'IMPULSION Retrouvez nous sur www.limpulsion.fr

# Test Probe with Thread 160 mil / 4.0 mm for Position Test

# Series 1060/GT

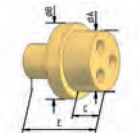

| Tip Style | Tip-∅ mm A | Plate-∅ mm B | Tip Length mm C | Overall length mm D | Extension Height mm E | Available Screw Tools |
|---|---|---|---|---|---|---|
| F1609 | 4.00 | 5.00 | 2.00 | 28.30 | 10.50 | A |
| F1633 | 5.45 | 8.50 | 1.50 | 28.50 | 10.70 | A |

**F16xx**

Au

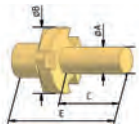

| Tip Style | Tip-∅ mm A | Plate-∅ mm B | Tip Length mm C | Overall length mm D | Extension Height mm E | Available Screw Tools |
|---|---|---|---|---|---|---|
| F1717 | 1.30 | 4.70 | 2.70 | 29.00 | 11.20 | B |
| F1734 | 1.50 | 6.00 | 5.50 | 31.80 | 14.00 | B |

**F17xx**

Au

**1060/GT**

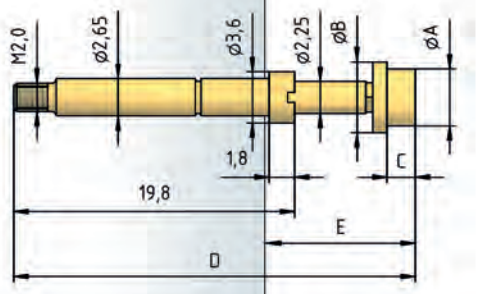


| BENEFIT | |
|---|---|
| Test probe for cable harness testing | |
| Test probe geometry for position test | |
| Simplify screwing | |
| Screwable - threaded design - against the creeping out of the Test Probe out of the receptacle | |
| **MECHANICAL DATA** | |
| Center | 4.00 mm / 160 mil |
| Temperature Range | -30 °C - +120 °C |
| Full Travel | 5.00 mm |
| Working Travel | 4.00 mm |
| Pre-Loaded Spring Force | 0.20/ 0.20/ 0.40/ 0.50/ 0.80/ 0.70 N |
| Spring Force at Working Travel | 0.40/ 0.60/ 1.50/ 2.25/ 3.00/ 5.00 N |
| **ELECTRICAL DATA** | |
| Max. Current Rating | 5.0...8.0 A |
| Typical Continuity Resistance | ≤ 30 mOhm |
| **MATERIALS** | |
| Barrel | Brass, gold-plated |
| Spring | Spring Steel, Stainless Steel, gold-plated |
| Plunger | Steel |
| Receptacle | Brass, gold-plated |
| Stranded Wire AWG 20 (Black) | Copper, tin-plated, insulated |
| **RECOMMENDED DIAMETER OF DRILL** | |
| HP 2361.1 (Trolitax) | 3.00 mm |
| HGW 2372 (Glass filled material) | 3.01 mm |
| **HIGH-TEMPERATURE APPLICATIONS** | |
| Temperature Range | -40 °C - +250 °C |
| Pre-Loaded Spring Force | 0.40/ 0.40/ 0.80 N |
| Spring Force at Working Travel (Order Index E) | 1.50/ 2.25/ 3.00 N |

**AVAILABLE SCREW TOOLS**

| Article Designation | max. Tip-∅ | max. Plate-∅ |
|---|---|---|
| WFSB 1021/GT-1 (A) | from 3.3 | from 3.5 |
| WFSB 1060/GT-1 (B) | 0.0...3.3 | from 4.0 |

**Receptacles see page 114**

## HOW TO ORDER

| 1060/ | GT | - | F1717 | - | 1.5 N | E | - | Au | - | 1.3 |
|---|---|---|---|---|---|---|---|---|---|---|
| 1 | 2 | | 3 | | 4 | 5 | | 6 | | 7 |

1 Series 2 Threaded Design 3 Tip Style 4 Spring Force 5 High Temperature 6 Tip Plating 7 Tip Diameter



L'IMPULSION Retrouvez nous sur www.limpulsion.fr

# Series 1061/G

Test Probe with Thread 160 mil / 4.0 mm

| BENEFIT |
|---|
| Test probe for cable harness testing |
| Increased installation height |
| Screwable - threaded design - against the creeping out of the Test Probe out of the receptacle |
| Long full travel |

| MECHANICAL DATA | |
|---|---|
| Center | 4.00 mm / 160 mil |
| Temperature Range | -30 °C - +120 °C |
| Full Travel | 7.00 mm |
| Working Travel | 5.60 mm |
| Pre-Loaded Spring Force | 0.50/ 1.00 N |
| Spring Force at Working Travel | 1.50/ 3.00 N |

| ELECTRICAL DATA | |
|---|---|
| Max. Current Rating | 5.0 A |
| Typical Continuity Resistance | ≤ 35 mOhm |

| MATERIALS | |
|---|---|
| Barrel | Brass, gold-plated |
| Spring | Spring Steel, gold-plated |
| Plunger | Steel |
| Receptacle | Brass, gold-plated |

| RECOMMENDED DIAMETER OF DRILL | |
|---|---|
| HP 2361.1 (Trolitax) | 3.00 mm |
| HGW 2372 (Glass filled material) | 3.01 mm |

| AVAILABLE SCREW TOOLS | |
|---|---|
| **Article Designation** | **max. Tip-∅** |
| WFSB 1060/G-4.0-3.0 | 3.0 |

## TIP STYLE · DIAMETER · PLATING



| B | BA |
|---|---|
| 1.80 Ni | 1.80 Rh |

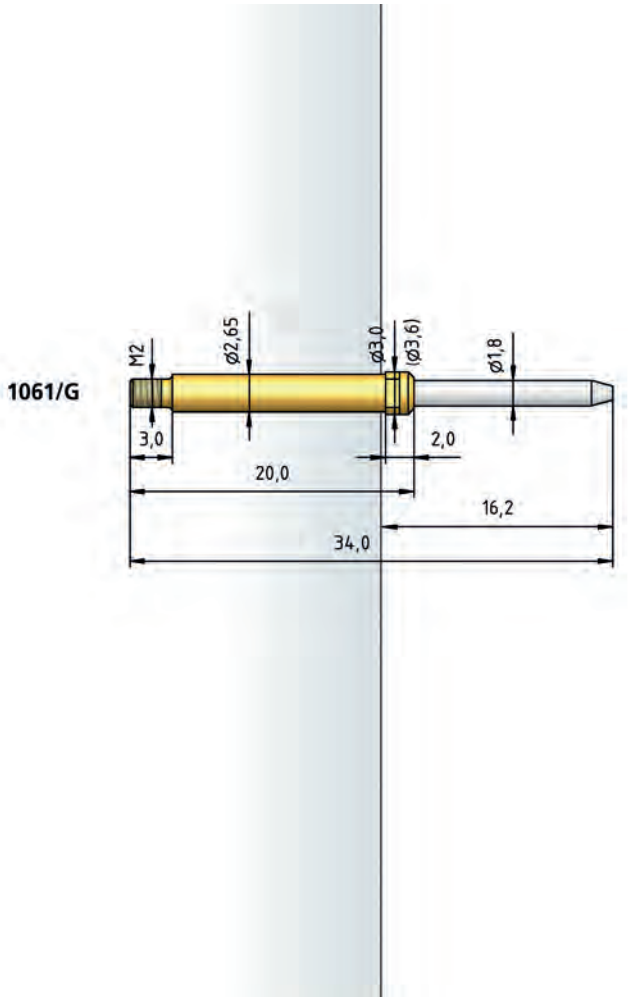


**Receptacles see page 114**

## HOW TO ORDER

| 1061/ | G | - | B | - | 1.5 N | - | Ni | - | 1.8 |
|---|---|---|---|---|---|---|---|---|---|
| 1 | 2 | | 3 | | 4 | | 5 | | 6 |

1 Series 2 Threaded Design 3 Tip Style 4 Spring Force 5 Tip Plating 6 Tip Diameter

L'IMPULSION Retrouvez nous sur www.limpulsion.fr

# Test Probe with Thread 160 mil / 4.0 mm

# Series 5110/G

## TIP STYLE · DIAMETER · PLATING



| C | D | D1 | E | F |
|---|---|---|---|---|
| 2.30C Au<br>3.50C Au | 2.30C Au | 2.30C Au | 2.30C Au | 2.30C Au |



| K2 |
|---|
| 2.30C Au |

## BENEFIT

| |
|---|
| Test probe for cable harness testing |
| Compact design |
| Screwable - threaded design - against the creeping out of the Test Probe out of the receptacle |

## MECHANICAL DATA

| | |
|---|---|
| Center | 4.00 mm / 160 mil |
| Temperature Range | -30 °C - +120 °C |
| Full Travel | 3.50 mm |
| Working Travel | 2.80 mm |
| Spring Force at Working Travel | see High-Temperature Applications |

## ELECTRICAL DATA

| | |
|---|---|
| Max. Current Rating | 10.0 A |
| Typical Continuity Resistance | ≤ 10 mOhm |

## MATERIALS

| | |
|---|---|
| Barrel | Brass, gold-plated |
| Spring | Stainless Steel, gold-plated |
| Plunger | CuBe, gold-plated |
| Receptacle | Brass, gold-plated |

## RECOMMENDED DIAMETER OF DRILL

| | |
|---|---|
| HP 2361.1 (Trolitax) | 3.10 mm |
| HGW 2372 (Glass filled material) | 3.12 mm |

## HIGH-TEMPERATURE APPLICATIONS

| | |
|---|---|
| Temperature Range | -40 °C - +250 °C |
| Pre-Loaded Spring Force | 0.25/ 0.30/ 0.45/ 0.50/ 1.00 N |
| Spring Force at Working Travel (Order Index E) | 0.80/ 1.20/ 1.50/ 2.50/ 3.50 N |

## AVAILABLE SCREW TOOLS

| Article Designation | max. Tip-∅ |
|---|---|
| WFSB 1060/G-4.0-3.0 | 3.0 |
| WFSB 1060/G-5.0-4.0-Z | 4.0 |
| WFSB 1060/G-6.0-5.0-Z | 5.0 |

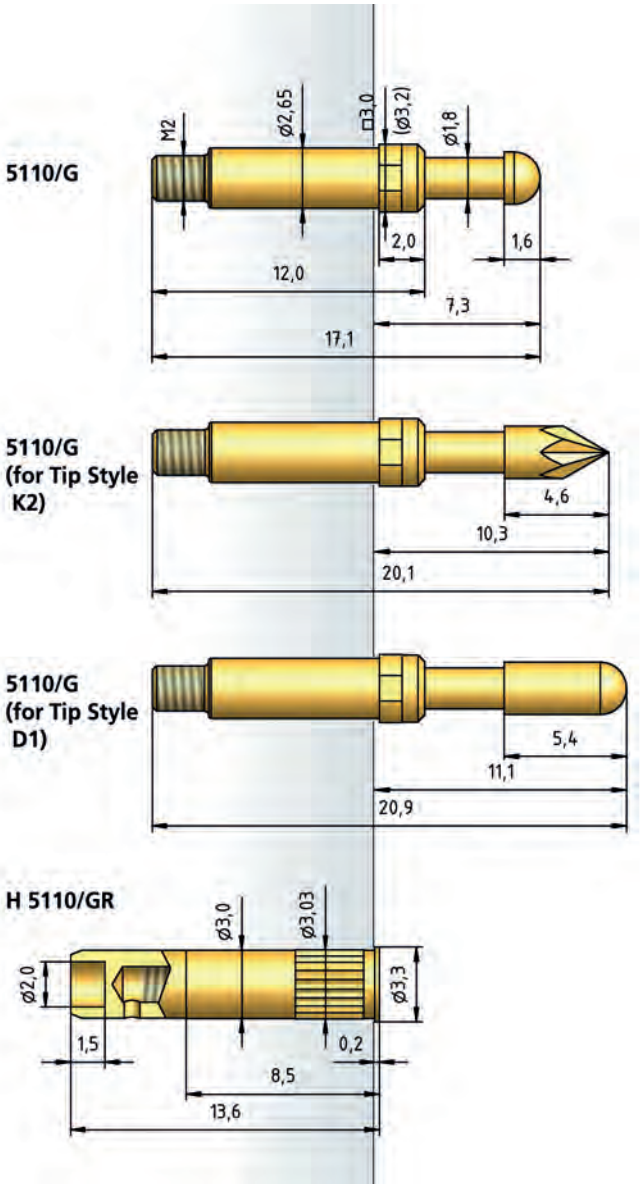


## HOW TO ORDER

| 5110/ | G | - | D | - | 1.5 N | E | - | Au | - | 2.3 | C |
|---|---|---|---|---|---|---|---|---|---|---|---|
| 1 | 2 | | 3 | | 4 | 5 | | 6 | | 7 | 8 |

1 Series 2 Threaded Design 3 Tip Style 4 Spring Force 5 High Temperature 6 Tip Plating 7 Tip Diameter 8 Tip Material (only for CuBe)



L'IMPULSION Retrouvez nous sur www.limpulsion.fr

# Series 1042/G

Test Probe with Thread 177 mil / 4.50 mm

| BENEFIT | |
|---|---|
| Test probe for cable harness testing | |
| Screwable - threaded design - against the creeping out of the Test Probe out of the receptacle | |
| Long full travel | |
| **MECHANICAL DATA** | |
| Center | 4.50 mm / 177 mil |
| Temperature Range | -30 °C - +120 °C |
| Full Travel | 6.00 mm |
| Working Travel | 5.60 mm |
| Pre-Loaded Spring Force | 0.40/ 0.80/ 0.80 N |
| Spring Force at Working Travel | 1.50/ 3.00/ 5.00 N |
| **ELECTRICAL DATA** | |
| **Connector Receptacle** | |
| Max. Current Rating | 5.0...8.0 A |
| Typical Continuity Resistance | ≤ 30 mOhm |
| **Connector Plunger** | |
| Max. Current Rating | 12.0...15.0 A |
| Typical Continuity Resistance | ≤ 10 mOhm |
| **MATERIALS** | |
| Barrel | Brass, gold-plated |
| Spring | Spring Steel, gold-plated |
| Plunger | CuBe |
| Receptacle | Brass, gold-plated |
| **RECOMMENDED DIAMETER OF DRILL** | |
| HP 2361.1 (Trolitax) | 3.50 mm |
| HGW 2372 (Glass filled material) | 3.52 mm |
| **AVAILABLE SCREW TOOLS** | |
| **Article Designation** | **max. Tip-∅** |
| WFSB 3012/G-S1.8 | all |

**TIP STYLE · DIAMETER · PLATING**



| C |
|---|
| 3.00C Au |
| 4.00C Au |

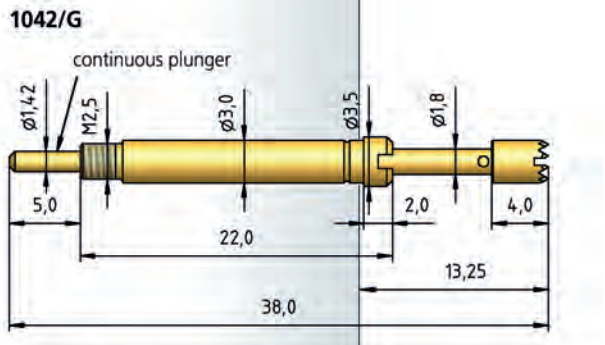


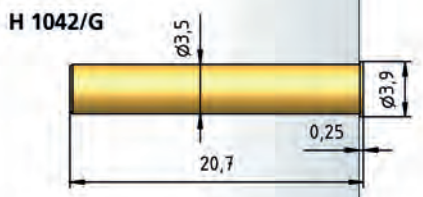


## HOW TO ORDER

| 1042/ | G | - | C | - | 1.5 N | - | Au | - | 4.0 | C |
|---|---|---|---|---|---|---|---|---|---|---|
| 1 | 2 | | 3 | | 4 | | 5 | | 6 | 7 |

1 Series 2 Threaded Design 3 Tip Style 4 Spring Force 5 Tip Plating 6 Tip Diameter 7 Tip Material (only for CuBe)

L'IMPULSION Retrouvez nous sur www.limpulsion.fr

Receptacles for Series
1021/G · 1021/G for Position Test · 1021/GT for Position Test · 1028/G

# Receptacles 1021/G

| RECOMMENDED DIAMETER OF DRILL | |
|---|---|
| HP 2361.1 (Trolitax) | 2.00 mm |
| HGW 2372 (Glass filled material) | 2.03 mm |
| **MATERIALS** | |
| Receptacle | Brass, gold-plated |
| Stranded Wire AWG 20 (Black) | Copper, tin-plated, insulated |

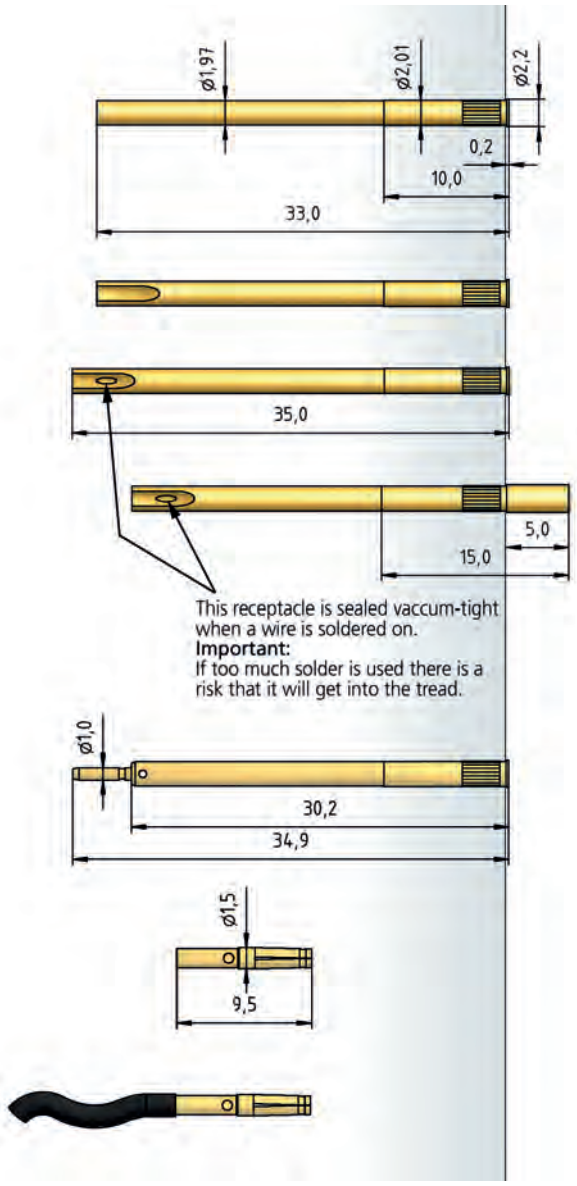


**H 1021/GR-C**

**H 1021/GR-L**

**H 1021/GRV-L**

**H 1021/5GRV-L**

**H 1021/GR-ST1.0**

**ST 1015-C1.0**

**ST 1015-C1.0-V800-BK**

08

L'IMPULSION Retrouvez nous sur www.limpulsion.fr

# Receptacles 1060/G

Receptacles for Series
1060/G · 1060/G for Position Test · 1060/GT for Position Test · 1061/G

| RECOMMENDED DIAMETER OF DRILL | |
|---|---|
| HP 2361.1 (Trolitax) | 3.00 mm |
| HGW 2372 (Glass filled material) | 3.01 mm |
| **MATERIALS** | |
| Receptacle | Brass, gold-plated |
| Stranded Wire AWG 20 (Black) | Copper, tin-plated, insulated |

**H 1060/G-L**

**H 1060/GR-L**

**H 1060/GRV-L**

**H 1060/GR-ST1.0**

**ST 1015-C1.0**

**ST 1015-C1.0-V800-BK**

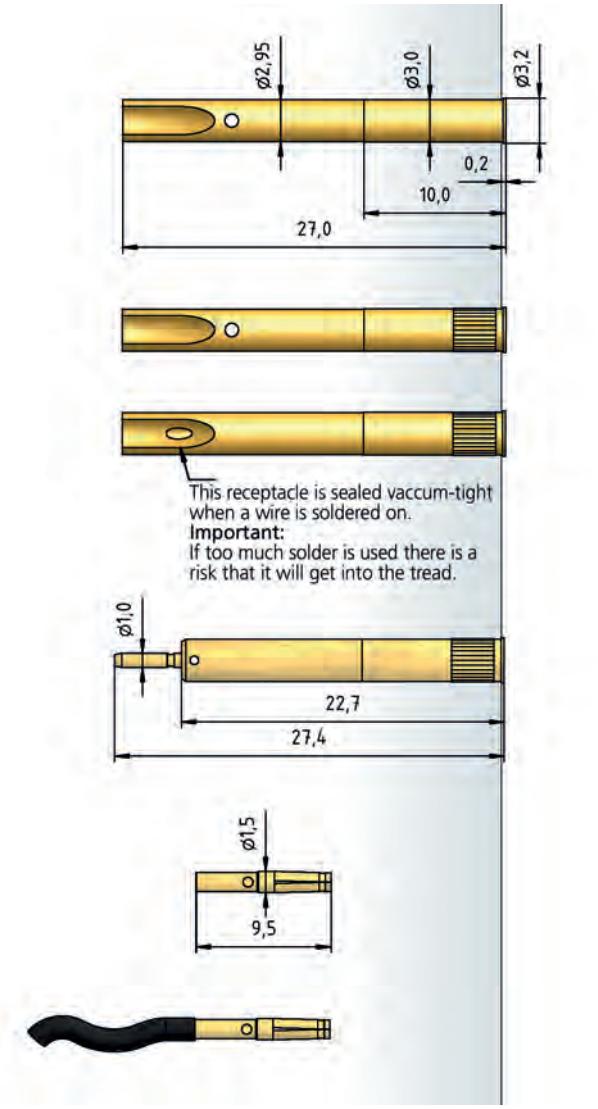


L'IMPULSION
Retrouvez nous sur
www.limpulsion.fr

# NON-ROTATING TEST PROBES

**Non-Rotating Test Probes are always used for the precisely-positioned contact-creation of a connector barrel.**

This is normally the case in the testing of flat connectors, as used for example in fuse holders. Contacting then takes place with rectangular so-called spade-shaped tip styles.

Two construction principles are mainly used in order to fix the test probe in position. The purpose of these principles is to create a compulsory guide for the plunger in the test probe barrel. In the simple design, the plunger is guided in the barrel by means of a bolt-groove system. The test probe must be inserted into the receptacle in exactly the right position. If maintenance is needed, the newly-placed test probe must be repositioned.

It is easier to carry out the procedure with a plunger whose end is flattened and has a guide slot at the end of the receptacle. With this principle, the receptacle is placed in position only once. For every new assembly, the test probe is then always returned to the same position via the guide slot of the receptacle.

L'IMPULSION
Retrouvez nous sur
www.limpulsion.fr

| SERIES | CENTER | PAGE |
|---|---|---|
| 2053 | 100 mil / 2.54 mm | 118 |
| 1053 | 197 mil / 5.00 mm | 119 |
| 1021/GV | 100 mil / 2.54 mm | 120 |
| 1053/G | 160 mil / 4.00 mm | 121 |





L'IMPULSION Retrouvez nous sur www.limpulsion.fr

# Series 2053

Non-Rotating Test Probe 100 mil / 2.54 mm

| BENEFIT | |
|---|---|
| Anti-turn feature ensures forced guidance between plunger and barrel | |
| Knurled section on the barrel guarantees secure fit of the test probe | |
| **MECHANICAL DATA** | |
| Center | 2.54 mm / 100 mil |
| Temperature Range | -30 °C - +120 °C |
| Full Travel | 5.00 mm |
| Working Travel | 4.00 mm |
| Pre-Loaded Spring Force | 0.45/ 0.60/ 1.00 N |
| Spring Force at Working Travel | 1.50/ 3.00/ 5.00 N |
| **ELECTRICAL DATA** | |
| Max. Current Rating | 5.0...8.0 A |
| Typical Continuity Resistance | ≤ 30 mOhm |
| **MATERIALS** | |
| Barrel | Brass, gold-plated |
| Spring | Spring Steel, gold-plated |
| Plunger | Steel |
| Receptacle | Brass, gold-plated |
| **RECOMMENDED DIAMETER OF DRILL** | |
| HP 2361.1 (Trolitax) | 1.98...2.00 mm |
| HGW 2372 | 1.98...2.00 mm |

**TIP STYLE · DIAMETER · PLATING**

| 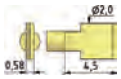 | 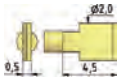 |  |  |  |
|---|---|---|---|---|
| **Y1** | **Y21** | **Y1F** | **Y1F** | **Y1F** |
| 2.00 x 0.58 Au | 2.00 x 0.50 Au | 1.50 x 0.50 x 2.00 Au | 1.50 x 0.58 x 2.00 Au | 1.50 x 0.58 x 2.80 Au |
|  | 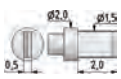 | 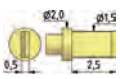 | 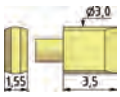 | 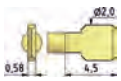 |
| **Y1F1** | **Y2F** | **Y3F** | **Y6** | **Y11** |
| 1.50 x 0.58 x 2.80 x 2.00 Au | 1.50 x 0.50 x 2.00 Rh | 1.50 x 0.50 x 2.50 Au | 3.00 x 1.55 Au | 2.00 x 0.58 Au |
| 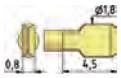 | 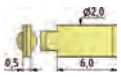 | | | |
| **Y12** | **Y21R** | | | |
| 1.80 x 0.80 Au | 2.00 x 0.50 Au | | | |

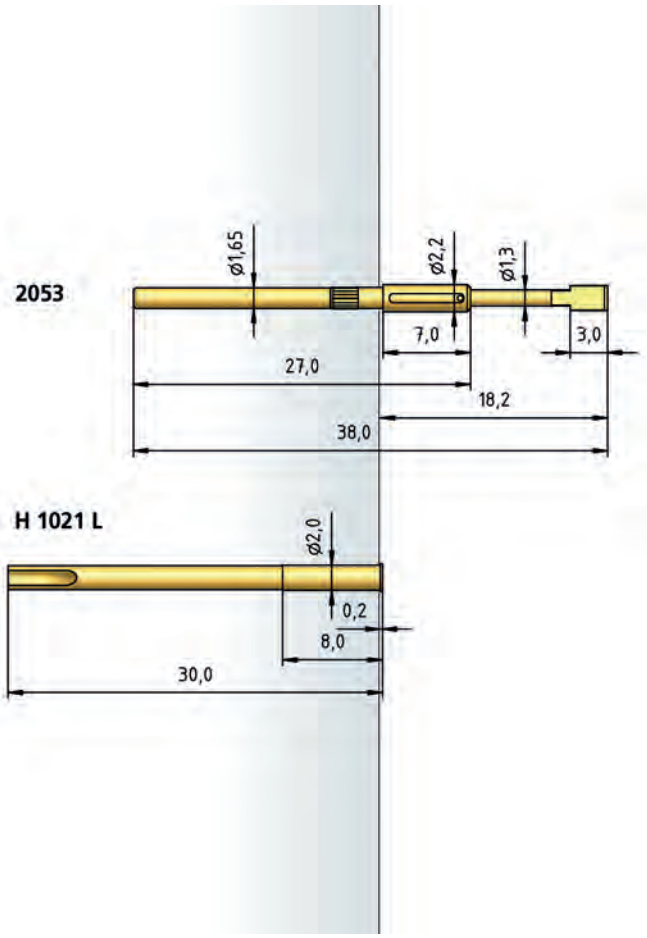


## HOW TO ORDER

| 2053 | - | Y1 | - | 1.5 N | - | Au | - | 2.0x | 0.58 |
|---|---|---|---|---|---|---|---|---|---|
| 1 | | 2 | | 3 | | 4 | | 5 | 6 |

1 Series 2 Tip Style 3 Spring Force 4 Tip Plating 5 Tip Diameter 6 Tip Thickness

# Non-Rotating Test Probe 160 mil / 4.0 mm

# Series 1053

## TIP STYLE · DIAMETER · PLATING



| CY | Y | Y4 | Y3 | Y5 |
|---|---|---|---|---|
| 6.00x3.00C Au | 5.00x1.00C Au<br>5.00x1.00C Ni | 4.00x1.00C Ni | 5.00x0.50C Ni | 4.00x0.65C Ni |

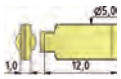

| Y8 | Y10 | Y11 | Y14 | Y15 |
|---|---|---|---|---|
| 5.00x1.00C Au | 3.00x0.80C Ni | 2.25x0.65C Ni | 3.80x0.40C Ni | 4.50x1.00C Au |

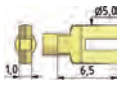

| Y16 |
|---|
| 5.00x1.00C Au |

## BENEFIT

Anti-turn feature ensures forced guidance between plunger and barrel

Knurled section on the barrel guarantees secure fit of the test probe

## MECHANICAL DATA

| | |
|---|---|
| Center | 4.00 mm / 160 mil |
| Temperature Range | -30 °C - +120 °C |
| Full Travel | 5.00 mm |
| Working Travel | 4.00 mm |
| Pre-Loaded Spring Force | 0.50/ 0.80/ 1.25 N |
| Spring Force at Working Travel | 1.50/ 3.00/ 5.00 N |

## ELECTRICAL DATA

| | |
|---|---|
| Max. Current Rating | 8.0 A |
| Typical Continuity Resistance | ≤ 30 mOhm |

## MATERIALS

| | |
|---|---|
| Barrel | Brass, gold-plated |
| Spring | Spring Steel, Stainless Steel, gold-plated |
| Plunger | CuBe |
| Receptacle | Brass, gold-plated |

## RECOMMENDED DIAMETER OF DRILL

| | |
|---|---|
| HP 2361.1 (Trolitax) | 3.00 mm |
| HGW 2372 | 3.00 mm |

## HIGH-TEMPERATURE APPLICATIONS

| | |
|---|---|
| Temperature Range | -40 °C - +250 °C |
| Pre-Loaded Spring Force | 0.50 N |
| Spring Force at Working Travel (Order Index E) | 1.50 N |

09

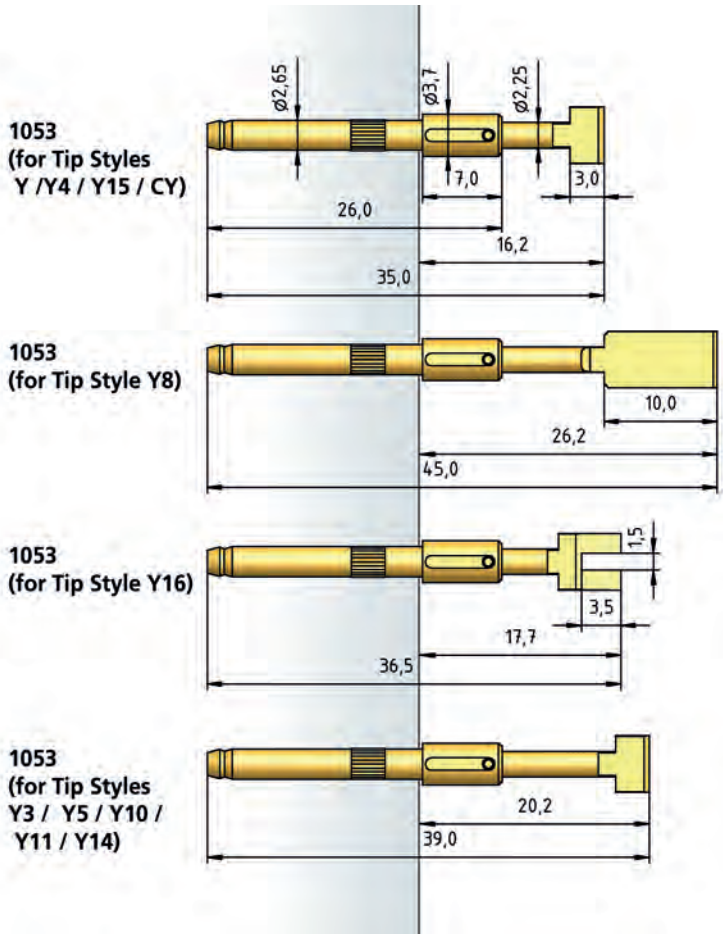


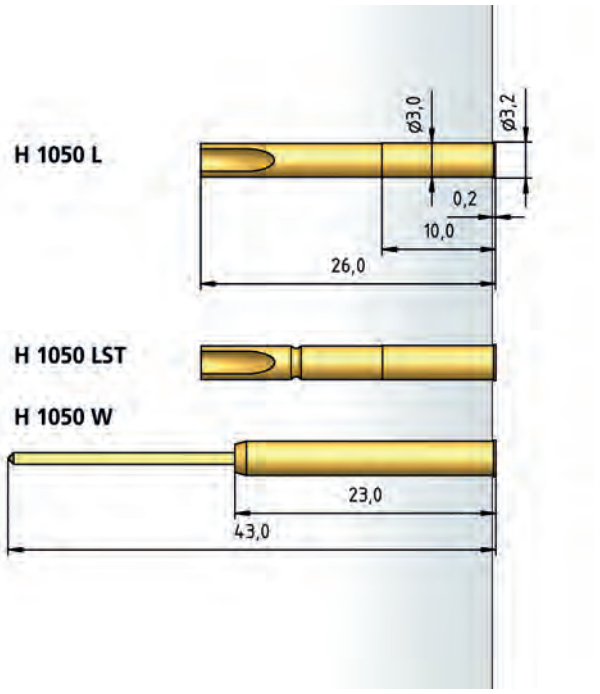


## HOW TO ORDER

| 1053 | - | Y | - | 1.5 N | E | - | Ni | - | 5.0x | 1.0 | C |
|---|---|---|---|---|---|---|---|---|---|---|---|
| 1 | | 2 | | 3 | 4 | | 5 | | 6 | 7 | 8 |

1 Series 2 Tip Style 3 Spring Force 4 High Temperature 5 Tip Plating
6 Tip Diameter 7 Tip Thickness 8 Tip Material (only for CuBe)

L'IMPULSION
Retrouvez nous sur
www.limpulsion.fr

# Series 1021/GV

Non-Rotating Test Probe 100 mil / 2.54 mm

| BENEFIT | |
|---|---|
| Anti-turn feature ensured by the square section on the plunger and the slot in the receptacle | |
| Forced guidance of the test probe ensures that the receptacle must only be aligned once | |
| **MECHANICAL DATA** | |
| Center | 2.54 mm / 100 mil |
| Temperature Range | -30 °C - +120 °C |
| Full Travel | 5.30 mm (Y4-4.30 mm / Y14-4.15 mm) |
| Working Travel | 4.00 mm |
| Pre-Loaded Spring Force | 0.30/ 1.00 N |
| Spring Force at Working Travel | 1.50/ 3.00 N |
| **ELECTRICAL DATA** | |
| Max. Current Rating | 5.0...8.0 A |
| Typical Continuity Resistance | ≤ 25 mOhm |
| **MATERIALS** | |
| Barrel | Brass, gold-plated |
| Spring | Spring Steel, gold-plated |
| Plunger | Steel, gold-plated |
| Receptacle | Brass, gold-plated |
| **RECOMMENDED DIAMETER OF DRILL** | |
| HP 2361.1 (Trolitax) | 2.00 mm |
| HGW 2372 | 2.03 mm |
| **AVAILABLE SCREW TOOLS** | |
| **Article Designation** | **max. Tip-∅** |
| WFSB 1021/G-2.54-1.8 | 1.8 |
| WFSB 1021/G-2.54-2.0 | 2.0 |
| WFSB 1021/G-3.5-3.0-Z | 3.0 |
| WFSB 1021/G-C2S-3.0-2.5-Z | 2.5 |

## TIP STYLE · DIAMETER · PLATING

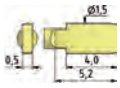

**Y4**
1.50x0.50 Au

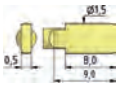

**Y442**
1.5x0.50 Au

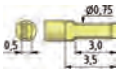

**Y**
0.75x0.50 Au

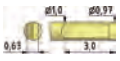

**Y**
0.97/1.00 x 0.63 Au



**Y1**
0.97/1.00 x 0.63 Au

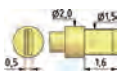

**Y1F**
1.50 x 0.50 x 2.00 Au

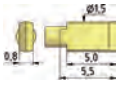

**Y5**
1.50 x 0.80 Au

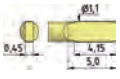

**Y14**
1.10 x 0.45 Au

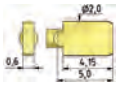

**Y14**
2.00 x 0.60 Au

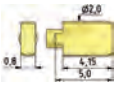

**Y14**
2.00 x 0.80 Au

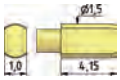

**Y14**
1.50 x 1.00 Au

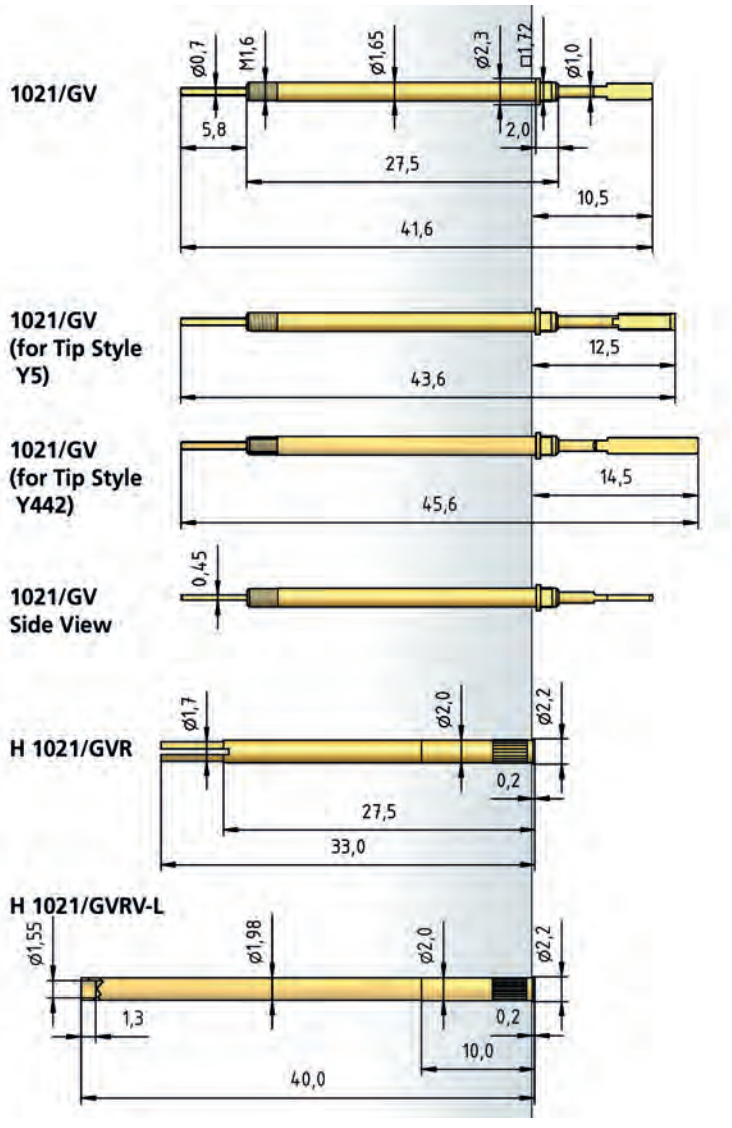


## HOW TO ORDER

| 1021/ | G | V | - | Y4 | - | 1.5 | N | - | Au | - | 1.5 | x0.5 | C |
|---|---|---|---|---|---|---|---|---|---|---|---|---|---|
| 1 | 2 | 3 | | 4 | | 5 | | | 6 | | 7 | 8 | 9 |

1 Series 2 Threaded Design 3 Non-roating Design 4 Tip Style 5 Spring Force 6 Tip Plating 7 Tip Diameter 8 Tip Thickness 9 Tip Material (only for CuBe)

L'IMPULSION
Retrouvez nous sur
www.limpulsion.fr

Non-Rotating Test Probe 160 mil / 4.0 mm

# Series 1053/G

## TIP STYLE · DIAMETER · PLATING

| 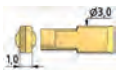 | 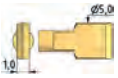 | 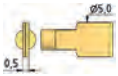 |  | 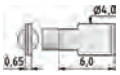 |
|---|---|---|---|---|
| **Y** | **Y** | **Y3** | **Y4** | **Y5** |
| 3.00x1.00C Au | 5.00x1.00C Au | 5.00x0.50C Au | 4.00x1.00C Au | 4.00x0.65C Ni |

|  | 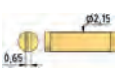 |  |
|---|---|---|
| **Y8** | **Y11** | **Y15** |
| 5.00x0.70C Au | 2.15x0.65C Au | 3.00x0.70C Au |

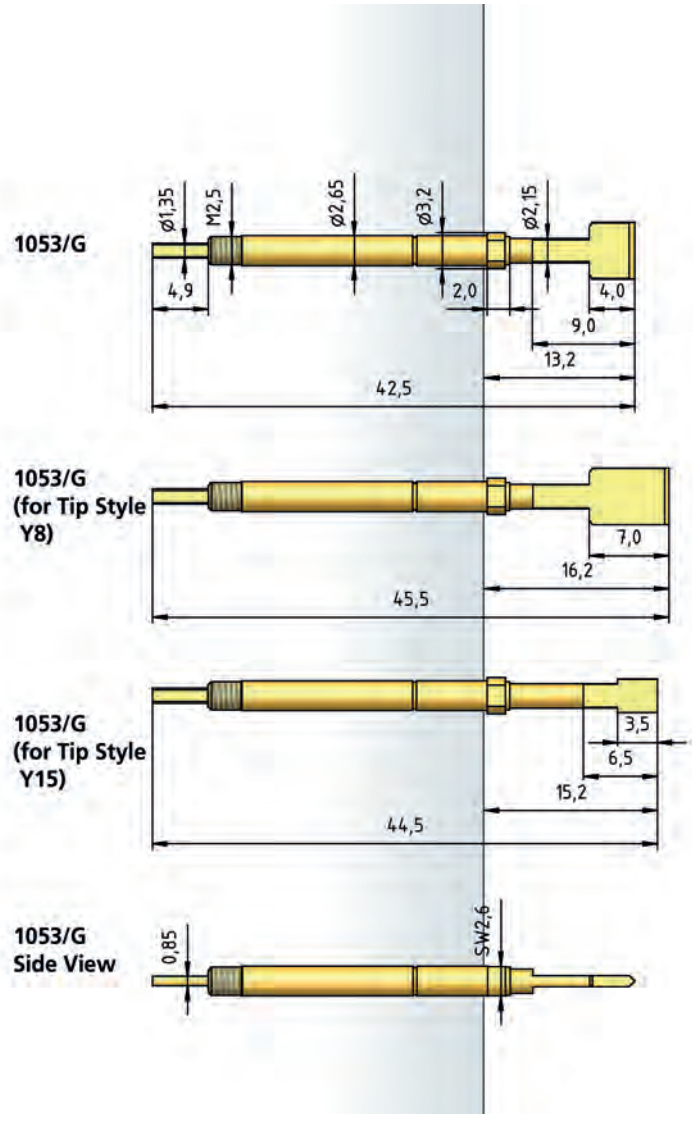


## BENEFIT

Anti-turn feature ensured by the square section on the plunger and the slot in the receptacle

Forced guidance of the test probe ensures that the receptacle must only be aligned once

## MECHANICAL DATA

| | |
|---|---|
| Center | 4.00 mm / 160 mil |
| Temperature Range | -30 °C - +120 °C |
| Full Travel | 5.00 mm |
| Working Travel | 4.00 mm |
| Switching Travel (with Switching Element) | 2.50 mm |
| Pre-Loaded Spring Force | 0.30/ 0.40/ 0.50/ 0.80/ 0.80/ 1.00 N |
| Spring Force at Working Travel | 0.50/ 1.50/ 2.00/ 3.00/ 4.00/ 5.00 N |
| Spring Force at Working Travel (with Switching Element) | +1.00 N |

## ELECTRICAL DATA

| | |
|---|---|
| **Receptacle-Plunger** | |
| Max. Current Rating | 5.0 A |
| Typical Continuity Resistance | ≤ 15 mOhm |
| **Pin-Plunger** | |
| Max. Current Rating | 1.0 A |
| Typical Continuity Resistance | ≤ 50 mOhm |

## MATERIALS

| | |
|---|---|
| Barrel | Brass, gold-plated |
| Spring | Spring Steel, gold-plated |
| Plunger | CuBe |
| Receptacle | Brass, gold-plated |

## RECOMMENDED DIAMETER OF DRILL

| | |
|---|---|
| HP 2361.1 (Trolitax) | 3.01 mm |
| HGW 2372 | 3.03 mm |

## AVAILABLE SCREW TOOLS

| **Article Designation** | **max. Tip-∅** |
|---|---|
| WFSB 1053/G-5.0-4.0-Z | 4.0 |
| WFSB 1053/G-6.0-5.0-Z | 5.0 |

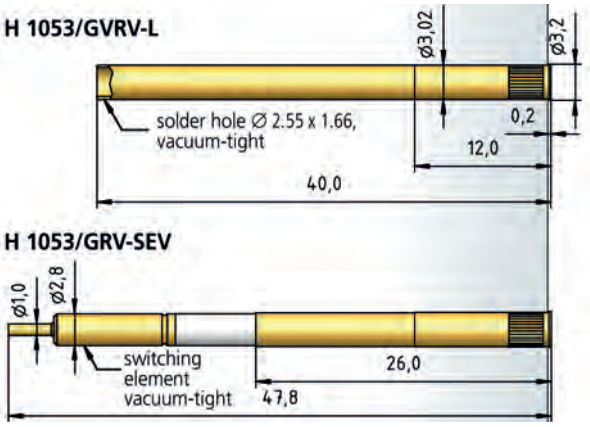


## HOW TO ORDER

| 1053/ | G | - | Y4 | - | 1.5 N | - | Au | - | 4.0x | 0.65 | C |
|---|---|---|---|---|---|---|---|---|---|---|---|
| 1 | 2 | | 3 | | 4 | | 5 | | 6 | 7 | 8 |

1 Series 2 Threaded Design 3 Tip Style 4 Spring Force 5 Tip Plating
6 Tip Diameter 7 Tip Thickness 8 Tip Material (only for CuBe)

09

# SWITCHING TEST PROBES
## WITHOUT THREAD

**Switching Test Probes are primarily used for component checks. To do this, the electric circuit used for signal transfer opens or closes according to a defined switching travel.**

For operation, a connection on the receptacle and on the connector pin is normally required. For maintenance work, the use of easy replacement receptacles can save a lot of time because there is no need for rewiring of the connector pin (see page 134). Thanks to our high-precision manufacturing processes, centers of from 4.00 mm to 1.91 mm can be achieved.

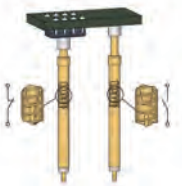

### Component Check with Switching Test Probes

As a rule, PTR HARTMANN Switching Test Probes operate on the "closer principle". Switching Test Probes can be seen as "axial micro-switches" which, according to a defined switching travel, create an electrically conducting connection between the inner conductor and the outer probe of the Switching Test Probe. "Opener" contacts (NC) are also available for the 3010/2F (see page 130) and 3011/2FGS (see page 145) series.

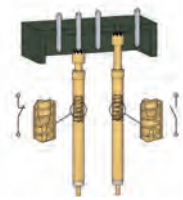

In addition to a large number of metal tips, PTR HARTMANN also offers versions with insulated tips. These can be supplied as a full-plastic tip and, for improved wear resistance, as a metal tip insulated against the plunger. PTR HARTMANN also offers a so-called "neutral Switching Test Probe" in the version with a plastic tip and hard-wearing protective metal ring.

### Applications / Features

- Check on presence of components or connectors, principally for the cable test, e.g. to check secondary locking
- Potential-free contacting by means of the above-mentioned insulating tip versions

L'IMPULSION Retrouvez nous sur www.limpulsion.fr

| SERIES | CENTER | PAGE |
|---|---|---|
| 3035 | 75 mil / 1.91 mm | 124 |
| 3020/2 | 100 mil / 2.54 mm | 125 |
| 3026/2W | 100 mil / 2.54 mm | 126 |
| 3030 | 100 mil / 2.54 mm | 127 |
| 3003 | 125 mil / 3.18 mm | 128 |
| 3010/2 · 3010/10 | 160 mil / 4.00 mm | 129 |
| 3010/2F | 160 mil / 4.00 mm | 130 |
| 3010/2W | 160 mil / 4.00 mm | 131 |
| 3010/2V | 160 mil / 4.00 mm | 132 |
| 3015.06 | 256 mil / 6.50 mm | 133 |






L'IMPULSION Retrouvez nous sur www.limpulsion.fr

# Series 3035

## Switching Test Probe „Closer“ (NO) 75 mil / 1.91 mm

| BENEFIT |
|---|
| Switching test probe for the cable harness test and presence verification |
| Available with thread (see page 136) |
| Switching test probe „Closer“ (NO) type |
| Switching test probe for small center |
| High soldering temperature up to 300°C |

| MECHANICAL DATA | |
|---|---|
| Center | 1.91 mm / 75 mil |
| Temperature Range | -30 °C - +120 °C |
| Full Travel | 5.00 mm |
| Working Travel | 4.00 mm |
| Switching Travel | 2.60 mm |
| Pre-Loaded Spring Force | 0.30 N |
| Spring Force at Working Travel | 2.00 N |
| Spring Force at Switching Travel | 1.10 N |

| ELECTRICAL DATA | |
|---|---|
| Max. Current Rating | 1.0 A |
| Typical Continuity Resistance | ≤ 20 mOhm |
| Typical Insulating Voltage | 1000 V |

| MATERIALS | |
|---|---|
| Barrel | Bronze, gold-plated |
| Spring | Spring Steel, gold-plated |
| Plunger | CuBe, gold-plated |
| Receptacle | Bronze, gold-plated |

| RECOMMENDED DIAMETER OF DRILL | |
|---|---|
| HP 2361.1 (Trolitax) | 1.30 mm |
| with pressed-in Ring | 1.36 mm |
| HGW 2372 (Glass filled material) | 1.32 mm |
| with pressed-in Ring | 1.37 mm |

### TIP STYLE · DIAMETER · PLATING



| C | D | F | F |
|---|---|---|---|
| 0.80C Au | 0.65C Au | 0.65C Au | 0.80C Au |

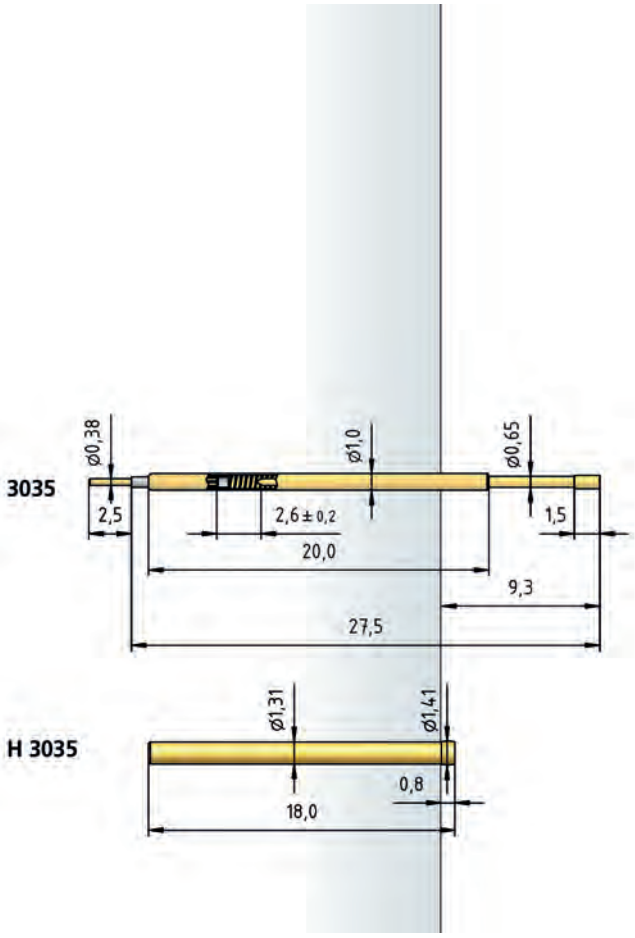


### HOW TO ORDER

| 3035 | - | F | - | 2.0 N | - | Au | - | 0.8 | C |
|---|---|---|---|---|---|---|---|---|---|
| 1 | | 2 | | 3 | | 4 | | 5 | 6 |

1 Series 2 Tip Style 3 Spring Force 4 Tip Plating 5 Tip Diameter
6 Tip Material (only for CuBe)

L'IMPULSION Retrouvez nous sur www.limpulsion.fr

# Switching Test Probe „Closer“ (NO) 100 mil / 2.54 mm

# Series 3020/2

## TIP STYLE · DIAMETER · PLATING



| A | C | C3 | F | F |
|---|---|---|---|---|
| 1.50 Au | 1.30 Au<br>1.50 Au<br>3.00 Au | 1.50 Au | 0.80 Au | 1.00 Au<br>1.30 Au<br>1.50 Au |



| F1 |
|---|
| 1.50 HTK |

## BENEFIT

- Switching test probe for the cable harness test and presence verification
- Available with thread (see page 137)
- Switching test probe „Closer“ (NO) type
- Switching travel 4.0 mm on request
- High soldering temperature up to 300°C

## MECHANICAL DATA

| | |
|---|---|
| Center | 2.54 mm / 100 mil |
| Temperature Range | -30 °C - +120 °C |
| Full Travel | 5.30 mm |
| Working Travel | 4.00 mm |
| Switching Travel | 2.60 mm |
| Pre-Loaded Spring Force | 0.15/ 0.40/ 0.50/ 1.70 N |
| Spring Force at Working Travel | 0.80/ 1.50/ 3.00/ 6.50 N |
| Spring Force at Switching Travel | 0.25/ 0.80/ 1.80/ 4.50 N |

## ELECTRICAL DATA

| | |
|---|---|
| **Receptacle-Plunger** | |
| Max. Current Rating | 3.0 A |
| Typical Continuity Resistance | ≤ 20 mOhm |
| **Pin-Plunger** | |
| Max. Current Rating | 1.0 A |
| Typical Continuity Resistance | ≤ 50 mOhm |
| Typical Insulating Voltage | 1000 V |

## MATERIALS

| | |
|---|---|
| Barrel | Brass, gold-plated |
| Spring | Spring Steel, gold-plated |
| Plunger | Steel |
| Receptacle | Brass, gold-plated |

## RECOMMENDED DIAMETER OF DRILL

| | |
|---|---|
| HP 2361.1 (Trolitax) | 2.00 mm |
| HGW 2372 (Glass filled material) | 2.01 mm |

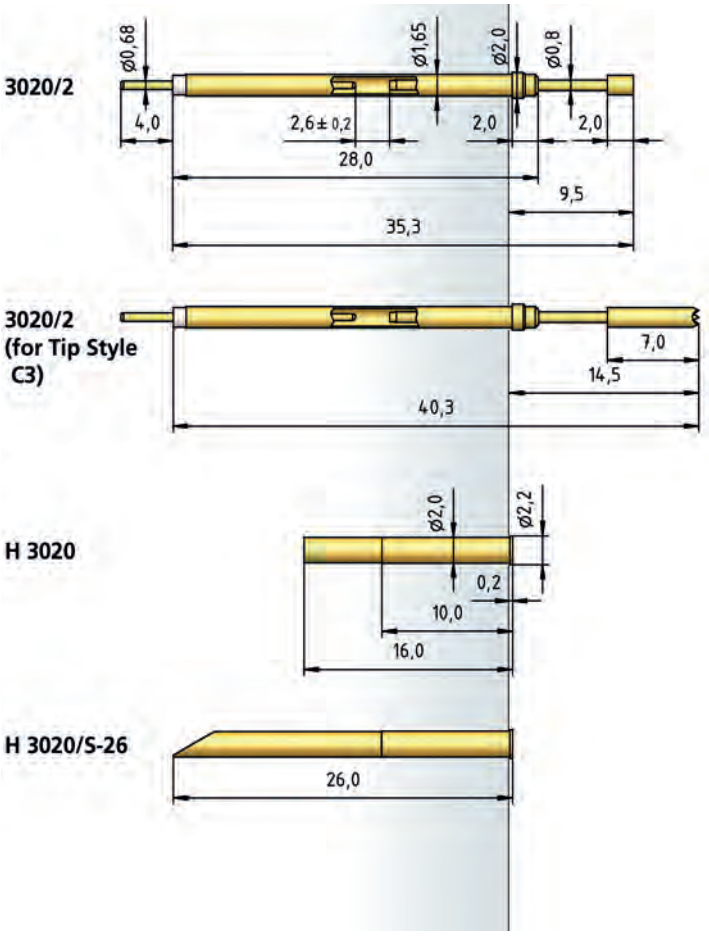


## HOW TO ORDER

| 3020/ | 2 | - | F | - | 1.5 N | - | Au | - | 1.5 |
|---|---|---|---|---|---|---|---|---|---|
| 1 | 2 | | 3 | | 4 | | 5 | | 6 |

1 Series 2 Collar Height 3 Tip Style 4 Spring Force 5 Tip Plating 6 Tip Diameter



L'IMPULSION Retrouvez nous sur www.limpulsion.fr

# Series 3026/2W

Switching Test Probe „Closer“ (NO) with Easy-Replacement System
100 mil / 2.54 mm

| BENEFIT |
|---|
| Switching test probe for the cable harness test and presence verification |
| Easy-replacement system (replacement without soldering) |
| Switching test probe „Closer“ (NO) type |
| High soldering temperature up to 300°C |

| MECHANICAL DATA | |
|---|---|
| Center | 2.54 mm / 100 mil |
| Temperature Range | -30 °C - +120 °C |
| Full Travel | 5.00 mm |
| Working Travel | 4.00 mm |
| Switching Travel | 1.50 mm |
| Pre-Loaded Spring Force | 0.15/ 0.40/ 0.50/ 1.70 N |
| Spring Force at Working Travel | 0.80/ 1.50/ 3.00/ 6.50 N |
| Spring Force at Switching Travel | 0.20/ 0.60/ 1.25/ 3.30 N |

| ELECTRICAL DATA | |
|---|---|
| **Receptacle-Plunger** | |
| Max. Current Rating | 3.0 A |
| Typical Continuity Resistance | ≤ 20 mOhm |
| **Pin-Plunger** | |
| Max. Current Rating | 1.0 A |
| Typical Continuity Resistance | ≤ 50 mOhm |
| Typical Insulating Voltage | 1000 V |

| MATERIALS | |
|---|---|
| Barrel | Brass, gold-plated |
| Spring | Spring Steel, gold-plated |
| Plunger | CuBe, gold-plated |
| Receptacle | Brass, gold-plated |

| RECOMMENDED DIAMETER OF DRILL | |
|---|---|
| HP 2361.1 (Trolitax) | 2.00 mm |
| HGW 2372 (Glass filled material) | 2.01 mm |

## TIP STYLE · DIAMETER · PLATING



| A | A6 | C | D | D1 |
|---|---|---|---|---|
| 1.80C Au | 1.80C Au | 1.80C Au | 1.00C Au | 0.64C Au<br>0.80C Au |



| F | F1 |
|---|---|
| 1.00C Au<br>1.80C Au | 1.80C HTK |

**3026/2W**

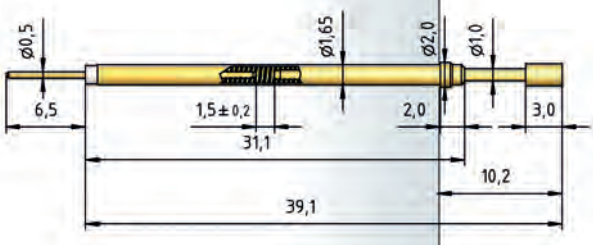


**H 3026/W**

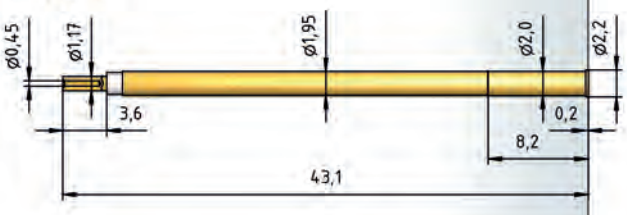


## HOW TO ORDER

| 3026/ | 2 | W | - | F | - | 1.5 N | - | Au | - | 1.8 |
|---|---|---|---|---|---|---|---|---|---|---|
| 1 | 2 | 3 | | 4 | | 5 | | 6 | | 7 |

1 Series 2 Collar Height 3 Interchangeable without Soldering 4 Tip Style
5 Spring Force 6 Tip Plating 7 Tip Diameter

L'IMPULSION
Retrouvez nous sur
www.limpulsion.fr

# Switching Test Probe „Closer“ (NO) 100 mil / 2.54 mm

# Series 3030

## TIP STYLE · DIAMETER · PLATING




| C | D | D1 | DL | F |
|---|---|---|---|---|
| 1.00 Au<br>1.30 Au | 0.65 Au | 0.61 Au | 0.65 Au | 1.00 Au |




| FL |
|---|
| 0.70 Au |

## BENEFIT

- Switching test probe for the cable harness test and presence verification
- Available with thread (see page 141)
- Switching test probe „Closer“ (NO) type
- High soldering temperature up to 300°C
- Thin switching test probe

## MECHANICAL DATA

| | |
|---|---|
| Center | 2.54 mm / 100 mil |
| Temperature Range | -30 °C - +120 °C |
| Full Travel | 6.30 mm (5.80 mm bei 3030-L) |
| Working Travel | 5.00 mm |
| Switching Travel | 4.00 mm |
| Pre-Loaded Spring Force | 0.25/ 0.25/ 0.30 N |
| Spring Force at Working Travel | 1.00/ 1.50/ 2.00 N |
| Spring Force at Switching Travel | 0.60/ 0.60/ 1.00 N |

## ELECTRICAL DATA

| | |
|---|---|
| Max. Current Rating | 1.0 A |
| Typical Continuity Resistance | ≤ 50 mOhm |
| Typical Insulating Voltage | 1000 V |

## MATERIALS

| | |
|---|---|
| Barrel | Bronze, gold-plated |
| Spring | Spring Steel, gold-plated |
| Plunger | Steel |
| Receptacle | Bronze, gold-plated |

## RECOMMENDED DIAMETER OF DRILL

| | |
|---|---|
| HP 2361.1 (Trolitax) | 1.65 mm |
| with pressed-in Ring | 1.75 mm |
| HGW 2372 (Glass filled material) | 1.67 mm |
| with pressed-in Ring | 1.76 mm |



**3030**

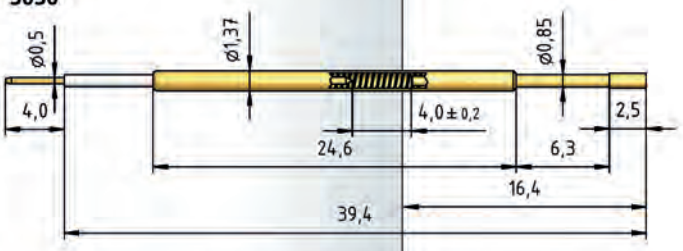


**3030 (for Tip Styles DL / FL)**

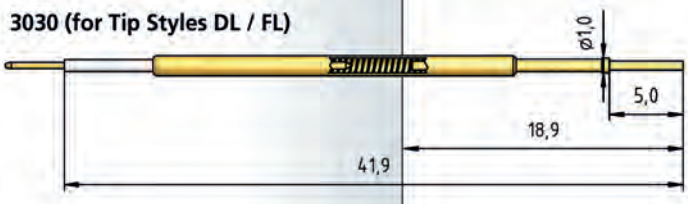


**H 1025 C**

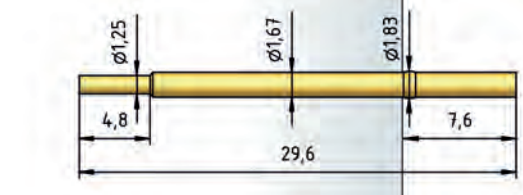


## HOW TO ORDER

| 3030 | - | C | - | 2.0 N | - | Au | - | 1.0/ | 0.5x | 4.0 |
|---|---|---|---|---|---|---|---|---|---|---|
| 1 | | 2 | | 3 | | 4 | | 5 | 6 | 7 |

1 Series 2 Tip Style 3 Spring Force 4 Tip Plating 5 Tip Diameter
6 Connector Pin Diameter 7 Connector Pin Length

L'IMPULSION Retrouvez nous sur www.limpulsion.fr

# Series 3003

## Switching Test Probe „Closer“ (NO) 125 mil / 3.18 mm

| BENEFIT |
|---|
| Use without receptacle |
| Defined stop due to  a press-in Ring at the barrel |
| Switching test probe „Closer“ (NO) type |
| High soldering temperature up to 300°C |

| MECHANICAL DATA | |
|---|---|
| Center | 3.18 mm / 125 mil |
| Temperature Range | -30 °C - +120 °C |
| Full Travel | 7.5 mm |
| Working Travel | 5.00 mm |
| Switching Travel | 0.65 mm |
| Pre-Loaded Spring Force | 0.40 N |
| Spring Force at Working Travel | 1.15 N |
| Spring Force at Switching Travel | 0.55 N |

| ELECTRICAL DATA | |
|---|---|
| Max. Current Rating | 4.5 A |
| Typical Continuity Resistance | ≤ 15 mOhm |
| Typical Insulating Voltage | 1000 V |

| MATERIALS | |
|---|---|
| Barrel | Bronze, gold-plated |
| Spring | Steel Wire, gold-plated |
| Plunger | CuBe, gold-plated |
| Connect Pin | CuBe, gold-plated |

| TIP STYLE · DIAMETER · PLATING |
|---|
|  |
| **F** |
| 1.02C Au |

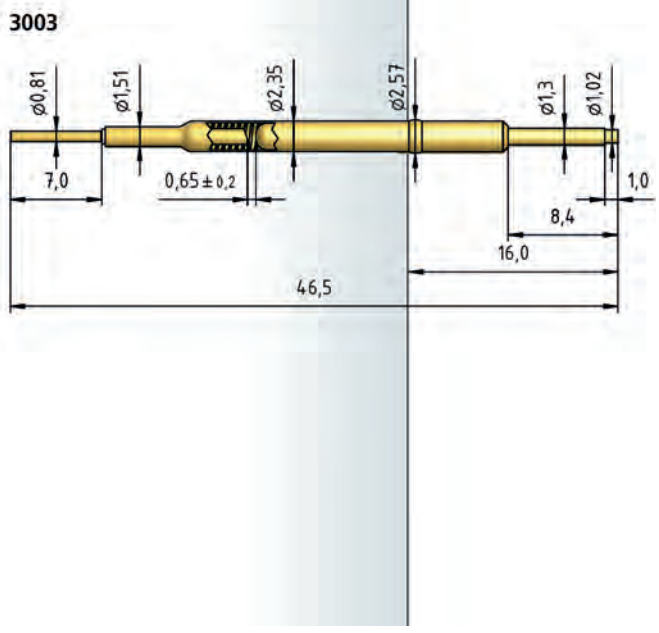


## HOW TO ORDER

| 3003 | - | F | - | 1.15 N | - | Au | - | 1.02 | C |
|---|---|---|---|---|---|---|---|---|---|
| 1 | | 2 | | 3 | | 4 | | 5 | 6 |

1 Series 2 Tip Style 3 Spring Force 4 Tip Plating 5 Tip Diameter
6 Tip Material (only for CuBe)

L'IMPULSION
Retrouvez nous sur
www.limpulsion.fr

# Switching Test Probe „Closer“ (NO) 160 mil / 4.0 mm

# Series 3010/2 • 3010/10

## TIP STYLE · DIAMETER · PLATING




| A | C | C | CL | C1 |
|---|---|---|---|---|
| 2.30 Au | 1.80 Au | 2.30 Au<br>3.00 Au<br>4.00 Au | 2.30 Au | 1.00 Au |

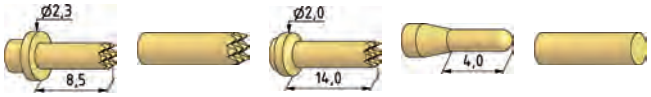


| CL1 | CL2 | CL3 | D6 | F |
|---|---|---|---|---|
| 1.00 Au | 1.80 Au | 1.00 Au | 1.00 Au | 1.80 Au |

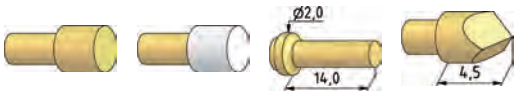


| F | F1 | FL3 | H2 |
|---|---|---|---|
| 2.00 Au<br>2.30 Au | 2.30 HTK<br>3.00 HTK<br>4.00 HTK<br>5.00 HTK | 1.00 Au | 2.60 Au |

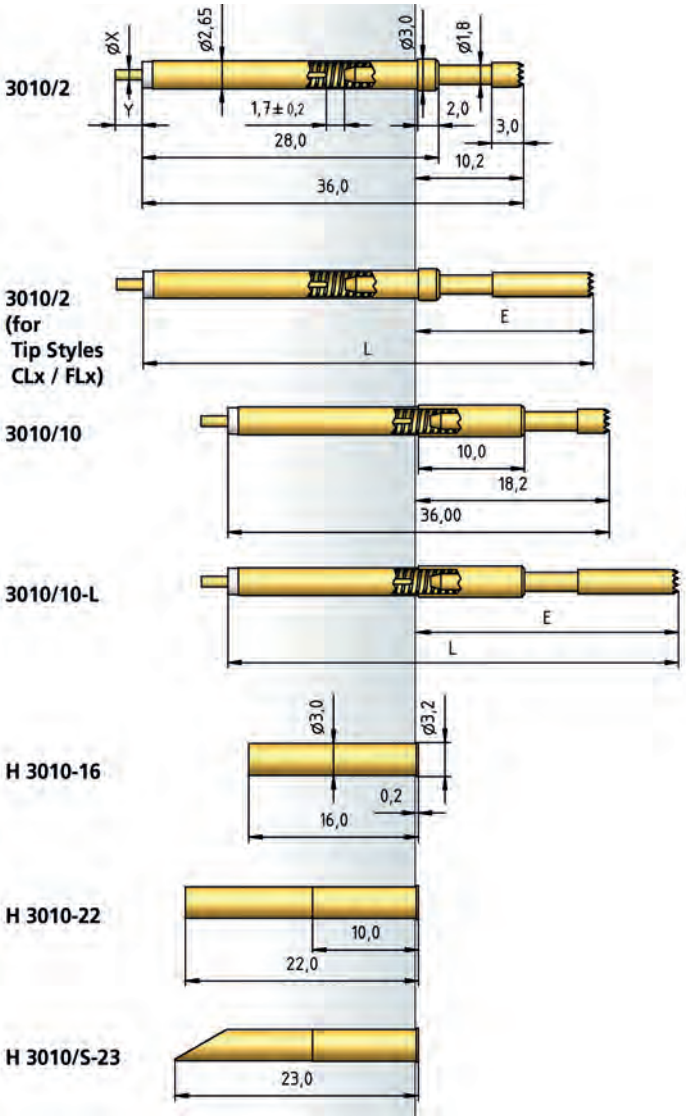


## BENEFIT

| |
|---|
| Switching test probe for the cable harness test and presence verification |
| Available with thread (see page 142) |
| Switching test probe „Closer“ (NO) type |
| Switching travel 4.0 mm on request |
| High soldering temperature up to 300°C |

## MECHANICAL DATA

| | |
|---|---|
| Center | 4.00 mm / 160 mil |
| Temperature Range | -30 °C - +120 °C |
| Full Travel | 5.00 mm |
| Working Travel | 4.00 mm |
| Switching Travel | 1.70 mm |
| Pre-Loaded Spring Force | 0.12/ 0.30/ 1.80/ 1.70/ 2.70/ 5.00 N |
| Spring Force at Working Travel | 1.25/ 2.30/ 7.00/ 9.00/ 10.00/ 13.00 N |
| Spring Force at Switching Travel | 0.18/ 0.70/ 3.60/ 4.40/ 5.40/ 8.00 N |

## ELECTRICAL DATA

| | |
|---|---|
| **Receptacle-Plunger** | |
| Max. Current Rating | 5.0 A |
| Typical Continuity Resistance | ≤ 15 mOhm |
| **Pin-Plunger** | |
| Max. Current Rating | 1.0 A |
| Typical Continuity Resistance | ≤ 50 mOhm |
| Typical Insulating Voltage | 1000 V |

## MATERIALS

| | |
|---|---|
| Barrel | Brass, gold-plated |
| Spring | Spring Steel, gold-plated |
| Plunger | Steel |
| Receptacle | Brass, gold-plated |

## RECOMMENDED DIAMETER OF DRILL

| | |
|---|---|
| HP 2361.1 (Trolitax) | 3.00 mm |
| HGW 2372 (Glass filled material) | 3.01 mm |

## TABLE CONNECTOR PIN

| Connector Pin ∅ X (mm) | Connector Pin Length Y (mm) |
|---|---|
| 0.5 | 6.0 |
| 1.0 | 2.5 |
| 1.0 | 4.0 |

## LENGTHS FOR TEST PROBE 3010/2 FOR TIP STYLES CLx / FLx

| Tip Style | E (mm) | L (mm) |
|---|---|---|
| CL, CL1 | 16.7 | 42.5 |
| CL2 | 22.2 | 48.0 |
| CL3, FL3 | 22.9 | 48.7 |

## LENGTHS FOR TEST PROBE 3010/10 FOR TIP STYLES CLx / FLx

| Tip Style | E (mm) | L (mm) |
|---|---|---|
| CL, CL1 | 24.7 | 42.5 |
| CL2 | 30.2 | 48.0 |
| CL3, FL3 | 30.9 | 48.7 |

## HOW TO ORDER

| 3010/ | 2 | - | A | - | 2.3 N | - | Au | - | 2.3 | /1.0x | 4.0 |
|---|---|---|---|---|---|---|---|---|---|---|---|
| 1 | 2 | | 3 | | 4 | | 5 | | 6 | 7 | 8 |

1 Series 2 Collar Height 3 Tip Style 4 Spring Force 5 Tip Plating
6 Tip Diameter 7 Connector Pin Diameter 8 Connector Pin Length

10

L'IMPULSION Retrouvez nous sur www.limpulsion.fr

# Series 3010/2F

## Switching Test Probe „Opener“ (NC) 160 mil / 4.0 mm

| BENEFIT | |
|---|---|
| Switching test probe for the cable harness test and presence verification | |
| Switching test probe "Opener" (NC) type | |
| High soldering temperature up to 300°C | |
| **MECHANICAL DATA** | |
| Center | 4.00 mm / 160 mil |
| Temperature Range | -30 °C - +120 °C |
| Full Travel | 5.00 mm |
| Working Travel | 4.00 mm |
| Switching Travel | 1.70 mm |
| Pre-Loaded Spring Force | 0.40 N |
| Spring Force at Working Travel | 2.30 N |
| Spring Force at Switching Travel | 1.00 N |
| **ELECTRICAL DATA** | |
| **Receptacle-Plunger** | |
| Max. Current Rating | 5.0 A |
| Typical Continuity Resistance | ≤ 15 mOhm |
| **Pin-Plunger** | |
| Max. Current Rating | 1.0 A |
| Typical Continuity Resistance | ≤ 50 mOhm |
| Typical Insulating Voltage | 1000 V |
| **MATERIALS** | |
| Barrel | Brass, gold-plated |
| Spring | Spring Steel, gold-plated |
| Plunger | Steel |
| Receptacle | Brass, gold-plated |
| **RECOMMENDED DIAMETER OF DRILL** | |
| HP 2361.1 (Trolitax) | 3.00 mm |
| HGW 2372 (Glass filled material) | 3.01 mm |

| TABLE CONNECTOR PIN | |
|---|---|
| **Connector Pin ∅ X (mm)** | **Connector Pin Length Y (mm)** |
| 0.5 | 6.0 |
| 1.0 | 2.5 |
| 1.0 | 4.0 |

**TIP STYLE · DIAMETER · PLATING**

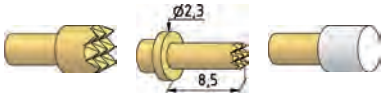


| C | CL1 | F1 |
|---|---|---|
| 2.30 Au | 1.00 Au | 3.00 HTK<br>4.00 HTK<br>5.00 HTK |

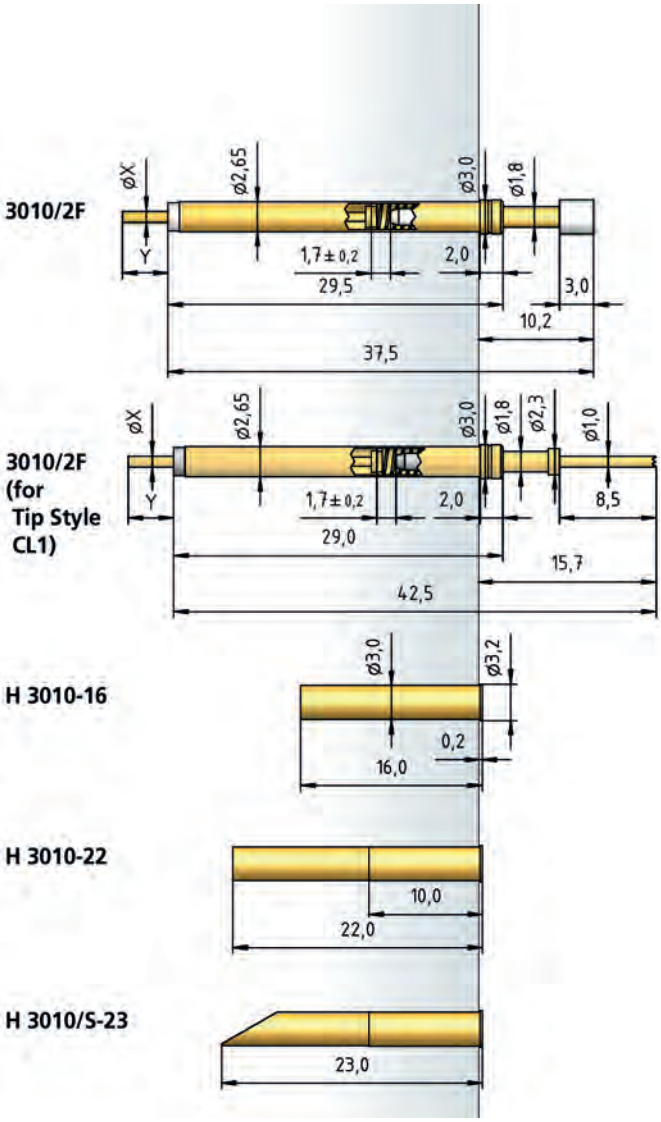


## HOW TO ORDER

| 3010/ | 2 | F | - | C | - | 2.3 N | - | Au | - | 2.3/ | 1.0x | 4.0 |
|---|---|---|---|---|---|---|---|---|---|---|---|---|
| 1 | 2 | 3 | | 4 | | 5 | | 6 | | 7 | 8 | 9 |

1 Series 2 Collar Height 3 Type Opener 4 Tip Style 5 Spring Force 6 Tip Plating
7 Tip Diameter 8 Connector Pin Diameter 9 Connector Pin Length

L'IMPULSION
Retrouvez nous sur
www.limpulsion.fr

# Switching Test Probe „Closer“ (NO) with Easy-Replacement System 160 mil / 4.0 mm

## Series 3010/2W

### TIP STYLE · DIAMETER · PLATING




| A | C | C | CL | C1 |
|---|---|---|---|---|
| 2.30 Au | 1.80 Au | 2.30 Au<br>3.00 Au<br>4.00 Au | 2.30 Au | 1.00 Au |

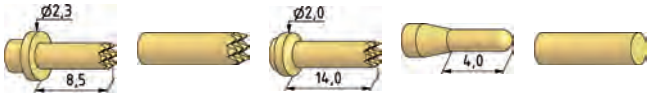


| CL1 | CL2 | CL3 | D6 | F |
|---|---|---|---|---|
| 1.00 Au | 1.80 Au | 1.00 Au | 1.00 Au | 1.80 Au |

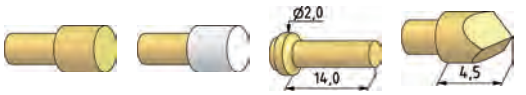


| F | F1 | FL3 | H2 |
|---|---|---|---|
| 2.00 Au<br>2.30 Au | 2.30 HTK<br>3.00 HTK<br>4.00 HTK<br>5.00 HTK | 1.00 Au | 2.60 Au |

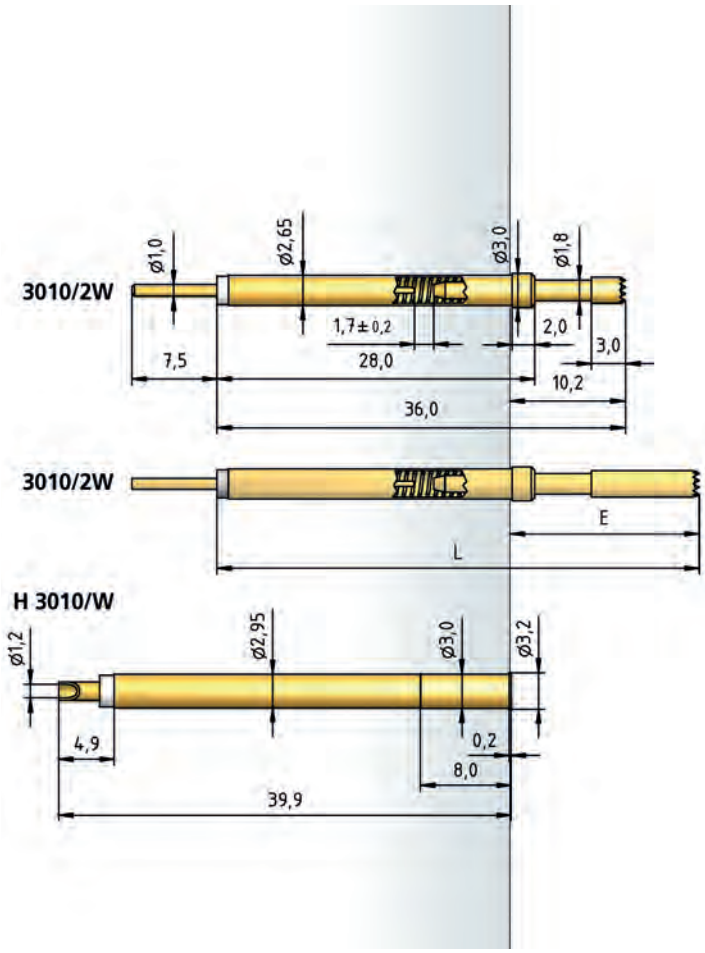


### BENEFIT

- Switching test probe for the cable harness test and presence verification
- Easy-replacement system (replacement without soldering)
- Available with thread (see page 143)
- Switching test probe „Closer“ (NO) type
- Switching travel 4.0 mm on request
- High soldering temperature up to 300°C

### MECHANICAL DATA

| | |
|---|---|
| Center | 4.00 mm / 160 mil |
| Temperature Range | -30 °C - +120 °C |
| Full Travel | 5.00 mm |
| Working Travel | 4.00 mm |
| Switching Travel | 1.70 mm |
| Pre-Loaded Spring Force | 0.12/ 0.25/ 0.30/ 0.40/ 0.60/ 1.80/ 1.40/ 1.70/ 2.00/ 2.00/ 5.00/ 4.00 N |
| Spring Force at Working Travel | 1.25/ 1.75/ 2.30/ 2.80/ 4.00/ 7.00/ 7.50/ 9.00/ 9.50/ 10.50/ 13.00/ 13.50 N |
| Spring Force at Switching Travel | 0.20/ 0.45/ 0.75/ 1.00/ 1.60/ 3.60/ 3.60/ 4.40/ 4.80/ 5.20/ 8.00/ 7.60 N |

### ELECTRICAL DATA

| | |
|---|---|
| **Receptacle-Plunger** | |
| Max. Current Rating | 5.0 A |
| Typical Continuity Resistance | ≤ 15 mOhm |
| **Pin-Plunger** | |
| Max. Current Rating | 1.0 A |
| Typical Continuity Resistance | ≤ 50 mOhm |
| Typical Insulating Voltage | 1000 V |

### MATERIALS

| | |
|---|---|
| Barrel | Brass, gold-plated |
| Spring | Spring Steel, gold-plated |
| Plunger | Steel |
| Receptacle | Brass, gold-plated |

### RECOMMENDED DIAMETER OF DRILL

| | |
|---|---|
| HP 2361.1 (Trolitax) | 3.00 mm |
| HGW 2372 (Glass filled material) | 3.01 mm |

### LENGTHS FOR TEST PROBE 3010/2W FOR TIP STYLES CLx / FLx

| Tip Style | E (mm) | L (mm) |
|---|---|---|
| CL, CL1 | 16.7 | 42.5 |
| CL2 | 22.2 | 48.0 |
| CL3, FL3 | 22.9 | 48.7 |

### HOW TO ORDER

| 3010/ | 2 | W | - | A | - | 2.3 N | - | Au | - | 2.3/ | 1.0x | 7.5 |
|---|---|---|---|---|---|---|---|---|---|---|---|---|
| 1 | 2 | 3 | | 4 | | 5 | | 6 | | 7 | 8 | 9 |

1 Series 2 Collar Height 3 Interchangeable without Soldering 4 Tip Style
5 Spring Force 6 Tip Plating 7 Tip Diameter 8 Connector Pin Diameter
9 Connector Pin Length



L'IMPULSION Retrouvez nous sur www.limpulsion.fr

# Series 3010/2V

## Switching Test Probe „Closer“ (NO) - Non-Rotating“ 160 mil / 4.0 mm

| BENEFIT | |
|---|---|
| Switching test probe for the cable harness test and presence verification | |
| Switching test probe „Closer“ (NO) type | |
| Non-rotating variant | |
| High soldering temperature up to 300°C | |
| **MECHANICAL DATA** | |
| Center | 4.00 mm / 160 mil |
| Temperature Range | -30 °C - +120 °C |
| Full Travel | 5.00 mm |
| Working Travel | 4.00 mm |
| Switching Travel | 1.70 mm |
| Pre-Loaded Spring Force | 0.12/ 0.30/ 1.80/ 1.70/ 2.70/ 5.00 N |
| Spring Force at Working Travel | 1.25/ 2.30/ 7.00/ 9.00/ 10.00/13.00 N |
| Spring Force at Switching Travel | 0.18/ 0.70/ 3.60/ 4.40/ 5.40/ 8.00 N |
| **ELECTRICAL DATA** | |
| **Receptacle-Plunger** | |
| Max. Current Rating | 5.0 A |
| Typical Continuity Resistance | ≤ 15 mOhm |
| **Pin-Plunger** | |
| Max. Current Rating | 1.0 A |
| Typical Continuity Resistance | ≤ 50 mOhm |
| Typical Insulating Voltage | 1000 V |
| **MATERIALS** | |
| Barrel | Brass, gold-plated |
| Spring | Spring Steel, gold-plated |
| Plunger | Steel |
| Receptacle | Brass, gold-plated |
| **RECOMMENDED DIAMETER OF DRILL** | |
| HP 2361.1 (Trolitax) | 3.00 mm |
| HGW 2372 (Glass filled material) | 3.01 mm |

**TABLE CONNECTOR PIN**

| Connector Pin ∅ X (mm) | Connector Pin Length Y (mm) |
|---|---|
| 0.5 | 6.0 |
| 1.0 | 2.5 |
| 1.0 | 4.0 |

**TIP STYLE · DIAMETER · PLATING**




| Y | Y5 |
|---|---|
| 1.90 x 1.00 Au | 4.00 x 0.65 Au |

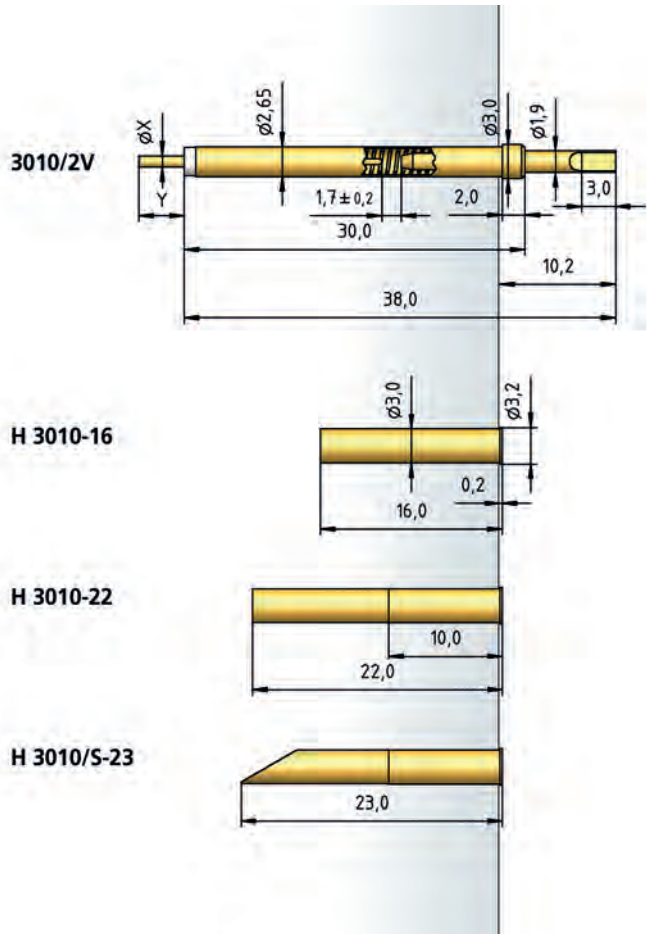


## HOW TO ORDER

| 3010/ | 2 | V | - | Y | - | 2.3 N | - | Au | - | 1.9x | 1.0 | /1.0x | 4.0 |
|---|---|---|---|---|---|---|---|---|---|---|---|---|---|
| 1 | 2 | 3 | | 4 | | 5 | | 6 | | 7 | 8 | 9 | 10 |

1 Series 2 Collar Height 3 Non-roating Design 4 Tip Style 5 Spring Force
6 Tip Plating 7 Tip Diameter 8 Tip Thickness 9 Connector Pin Diameter
10 Connector Pin Length

L'IMPULSION Retrouvez nous sur www.limpulsion.fr

# Ball-Head Switching Test Probe „Closer“ (NO) 256 mil / 6.5 mm

## Series 3015.06

### TIP STYLE · DIAMETER · PLATING



| D |
|---|
| 5.00 Ni |

| BENEFIT | |
|---|---|
| Ball-head switching test probe for presence detection with side activation | |
| Precision ball plunger guide | |
| Switching test probe „Closer“ (NO) type | |
| Outer housing neutral (insulated of the electrical circuit) | |
| **MECHANICAL DATA** | |
| Center | 6.50 mm / 256 mil |
| Temperature Range | -30 °C - +120 °C |
| Full Travel | 1.40 mm |
| Working Travel | 1.20 mm |
| Switching Travel | 0.80 mm |
| Pre-Loaded Spring Force | 0.50 N |
| Spring Force at Working Travel | 0.80 N |
| Spring Force at Switching Travel | 0.70 N |
| **ELECTRICAL DATA** | |
| Max. Current Rating | 1.0 A |
| Typical Continuity Resistance | ≤ 25 mOhm |
| **MATERIALS** | |
| Barrel | Brass, gold-plated |
| Spring | Spring Steel, gold-plated |
| Plunger | Steel |



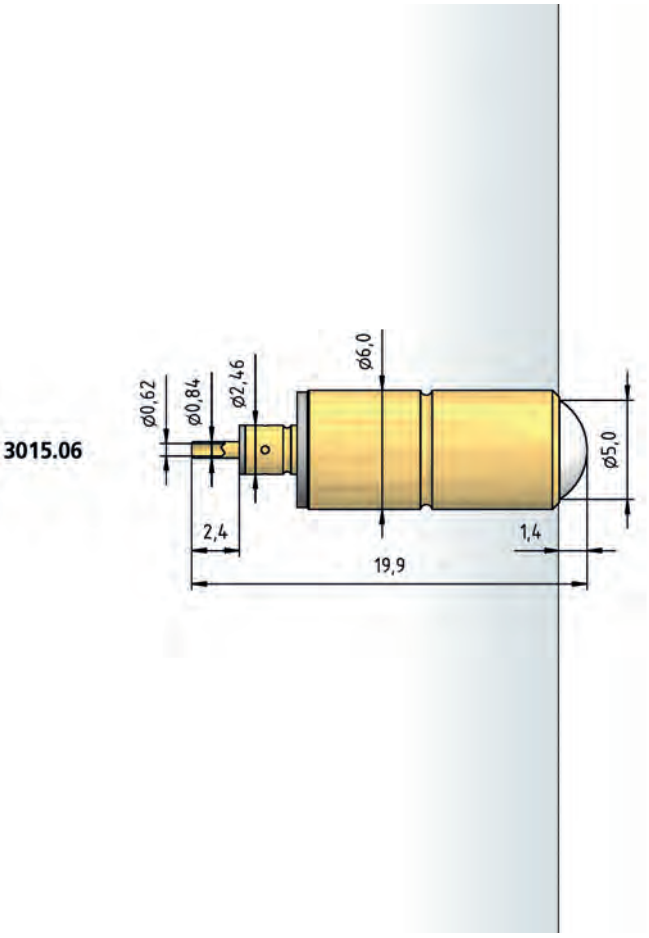


### HOW TO ORDER

| 3015 | .06 | - | D | - | 0.8 N | - | Ni | - | 5.0 |
|---|---|---|---|---|---|---|---|---|---|
| 1 | 2 | | 3 | | 4 | | 5 | | 6 |

1 Series 2 Variant 3 Tip Style 4 Spring Force 5 Tip Plating 6 Tip Diameter

# SWITCHING TEST PROBES
## WITH THREAD

**Switching Test Probes are available in various designs, from simple plug-in types (see page 122) to threaded types to easy-replacement systems.**

Threaded Switching Test Probes are used primarily for cable testing and when a later change to the installation height is necessary (up to 5.0 mm). In these cases, the thread prevents the successive twisting of the Test Probe out of the receptacle. In each case, the electrical connection takes place via a connection to the connector pin of the Switching Test Probe and a connection to the receptacle.

Series 3014/2G and 3024/2G, which have an overall length of only 24.5 mm, are especially compact. As an alternative, both series are available with the easy-replacement system.

Series 3015/G, with its ball-shaped design and a working travel of only 0.8 mm, is especially suitable for applications in which horizontal contacting is necessary.

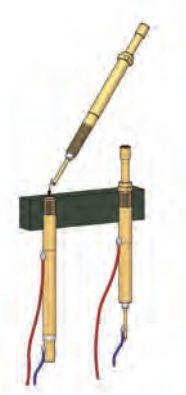

### Switching Test Probes with Easy-Replacement System

The PTR HARTMANN easy-replacement system for switching test probes makes it possible to replace the test probe without releasing the wiring. In this case, the wiring takes place directly on the insulated connection piece of the easy-replacement threaded receptacle which remains in the test module during replacement of the test probe.

The test probe and receptacle are fitted with a matching sprung plug-in system which creates secure, electrical contacting. At the same time, this makes possible faster replacement of the test probe, which contributes to a reduction in servicing times.

L'IMPULSION Retrouvez nous sur www.limpulsion.fr

| SERIES | CENTER | PAGE |
|---|---|---|
| 3035/GW | 75 mil / 1.91 mm | 136 |
| 3020/2G | 100 mil / 2.54 mm | 137 |
| 3020/2GW5 | 100 mil / 2.54 mm | 138 |
| 3023/2GS | 100 mil / 2.54 mm | 139 |
| 3024/2G | 100 mil / 2.54 mm | 140 |
| 3030/GW3 | 100 mil / 2.54 mm | 141 |
| 3010/2G · 3010/10G | 160 mil / 4.00 mm | 142 |
| 3010/2GW(5) | 160 mil / 4.00 mm | 143 |
| 3011/2GS | 160 mil / 4.00 mm | 144 |
| 3011/2FGS | 160 mil / 4.00 mm | 145 |
| 3012/2GS | 138 mil / 3.50 mm | 146 |
| 3012/2GS · FS1/FLS1 | 138 mil / 3.50 mm | 147 |
| 3012/2GSL | 138 mil / 3.50 mm | 148 |
| 3014/2G | 160 mil / 4.00 mm | 149 |
| 3212/2GS | 138 mil / 3.50 mm | 150 |
| 3214/2GW | 160 mil / 4.00 mm | 151 |
| 3015/G | 300 mil / 7.50 mm | 152 |






L'IMPULSION Retrouvez nous sur www.limpulsion.fr

NEW

# Series 3035/GW

Switching Test Probe „Closer“ (NO) 75 mil / 1.91 mm

| BENEFIT |
|---|
| Smalest switching test probe - center 75 mil |
| Available without thread (see page 124) |
| Switching test probe „Closer“ (NO) type |
| Test Probe with switching function for cable harness test and presence verification |
| High soldering temperature up to 300°C |

| MECHANICAL DATA | |
|---|---|
| Center | 1.91 mm / 75 mil |
| Temperature Range | -30 °C - +120 °C |
| Full Travel | 5.00 mm |
| Working Travel | 4.00 mm |
| Switching Travel | 3.50 mm |
| Pre-Loaded Spring Force | 0.15/ 0.60 N |
| Spring Force at Working Travel | 0.80/ 1.50 N |
| Spring Force at Switching Travel | 0.30/ 0.95 N |

| ELECTRICAL DATA | |
|---|---|
| **Receptacle-Plunger** | |
| Max. Current Rating | 4.0 A |
| Typical Continuity Resistance | ≤ 30 mOhm |
| **Pin-Plunger** | |
| Max. Current Rating | 2.0 A |
| Typical Continuity Resistance | ≤ 65 mOhm |
| Typical Insulating Voltage | 1000 V |

| MATERIALS | |
|---|---|
| Barrel | Brass, gold-plated |
| Spring | Spring Steel, gold-plated |
| Plunger | CuBe, gold-plated |
| Receptacle | Brass, gold-plated |

| RECOMMENDED DIAMETER OF DRILL | |
|---|---|
| HP 2361.1 (Trolitax) | 1.32 mm |
| HGW 2372 (Glass filled material) | 1.34 mm |

| AVAILABLE SCREW TOOLS | |
|---|---|
| **Article Designation** | **max. Tip-∅** |
| WFSB 1012/G-1.5-1.0 | 1.0 |
| WFSB 1012/G-1.9-1.5-Z | 1.5 |

## TIP STYLE · DIAMETER · PLATING



| CL | D | DL | DL | F |
|---|---|---|---|---|
| 1.00C Au | 0.50C Au | 0.64C Au | 0.75C Au | 0.80C Au |

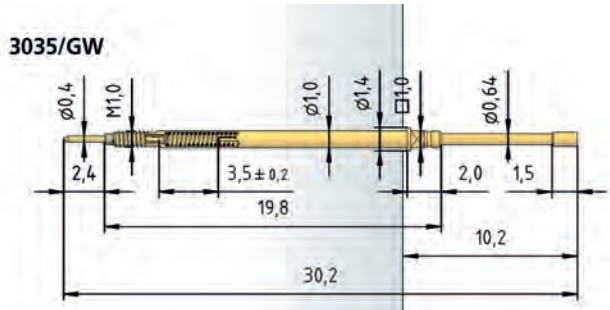


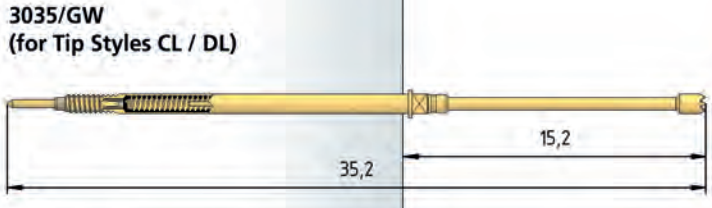


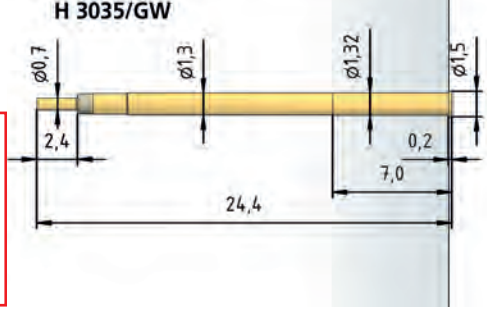


## HOW TO ORDER

| 3035/ | G | W | - | F | - | 1.5 N | - | Au | - | 0.8 | C |
|---|---|---|---|---|---|---|---|---|---|---|---|
| 1 | 2 | 3 | | 4 | | 5 | | 6 | | 7 | 8 |

1 Series 2 Threaded Design 3 Interchangeable without Soldering 4 Tip Style
5 Spring Force 6 Tip Plating 7 Tip Diameter 8 Tip Material (only for CuBe)

L'IMPULSION
Retrouvez nous sur
www.limpulsion.fr

# Switching Test Probe „Closer“ (NO) 100 mil / 2.54 mm

# Series 3020/2G

## TIP STYLE · DIAMETER · PLATING



| A | C | C3 | F | F |
|---|---|---|---|---|
| 1.50 Au | 1.30 Au<br>1.50 Au<br>3.00 Au | 1.50 Au | 0.80 Au | 1.00 Au<br>1.30 Au<br>1.50 Au |



| F1 |
|---|
| 1.50 HTK |

## BENEFIT

- Switching test probe for the cable harness test and presence verification
- Available without thread (see page 125)
- Switching test probe „Closer“ (NO) type
- Switching travel 4.0 mm on request
- High soldering temperature up to 300°C

## MECHANICAL DATA

| | |
|---|---|
| Center | 2.54 mm / 100 mil |
| Temperature Range | -30 °C - +120 °C |
| Full Travel | 5.30 mm |
| Working Travel | 4.00 mm |
| Switching Travel | 2.60 mm |
| Pre-Loaded Spring Force | 0.15/ 0.40/ 0.50/ 1.70 N |
| Spring Force at Working Travel | 0.80/ 1.50/ 3.00/ 6.50 N |
| Spring Force at Switching Travel | 0.25/ 0.80/ 1.80/ 4.50 N |

## ELECTRICAL DATA

| | |
|---|---|
| **Receptacle-Plunger** | |
| Max. Current Rating | 3.0 A |
| Typical Continuity Resistance | ≤ 20 mOhm |
| **Pin-Plunger** | |
| Max. Current Rating | 1.0 A |
| Typical Continuity Resistance | ≤ 50 mOhm |
| Typical Insulating Voltage | 1000 V |

## MATERIALS

| | |
|---|---|
| Barrel | Brass, gold-plated |
| Spring | Spring Steel, gold-plated |
| Plunger | Steel |
| Receptacle | Brass, gold-plated |

## RECOMMENDED DIAMETER OF DRILL

| | |
|---|---|
| HP 2361.1 (Trolitax) | 2.15 mm |
| HGW 2372 (Glass filled material) | 2.16 mm |

## AVAILABLE SCREW TOOLS

| Article Designation | max. Tip-∅ |
|---|---|
| WFSB 1021/G-2.54-1.8 | 1.8 |
| WFSB 1021/G-2.54-2.0 | 2.0 |
| WFSB 1021/G-3.5-3.0-Z | 3.0 |
| WFSB 1021/G-C2S-3.0-2.5-Z | 2.5 |

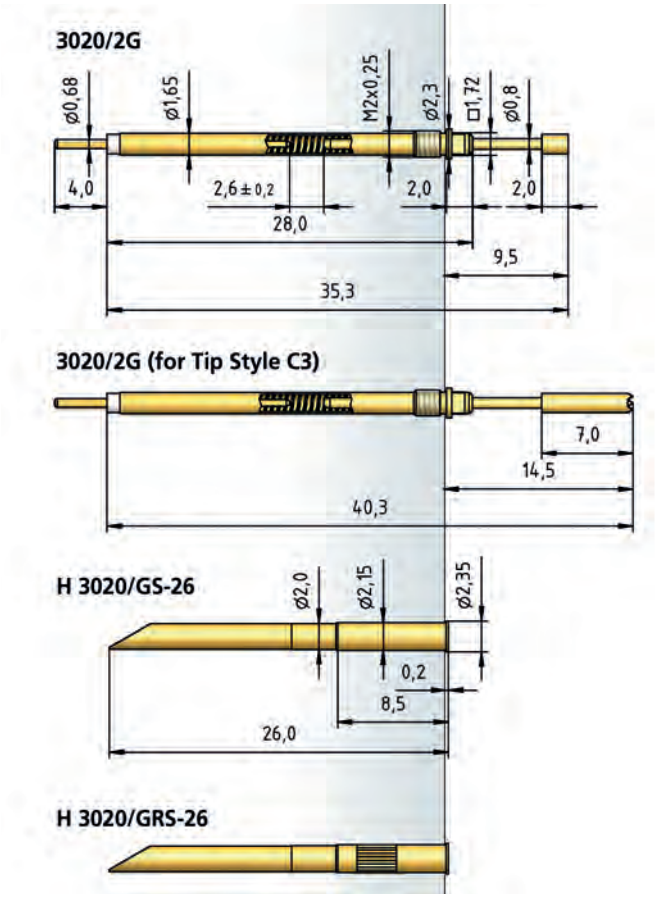


## HOW TO ORDER

| 3020/ | 2 | G | - | F | - | 1.5 N | - | Au | - | 1.5 |
|---|---|---|---|---|---|---|---|---|---|---|
| 1 | 2 | 3 | | 4 | | 5 | | 6 | | 7 |

1 Series 2 Collar Height 3 Threaded Design 4 Tip Style 5 Spring Force 6 Tip Plating 7 Tip Diameter



L'IMPULSION Retrouvez nous sur www.limpulsion.fr

# Series 3020/2GW5

Switching Test Probe „Closer“ (NO) with Easy-Replacement System
100 mil / 2.54 mm

| BENEFIT |
|---|
| Switching test probe for the cable harness test and presence verification |
| Easy-replacement system (replacement without soldering) |
| Switching test probe „Closer“ (NO) type |
| Variable extention height |
| Switching travel 4.0 mm on request |
| High soldering temperature up to 300°C |

| MECHANICAL DATA | |
|---|---|
| Center | 2.54 mm / 100 mil |
| Temperature Range | -30 °C - +120 °C |
| Full Travel | 5.30 mm |
| Working Travel | 4.00 mm |
| Switching Travel | 2.60 mm |
| Pre-Loaded Spring Force | 0.15/ 0.40/ 0.50/ 1.70 N |
| Spring Force at Working Travel | 0.80/ 1.50/ 3.00/ 6.50 N |
| Spring Force at Switching Travel | 0.25/ 0.80/ 1.80/ 4.50 N |

| ELECTRICAL DATA | |
|---|---|
| **Receptacle-Plunger** | |
| Max. Current Rating | 3.0 A |
| Typical Continuity Resistance | ≤ 20 mOhm |
| **Pin-Plunger** | |
| Max. Current Rating | 1.0 A |
| Typical Continuity Resistance | ≤ 50 mOhm |
| Typical Insulating Voltage | 1000 V |

| MATERIALS | |
|---|---|
| Barrel | Brass, gold-plated |
| Spring | Spring Steel, gold-plated |
| Plunger | Steel |
| Receptacle | Brass, gold-plated |

| RECOMMENDED DIAMETER OF DRILL | |
|---|---|
| HP 2361.1 (Trolitax) | 2.15 mm |
| HGW 2372 (Glass filled material) | 2.16 mm |

| AVAILABLE SCREW TOOLS | |
|---|---|
| **Article Designation** | **max. Tip-∅** |
| WFSB 1021/G-2.54-1.8 | 1.8 |
| WFSB 1021/G-2.54-2.0 | 2.0 |
| WFSB 1021/G-3.5-3.0-Z | 3.0 |
| WFSB 1021/G-C2S-3.0-2.5-Z | 2.5 |

## TIP STYLE · DIAMETER · PLATING



| A | C | C3 | F | F |
|---|---|---|---|---|
| 1.50 Au | 1.30 Au<br>1.50 Au<br>3.00 Au | 1.50 Au | 0.80 Au | 1.00 Au<br>1.30 Au<br>1.50 Au |



| F1 |
|---|
| 1.50 HTK |

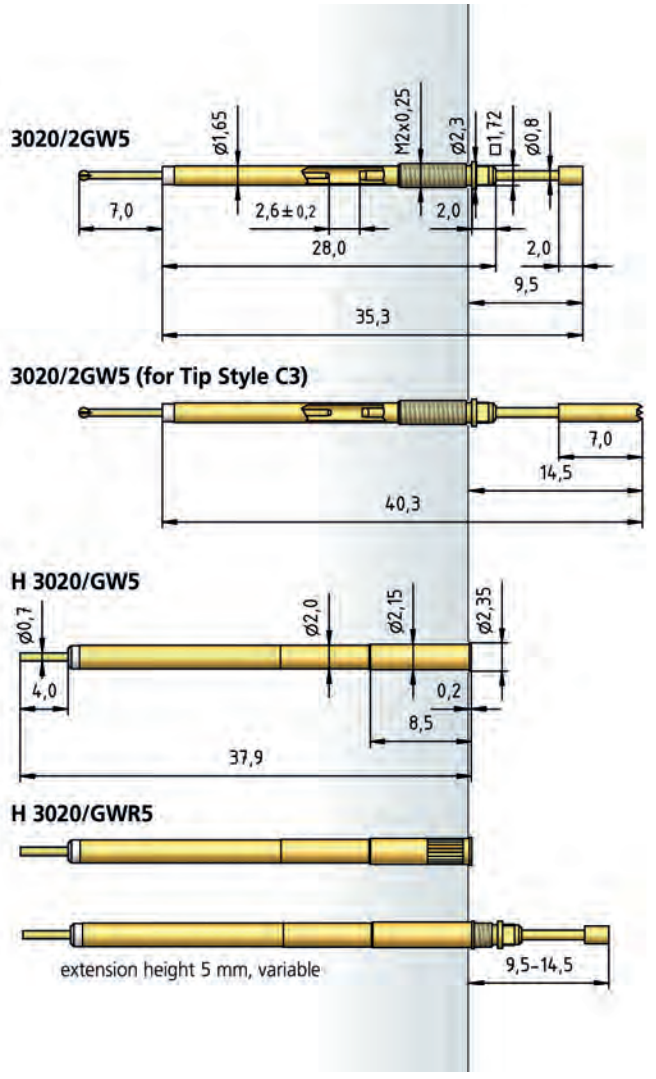


## HOW TO ORDER

| 3020/ | 2 | G | W | 5 | - | F | - | 1.5 N | - | Au | - | 1.5 |
|---|---|---|---|---|---|---|---|---|---|---|---|---|
| 1 | 2 | 3 | 4 | 5 | | 6 | | 7 | | 8 | | 9 |

1 Series 2 Collar Height 3 Threaded Design 4 Interchangeable without Soldering 5 Adjustment Area of the Extension Height 6 Tip Style 7 Spring Force 8 Tip Plating 9 Tip Diameter

L'IMPULSION
Retrouvez nous sur
www.limpulsion.fr

# Switching Test Probe „Closer“ (NO) with Easy-Replacement System 100 mil / 2.54 mm

# Series 3023/2GS

## TIP STYLE · DIAMETER · PLATING



| A | C | CL | D | DL |
|---|---|---|---|---|
| 1.80 Au | 1.00 Au<br>1.30 Au<br>1.50 Au<br>1.80 Au<br>2.00 Au<br>2.30 Au | 1.00 Au<br>1.40 Au<br>1.80 Au | 1.00 Au | 1.00 Au |




| D1 | F | F | F | F1 |
|---|---|---|---|---|
| 0.64 Au | 0.64 Au | 0.70 Au<br>0.80 Au<br>1.00 Au | 1.80 Au | 1.80 Au/HTK<br>2.30 Au/HTK |



| FL |
|---|
| 1.00 Au |

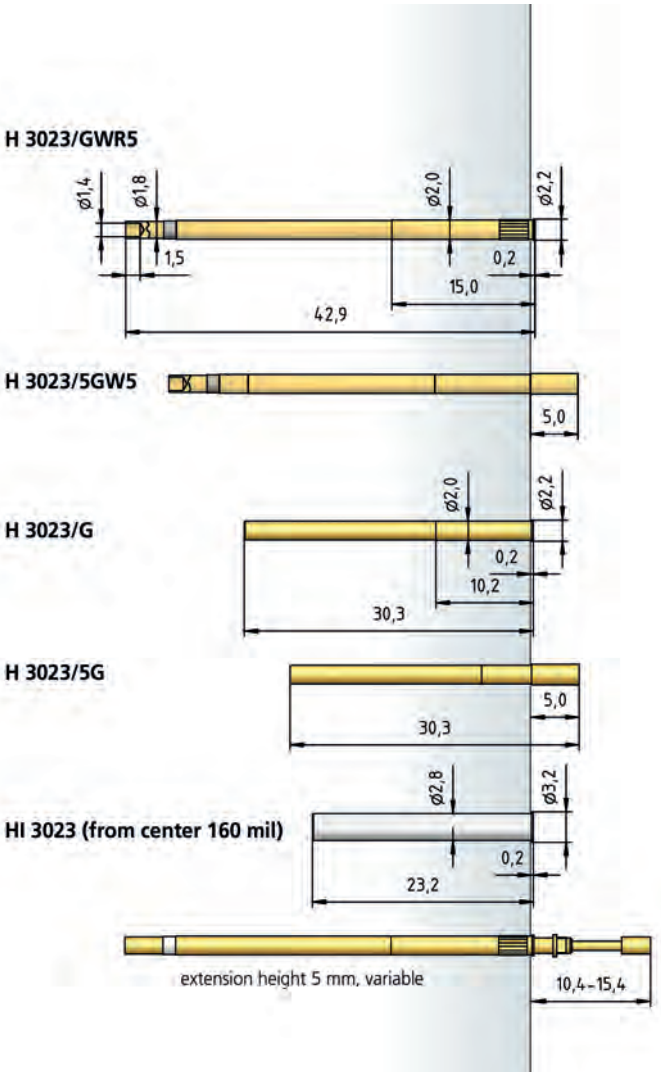


## BENEFIT

| |
|---|
| Switching test probe for the cable harness test and presence verification |
| Easy-replacement system (replacement without soldering) |
| Switching test probe „Closer“ (NO) type |
| Variable extention height |
| High soldering temperature up to 300°C |

## MECHANICAL DATA

| | |
|---|---|
| Center | 2.54 mm / 100 mil |
| Temperature Range | -30 °C - +120 °C |
| Full Travel | 5.00 mm |
| Working Travel | 4.00 mm |
| Switching Travel | 1.50 mm |
| Pre-Loaded Spring Force | 0.12/ 0.30/ 0.40/ 0.80/ 0.80/ 1.40 N |
| Spring Force at Working Travel | 0.85/ 1.35/ 2.00/ 3.00/ 3.50/ 6.50 N |
| Spring Force at Switching Travel | 0.20/ 0.50/ 0.80/ 1.45/ 1.60/ 3.10 N |

## ELECTRICAL DATA

| | |
|---|---|
| **Receptacle-Plunger** | |
| Max. Current Rating | 3.0 A |
| Typical Continuity Resistance | ≤ 20 mOhm |
| **Pin-Plunger** | |
| Max. Current Rating | 1.0 A |
| Typical Continuity Resistance | ≤ 50 mOhm |
| Typical Insulating Voltage | 1000 V |

## MATERIALS

| | |
|---|---|
| Barrel | Brass, gold-plated |
| Spring | Spring Steel, gold-plated |
| Plunger | Steel |
| Receptacle | Brass, gold-plated |

## RECOMMENDED DIAMETER OF DRILL

| | |
|---|---|
| HP 2361.1 (Trolitax) | 2.00 mm |
| HGW 2372 (Glass filled material) | 2.01 mm |

## AVAILABLE SCREW TOOLS

| Article Designation | max. Tip-∅ |
|---|---|
| WFSB 1021/G-2.54-1.8 | 1.8 |
| WFSB 1021/G-2.54-2.0 | 2.0 |
| WFSB 1021/G-3.5-3.0-Z | 3.0 |
| WFSB 1021/G-C2S-3.0-2.5-Z | 2.5 |

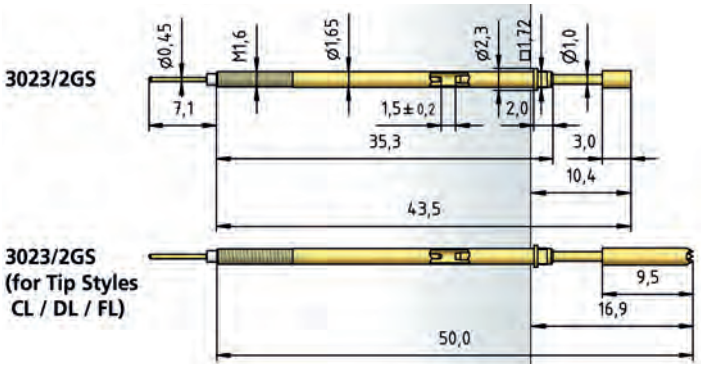


## HOW TO ORDER

| 3023/ | 2 | G | S | - | F | - | 3.5 N | - | Au | - | 1.8 |
|---|---|---|---|---|---|---|---|---|---|---|---|
| 1 | 2 | 3 | 4 | | 5 | | 6 | | 7 | | 8 |

1 Series 2 Collar Height 3 Threaded Design 4 Plug-in Connector 5 Tip Style
6 Spring Force 7 Tip Plating 8 Tip Diameter

11

L'IMPULSION
Retrouvez nous sur
www.limpulsion.fr

# Series 3024/2G

Switching Test Probe „Closer“ (NO) with Easy-Replacement System
100 mil / 2.54 mm

| BENEFIT |
|---|
| Switching test probe for the cable harness test and presence verification |
| Easy-replacement system (replacement without soldering) |
| Switching test probe „Closer“ (NO) type |
| Short design |
| High soldering temperature up to 300°C |

| MECHANICAL DATA | |
|---|---|
| Center | 2.54 mm / 100 mil |
| Temperature Range | -30 °C - +120 °C |
| Full Travel | 5.00 mm |
| Working Travel | 4.00 mm |
| Switching Travel | 2.60 mm |
| Pre-Loaded Spring Force | 0.30/ 0.50/ 0.50 N |
| Spring Force at Working Travel | 1.35/ 2.00/ 2.50 N |
| Spring Force at Switching Travel | 1.00/ 1.50/ 1.80 N |

| ELECTRICAL DATA | |
|---|---|
| **Receptacle-Plunger** | |
| Max. Current Rating | 3.0 A |
| Typical Continuity Resistance | ≤ 20 mOhm |
| Typical Insulating Voltage | 1000 V |
| **Pin-Plunger** | |
| Max. Current Rating | 1.0 A |
| Typical Continuity Resistance | ≤ 50 mOhm |

| MATERIALS | |
|---|---|
| Barrel | Brass, gold-plated |
| Spring | Spring Steel, gold-plated |
| Plunger | CuBe, gold-plated with Insulator |
| Receptacle | Brass, gold-plated |

| RECOMMENDED DIAMETER OF DRILL | |
|---|---|
| HP 2361.1 (Trolitax) | 2.15 mm |
| HGW 2372 (Glass filled material) | 2.16 mm |

| AVAILABLE SCREW TOOLS | |
|---|---|
| **Article Designation** | **max. Tip-∅** |
| WFSB 1021/G-2.54-1.8 | 1.8 |
| WFSB 1021/G-2.54-2.0 | 2.0 |
| WFSB 1021/G-3.5-3.0-Z | 3.0 |
| WFSB 1021/G-C2S-3.0-2.5-Z | 2.5 |

## TIP STYLE · DIAMETER · PLATING



| C | D | F | F1 | FS1 |
|---|---|---|---|---|
| 1.80C Au | 1.00C Au | 1.00C Au | 1.80 HTK | 2.00C Ni/S |

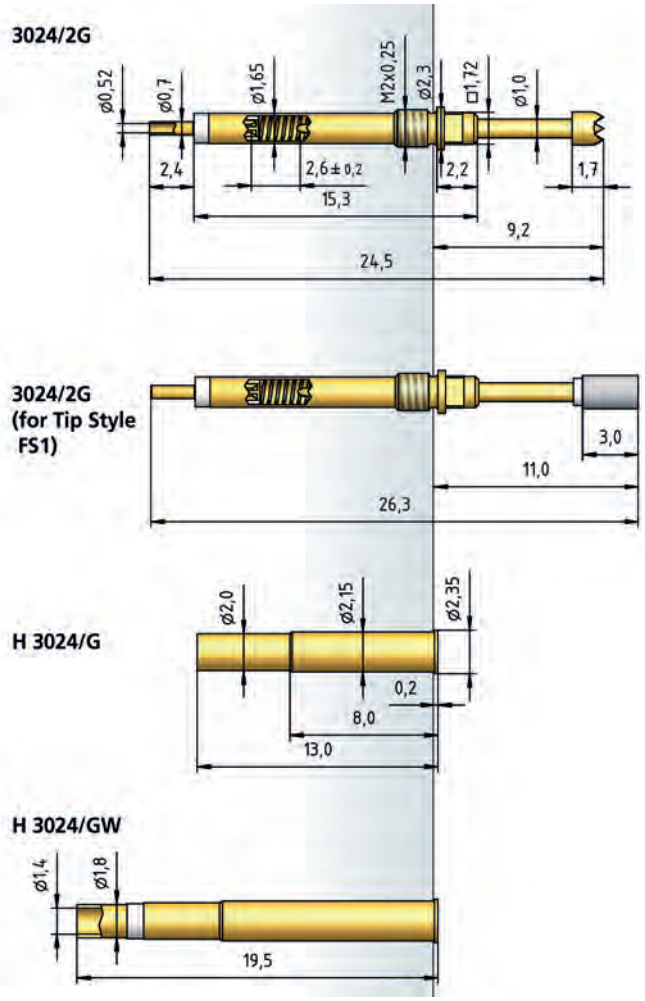


## HOW TO ORDER

| 3024/ | 2 | G | - | C | - | 2.0 N | - | Au | - | 1.8 | C |
|---|---|---|---|---|---|---|---|---|---|---|---|
| 1 | 2 | 3 | | 4 | | 5 | | 6 | | 7 | 8 |

1 Series 2 Collar Height 3 Threaded Design 4 Tip Style 5 Spring Force
6 Tip Plating 7 Tip Diameter 8 Tip Material (only for CuBe)

L'IMPULSION
Retrouvez nous sur
www.limpulsion.fr

# Switching Test Probe „Closer“ (NO) with Easy-Replacement System
100 mil / 2.54 mm

## Series 3030/GW3

### TIP STYLE · DIAMETER · PLATING




| C | D | D1 | DL | F |
|---|---|---|---|---|
| 1.00 Au<br>1.30 Au | 0.65 Au | 0.61 Au | 0.65 Au | 1.00 Au |



| FL |
|---|
| 0.70 Au |

### BENEFIT

- Switching test probe for the cable harness test and presence verification
- Available without thread (see page 127)
- Easy-replacement system (replacement without soldering)
- Switching test probe „Closer“ (NO) type
- High soldering temperature up to 300°C

### MECHANICAL DATA

| | |
|---|---|
| Center | 2.54 mm / 100 mil |
| Temperature Range | -30 °C - +120 °C |
| Full Travel | 6.30 mm |
| Working Travel | 5.00 mm |
| Switching Travel | 4.00 mm |
| Pre-Loaded Spring Force | 0.30 N |
| Spring Force at Working Travel | 2.00 N |
| Spring Force at Switching Travel | 1.00 N |

### ELECTRICAL DATA

| | |
|---|---|
| Max. Current Rating | 1.0 A |
| Typical Continuity Resistance | ≤ 50 mOhm |
| Typical Insulating Voltage | 1000 V |

### MATERIALS

| | |
|---|---|
| Barrel | Brass, gold-plated |
| Spring | Spring Steel, gold-plated |
| Plunger | Steel |
| Receptacle | Brass, gold-plated |

### RECOMMENDED DIAMETER OF DRILL

| | |
|---|---|
| HP 2361.1 (Trolitax) | 1.65 mm |
| with pressed-in Ring | 1.75 mm |
| HGW 2372 (Glass filled material) | 1.67 mm |
| with pressed-in Ring | 1.67 mm |

### AVAILABLE SCREW TOOLS

| Article Designation | max. Tip-∅ |
|---|---|
| WFSB 1015/G-2.54-1.5 | 1.5 |
| WFSB 1015/G-2.54-1.8 | 1.8 |

**3030/GW3**

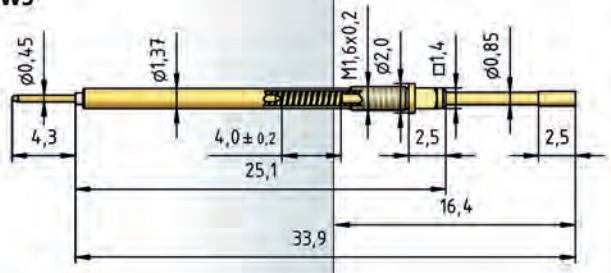


**3030/GW3 (for Tip Styles DL/ FL)**




**H 3030/GW3**

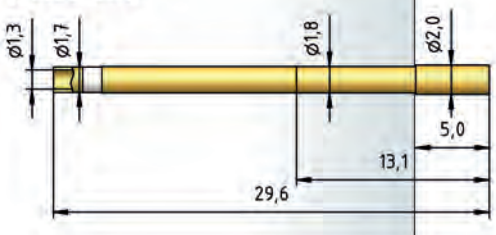


### HOW TO ORDER

| 3030/ | G | W | 3 | - | F | - | 2.0 N | - | Au | - | 1.0 |
|---|---|---|---|---|---|---|---|---|---|---|---|
| 1 | 2 | 3 | 4 | | 5 | | 6 | | 7 | | 8 |

1 Series 2 Threaded Design 3 Interchangeable without Soldering 4 Adjustment Area of the Extension Height 5 Tip Style 6 Spring Force 7 Tip Plating 8 Tip Diameter

11

L'IMPULSION Retrouvez nous sur www.limpulsion.fr

# Series 3010/2G • 3010/10G

## Switching Test Probe „Closer“ (NO) 160 mil / 4.0 mm

| BENEFIT | |
|---|---|
| Switching test probe for the cable harness test and presence verification | |
| Available without thread (see page 129) | |
| Switching travel 4.0 mm on request | |
| High soldering temperature up to 300°C | |
| **MECHANICAL DATA** | |
| Center | 4.00 mm / 160 mil |
| Temperature Range | -30 °C - +120 °C |
| Full Travel | 5.00 mm |
| Working Travel | 4.00 mm |
| Switching Travel | 1.70 mm |
| Pre-Loaded Spring Force | 0.12/ 0.30/ 1.80/ 1.70/ 2.70/ 5.00 N |
| Spring Force at Working Travel | 1.25/ 2.30/ 7.00/ 9.00/ 10.00/ 13.00 N |
| Spring Force at Switching Travel | 0.18/ 0.70/ 3.60/ 4.40/ 5.40/ 8.00 N |
| **ELECTRICAL DATA** | |
| **Receptacle-Plunger** | |
| Max. Current Rating | 5.0 A |
| Typical Continuity Resistance | ≤ 15 mOhm |
| **Pin-Plunger** | |
| Max. Current Rating | 1.0 A |
| Typical Continuity Resistance | ≤ 50 mOhm |
| Typical Insulating Voltage | 1000 V |
| **MATERIALS** | |
| Barrel | Brass, gold-plated |
| Spring | Spring Steel, gold-plated |
| Plunger | Steel |
| Receptacle | Brass, gold-plated |
| **RECOMMENDED DIAMETER OF DRILL** | |
| HP 2361.1 (Trolitax) | 3.28 mm |
| HGW 2372 (Glass filled material) | 3.29 mm |
| **AVAILABLE SCREW TOOLS** | |
| See page 143 | |

**TABLE CONNECTOR PIN**

| Connector Pin ∅ X (mm) | Connector Pin Length Y (mm) |
|---|---|
| 0.5 | 6.0 |
| 1.0 | 2.5 |
| 1.0 | 4.0 |

**LENGTHS FOR TEST PROBE 3010/2G FOR TIP STYLES CLx / FLx**

| Tip Style | E (mm) | L (mm) |
|---|---|---|
| CL, CL1 | 16.7 | 42.5 |
| CL2 | 22.2 | 48.0 |
| CL3, FL3 | 22.9 | 48.7 |

**LENGTHS FOR TEST PROBE 3010/10G FOR TIP STYLES CLx / FLx**

| Tip Style | E (mm) | L (mm) |
|---|---|---|
| CL, CL1 | 24.7 | 42.5 |
| CL2 | 30.2 | 48.0 |
| CL3, FL3 | 30.9 | 48.7 |

## HOW TO ORDER

| 3010/ | 2 | G | - | A | - | 2.3 N | - | Au | - | 2.3 | /1.0x | 4.0 |
|---|---|---|---|---|---|---|---|---|---|---|---|---|
| 1 | 2 | 3 | | 4 | | 5 | | 6 | | 7 | 8 | 9 |

1 Series 2 Collar Height 3 Threaded Design 4 Tip Style 5 Spring Force
6 Tip Plating 7 Tip Diameter 8 Connector Pin Diameter
9 Connector Pin Length

**TIP STYLE · DIAMETER · PLATING**




| A | C | C | CL | C1 |
|---|---|---|---|---|
| 2.30 Au | 1.80 Au | 2.30 Au<br>3.00 Au<br>4.00 Au | 2.30 Au | 1.00 Au |

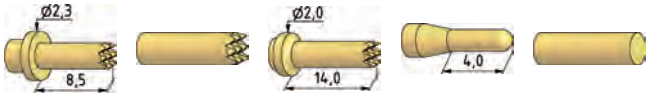


| CL1 | CL2 | CL3 | D6 | F |
|---|---|---|---|---|
| 1.00 Au | 1.80 Au | 1.00 Au | 1.00 Au | 1.80 Au |

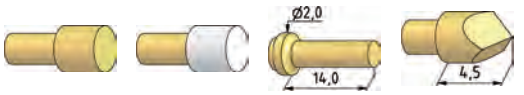


| F | F1 | FL3 | H2 |
|---|---|---|---|
| 2.00 Au<br>2.30 Au | 2.30 HTK<br>3.00 HTK<br>4.00 HTK<br>5.00 HTK | 1.00 Au | 2.60 Au |

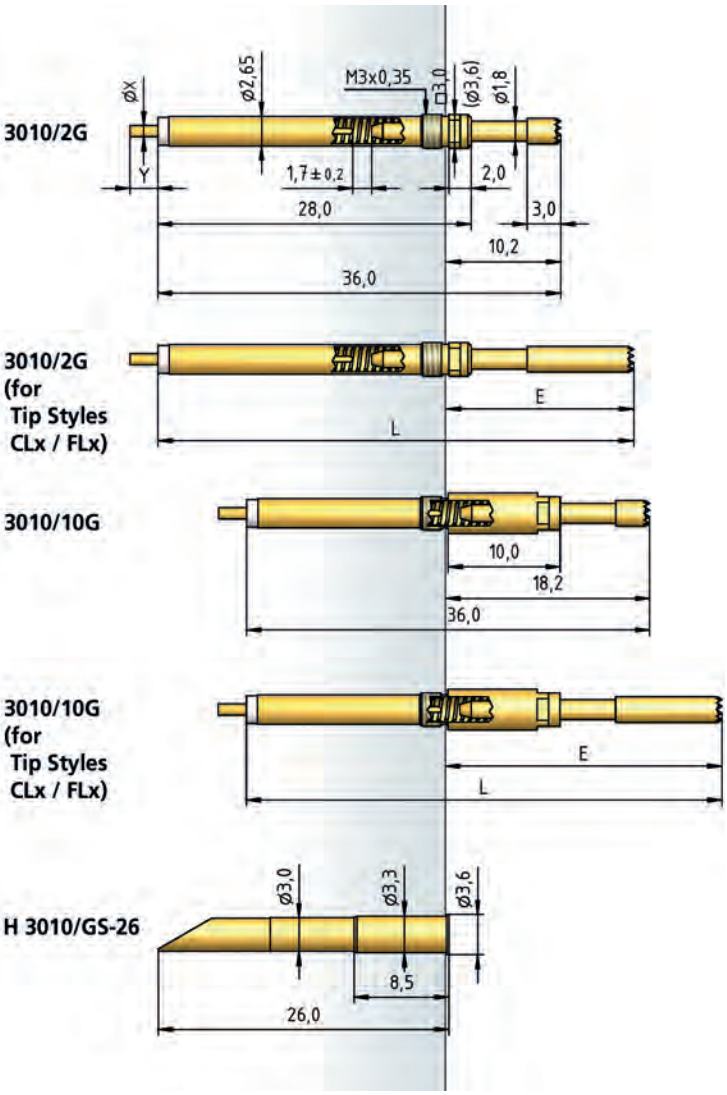

# Switching Test Probe „Closer“ (NO) with Easy-Replacement System 160 mil / 4.0 mm

# Series 3010/2GW(5)

## TIP STYLE · DIAMETER · PLATING




| A | C | C | CL | C1 |
|---|---|---|---|---|
| 2.30 Au | 1.80 Au | 2.30 Au<br>3.00 Au<br>4.00 Au | 2.30 Au | 1.00 Au |

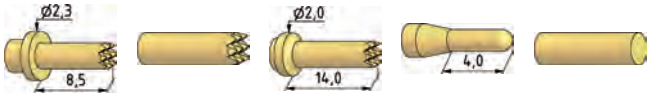


| CL1 | CL2 | CL3 | D6 | F |
|---|---|---|---|---|
| 1.00 Au | 1.80 Au | 1.00 Au | 1.00 Au | 1.80 Au |

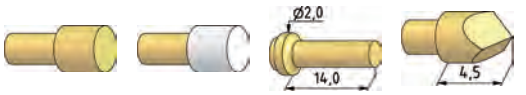


| F | F1 | FL3 | H2 |
|---|---|---|---|
| 2.00 Au<br>2.30 Au | 2.30 HTK<br>3.00 HTK<br>4.00 HTK<br>5.00 HTK | 1.00 Au | 2.60 Au |

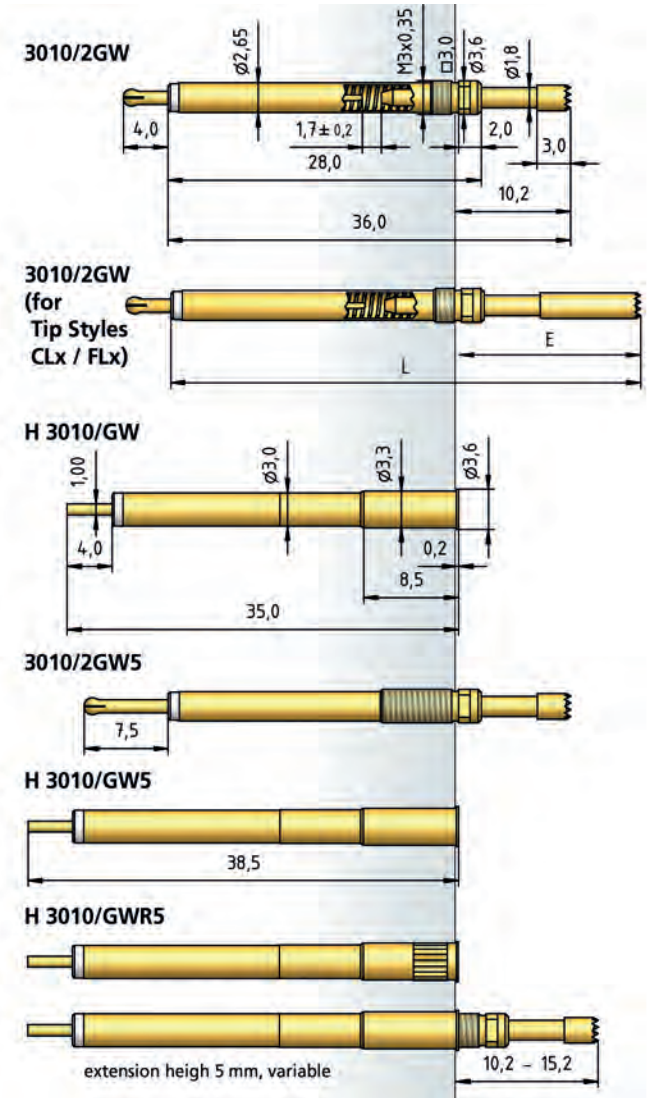


## BENEFIT

| |
|---|
| Switching test probe for the cable harness test and presence verification |
| Available without thread (see page 131) |
| Easy-replacement system (replacement without soldering) |
| Switching test probe „Closer“ (NO) type |
| Variable extention height |
| Switching travel 4.0 mm on request |
| High soldering temperature up to 300°C |

## MECHANICAL DATA

| | |
|---|---|
| Center | 4.00 mm / 160 mil |
| Temperature Range | -30 °C - +120 °C |
| Full Travel | 5.00 mm |
| Working Travel | 4.00 mm |
| Switching Travel | 1.70 mm |
| Pre-Loaded Spring Force | 0.12/ 0.25/ 0.30/ 0.40/ 0.60/ 1.80/ 1.40/ 1.70/ 2.00/ 2.70/ 2.00/ 5.00/ 4.00 N |
| Spring Force at Working Travel | 1.25/ 1.75/ 2.30/ 2.80/ 4.00/ 7.00/ 7.50/ 9.00/ 9.50/ 10.00/ 10.50/ 13.00/ 13.50 N |
| Spring Force at Switching Travel | 0.20/ 0.45/ 0.75/ 1.00/ 1.60/ 3.60/ 3.60/ 4.40/ 4.80/ 5.40/ 5.20/ 8.00/ 7.60 N |

## ELECTRICAL DATA

| | |
|---|---|
| **Receptacle-Plunger** | |
| Max. Current Rating | 5.0 A |
| Typical Continuity Resistance | ≤ 15 mOhm |
| **Pin-Plunger** | |
| Max. Current Rating | 1.0 A |
| Typical Continuity Resistance | ≤ 50 mOhm |
| Typical Insulating Voltage | 1000 V |

## MATERIALS

| | |
|---|---|
| Barrel | Brass, gold-plated |
| Spring | Spring Steel, gold-plated |
| Plunger | Steel |
| Receptacle | Brass, gold-plated |

## RECOMMENDED DIAMETER OF DRILL

| | |
|---|---|
| **H 3010/GW(5)** | |
| HP 2361.1 (Trolitax) | 3.28 mm |
| HGW 2372 (Glass filled material) | 3.29 mm |
| **H 3010/GWR5** | |
| HP 2361.1 (Trolitax) | 3.31 mm |
| HGW 2372 (Glass filled material) | 3.32 mm |

## AVAILABLE SCREW TOOLS

| Article Designation | max. Tip-∅ |
|---|---|
| WFSB 1060/G-4.0-3.0 | 3.0 |
| WFSB 1060/G-5.0-4.0-Z | 4.0 |
| WFSB 1060/G-6.0-5.0-Z | 5.0 |

## LENGTHS FOR TEST PROBE 3010/2GW(5) FOR TIP STYLES CLx / FLx

See page 142 - Lengths for Test Probe 3010/2G

## HOW TO ORDER

| 3010/ | 2 | G | W | 5 | - | C | - | 1.3 N | - | Au | - | 2.3 |
|---|---|---|---|---|---|---|---|---|---|---|---|---|
| 1 | 2 | 3 | 4 | 5 | | 6 | | 7 | | 8 | | 9 |

1 Series 2 Collar Height 3 Threaded Design 4 Interchangeable without Soldering 5 Adjustment Area of the Extension Height 6 Tip Style 7 Spring Force 8 Tip Plating 9 Tip Diameter

11

L'IMPULSION Retrouvez nous sur www.limpulsion.fr

# Series 3011/2GS

Switching Test Probe „Closer“ (NO) with Easy-Replacement System
160 mil / 4.0 mm

## BENEFIT

- Switching test probe for the cable harness test and presence verification
- Easy-replacement system (replacement without soldering)
- Switching test probe „Closer“ (NO) type
- Variable extention height
- Switching travel 4.0 mm on request
- High soldering temperature up to 300°C

## MECHANICAL DATA

| | |
|---|---|
| Center | 4.00 mm / 160 mil |
| Temperature Range | -30 °C - +120 °C |
| Full Travel | 5.00 mm |
| Working Travel | 4.00 mm |
| Switching Travel | 1.70 mm |
| Pre-Loaded Spring Force | 0.12/ 0.25/ 0.30/ 0.40/ 0.60/ 1.80/ 1.40/ 1.70/ 2.00/ 2.70/ 2.00/ 5.00/ 4.00 N |
| Spring Force at Working Travel | 0.75/ 1.25/ 1.80/ 2.30/ 3.50/ 6.50/ 7.00/ 8.50/ 9.00/ 9.50/ 10.00/ 12.50/ 13.00 N |
| Spring Force at Switching Travel | 0.20/ 0.45/ 0.75/ 1.00/ 1.60/ 3.60/ 3.60/ 4.40/ 4.80/ 5.40/ 5.20/ 8.00/ 7.60 N |

## ELECTRICAL DATA

| | |
|---|---|
| **Receptacle-Plunger** | |
| Max. Current Rating | 5.0 A |
| Typical Continuity Resistance | ≤ 15 mOhm |
| **Pin-Plunger** | |
| Max. Current Rating | 1.0 A |
| Typical Continuity Resistance | ≤ 50 mOhm |
| Typical Insulating Voltage | 1000 V |

## MATERIALS

| | |
|---|---|
| Barrel | Brass, gold-plated |
| Spring | Spring Steel, gold-plated |
| Plunger | Steel, gold-plated with Insulator |
| Receptacle | Brass, gold-plated |

## RECOMMENDED DIAMETER OF DRILL

| | |
|---|---|
| **H 3011/GWR5 (/R /RK)** | |
| HP 2361.1 (Trolitax) | 3.02 mm |
| HGW 2372 (Glass filled material) | 3.04 mm |
| **H 3011/K (/5K)** | |
| HP 2361.1 (Trolitax) | 3.01 mm |
| HGW 2372 (Glass filled material) | 3.02 mm |

## AVAILABLE SCREW TOOLS

| **Article Designation** | **max. Tip-∅** |
|---|---|
| WFSB 1060/G-4.0-3.0 | 3.0 |
| WFSB 1060/G-5.0-4.0-Z | 4.0 |
| WFSB 1060/G-6.0-5.0-Z | 5.0 |

## LENGTHS FOR TEST PROBE 3011/2GS FOR TIP STYLES CLx / FLx

See page 142 - Lengths for Test Probe 3010/2G

**Receptacles see page 145**

## TIP STYLE · DIAMETER · PLATING




| A | C | C | CL | C1 |
|---|---|---|---|---|
| 2.30 Au | 1.80 Au | 2.30 Au<br>3.00 Au<br>4.00 Au | 2.30 Au | 1.00 Au |

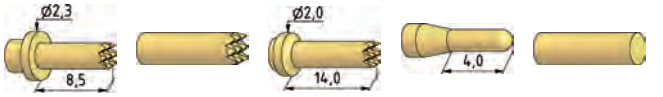


| CL1 | CL2 | CL3 | D6 | F |
|---|---|---|---|---|
| 1.00 Au | 1.80 Au | 1.00 Au | 1.00 Au | 1.80 Au |




| F | F1 | F1L | FL3 | F7 |
|---|---|---|---|---|
| 2.00 Au<br>2.30 Au | 2.30 HTK<br>3.00 HTK<br>4.00 HTK<br>5.00 HTK | 2.30 HTK<br>3.00 HTK | 1.00 Au | 1.00 Au |




| H2 |
|---|
| 2.60 Au |

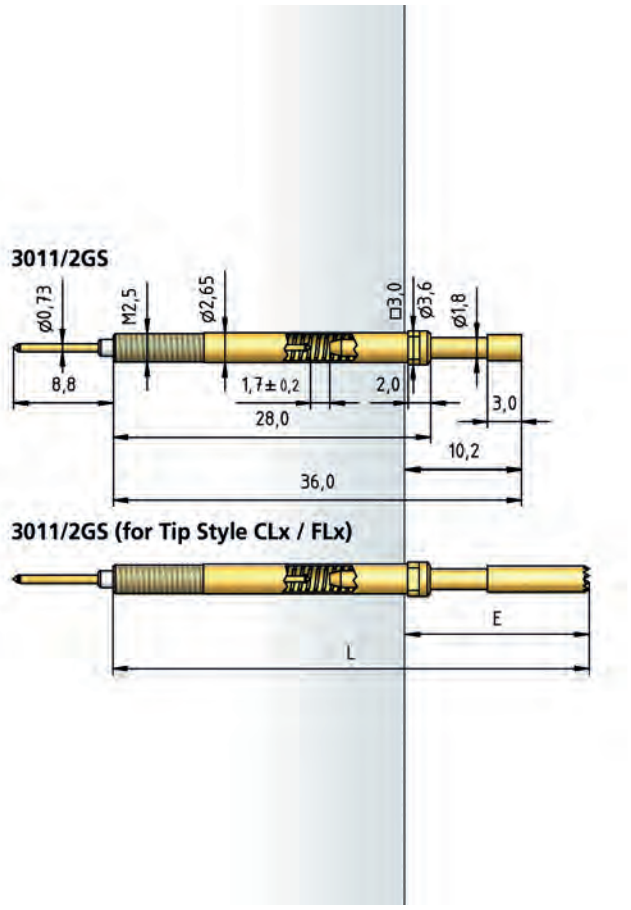


## HOW TO ORDER

| 3011/ | 2 | G | S | - | C | - | 1.8 N | - | Au | - | 2.3 |
|---|---|---|---|---|---|---|---|---|---|---|---|
| 1 | 2 | 3 | 4 | | 5 | | 6 | | 7 | | 8 |

1 Series 2 Collar Height 3 Threaded Design 4 Plug-in Connector 5 Tip Style 6 Spring Force 7 Tip Plating 8 Tip Diameter

L'IMPULSION
Retrouvez nous sur
www.limpulsion.fr

# Switching Test Probe "Opener" (NC) with Easy-Replacement System 160 mil / 4.0 mm

# Series 3011/2FGS

## TIP STYLE · DIAMETER · PLATING



| C |
|---|
| 2.30 Au |

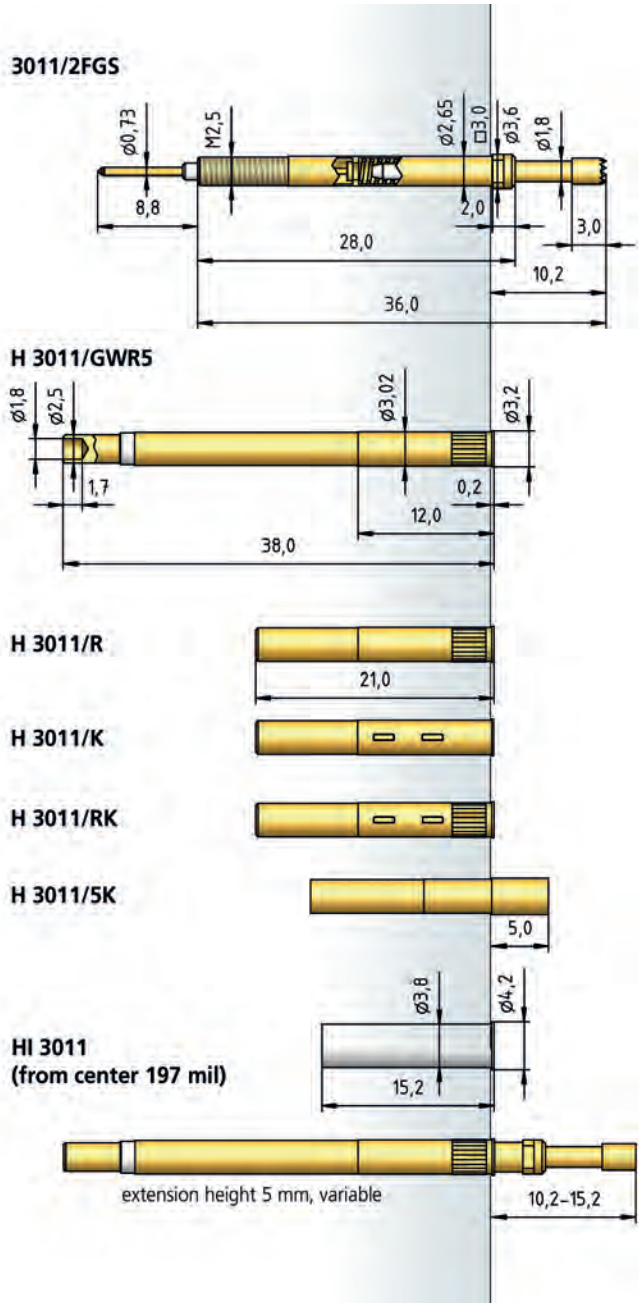


## BENEFIT

| |
|---|
| Switching test probe for the cable harness test and presence verification |
| Easy-replacement system (replacement without soldering) |
| Switching test probe "Opener" (NC) type |
| Variable extention height |
| High soldering temperature up to 300°C |

## MECHANICAL DATA

| | |
|---|---|
| Center | 4.00 mm / 160 mil |
| Temperature Range | -30 °C - +120 °C |
| Full Travel | 5.00 mm |
| Working Travel | 4.00 mm |
| Switching Travel | 1.70 mm |
| Pre-Loaded Spring Force | 0.12/ 0.25/ 0.30/ 0.40/ 0.60/ 1.80/ 1.40/ 1.70/ 2.00/ 2.70/ 2.00/ 5.00/ 4.00 N |
| Spring Force at Working Travel | 0.75/ 1.25/ 1.80/ 2.30/ 3.50/ 6.50/ 7.00/ 8.50/ 9.00/ 9.50/ 10.00/ 12.50/ 13.00 N |
| Spring Force at Switching Travel | 0.20/ 0.45/ 0.75/ 1.00/ 1.60/ 3.60/ 4.40/ 4.80/ 5.40/ 5.20/ 8.00/ 7.60 N |

## ELECTRICAL DATA

| | |
|---|---|
| **Receptacle-Plunger** | |
| Max. Current Rating | 5.0 A |
| Typical Continuity Resistance | ≤ 15 mOhm |
| **Pin-Plunger** | |
| Max. Current Rating | 1.0 A |
| Typical Continuity Resistance | ≤ 50 mOhm |

## MATERIALS

| | |
|---|---|
| Barrel | Brass, gold-plated |
| Spring | Spring Steel, gold-plated |
| Plunger | Steel |
| Receptacle | Brass, gold-plated |

## RECOMMENDED DIAMETER OF DRILL

| | |
|---|---|
| **H 3011/GWR5 (/R /RK)** | |
| HP 2361.1 (Trolitax) | 3.02 mm |
| HGW 2372 (Glass filled material) | 3.04 mm |
| **H 3011/K (/5K)** | |
| HP 2361.1 (Trolitax) | 3.01 mm |
| HGW 2372 (Glass filled material) | 3.02 mm |

## AVAILABLE SCREW TOOLS

| **Article Designation** | **max. Tip-∅** |
|---|---|
| WFSB 1060/G-4.0-3.0 | 3.0 |

11

## HOW TO ORDER

| 3011/ | 2 | F | G | S | - | C | - | 1.8 N | - | Au | - | 2.3 |
|---|---|---|---|---|---|---|---|---|---|---|---|---|
| 1 | 2 | 3 | 4 | 5 | | 6 | | 7 | | 8 | | 9 |

1 Series 2 Collar Height 3 Type Opener 4 Threaded Design
5 Plug-in Connector 6 Tip Style 7 Spring Force 8 Tip Plating 9 Tip Diameter

L'IMPULSION Retrouvez nous sur www.limpulsion.fr

# Series 3012/2GS

Switching Test Probe „Closer“ (NO) with Easy-Replacement System
138 mil / 3.5 mm

| BENEFIT |
|---|
| Switching test probe for the cable harness test and presence verification |
| Easy-replacement system (replacement without soldering) |
| Switching test probe „Closer“ (NO) type |
| Variable extention height |
| Version for large tip diameters |
| Switching travel 4.0 mm on request |
| High soldering temperature up to 300°C |

| MECHANICAL DATA | |
|---|---|
| Center | 3.50 mm / 138 mil |
| Temperature Range | -30 °C - +120 °C |
| Full Travel | 4.20 mm |
| Working Travel | 4.00 mm |
| Switching Travel | 1.70 mm |
| Pre-Loaded Spring Force | 0.12/ 0.25/ 0.30/ 0.40/ 0.60/ 1.80/ 1.40/ 1.70/ 2.00/ 2.70/ 2.00/ 5.00/ 4.00 N |
| Spring Force at Working Travel | 0.75/ 1.25/ 1.80/ 2.30/ 3.50/ 6.50/ 7.00/ 8.50/ 9.00/ 9.50/ 10.00/ 12.50/ 13.00 N |
| Spring Force at Switching Travel | 0.20/ 0.45/ 0.75/ 1.00/ 1.60/ 3.60/ 3.60/ 4.40/ 4.80/ 5.40/ 5.20/ 8.00/ 7.60 N |

| ELECTRICAL DATA | |
|---|---|
| **Receptacle-Plunger** | |
| Max. Current Rating | 5.0 A |
| Typical Continuity Resistance | ≤ 15 mOhm |
| **Pin-Plunger** | |
| Max. Current Rating | 1.0 A |
| Typical Continuity Resistance | ≤ 50 mOhm |
| Typical Insulating Voltage | 1000 V |

| MATERIALS | |
|---|---|
| Barrel | Brass, gold-plated |
| Spring | Spring Steel, gold-plated |
| Plunger | Steel, CuBe |
| Receptacle | Brass, gold-plated |

| RECOMMENDED DIAMETER OF DRILL | |
|---|---|
| **H 3011/GWR5 (/R /RK)** | |
| HP 2361.1 (Trolitax) | 3.02 mm |
| HGW 2372 (Glass filled material) | 3.04 mm |
| **H 3011/K (/5K)** | |
| HP 2361.1 (Trolitax) | 3.01 mm |
| HGW 2372 (Glass filled material) | 3.02 mm |

| AVAILABLE SCREW TOOLS | |
|---|---|
| **Article Designation** | **max. Tip-∅** |
| WFSB 3012/G-S1.8 | all |
| WFSB 3012-4.0-2.6 | 2.6 |

**Receptacles see page 147**

## TIP STYLE · DIAMETER · PLATING




| C | CK | CL | C5 | F |
|---|---|---|---|---|
| 3.00C Au<br>4.00C Au | 2.27C Au | 2.30C Au<br>3.00C Au | 1.00 Au | 3.00C Au<br>3.50C Au<br>4.00C Au<br>4.50C Au<br>5.00C Au<br>5.50C Au<br>5.90C Au |



| FL | F1 | F1L |
|---|---|---|
| 3.00C Au<br>3.50C Au<br>4.00C Au<br>4.50C Au | 2.30 HTK<br>3.00 HTK<br>3.50 HTK<br>4.00 HTK<br>4.50 HTK<br>5.00 HTK<br>5.50 HTK<br>5.90 HTK | 3.00 HTK<br>3.50 HTK<br>4.00 HTK<br>4.50 HTK<br>5.00 HTK<br>5.50 HTK<br>5.90 HTK |

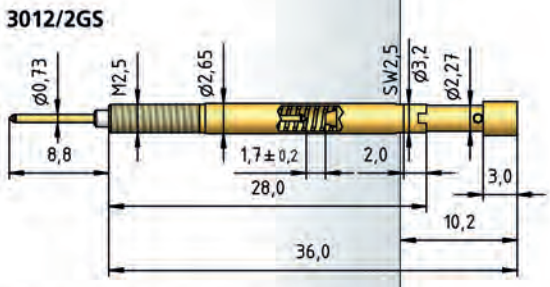








## HOW TO ORDER

| 3012/ | 2 | G | S | - | F | - | 1.8 N | - | Au | - | 3.0 | C |
|---|---|---|---|---|---|---|---|---|---|---|---|---|
| 1 | 2 | 3 | 4 | | 5 | | 6 | | 7 | | 8 | 9 |

1 Series 2 Collar Height 3 Threaded Design 4 Plug-in Connector 5 Tip Style
6 Spring Force 7 Tip Plating 8 Tip Diameter 9 Tip Material (only for CuBe)

L'IMPULSION
Retrouvez nous sur
www.limpulsion.fr

Switching Test Probe „Closer“ (NO) with Easy-Replacement System
138 mil / 3.5 mm

# Series 3012/2GS • FS1/FLS1

## TIP STYLE · DIAMETER · PLATING



| FS1 | FLS1 |
|---|---|
| 3.00C Au/CB | 3.00C Au/CB |
| 3.50C Au/CB | 3.50C Au/CB |
| 4.00C Au/CB | 4.50C Au/CB |
| 4.50C Au/CB | 5.00C Au/CB |
| 5.00C Au/CB | |
| 5.50C Au/CB | |
| 5.90C Au/CB | |

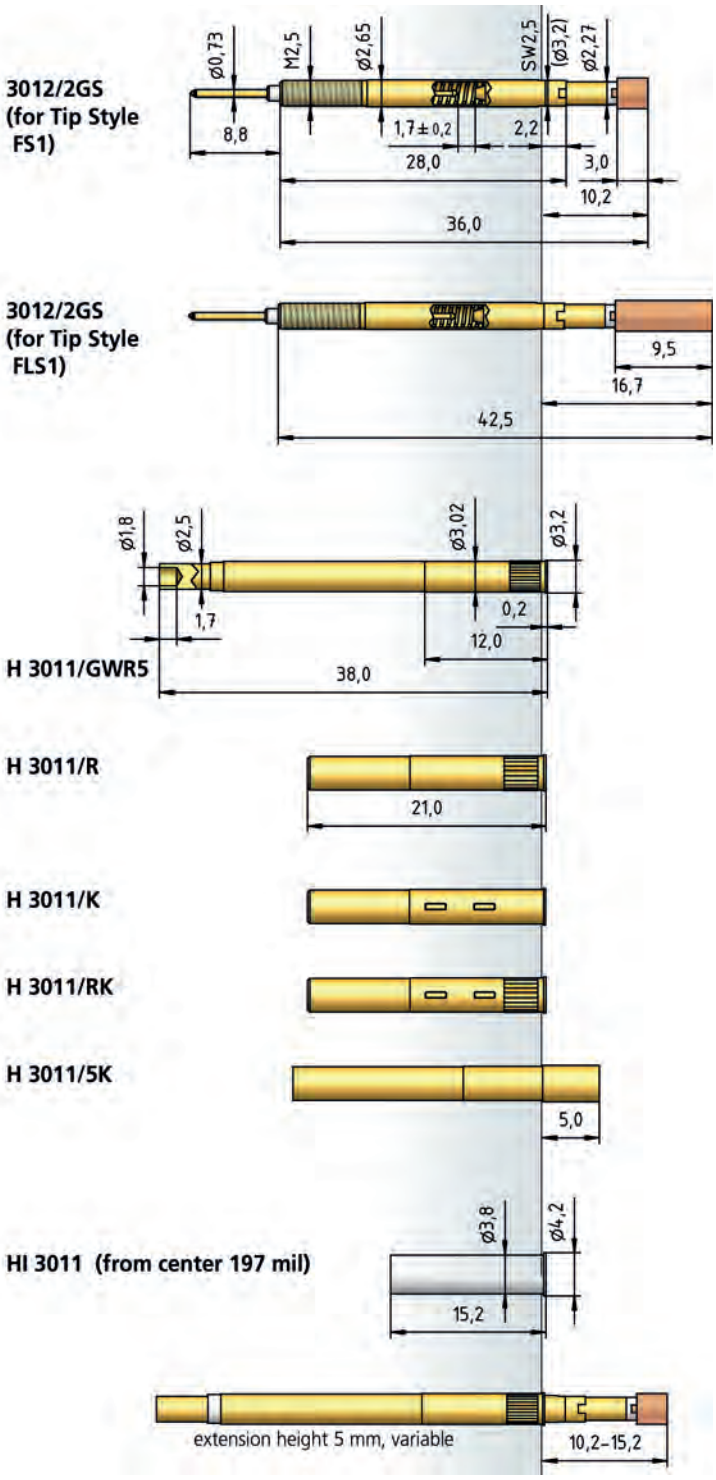


## BENEFIT

- Switching test probe for the cable harness test and presence verification
- Easy-replacement system (replacement without soldering)
- Switching test probe „Closer“ (NO) type
- Variable extention height
- Version for large tip diameters
- Tips insulated
- Switching travel 4.0 mm on request
- High soldering temperature up to 300°C

## MECHANICAL DATA

| | |
|---|---|
| Center | 3.50 mm / 138 mil |
| Temperature Range | -30 °C - +120 °C |
| Full Travel | 4.50 mm |
| Working Travel | 4.00 mm |
| Switching Travel | 1.70 mm |
| Pre-Loaded Spring Force | 0.12/ 0.25/ 0.30/ 0.40/ 0.60/ 1.80/ 1.40/ 1.70/ 2.00/ 2.70/ 2.00/ 5.00/ 4.00 N |
| Spring Force at Working Travel | 0.75/ 1.25/ 1.80/ 2.30/ 3.50/ 6.50/ 7.00/ 8.50/ 9.00/ 9.50/ 10.00/ 12.50/ 13.00 N |
| Spring Force at Switching Travel | 0.20/ 0.45/ 0.75/ 1.00/ 1.60/ 3.60/ 3.60/ 4.40/ 4.80/ 5.40/ 5.20/ 8.00/ 7.60 N |

## ELECTRICAL DATA

| | |
|---|---|
| **Receptacle-Plunger** | |
| Max. Current Rating | 5.0 A |
| Typical Continuity Resistance | ≤ 15 mOhm |
| **Pin-Plunger** | |
| Max. Current Rating | 1.0 A |
| Typical Continuity Resistance | ≤ 50 mOhm |
| Typical Insulating Voltage | 1000 V |

## MATERIALS

| | |
|---|---|
| Barrel | Brass, gold-plated |
| Spring | Spring Steel, gold-plated |
| Plunger | CuBe, gold-plated |
| Tip | CuBe, passiviert |
| Receptacle | Brass, gold-plated |

## RECOMMENDED DIAMETER OF DRILL

| | |
|---|---|
| **H 3011/GWR5 (/R /RK)** | |
| HP 2361.1 (Trolitax) | 3.02 mm |
| HGW 2372 (Glass filled material) | 3.04 mm |
| **H 3011/K (/5K)** | |
| HP 2361.1 (Trolitax) | 3.01 mm |
| HGW 2372 (Glass filled material) | 3.02 mm |

## AVAILABLE SCREW TOOLS

| **Article Designation** | **max. Tip-∅** |
|---|---|
| WFSB 3012/G-S1.8 | all |

## HOW TO ORDER

| 3012/ | 2 | G | S | - | FS1 | - | 3.0 N | - | Au/CB | - | 3.0 | C |
|---|---|---|---|---|---|---|---|---|---|---|---|---|
| 1 | 2 | 3 | 4 | | 5 | | 6 | | 7 | | 8 | 9 |

1 Series 2 Collar Height 3 Threaded Design 4 Plug-in Connector 5 Tip Style
6 Spring Force 7 Tip Plating 8 Tip Diameter 9 Tip Material (only for CuBe)

11

L'IMPULSION Retrouvez nous sur www.limpulsion.fr

NEW

# Series 3012/2GSL

Switching Test Probe „Closer“ (NO) with Easy-Replacement System
138 mil / 3.5 mm

| BENEFIT | |
|---|---|
| Test Probe with switching function for cable harness test and presence verification | |
| Easy-replacement system (replacement without soldering) | |
| Switching test probe „Closer“ (NO) type | |
| Variable extention height | |
| Version for large tip diameters | |
| Long full travel | |
| High soldering temperature up to 300°C | |
| **MECHANICAL DATA** | |
| Center | 3.50 mm / 138 mil |
| Temperature Range | -30 °C - +120 °C |
| Full Travel | 11.00 mm |
| Working Travel | 9.00 mm |
| Switching Travel | 1.70 mm |
| Pre-Loaded Spring Force | 0.40 N |
| Spring Force at Working Travel | 2.00 N |
| Spring Force at Switching Travel | 0.60 N |
| **ELECTRICAL DATA** | |
| **Receptacle-Plunger** | |
| Max. Current Rating | 10.0 A |
| Typical Continuity Resistance | ≤ 15 mOhm |
| **Pin-Plunger** | |
| Max. Current Rating | 1.0 A |
| Typical Continuity Resistance | ≤ 50 mOhm |
| Typical Insulating Voltage | 1000 V |
| **MATERIALS** | |
| Barrel | Brass, gold-plated |
| Spring | Spring Steel, gold-plated |
| Plunger | CuBe |
| Receptacle | Brass, gold-plated |
| **RECOMMENDED DIAMETER OF DRILL** | |
| **H 3011/GWR5 (/R /RK)** | |
| HP 2361.1 (Trolitax) | 3.02 mm |
| HGW 2372 (Glass filled material) | 3.04 mm |
| **H 3011/K (/5K)** | |
| HP 2361.1 (Trolitax) | 3.01 mm |
| HGW 2372 (Glass filled material) | 3.02 mm |
| **AVAILABLE SCREW TOOLS** | |
| **Article Designation** | **max. Tip-∅** |
| WFSB 3012/G-S1.8 | all |

**TIP STYLE · DIAMETER · PLATING**

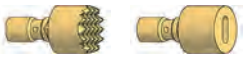

| C | F |
|---|---|
| 3.50C Au | 3.50C Au |

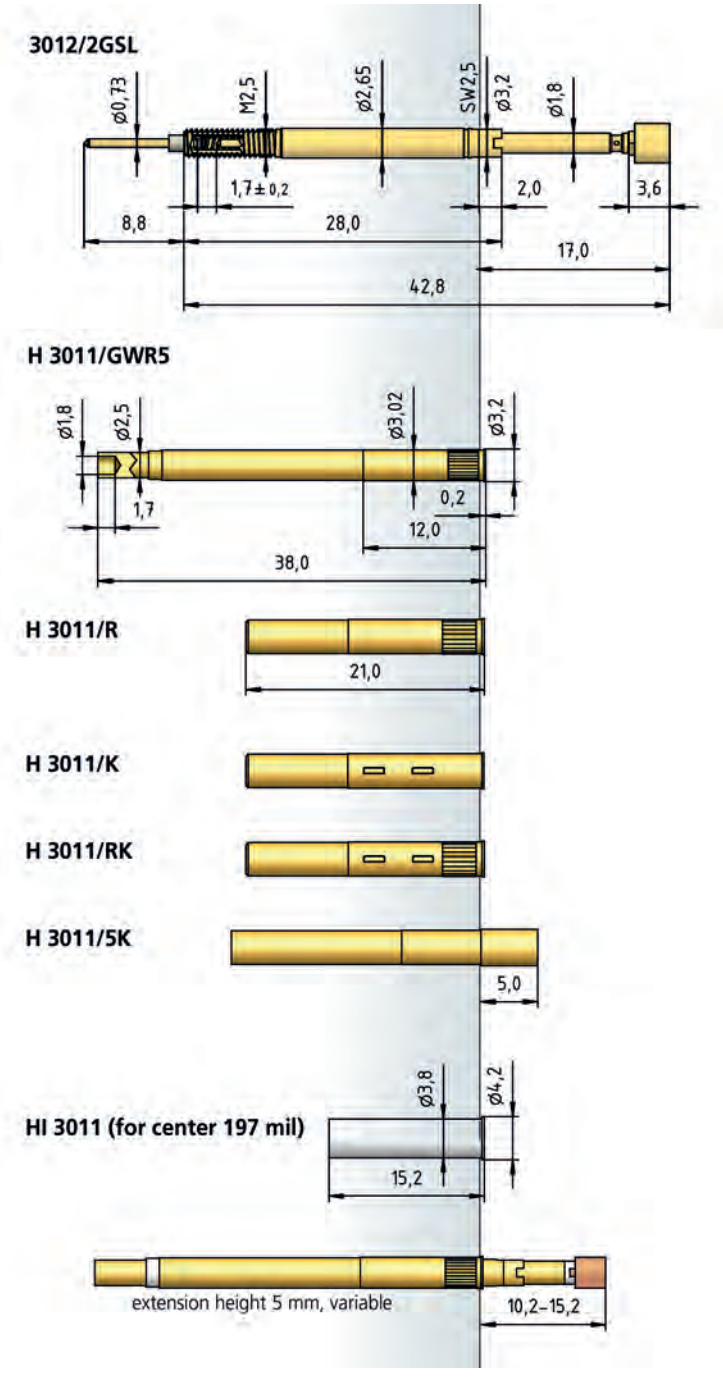


## HOW TO ORDER

| 3012/ | 2 | G | S | L | - | F | - | 1.8 N | - | Au | - | 3.0 | C |
|---|---|---|---|---|---|---|---|---|---|---|---|---|---|
| 1 | 2 | 3 | 4 | 5 | | 6 | | 7 | | 8 | | 9 | 10 |

1 Series 2 Collar Height 3 Threaded Design 4 Plug-in Connector
5 Long Travel 6 Tip Style 7 Spring Force 8 Tip Plating 9 Tip Diameter
10 Tip Material (only for CuBe)

L'IMPULSION
Retrouvez nous sur
www.limpulsion.fr

# Switching Test Probe „Closer“ (NO) with Easy-Replacement System
160 mil / 4.0 mm

## Series 3014/2G

### TIP STYLE · DIAMETER · PLATING



| A | C | C | F | F |
|---|---|---|---|---|
| 3.00C Au | 1.00C Au | 2.00C Au<br>3.00C Au | 1.00C Au | 2.00C Au<br>3.00C Au |



| F1 |
|---|
| 2.00 HTK<br>3.00 HTK |

| BENEFIT |
|---|
| Switching test probe for the cable harness test and presence verification |
| Easy-replacement system (replacement without soldering) |
| Switching test probe „Closer“ (NO) type |
| Short design |
| High soldering temperature up to 300°C |

| MECHANICAL DATA | |
|---|---|
| Center | 4.00 mm / 160 mil |
| Temperature Range | -30 °C - +120 °C |
| Full Travel | 5.00 mm |
| Working Travel | 4.00 mm |
| Switching Travel | 1.70 mm |
| Pre-Loaded Spring Force | 0.50 N |
| Spring Force at Working Travel | 1.50 N |
| Spring Force at Switching Travel | 0.90 N |

| ELECTRICAL DATA | |
|---|---|
| **Receptacle-Plunger** | |
| Max. Current Rating | 3.0 A |
| Typical Continuity Resistance | ≤ 20 mOhm |
| **Pin-Plunger** | |
| Max. Current Rating | 1.0 A |
| Typical Continuity Resistance | ≤ 40 mOhm |
| Typical Insulating Voltage | 1000 V |

| MATERIALS | |
|---|---|
| Barrel | Brass, gold-plated |
| Spring | Spring Steel, gold-plated |
| Plunger | CuBe |
| Receptacle | Brass, gold-plated |

| RECOMMENDED DIAMETER OF DRILL | |
|---|---|
| HP 2361.1 (Trolitax) | 3.50 mm |
| HGW 2372 (Glass filled material) | 3.51 mm |

| AVAILABLE SCREW TOOLS | |
|---|---|
| **Article Designation** | **max. Tip-∅** |
| WFSB 1060/G-4.0-3.0 | 3.0 |
| WFSB 1060/G-5.0-4.0-Z | 4.0 |
| WFSB 1060/G-6.0-5.0-Z | 5.0 |

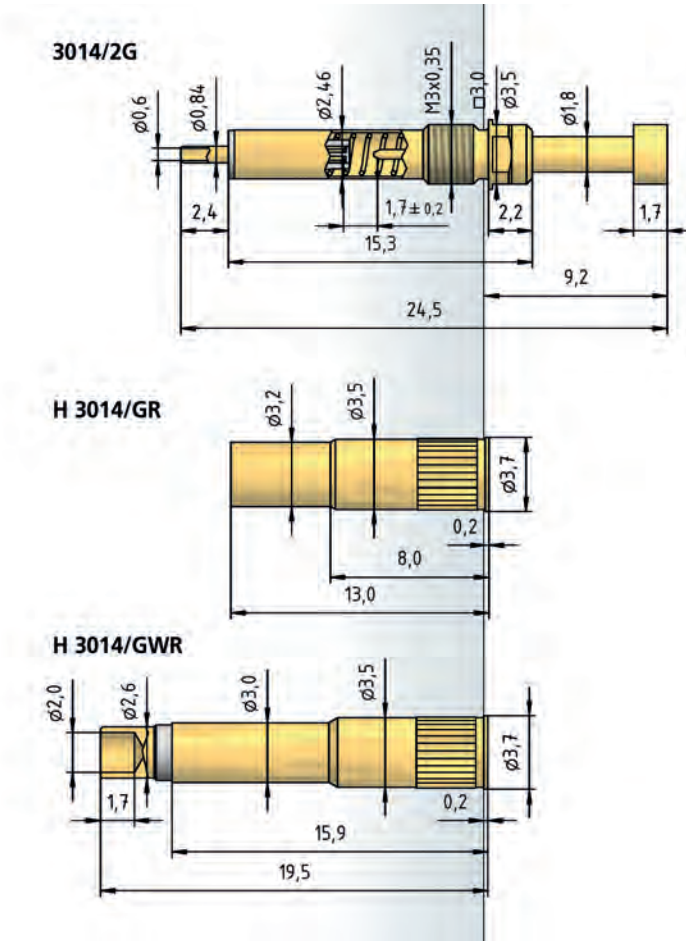


### HOW TO ORDER

| 3014/ | 2 | G | - | A | - | 1.5 N | - | Au | - | 3.0 | C |
|---|---|---|---|---|---|---|---|---|---|---|---|
| 1 | 2 | 3 | | 4 | | 5 | | 6 | | 7 | 8 |

1 Series 2 Collar Height 3 Threaded Design 4 Tip Style 5 Spring Force
6 Tip Plating 7 Tip Diameter 8 Tip Material (only for CuBe)



L'IMPULSION Retrouvez nous sur www.limpulsion.fr

NEW

# Series 3212/2GS

Switching Test Probe „OFF-ON-OFF“ with Easy-Replacement System
138 mil / 3.5 mm

| BENEFIT | |
|---|---|
| Switching test probe for the cable harness test and presence verification | |
| Easy-replacement system (replacement without soldering) | |
| Switching test probe „OFF-ON-OFF“ type | |
| High soldering temperature up to 300°C | |
| **MECHANICAL DATA** | |
| Center | 3.50 mm / 138 mil |
| Temperature Range | -30 °C - +120 °C |
| Full Travel | 5.00 mm |
| Working Travel | 4.00 mm |
| Rated Travel | 3.00 mm |
| Switching Travel ON | 2.50 mm |
| Switching Travel OFF | 3.50 mm |
| Pre-Loaded Spring Force | 0.60 N |
| Spring Force at Working Travel | 3.00 N |
| Spring Force at Rated Travel | 2.40 N |
| Spring Force at Switching Travel ON | 2.10 N |
| Spring Force at Switching Travel OFF | 2.75 N |
| **ELECTRICAL DATA** | |
| **Receptacle-Plunger** | |
| Max. Current Rating | 3.0 A |
| Typical Continuity Resistance | ≤ 20 mOhm |
| **Pin-Plunger** | |
| Max. Current Rating | 1.0 A |
| Typical Continuity Resistance | ≤ 40 mOhm |
| Typical Insulating Voltage | 1000 V |
| **MATERIALS** | |
| Barrel | Brass, gold-plated |
| Spring | Spring Steel, gold-plated |
| Plunger | CuBe |
| Receptacle | Brass, gold-plated |
| **RECOMMENDED DIAMETER OF DRILL** | |
| **H 3011/GWR5 (/R /RK)** | |
| HP 2361.1 (Trolitax) | 3.02 mm |
| HGW 2372 (Glass filled material) | 3.04 mm |
| **H 3011/K (/5K)** | |
| HP 2361.1 (Trolitax) | 3.01 mm |
| HGW 2372 (Glass filled material) | 3.02 mm |
| **AVAILABLE SCREW TOOLS** | |
| **Article Designation** | **max. Tip-∅** |
| WFSB 3012/G-S1.8 | all |
| WFSB 3012/G-4.0-2.6 | 2.6 |
| WFSB 3012/G-4.0-3.0-Z | 3.0 |

**TIP STYLE · DIAMETER · PLATING**



| C |
|---|
| 2.00C Au |
| 3.00C Au |

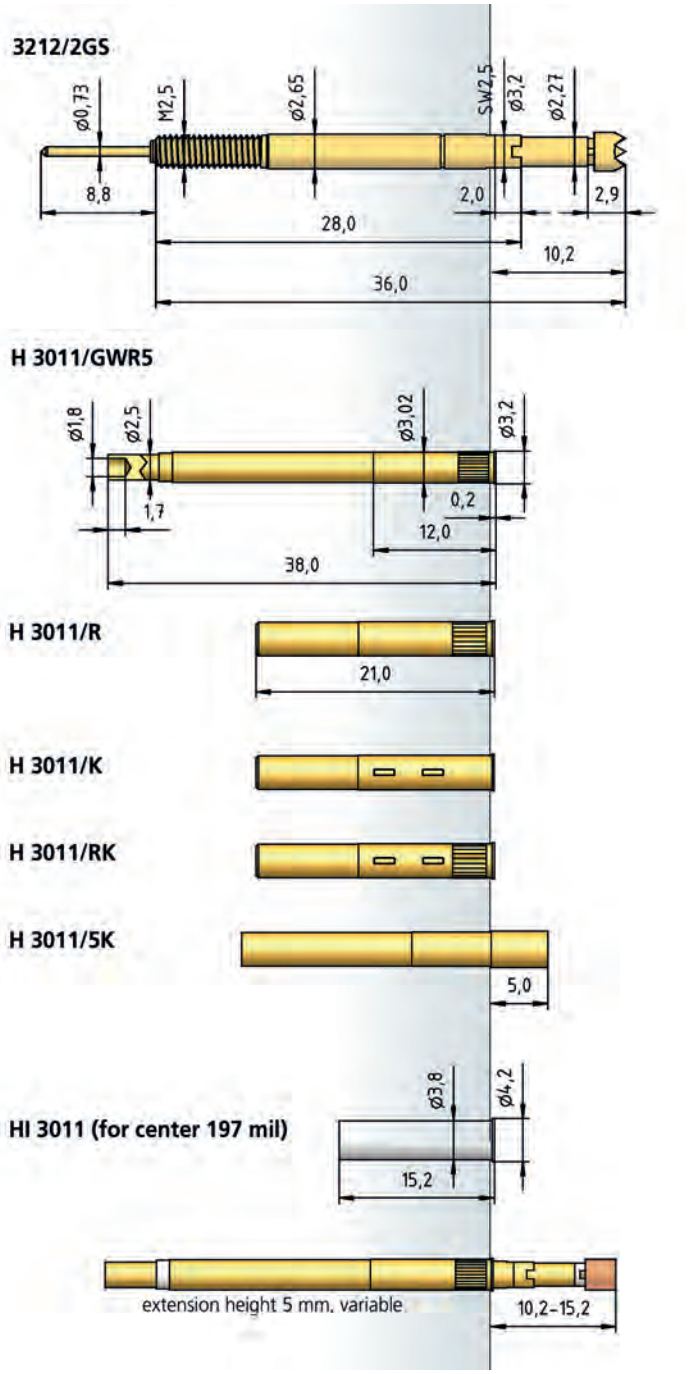


## HOW TO ORDER

| 3212/ | 2 | G | S | - | C | - | 3.0 N | - | Au | - | 2.0 | C |
|---|---|---|---|---|---|---|---|---|---|---|---|---|
| 1 | 2 | 3 | 4 | | 5 | | 6 | | 7 | | 8 | 9 |

1 Series 2 Collar Height 3 Threaded Design 4 Plug-in Connector 5 Tip Style
6 Spring Force 7 Tip Plating 8 Tip Diameter 9 Tip Material (only for CuBe)

L'IMPULSION Retrouvez nous sur www.limpulsion.fr

# Switching Test Probe „OFF-ON-OFF“ with Easy-Replacement System 160 mil / 4.0 mm

# Series 3214/2GW

## TIP STYLE · DIAMETER · PLATING



| C | F |
|---|---|
| 2.00C Au | 3.00C Au |

## BENEFIT

- Switching test probe for the cable harness test and presence verification
- Easy-replacement system (replacement without soldering)
- Switching test probe "OFF-ON-OFF" type
- Short design
- High soldering temperature up to 300°C

## MECHANICAL DATA

| | |
|---|---|
| Center | 4.00 mm / 160 mil |
| Temperature Range | -30 °C - +120 °C |
| Full Travel | 5.00 mm |
| Working Travel | 4.00 mm |
| Rated Travel | 3.00 mm |
| Switching Travel ON | 2.50 mm |
| Switching Travel OFF | 3.50 mm |
| Pre-Loaded Spring Force | 1.00 N |
| Spring Force at Working Travel | 3.00 N |
| Spring Force at Rated Travel | 2.50 N |
| Spring Force at Switching Travel ON | 2.25 N |
| Spring Force at Switching Travel OFF | 2.75 N |

## ELECTRICAL DATA

| | |
|---|---|
| **Receptacle-Plunger** | |
| Max. Current Rating | 3.0 A |
| Typical Continuity Resistance | ≤ 20 mOhm |
| **Pin-Plunger** | |
| Max. Current Rating | 1.0 A |
| Typical Continuity Resistance | ≤ 40 mOhm |
| Typical Insulating Voltage | 1000 V |

## MATERIALS

| | |
|---|---|
| Barrel | Brass, gold-plated |
| Spring | Spring Steel, gold-plated |
| Plunger | CuBe |
| Receptacle | Brass, gold-plated |

## RECOMMENDED DIAMETER OF DRILL

| | |
|---|---|
| HP 2361.1 (Trolitax) | 3.50 mm |
| HGW 2372 (Glass filled material) | 3.51 mm |

## AVAILABLE SCREW TOOLS

| **Article Designation** | **max. Tip-∅** |
|---|---|
| WFSB 1060/G-4.0-3.0 | 3.0 |

**3214/2GW**

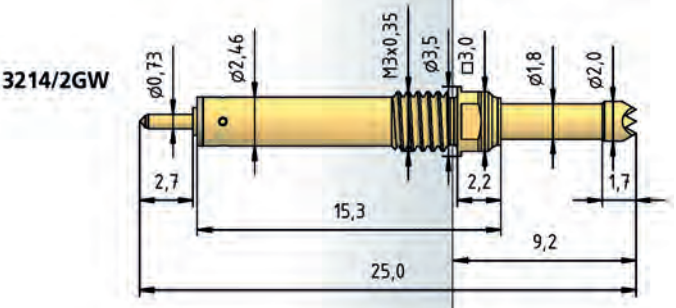


**H 3214/GWR**

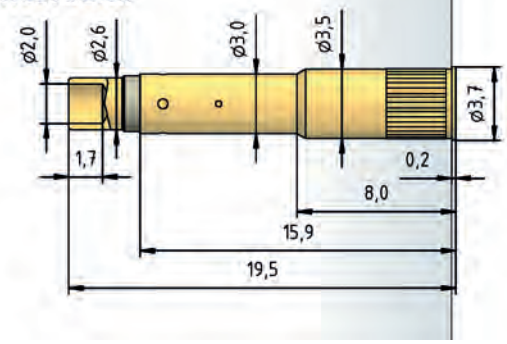


## HOW TO ORDER

| 3214/ | 2 | G | W | - | C | - | 3.0 N | - | Au | - | 2.0 | C |
|---|---|---|---|---|---|---|---|---|---|---|---|---|
| 1 | 2 | 3 | 4 | | 5 | | 6 | | 7 | | 8 | 9 |

1 Series 2 Collar Height 3 Threaded Design 4 Interchangeable without Soldering 5 Tip Style 6 Spring Force 7 Tip Plating 8 Tip Diameter 9 Tip Material (only for CuBe)

L'IMPULSION Retrouvez nous sur www.limpulsion.fr

# Series 3015/G

## Ball-Head Switching Test Probe „Closer“ (NO) 300 mil / 7.5 mm

| BENEFIT |
|---|
| Ball-head switching test probe for presence detection with side activation |
| Threaded type |
| Precision ball plunger guide |
| Outer housing neutral (insulated of the electrical circuit) |

| MECHANICAL DATA | |
|---|---|
| Center | 7.50 mm / 300 mil |
| Temperature Range | -30 °C - +120 °C |
| Full Travel | 1.00 mm |
| Working Travel | 0.80 mm |
| Switching Travel | 0.50 mm |
| Pre-Loaded Spring Force | 0.50 N |
| Spring Force at Working Travel | 0.70 N |
| Spring Force at Switching Travel | 0.60 N |

| ELECTRICAL DATA | |
|---|---|
| Max. Current Rating | 1.0 A |
| Typical Continuity Resistance | ≤ 25 mOhm |
| Typical Insulating Voltage | 1000 V |

| MATERIALS | |
|---|---|
| Barrel | Brass, gold-plated |
| Spring | Spring Steel, gold-plated |
| Plunger | Steel |
| Receptacle | Brass, gold-plated |

| RECOMMENDED DIAMETER OF DRILL | |
|---|---|
| HP 2361.1 (Trolitax) | 6.75...6.80 mm |

| AVAILABLE SCREW TOOLS | |
|---|---|
| **Article Designation** | **max. Tip-∅** |
| WFSB 3015/G-7.0 | 5.0 |

### TIP STYLE · DIAMETER · PLATING



| D |
|---|
| 4.00 Ni |

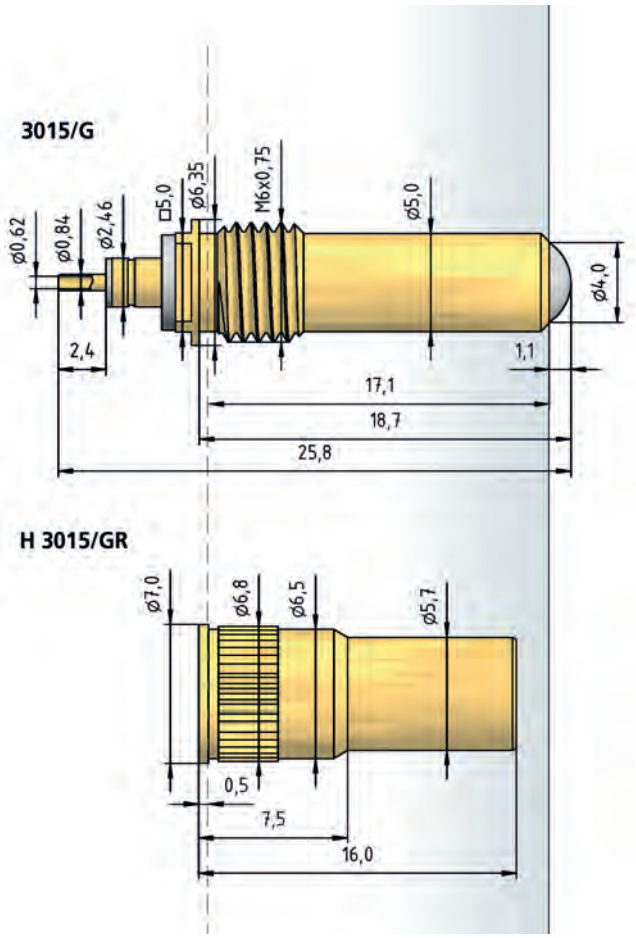


## HOW TO ORDER

| 3015/ | G | - | D | - | 0.7 N | - | Ni | - | 4.0 |
|---|---|---|---|---|---|---|---|---|---|
| 1 | 2 | | 3 | | 4 | | 5 | | 6 |

1 Series 2 Threaded Design 3 Tip Style 4 Spring Force 5 Tip Plating 6 Tip Diameter

L'IMPULSION
Retrouvez nous sur
www.limpulsion.fr

# PUSH-BACK TEST PROBES

**Push-Back Test Probes are used for the contacting of connectors when a "catch test" is necessary.**

In this case, a defined high force is applied to the stop parts in order to check correct seating inside the connector or to check that the connector is locked in position. All types are designed as switching test probes. Stop parts which are not locked in position are pushed out by the pressure from the connector, and the push-back test probe does not switch or give a signal.

Push-Back Test Probes are available for centers of 4.0 mm and 2.54 mm and with contact pressures of up to 25 N. Series 5104, 5265 and 3028 are especially effective for these uses. Their modular design gives them a wide range of applications. Of course, solder-free replacement of the test probes is an integral part of the easy-replacement system.

L'IMPULSION
Retrouvez nous sur
www.limpulsion.fr

| SERIES | CENTER | PAGE |
|---|---|---|
| 3028.01 | 100 mil / 2.54 mm | 156 |
| 5203 | 100 mil / 2.54 mm | 157 |
| 5265 | 118 mil / 3.00 mm | 158 |
| 5087 | 160 mil / 4.00 mm | 159 |
| 5104 | 160 mil / 4.00 mm | 160 |





L'IMPULSION
Retrouvez nous sur
www.limpulsion.fr

# Series 3028.01

Push-Back Test Probe, non-rotating 100 mil / 2.54 mm

| BENEFIT |
|---|
| Push-back test probe for the cable harness test |
| Especially suitable for spade-shaped tip style |
| Non-rotating variant |
| Receptacle can be extended with switching element optional |
| Soldering temperature max 300°C |

| MECHANICAL DATA | |
|---|---|
| Center | 2.54 mm / 100 mil |
| Temperature Range | -30 °C - +120 °C |
| Full Travel | 5.00 mm |
| Working Travel | 4.00 mm |
| Switching Travel | 2.60 mm |
| Pre-Loaded Spring Force | 1.00/ 2.20/ 4.00 N |
| Spring Force at Switching Travel | 3.10/ 6.80/ 10.70 N |
| Spring Force at Working Travel (without Switching Element) | 4.30/ 9.30/ 14.30 N |
| Spring Force at Working Travel (with Switching Element) | +0.70 N |

| ELECTRICAL DATA | |
|---|---|
| **Receptacle-Plunger** | |
| Max. Current Rating | 3.0 A |
| Typical Continuity Resistance | ≤ 20 mOhm |
| **Pin-Plunger** | |
| Max. Current Rating | 1.0 A |
| Typical Continuity Resistance | ≤ 50 mOhm |
| Typical Insulating Voltage | 1000 V |

| MATERIALS | |
|---|---|
| Barrel | Brass, gold-plated |
| Spring | Spring Steel, gold-plated |
| Plunger | Steel |
| Receptacle | Brass, gold-plated |

| RECOMMENDED DIAMETER OF DRILL | |
|---|---|
| HP 2361.1 (Trolitax) | 2.10 mm |
| HGW 2372 | 2.11 mm |

| AVAILABLE SCREW TOOLS | |
|---|---|
| **Article Designation** | **max. Tip-∅** |
| WFSB 1021/G-2.54-1.8 | 1.8 |
| WFSB 1021/G-2.54-2.0 | 2.0 |
| WFSB 1021/G-3.5-3.0-Z | 3.0 |
| WFSB 1021/G-C2S-3.0-2.5-Z | 2.5 |

## TIP STYLE · DIAMETER · PLATING

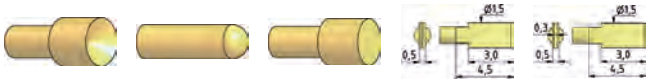

| A | D2 | F | Y | Y3 |
|---|---|---|---|---|
| 1.50 Au<br>2.00 Au | 0.80 Au | 1.30 Au | 1.50x0.50 Au | 1.50x0.50 Au |

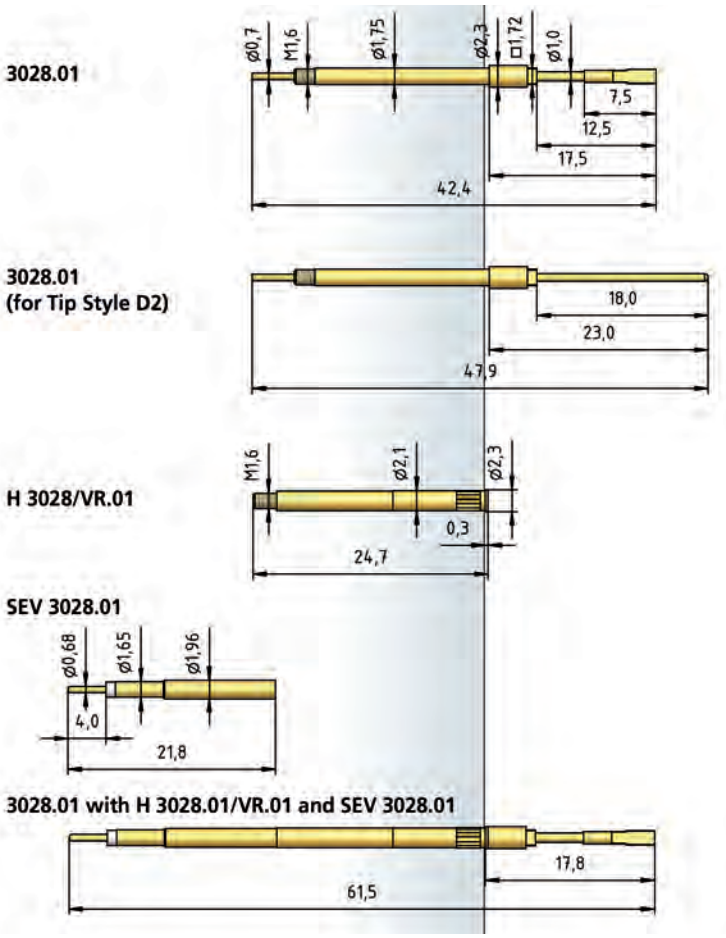


## HOW TO ORDER

| 3028 | .01 | - | Y | - | 15.0 N | - | Au | - | 1.5x | 0.5 |
|---|---|---|---|---|---|---|---|---|---|---|
| 1 | 2 | | 3 | | 4 | | 5 | | 6 | 7 |

1 Series 2 Variant 3 Tip Style 4 Spring Force 5 Tip Plating 6 Tip Diameter 7 Tip Thickness

L'IMPULSION
Retrouvez nous sur
www.limpulsion.fr

# Push-Back Test Probe, non-rotating 100 mil / 2.54 mm

# Series 5203

## TIP STYLE · DIAMETER · PLATING



| A | D | F | Y | Y |
|---|---|---|---|---|
| 1.90C Au<br>2.20C Au | 1.20C Au<br>2.50C Au | 1.50C Au<br>1.80C Au | 1.90x0.30C Au | 1.90x0.36C Au |



| Y | Y | Y |
|---|---|---|
| 1.90x0.50C Au | 1.90x0.80C Au | 2.50x0.80C Au |

## BENEFIT

- Push-back test probe for the cable harness test
- Especially suitable for spade-shaped tip style
- Non-rotating variant
- Receptacle with switch function

## MECHANICAL DATA

| | |
|---|---|
| Center | 2.54 mm / 100 mil |
| Temperature Range | -30 °C - +120 °C |
| Full Travel | 5.50 mm |
| Working Travel | 5.00 mm |
| Switching Travel | 2.50 mm |
| Pre-Loaded Spring Force | 1.20 N |
| Spring Force at Switching Travel | 5.60/ 8.10 N |
| Spring Force at Working Travel (without Switching Element) | 10.00/ 15.00 N |
| Spring Force at Working Travel (with Switching Element) | +0.60 N |

## ELECTRICAL DATA

| | |
|---|---|
| Max. Current Rating | 5.0 A |
| Typical Continuity Resistance | ≤ 30 mOhm |

## MATERIALS

| | |
|---|---|
| Spring | Spring Steel, gold-plated |
| Plunger | CuBe |
| Receptacle | Brass, gold-plated |

## RECOMMENDED DIAMETER OF DRILL

| | |
|---|---|
| HP 2361.1 (Trolitax) | 2.20 mm |

*(Tolerances dependent on carrier material, test drilling is recommended)*

## AVAILABLE SCREW TOOLS

| Article Designation | max. Tip-∅ |
|---|---|
| WFSB 5203-2.54-2.0 | 2.0 |
| WFSB 5203-3.5-2.7-Z | 2.7 |

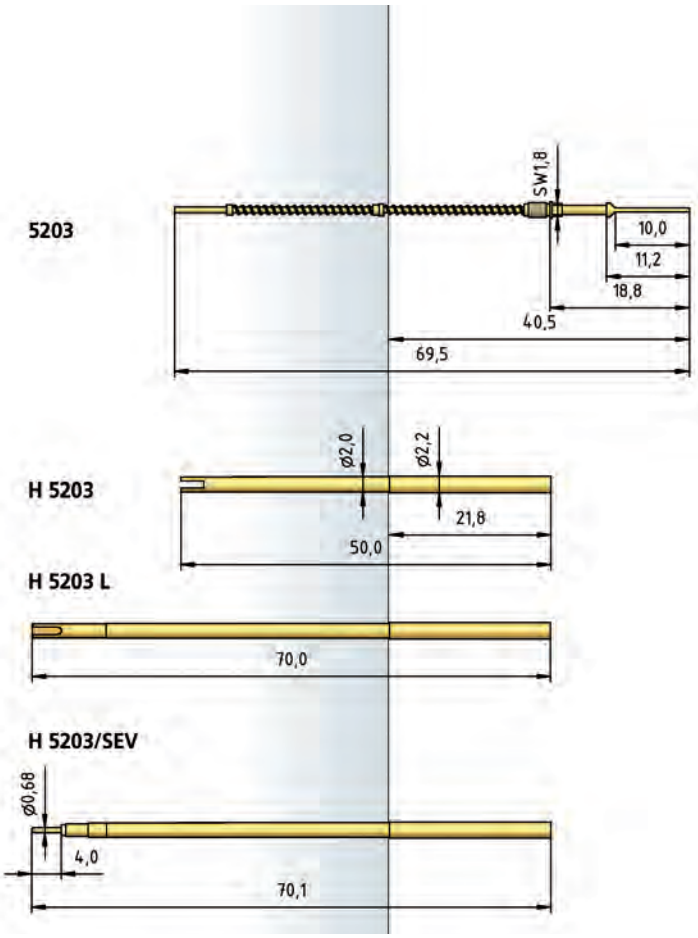


## HOW TO ORDER

| 5203 | - | Y | - | 10.0 N | - | Au | - | 1.9x | 0.3 | C |
|---|---|---|---|---|---|---|---|---|---|---|
| 1 | | 2 | | 3 | | 4 | | 5 | 6 | 7 |

1 Series 2 Tip Style 3 Spring Force 4 Tip Plating 5 Tip Diameter
6 Tip Thickness 7 Tip Material (only for CuBe)



L'IMPULSION Retrouvez nous sur www.limpulsion.fr

# Series 5265

Push-Back Test Probe, non-rotating 118 mil / 3.0 mm

| BENEFIT | |
|---|---|
| Push-back test probe for the cable harness test | |
| Especially suitable for spade-shaped tip style | |
| Non-rotating variant | |
| Receptacle with switch function | |

| MECHANICAL DATA | |
|---|---|
| Center | 3.00 mm / 118 mil |
| Temperature Range | -30 °C - +120 °C |
| Full Travel | 5.50 mm |
| Working Travel | 5.00 mm |
| Switching Travel | 2.60 mm |
| Pre-Loaded Spring Force | 1.00/ 2.00/ 3.00/ 3.80 N |
| Spring Force at Switching Travel | 3.10/ 6.20/ 9.20/ 12.20 N |
| Spring Force at Working Travel (without Switching Element) | 5.00/ 10.00/ 15.00/ 20.00 N |
| Spring Force at Working Travel (with Switching Element) | +1.00 N |

| ELECTRICAL DATA | |
|---|---|
| **Barrel-Probe Tip** | |
| Max. Current Rating | 8.0 A |
| Typical Continuity Resistance | ≤ 30 mOhm |
| **Connector Probe Tip** | |
| Max. Current Rating | 1.0 A |
| Typical Continuity Resistance | ≤ 50 mOhm |
| Typical Insulating Voltage | 1000 V |

| MATERIALS | |
|---|---|
| Barrel | Brass, gold-plated |
| Spring | Spring Steel, gold-plated |
| Plunger | CuBe |
| Receptacle | Brass, gold-plated |

| RECOMMENDED DIAMETER OF DRILL | |
|---|---|
| HP 2361.1 (Trolitax) | 2.49...2.51 mm |
| *(Tolerances dependent on carrier material, test drilling is recommended)* | |

| AVAILABLE SCREW TOOLS | |
|---|---|
| **Article Designation** | **max. Tip-∅** |
| WFSB 5265-3.0-2.3 | 2.3 |
| WFSB 5265-3.0-2.5-Z | 2.5 |
| WFSB 5265-3.5-3.0-Z | 3.0 |

## TIP STYLE · DIAMETER · PLATING



| C | F | Y | Y | Y |
|---|---|---|---|---|
| 2.00C Au<br>2.70C Au<br>3.00C Au | 1.50C Au<br>1.80C Au<br>2.30C Au<br>3.00C Au | 1.90x0.50C Au | 1.90x0.80C Au | 2.20x1.20C Au |

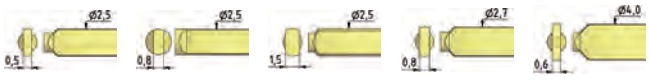

| Y | Y | Y | Y | YL |
|---|---|---|---|---|
| 2.50x0.50C Au | 2.50x0.80C Au | 2.50x1.50C Au | 2.70x0.80C Au | 4.00x0.60C Au |

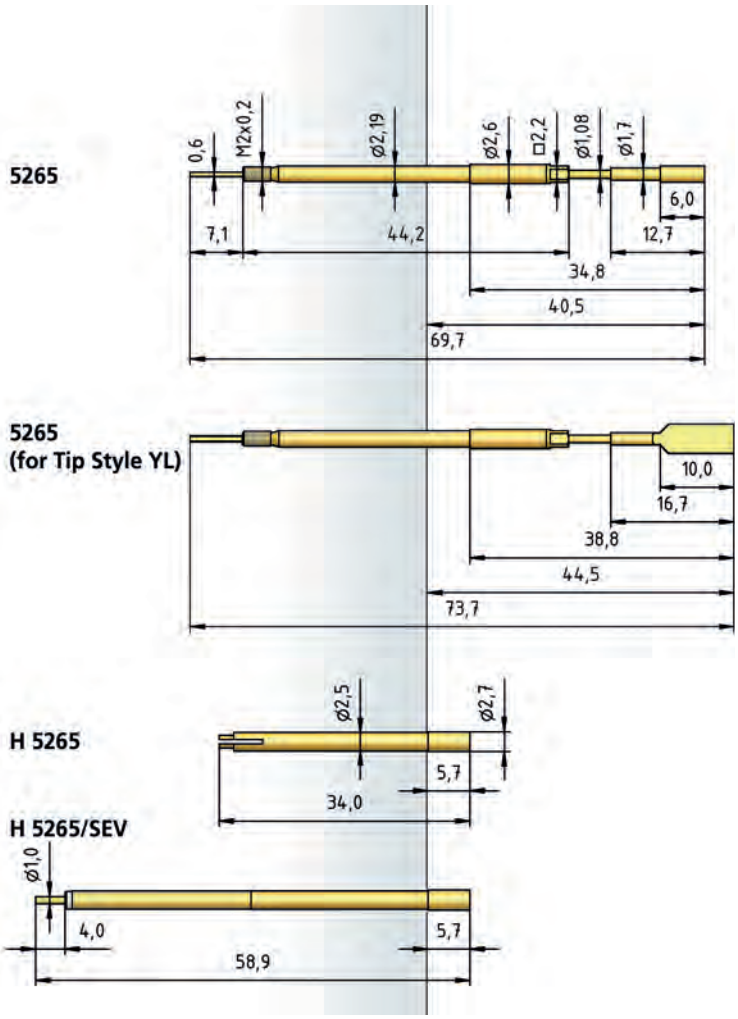


## HOW TO ORDER

| 5265 | - | Y | - | 15.0 N | - | Au | - | 1.9x | 0.8 | C |
|---|---|---|---|---|---|---|---|---|---|---|
| 1 | | 2 | | 3 | | 4 | | 5 | 6 | 7 |

1 Series 2 Tip Style 3 Spring Force 4 Tip Plating 5 Tip Diameter
6 Tip Thickness 7 Tip Material (only for CuBe)

# Push-Back Test Probe 160 mil / 4.0 mm

# Series 5087

## TIP STYLE · DIAMETER · PLATING




| C | D | D5 | F | F5 |
|---|---|---|---|---|
| 2.30C Au<br>2.80C Au<br>3.00C Au<br>4.00C Au | 1.45C Au | 2.30C Au<br>3.00C Au | 1.00C Au<br>1.10C Au<br>1.40C Au | 1.80C Au<br>2.30C Au |




| F | FL |
|---|---|
| 1.80C Au | 1.30C Au<br>1.80C Au |

## BENEFIT

Push-back test probe for the cable harness test

Suitable when standard head styles are used

## MECHANICAL DATA

| | |
|---|---|
| Center | 4.00 mm / 160 mil |
| Temperature Range | -30 °C - +120 °C |
| Full Travel | 10.00 mm |
| Working Travel | 9.50 mm |
| Switching Travel | 7.50 mm |
| Pre-Loaded Spring Force | 1.50/ 2.00/ 4.00 N |
| Spring Force at Working Travel | 6.00/ 9.00/ 15.00 N |
| Spring Force at Switching Travel | 4.30/ 6.80/ 12.00 N |

## ELECTRICAL DATA

| | |
|---|---|
| **Barrel-Probe Tip** | |
| Max. Current Rating | 20.0 A |
| Typical Continuity Resistance | ≤ 3 mOhm |
| **Connector Probe Tip** | |
| Max. Current Rating | 1.0 A |
| Typical Continuity Resistance | ≤ 25 mOhm |
| Typical Insulating Voltage | 1000 V |

## MATERIALS

| | |
|---|---|
| Barrel | Brass, gold-plated |
| Spring | Spring Steel, gold-plated |
| Plunger | CuBe |

## RECOMMENDED DIAMETER OF DRILL

| | |
|---|---|
| HP 2361.1 (Trolitax) | 3.00 mm |

*(Tolerances dependent on carrier material, test drilling is recommended)*

## AVAILABLE SCREW TOOLS

| Article Designation | max. Tip-∅ |
|---|---|
| WFS 5087-4.0-2.5 | 2.5 |
| WFSB 5087-5.0-4.0-Z | 4.0 |

## TABLE CONNECTOR PIN

| Connector Pin ∅ X (mm) | Connector Pin Length Y (mm) |
|---|---|
| 0.5 | 6.0 |
| 1.0 | 2.5 |
| 1.0 | 4.0 |

**5087**

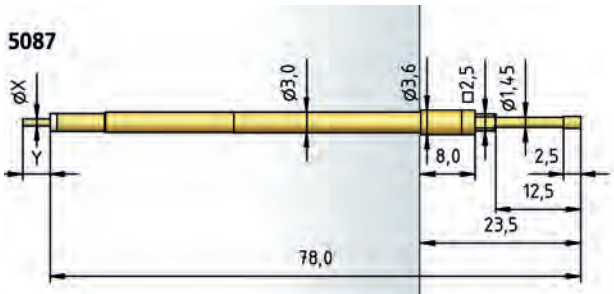


**5087 (for Tip Style FL)**

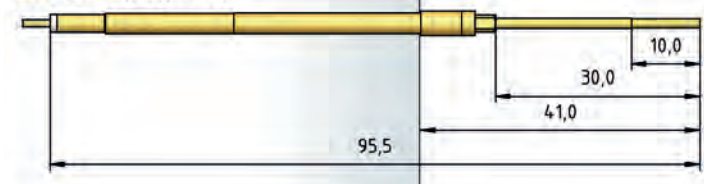


**5087 (for Tip Styles D5 / F5)**

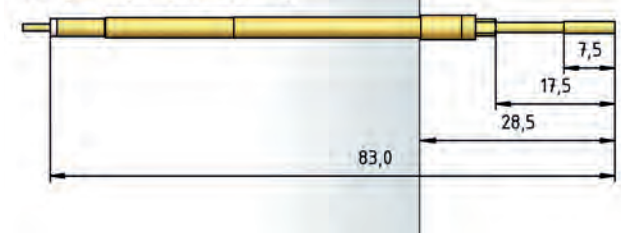


## HOW TO ORDER

| 5087 | - | F | - | 15.0 N | - | Au | - | 1.8 | C | /1.0x | 4.0 |
|---|---|---|---|---|---|---|---|---|---|---|---|
| 1 | | 2 | | 3 | | 4 | | 5 | 6 | 7 | 8 |

1 Series 2 Tip Style 3 Spring Force 4 Tip Plating 5 Tip Diameter
6 Tip Material (only for CuBe) 7 Connector Pin Diameter
8 Connector Pin Length

12

# Series 5104

Push-Back Test Probe, non-rotating 160 mil / 4.0 mm

| BENEFIT | |
|---|---|
| Push-back test probe for the cable harness test | |
| Especially suitable for spade-shaped tip style | |
| Non-rotating variant | |
| Receptacle with switch function | |
| **MECHANICAL DATA** | |
| Center | 4.00 mm / 160 mil |
| Temperature Range | -30 °C - +120 °C |
| Full Travel | 7.00 mm |
| Working Travel | 5.00 mm |
| Switching Travel | 3.50 mm |
| Pre-Loaded Spring Force | 0.50/ 1.00/ 1.50/ 3.00/ 4.00/ 3.00/ 4.50/ 5.00/ 4.00/ 9.00 N |
| Spring Force at Switching Travel | 0.70/ 3.80/ 4.65/ 7.90/ 9.10/ 11.40/ 13.95/ 15.50/ 18.70/ 23.70 N |
| Spring Force at Working Travel (without Switching Element) | 0.75/ 5.00/ 6.00/ 10.00/ 11.25/ 15.00/ 18.00/ 20.00/ 25.00/ 30.00 N |
| Spring Force at Working Travel (with Switching Element) | +0.75 N |
| **ELECTRICAL DATA** | |
| **Barrel-Probe Tip** | |
| Max. Current Rating | 20.0 A |
| Typical Continuity Resistance | ≤ 3 mOhm |
| **Connector Probe Tip** | |
| Max. Current Rating | 1.0 A |
| Typical Continuity Resistance | ≤ 30 mOhm |
| Typical Insulating Voltage | 1000 V |
| **MATERIALS** | |
| Barrel | Brass, gold-plated |
| Spring | Spring Steel, gold-plated |
| Plunger | Steel |
| Receptacle | Brass, gold-plated |
| **RECOMMENDED DIAMETER OF DRILL** | |
| HP 2361.1 (Trolitax) | 3.50 mm |
| *(Tolerances dependent on carrier material, test drilling is recommended)* | |

| AVAILABLE SCREW TOOLS | |
|---|---|
| **Article Designation** | **max. Tip-∅** |
| WFSB 1060/G-4.0-3.0 | 3.0 |
| WFSB 1060/G-5.0-4.0-Z | 4.0 |
| WFSB 1060/G-6.0-5.0-Z | 5.0 |

| TABLE CONNECTOR PIN | |
|---|---|
| **Connector Pin ∅ X (mm)** | **Connector Pin Length Y (mm)** |
| 0.5 | 6.0 |
| 0.7 | 7.0 |
| 1.0 | 2.5 |
| 1.0 | 4.0 |

## TIP STYLE · DIAMETER · PLATING



| A | C | D | F | F |
|---|---|---|---|---|
| 2.50 Au<br>3.00 Au<br>4.00 Au | 2.40 Au<br>3.00 Au<br>4.00 Au<br>4.80 Au | 1.75 Au<br>1.80 Au<br>2.00 Au<br>2.30 Au<br>3.00 Au<br>3.70 Au | 1.80 Au<br>2.00 Au<br>3.00 Au<br>4.00 Au | 1.40 Au |

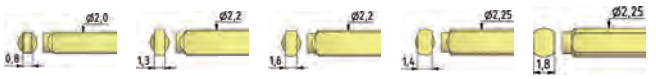

| Y | Y | Y | Y | Y |
|---|---|---|---|---|
| 2.00 x 0.80 Au | 2.20 x 1.30 Au | 2.20 x 1.60 Au | 2.25 x 1.40 Au | 2.25 x 1.80 Au |

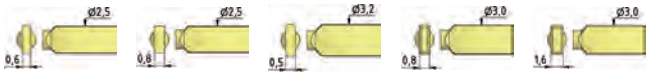

| Y | Y | Y | Y1 | Y1 |
|---|---|---|---|---|
| 2.50 x 0.60 Au | 2.50 x 0.80 Au | 3.20 x 0.50 Au | 3.00 x 0.80 Au | 3.00 x 1.60 Au |

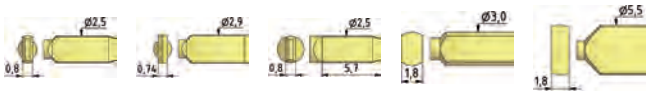

| Y2 | Y4 | Y21 | Y95 | Y95 |
|---|---|---|---|---|
| 2.50 x 0.80 Au | 2.90 x 0.74 Au | 2.50 x 0.80 Au | 3.00 x 1.80 Au | 5.50 x 1.80 Au |

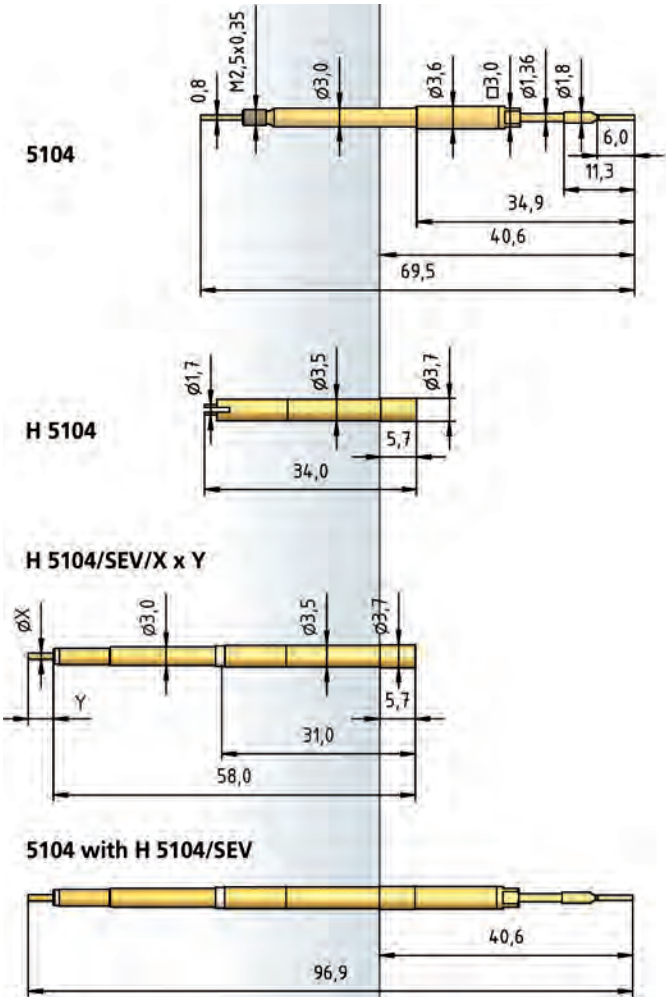


## HOW TO ORDER

| 5104 | - | Y | - | 15.75 N | - | Au | - | 2.2x | 1.6 | /1.0x4.0 |
|---|---|---|---|---|---|---|---|---|---|---|
| 1 | | 2 | | 3 | | 4 | | 5 | 6 | 7 |

1 Series 2 Tip Style 3 Spring Force 4 Tip Plating 5 Tip Diameter
6 Tip Thickness 7 Complete with Switching Element

L'IMPULSION
Retrouvez nous sur
www.limpulsion.fr

# HIGH-CURRENT TEST PROBES

**High-Current Test Probes are used when higher currents are involved.**

Thanks to their compact design, these series are available for centers of 100 mil (2.54 mm) to 300 mil (7.60 mm) with a large number of different tip styles. Alternatively, all series are available in a threaded type which ensures an excellent fit in the receptacle.

Based on PTR HARTMANN's standard sizes, the high-current types are fitted with a split plunger. During contacting, both parts of the plunger are pressed against each other and, as a result, against the barrel wall. The resulting increased contact with the barrel wall and the overall greater contact surface mean that the test probe can be subjected to higher currents, depending on the series, of 16 A up to 100 A. High-Current Test Probes can be used even when very low and constant resistance values are required.

L'IMPULSION | Retrouvez nous sur www.limpulsion.fr

| SERIES | CENTER | PAGE |
|---|---|---|
| 1021 · 1021/G | 100 mil / 2.54 mm | 164 |
| 5310/G | 100 mil / 2.54 mm | 165 |
| 5110/S · 5110/G | 160 mil / 4.00 mm | 166 |
| 1060 · 1060/G | 160 mil / 4.00 mm | 167 |
| 1075 · 1075/G | 197 mil / 5.00 mm | 168 |
| 1078/G | 250 mil / 6.35 mm | 169 |
| 1080/G | 300 mil / 7.60 mm | 170 |





L'IMPULSION
Retrouvez nous sur
www.limpulsion.fr

# Series 1021 • 1021/G

High-Current Test Probe 100 mil / 2.54 mm

| BENEFIT | |
|---|---|
| For use in burn-in and run-in test | |
| Transmission of high currents | |
| Low contact resistance | |
| **MECHANICAL DATA** | |
| Center | 2.54 mm / 100 mil |
| Temperature Range | -30 °C - +120 °C |
| Full Travel | 5.30 mm |
| Working Travel | 4.00 mm |
| Pre-Loaded Spring Force | 0.70 N |
| Spring Force at Working Travel | 3.00 N |
| **ELECTRICAL DATA** | |
| Max. Current Rating | 16.0 A |
| Typical Continuity Resistance | ≤ 10 mOhm |
| **MATERIALS** | |
| Barrel | Brass, gold-plated |
| Spring | Spring Steel, Stainless Steel, gold-plated |
| Plunger | CuBe, gold-plated/Silver Cap |
| Receptacle | Brass, gold-plated |
| **RECOMMENDED DIAMETER OF DRILL** | |
| **H 1021 L** | |
| HP 2361.1 (Trolitax) | 1.98...2.00 mm |
| HGW 2372 | 1.98...2.01 mm |
| **H 1021/(5)GR(V)-C(L)** | |
| HP 2361.1 (Trolitax) | 2.00 mm |
| HGW 2372 | 2.03 mm |
| **HIGH-TEMPERATURE APPLICATIONS** | |
| Temperature Range | -30 °C - +250 °C |
| Pre-Loaded Spring Force | 0.70 N |
| Spring Force at Working Travel (Order Index E) | 3.00 N |

**AVAILABLE SCREW TOOLS**

| Article Designation | max. Tip-∅ |
|---|---|
| WFSB 1021/G-2.54-1.8 | 1.8 |
| WFSB 1021/G-2.54-2.0 | 2.0 |
| WFSB 1021/G-C2S-3.0-2.5-Z | 2.5 |
| WFSB 1021/G-3.5-3.0-Z | 3.0 |

**TIP STYLE · DIAMETER · PLATING**



| AX | A6X | BX | CX | DX |
|---|---|---|---|---|
| 2.00C Au | 2.00C Au | 1.00C Au | 1.30C Au<br>1.80C Au<br>2.00C Au<br>2.50C Au<br>3.00C Au<br>3.50C Au | 0.80C Au<br>1.00C Au |



| D3X | EX | FX | HX | KX |
|---|---|---|---|---|
| 2.00C Ag | 1.80C Au | 1.00C Au | 1.10C Au<br>1.40C Au<br>1.70C Au | 1.25C Au<br>1.75C Au |

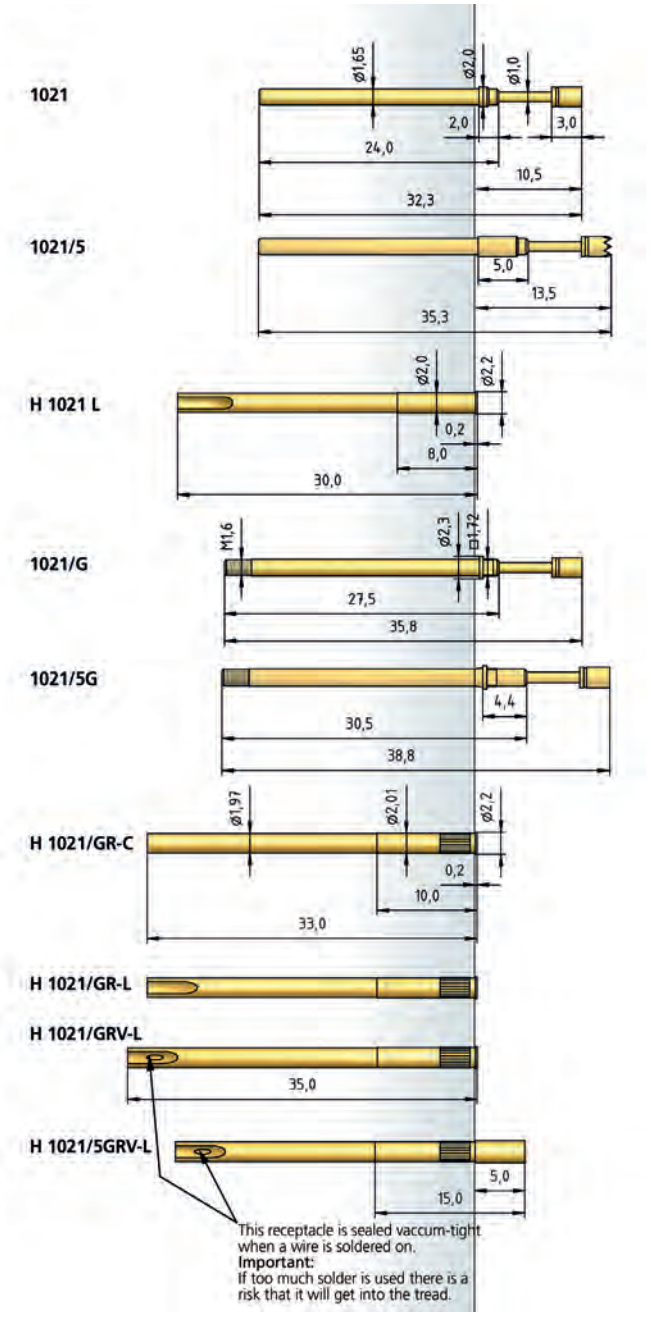


## HOW TO ORDER

| 1021/ | 5 | G | - | CX | - | 3.0 N | E | - | Au | - | 2.0 | C |
|---|---|---|---|---|---|---|---|---|---|---|---|---|
| 1 | 2 | 3 | | 4 | | 5 | 6 | | 7 | | 8 | 9 |

1 Series 4 Collar Height 3 Threaded Design 4 Tip Style 5 Spring Force
6 High Temperature 7 Tip Plating 8 Tip Diameter
9 Tip Material (only for CuBe)

L'IMPULSION
Retrouvez nous sur
www.limpulsion.fr

# High-Current Test Probe 100 mil / 2.54 mm

# Series 5310/G

## TIP STYLE · DIAMETER · PLATING



| CX | F3X |
|---|---|
| 2.00C Au | 2.00C Ag |

| BENEFIT | |
|---|---|
| Compact design | |
| For use in function test or IN-LINE-TEST | |
| **MECHANICAL DATA** | |
| Center | 2.54 mm / 100 mil |
| Temperature Range | -30 °C - +120 °C |
| Full Travel | 4.50 mm |
| Working Travel | 3.50 mm |
| Pre-Loaded Spring Force | 0.35/ 0.40 N |
| Spring Force at Working Travel | 1.50/ 2.50 N |
| Spring Force at Working Travel | see High-Temperature Applications |
| **ELECTRICAL DATA** | |
| Max. Current Rating | 16.0 A |
| Typical Continuity Resistance | ≤ 10 mOhm |
| **MATERIALS** | |
| Barrel | Brass, gold-plated |
| Spring | Stainless Steel, gold-plated |
| Plunger | CuBe, gold-plated/Silver Cap |
| Receptacle | Brass, gold-plated |
| **RECOMMENDED DIAMETER OF DRILL** | |
| HP 2361.1 (Trolitax) | 2.00 mm |
| HGW 2372 | 2.03 mm |
| **HIGH-TEMPERATURE APPLICATIONS** | |
| Temperature Range | -30 °C - +250 °C |
| Pre-Loaded Spring Force | 0.35/ 0.40 N |
| Spring Force at Working Travel (Order Index E) | 1.50/ 2.50 N |
| **AVAILABLE SCREW TOOLS** | |
| **Article Designation** | **max. Tip-∅** |
| WFSB 1021/G-2.54-1.8 | 1.8 |
| WFSB 1021/G-2.54-2.0 | 2.0 |

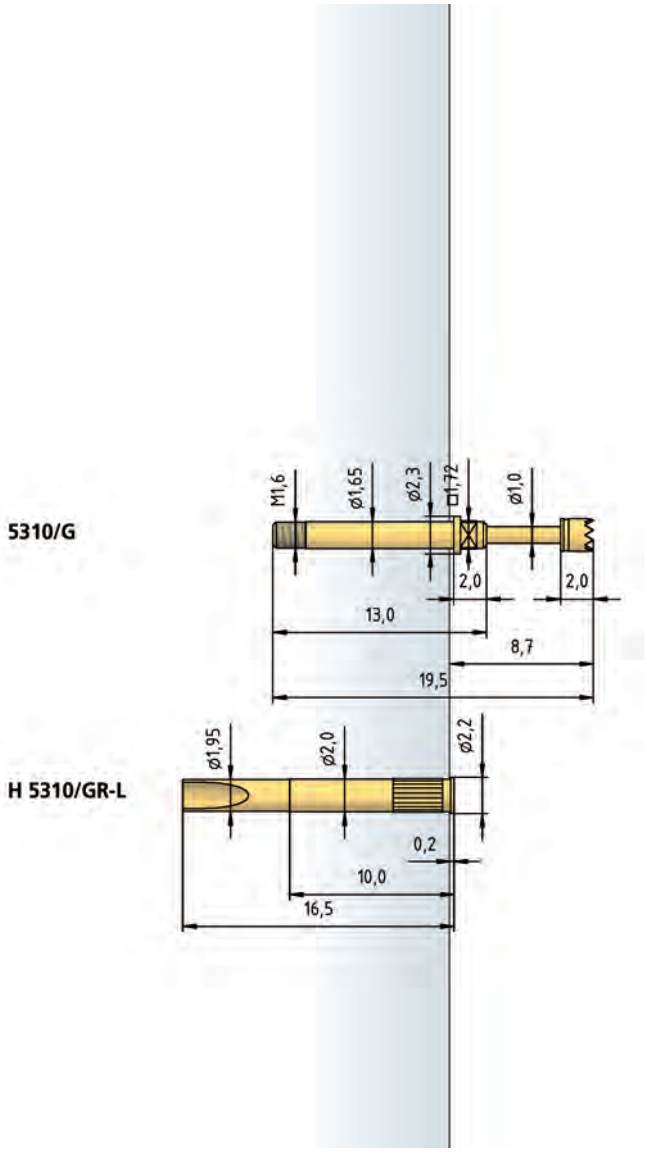


## HOW TO ORDER

| 5310 | G | - | CX | - | 1.5 N | E | - | Au | - | 2.0 | C |
|---|---|---|---|---|---|---|---|---|---|---|---|
| 1 | 2 | | 3 | | 4 | 5 | | 6 | | 7 | 8 |

1 Series 2 Threaded Design 3 Tip Style 4 Spring Force 5 High Temperature 6 Tip Plating 7 Tip Diameter 8 Tip Material (only for CuBe)

13

L'IMPULSION Retrouvez nous sur www.limpulsion.fr

# Series 5110/S • 5110/G

High-Current Test Probe 160 mil / 4.0 mm

| BENEFIT | |
|---|---|
| Compact design | |
| Very robust | |
| Low contact resistance | |
| Test of high currents | |
| **MECHANICAL DATA** | |
| Center | 4.00 mm / 160 mil |
| Temperature Range | -30 °C - +250 °C |
| Full Travel | 3.50 mm |
| Working Travel | 2.80 mm |
| Spring Force at Working Travel | see High-Temperature Applications |
| **ELECTRICAL DATA** | |
| Max. Current Rating | 24.0 A |
| Typical Continuity Resistance | ≤ 20 mOhm |
| **MATERIALS** | |
| Barrel | Brass, gold-plated |
| Spring | Stainless Steel, gold-plated |
| Plunger | CuBe, gold-plated |
| Receptacle | Brass, gold-plated |
| **RECOMMENDED DIAMETER OF DRILL** | |
| HP 2361.1 (Trolitax) | 2.64 mm |
| HGW 2372 | 2.65 mm |
| **HIGH-TEMPERATURE APPLICATIONS** | |
| Temperature Range | -30 °C - +250 °C |
| Pre-Loaded Spring Force | 0.45/ 0.50/ 1.00 N |
| Spring Force at Working Travel (Order Index E) | 1.50/ 2.50/ 3.50 N |
| **AVAILABLE SCREW TOOLS** | |
| **Article Designation** | **max. Tip-∅** |
| WFSB 1060/G-4.0-3.0 | 3.0 |

**TIP STYLE · DIAMETER · PLATING**



| CX | DX |
|---|---|
| 2.30C Au | 2.30C Au |

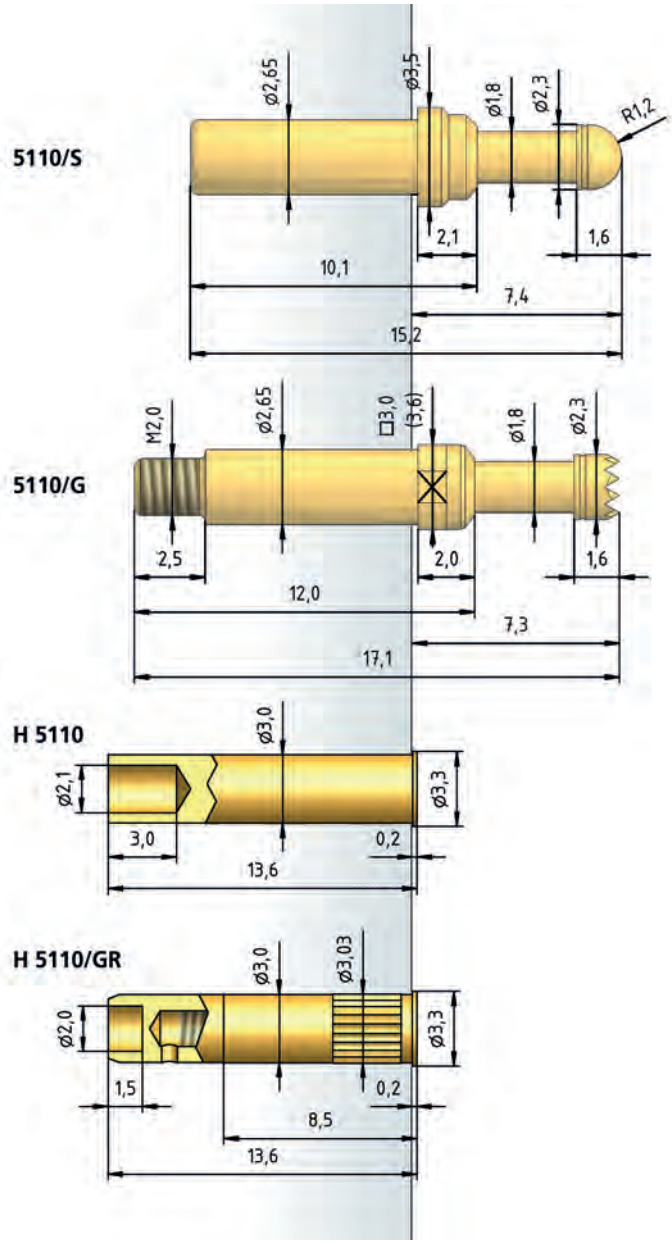


## HOW TO ORDER

| 5110/ | G | - | CX | - | 1.5 N | E | - | Au | - | 2.3 | C |
|---|---|---|---|---|---|---|---|---|---|---|---|
| 1 | 2 | | 3 | | 4 | 5 | | 6 | | 7 | 8 |

1 Series 2 Threaded Design 3 Tip Style 4 Spring Force 5 High Temperature 6 Tip Plating 7 Tip Diameter 8 Tip Material (only for CuBe)

L'IMPULSION
Retrouvez nous sur
www.limpulsion.fr

# High-Current Test Probe 160 mil / 4.0 mm

# Series 1060 • 1060/G

## TIP STYLE · DIAMETER · PLATING



| AX | A6X | BAX | CX | DX |
|---|---|---|---|---|
| 3.00C Au | 3.00C Au | 1.80C Au | 2.30C Au<br>3.00C Au<br>4.00C Au | 2.30C Au<br>3.00C Au |



| DX | DX1 | D3X | FX | GX |
|---|---|---|---|---|
| 1.00C Au<br>1.40C Au | 3.00C Au | 3.00C Ag | 2.30C Au<br>4.00C Au<br>6.00C Au | 2.50C Au |



| HX | H1X | KX |
|---|---|---|
| 1.80C Au | 1.30C Au | 3.00C Au |

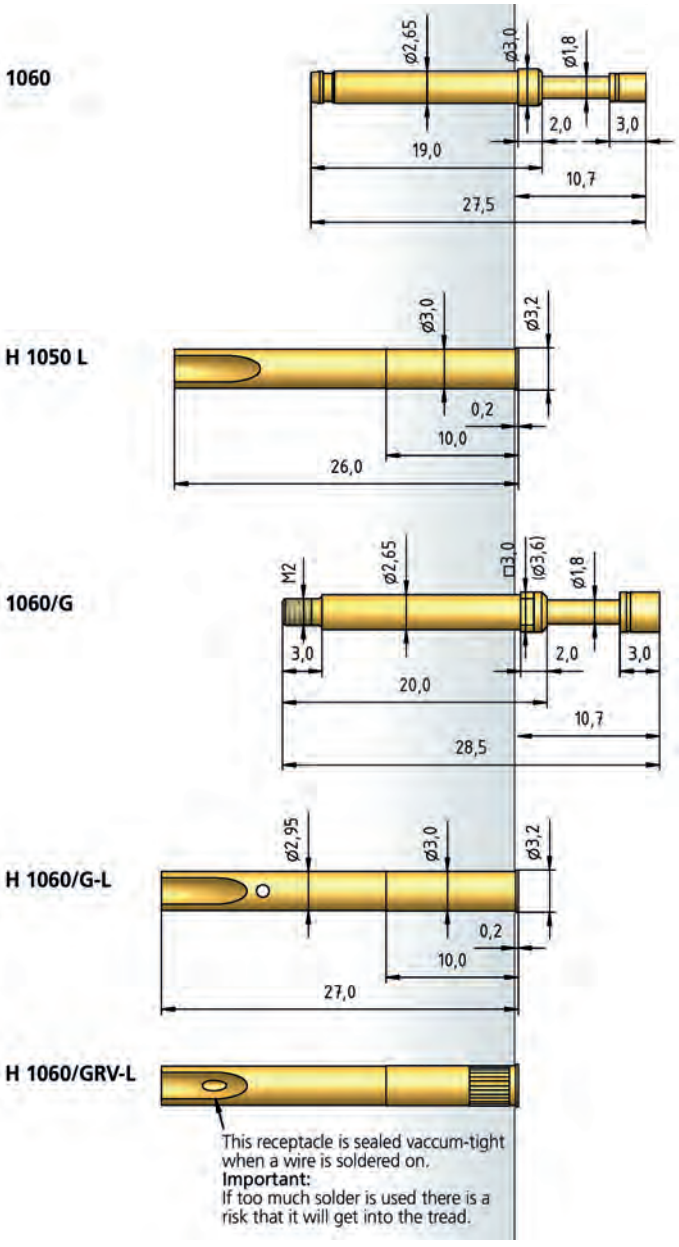


## BENEFIT

| | |
|---|---|
| For use in burn-in and run-in test | |
| Transmission of high currents | |
| Low contact resistance | |

## MECHANICAL DATA

| | |
|---|---|
| Center | 4.00 mm / 160 mil |
| Temperature Range | -30 °C - +120 °C |
| Full Travel | 5.50 mm |
| Working Travel | 4.40 mm |
| Pre-Loaded Spring Force | 0.80 N |
| Spring Force at Working Travel | 3.00 N |

## ELECTRICAL DATA

| | |
|---|---|
| Max. Current Rating | 24.0 A |
| Typical Continuity Resistance | ≤ 10 mOhm |

## MATERIALS

| | |
|---|---|
| Barrel | Brass, gold-plated |
| Spring | Spring Steel, Stainless Steel, gold-plated |
| Plunger | CuBe, gold-plated/Silver Cap |
| Receptacle | Brass, gold-plated |

## RECOMMENDED DIAMETER OF DRILL

| | |
|---|---|
| **H 1050 L, H 1060/G-L** | |
| HP 2361.1 (Trolitax) | 2.99...3.00 mm |
| HGW 2372 | 3.00 mm |
| **H 1060/GRV-L** | |
| HP 2361.1 (Trolitax) | 3.00 mm |
| HGW 2372 | 3.01 mm |

## HIGH-TEMPERATURE APPLICATIONS

| | |
|---|---|
| Temperature Range | -30 °C - +250 °C |
| Pre-Loaded Spring Force | 0.80 N |
| Spring Force at Working Travel (Order Index E) | 3.00 N |

## AVAILABLE SCREW TOOLS

| Article Designation | max. Tip-∅ |
|---|---|
| WFSB 1060/G-4.0-3.0 | 3.0 |
| WFSB 1060/G-5.0-4.0-Z | 4.0 |
| WFSB 1060/G-6.0-5.0-Z | 5.0 |
| WFSB 1060/G4-5.0-4.0 | 4.0 |
| WFSB 1060/G5-6.0-5.0 | 5.0 |

## HOW TO ORDER

| 1060/ | G | - | FX | - | 3.0 N | E | - | Au | - | 4.0 | C |
|---|---|---|---|---|---|---|---|---|---|---|---|
| 1 | 2 | | 3 | | 4 | 5 | | 6 | | 7 | 8 |

1 Series 2 Threaded Design 3 Tip Style 4 Spring Force 5 High Temperature
6 Tip Plating 7 Tip Diameter 8 Tip Material (only for CuBe)



L'IMPULSION Retrouvez nous sur www.limpulsion.fr

# Series 1075 • 1075/G

High-Current Test Probe 197 mil / 5.0 mm

| BENEFIT | |
|---|---|
| For use in burn-in and run-in test | |
| Transmission of high currents | |
| Low contact resistance | |
| **MECHANICAL DATA** | |
| Center | 5.00 mm / 197 mil |
| Temperature Range | -30 °C - +250 °C |
| Full Travel | 5.50 (CLX 10.00 / CL1X 8.5) mm |
| Working Travel | 4.40 (CLX 8.00 / CL1X 7.4) mm |
| Spring Force at Working Travel | see High-Temperature Applications |
| **ELECTRICAL DATA** | |
| Max. Current Rating | 50.0 A |
| Typical Continuity Resistance | ≤ 5 mOhm |
| **MATERIALS** | |
| Barrel | Brass, gold-plated |
| Spring | Stainless Steel, silver-plated |
| Plunger | CuBe, gold-plated/Silver Cap |
| Receptacle | Brass, gold-plated |
| **RECOMMENDED DIAMETER OF DRILL** | |
| HP 2361.1 (Trolitax) | 3.98...3.99 mm |
| HGW 2372 | 3.99...4.00 mm |
| **HIGH-TEMPERATURE APPLICATIONS** | |
| Temperature Range | -30 °C - +250 °C |
| Pre-Loaded Spring Force | 1.50/ 1.50/ 2.50 N |
| Spring Force at Working Travel (Order Index E) | 3.00/ 5.00/ 10.00 N |
| *(Probe Tip CL1X - 10.00 N not available)* | |

| AVAILABLE SCREW TOOLS | |
|---|---|
| **Article Designation** | **max. Tip-∅** |
| WFSB 1070/G-5.0-4.0 | 4.0 |

**TIP STYLE · DIAMETER · PLATING**



| AX | A6X | CLX | CL1X | CX |
|---|---|---|---|---|
| 4.00C Au | 3.00C Au | 4.00C Au | 3.00C Au<br>4.00C Au<br>5.00C Au | 3.00C Au<br>4.00C Au |



| DNX | FX | KX |
|---|---|---|
| 4.00C Ag | 4.00C Au | 3.00C Au |

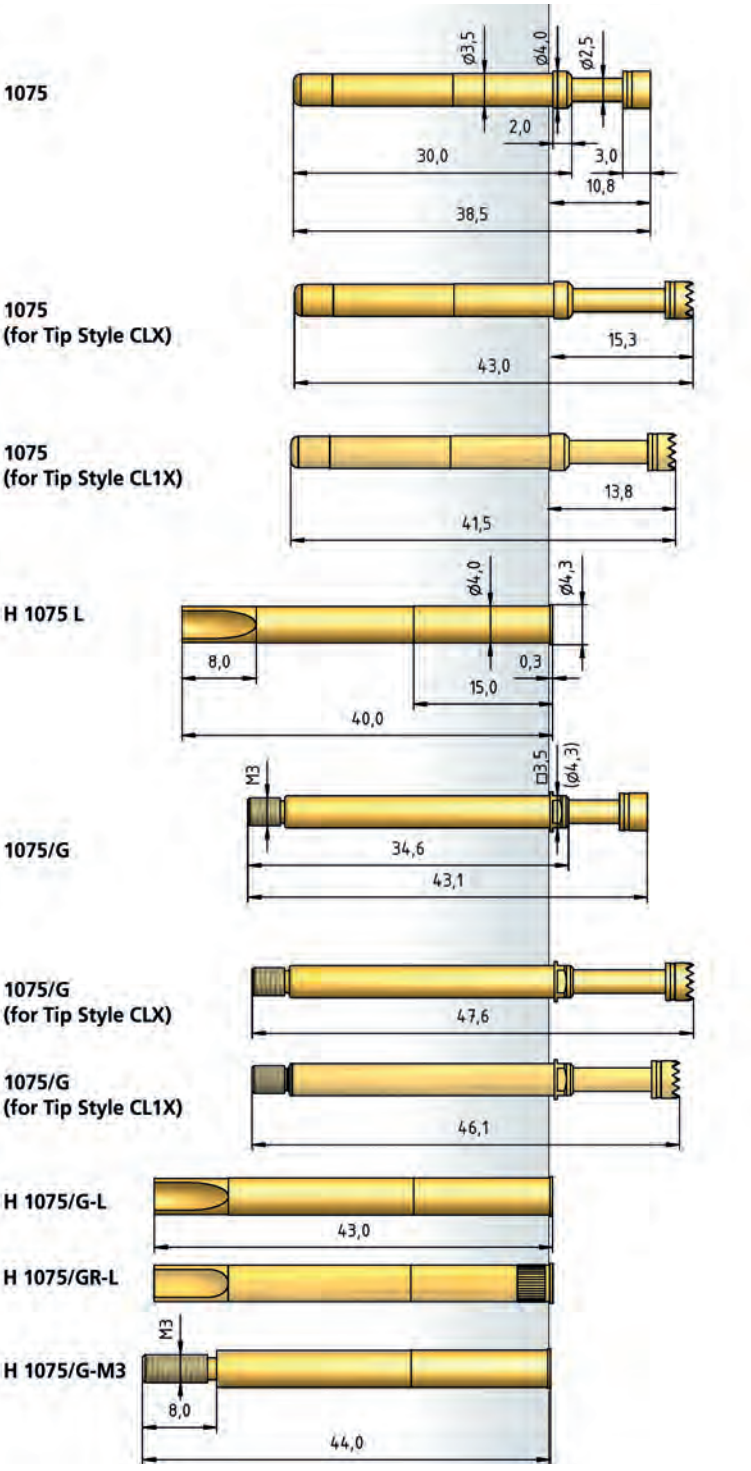


## HOW TO ORDER

| 1075/ | G | - | FX | - | 3.0 N | E | - | Au | - | 4.0 | C |
|---|---|---|---|---|---|---|---|---|---|---|---|
| 1 | 2 | | 3 | | 4 | 5 | | 6 | | 7 | 8 |

1 Series 2 Threaded Design 3 Tip Style 4 Spring Force 5 High Temperature 6 Tip Plating 7 Tip Diameter 8 Tip Material (only for CuBe)

L'IMPULSION Retrouvez nous sur www.limpulsion.fr

# High-Current Test Probe 250 mil / 6.35 mm

## Series 1078/G NEW

### TIP STYLE · DIAMETER · PLATING

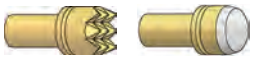

| CX | DNX |
|---|---|
| 5.00C Au | 4.00C Ag |

| BENEFIT | |
|---|---|
| Compact design | |
| Use in extreme production environments | |
| For use in function test or IN-LINE-TEST | |
| Test of high currents | |
| **MECHANICAL DATA** | |
| Center | 6.35 mm / 250 mil |
| Temperature Range | -30 °C - +250 °C |
| Full Travel | 5.50 mm |
| Working Travel | 4.40 mm |
| Spring Force at Working Travel | see High-Temperature Applications |
| **ELECTRICAL DATA** | |
| Max. Current Rating | 75.0 A |
| Typical Continuity Resistance | ≤ 5 mOhm |
| **MATERIALS** | |
| Barrel | Brass, silver-plated |
| Spring | Stainless Steel, gold-plated |
| Plunger | CuBe, gold-plated/Silver Cap |
| Receptacle | Brass, silver-plated |
| **RECOMMENDED DIAMETER OF DRILL** | |
| | 5.47...5.50 mm |
| **HIGH-TEMPERATURE APPLICATIONS** | |
| Temperature Range | -30 °C - +250 °C |
| Pre-Loaded Spring Force | 2.20/ 4.50 N |
| Spring Force at Working Travel (Order Index E) | 5.00/ 10.00 N |
| **AVAILABLE SCREW TOOLS** | |
| **Article Designation** | **max. Tip-∅** |
| WFSB 3015/G-7.0 | 5.0 |

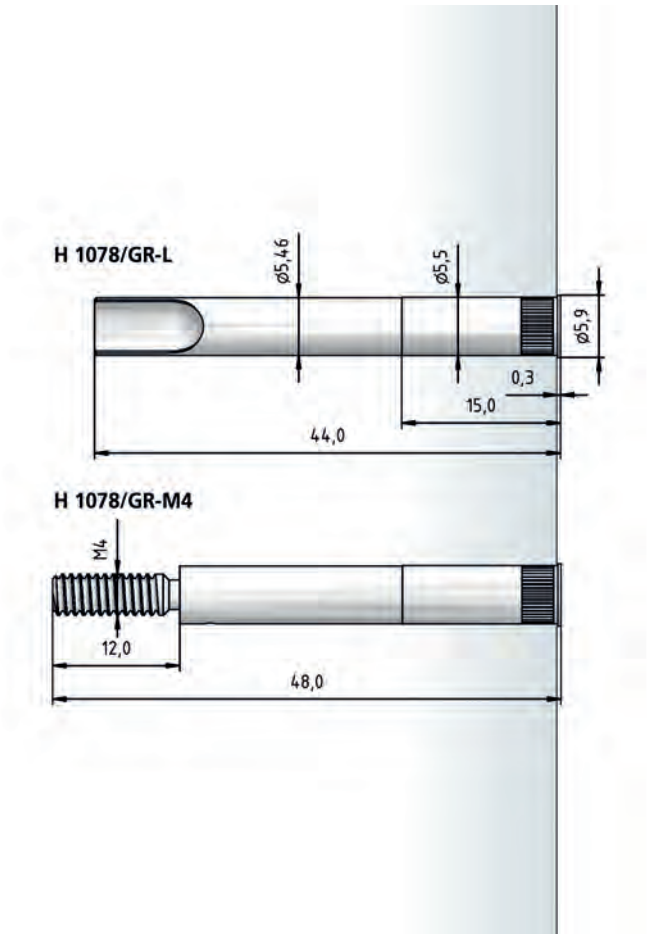


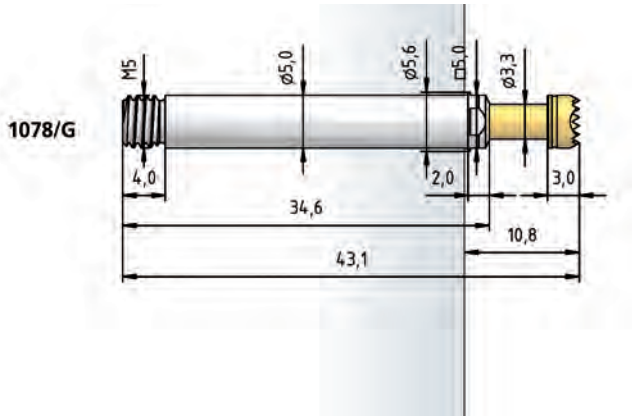


13

### HOW TO ORDER

| 1078/ | G | - | CX | - | 5.0 N | E | - | Au | - | 5.0 | C |
|---|---|---|---|---|---|---|---|---|---|---|---|
| 1 | 2 | | 3 | | 4 | 5 | | 6 | | 7 | 8 |

1 Series 2 Threaded Design 3 Tip Style 4 Spring Force 5 High Temperature 6 Tip Plating 7 Tip Diameter 8 Tip Material (only for CuBe)

L'IMPULSION Retrouvez nous sur www.limpulsion.fr

# Series 1080/G

High-Current Test Probe 300 mil / 7.6 mm

| BENEFIT | |
|---|---|
| Compact design | |
| Use in extreme production environments | |
| For use in function test or IN-LINE-TEST | |
| Test of high currents | |
| **MECHANICAL DATA** | |
| Center | 7.60 mm / 300 mil |
| Temperature Range | -30 °C - +250 °C |
| Full Travel | 5.50 mm |
| Working Travel | 4.40 mm |
| Spring Force at Working Travel | see High-Temperature Applications |
| **ELECTRICAL DATA** | |
| Max. Current Rating | 100.0 A |
| Typical Continuity Resistance | ≤ 5 mOhm |
| **MATERIALS** | |
| Barrel | Brass, silver-plated |
| Spring | Stainless Steel, gold-plated |
| Plunger | CuBe, gold-plated/Silver Cap |
| Receptacle | Brass, silver-plated |
| **RECOMMENDED DIAMETER OF DRILL** | |
| HP 2361.1 (Trolitax) | 6.40...6.50 mm |
| HGW 2372 | 6.50 mm |
| **HIGH-TEMPERATURE APPLICATIONS** | |
| Temperature Range | -30 °C - +250 °C |
| Pre-Loaded Spring Force | 3.00/ 5.00 N |
| Spring Force at Working Travel (Order Index E) | 7.00/ 15.00 N |
| **AVAILABLE SCREW TOOLS** | |
| **Article Designation** | **max. Tip-∅** |
| Standard Socket - Wrench 6.0 mm | 6.0 |

**TIP STYLE · DIAMETER · PLATING**

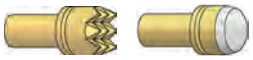

| CX | DNX |
|---|---|
| 6.00C Au | 6.00C Ag |

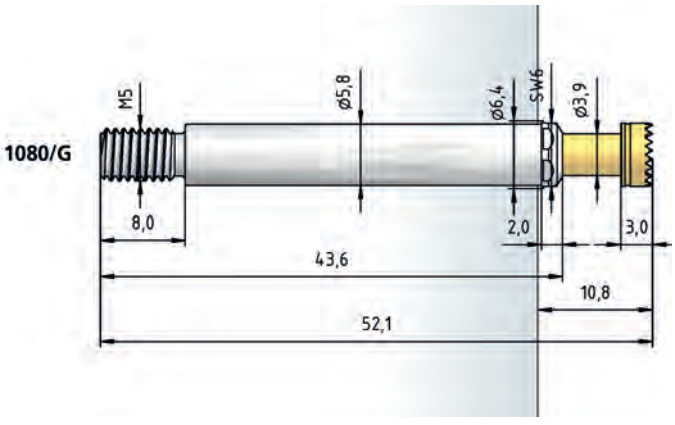


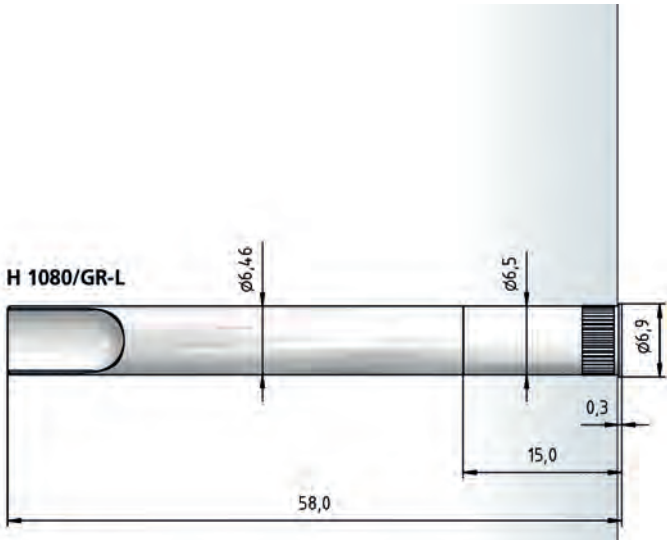


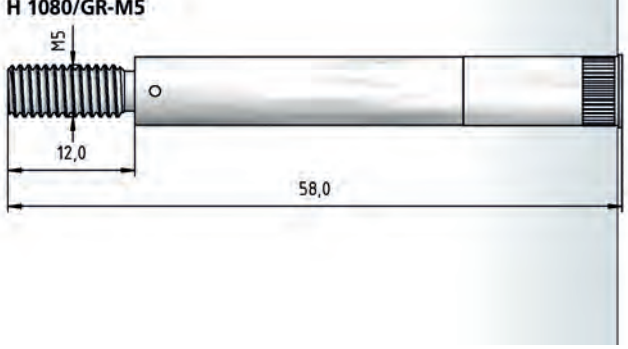


## HOW TO ORDER

| 1080/ | G | - | CX | - | 7.0 N | E | - | Au | - | 6.0 | C |
|---|---|---|---|---|---|---|---|---|---|---|---|
| 1 | 2 | | 3 | | 4 | 5 | | 6 | | 7 | 8 |

1 Series 2 Threaded Design 3 Tip Style 4 Spring Force 5 High Temperature 6 Tip Plating 7 Tip Diameter 8 Tip Material (only for CuBe)

L'IMPULSION Retrouvez nous sur www.limpulsion.fr

# PNEUMATIC TEST PROBES

**Pneumatic Test Probes are operated with compressed air. The plunger presses against the test piece at an operating pressure of 6 bar applied to the test probe via a pneumatic hose. Depending on the size, the maximum contact pressure is up to 1.5 N.**

Normally Pneumatic Test Probes are used for function test tasks, and always when measuring points must be triggered individually. A wide range of accessories with distributors, reducers, connection cable glands etc. is available for setting up an extremely large number of contacting processes. As the Pneumatic Test Probes are driven individually/independently, use without complicated test adapters is also possible.

In addition to standard types, there are models with an easy-replacement system and models which function as an opener. With the easy-to-use easy-replacement system, it is only necessary to replace the pneumatic cylinder together with the contacting unit – there is no need to release either the wiring or the pneumatic hose. This system, patented by PTR HARTMANN, considerably reduces set-up and maintenance times.

The opener (4034 series - see page 177) is a technically sophisticated variant, and is also patented. Because of the special design in the barrel, at first it is closed. It is only when a component to be contacted is not present and the switch travel is exceeded that the test probe opens and does not pass on a signal.

L'IMPULSION Retrouvez nous sur www.limpulsion.fr

| SERIES | CENTER | PAGE |
|---|---|---|
| 4006 | 118 mil / 3.00 mm | 174 |
| 4005 | 138 mil / 3.50 mm | 175 |
| 4004 | 160 mil / 4.00 mm | 176 |
| 4034 | 160 mil / 4.00 mm | 177 |
| 4004/G | 160 mil / 4.00 mm | 178 |
| Pneumatic Accessories | | 179 |






L'IMPULSION Retrouvez nous sur www.limpulsion.fr

# Series 4006

Pneumatic Test Probe 118 mil / 3.0 mm

| BENEFIT | |
|---|---|
| Contacting of individual test points | |
| Contacting without adapter possible | |
| For use in function test | |
| **MECHANICAL DATA** | |
| Center | 3.00 mm / 118 mil |
| Temperature Range | -30 °C - +120 °C |
| Full Travel | 10.00 mm |
| Working Travel | 6.00 mm |
| Spring Force at Working Travel | 0.60 N |
| Operating Pressure | 6 bar |
| Operating Medium | Compressed Air (filtered, oil-free) |
| **ELECTRICAL DATA** | |
| Max. Current Rating | 2.0 A |
| Typical Continuity Resistance | ≤ 30 mOhm |
| **MATERIALS** | |
| Barrel | Brass, gold-plated |
| Spring | Spring Steel, gold-plated |
| Plunger | Steel |
| Receptacle | Brass, gold-plated |
| **RECOMMENDED DIAMETER OF DRILL** | |
| HP 2361.1 (Trolitax) | 2.40 mm |
| HGW 2372 (Glass filled material) | 2.41 mm |

**TIP STYLE · DIAMETER · PLATING**




| BST1 | C | G | V |
|---|---|---|---|
| 1.50 Rh | 2.50 Rh | 1.30 Rh | 1.00 Rh |

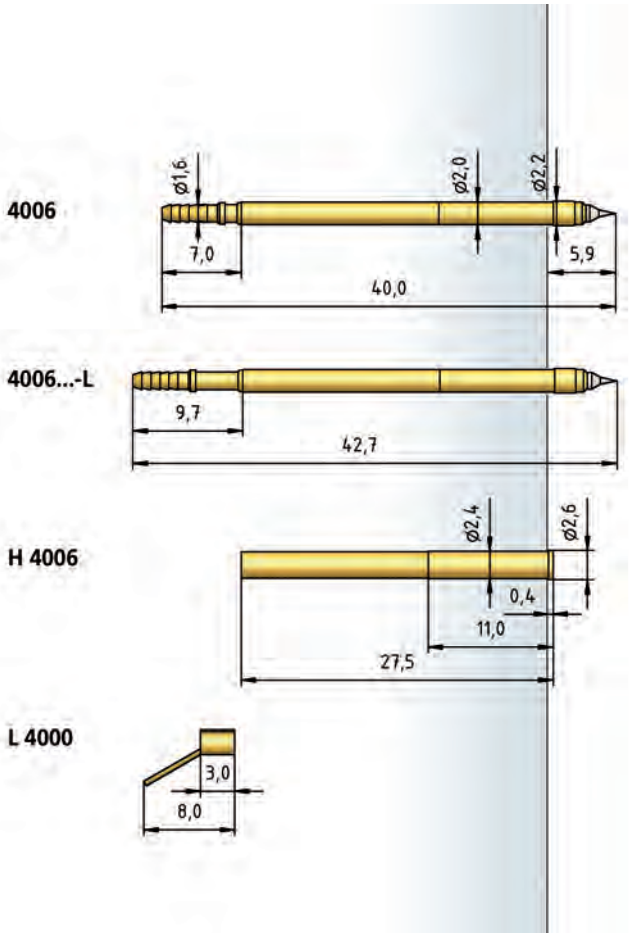


**Accessories see page 179**

## HOW TO ORDER

| 4006 | - | BST1 | - | 0.6 N | - | Rh | - | 1.5 | - | L |
|---|---|---|---|---|---|---|---|---|---|---|
| 1 | | 2 | | 3 | | 4 | | 5 | | 6 |

1 Series 2 Tip Style 3 Spring Force 4 Tip Plating 5 Tip Diameter
6 For Connection of L 4000

L'IMPULSION
Retrouvez nous sur
www.limpulsion.fr

# Pneumatic Test Probe 138 mil / 3.5 mm

# Series 4005

## TIP STYLE · DIAMETER · PLATING






| BST1 | C | G | H |
|---|---|---|---|
| 1.50 Rh | 2.50 Rh | 1.30 Rh | 2.00 Rh |

| BENEFIT | |
|---|---|
| Contacting of individual test points | |
| Contacting without adapter possible | |
| For use in function test | |
| **MECHANICAL DATA** | |
| Center | 3.50 mm / 138 mil |
| Temperature Range | -30 °C - +120 °C |
| Full Travel | 10.00 mm |
| Working Travel | 6.00 mm |
| Spring Force at Working Travel | 0.80 N |
| Operating Pressure | 6 bar |
| Operating Medium | Compressed Air (filtered, oil-free) |
| **ELECTRICAL DATA** | |
| Max. Current Rating | 2.0 A |
| Typical Continuity Resistance | ≤ 30 mOhm |
| **MATERIALS** | |
| Barrel | Brass, gold-plated |
| Spring | Spring Steel, gold-plated |
| Plunger | Steel |
| Receptacle | Brass, gold-plated |
| **RECOMMENDED DIAMETER OF DRILL** | |
| HP 2361.1 (Trolitax) | 3.00 mm |
| HGW 2372 (Glass filled material) | 3.01 mm |

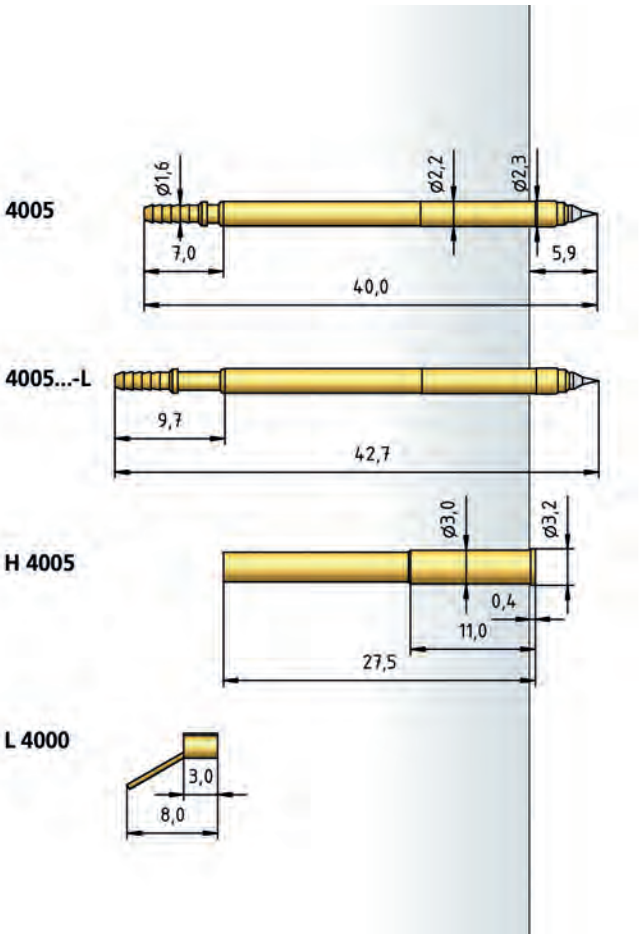


**Accessories see page 179**

## HOW TO ORDER

| 4005 | - | BST1 | - | 0.8 N | - | Rh | - | 2.0 | - | L |
|---|---|---|---|---|---|---|---|---|---|---|
| 1 | | 2 | | 3 | | 4 | | 5 | | 6 |

1 Series 2 Tip Style 3 Spring Force 4 Tip Plating 5 Tip Diameter
6 For Connection of L 4000



L'IMPULSION Retrouvez nous sur www.limpulsion.fr

# Series 4004

Pneumatic Test Probe 160 mil / 4.0 mm

| BENEFIT | |
|---|---|
| Contacting of individual test points | |
| Contacting without adapter possible | |
| For use in function test | |
| **MECHANICAL DATA** | |
| Center | 4.00 mm / 160 mil |
| Temperature Range | -30 °C - +120 °C |
| Full Travel | 10.00 mm |
| Working Travel | 6.00 mm |
| Spring Force at Working Travel | 1.50 N |
| Operating Pressure | 6 bar |
| Operating Medium | Compressed Air (filtered, oil-free) |
| **ELECTRICAL DATA** | |
| Max. Current Rating | 3.0 A |
| Typical Continuity Resistance | ≤ 30 mOhm |
| **MATERIALS** | |
| Barrel | Brass, gold-plated |
| Spring | Spring Steel, gold-plated |
| Plunger | Steel |
| Receptacle | Brass, gold-plated |
| **RECOMMENDED DIAMETER OF DRILL** | |
| HP 2361.1 (Trolitax) | 3.40 mm |
| HGW 2372 (Glass filled material) | 3.41 mm |

**TIP STYLE · DIAMETER · PLATING**



| A | BST1 | G |
|---|---|---|
| 3.00 Rh | 2.00 Rh | 1.30 Rh |

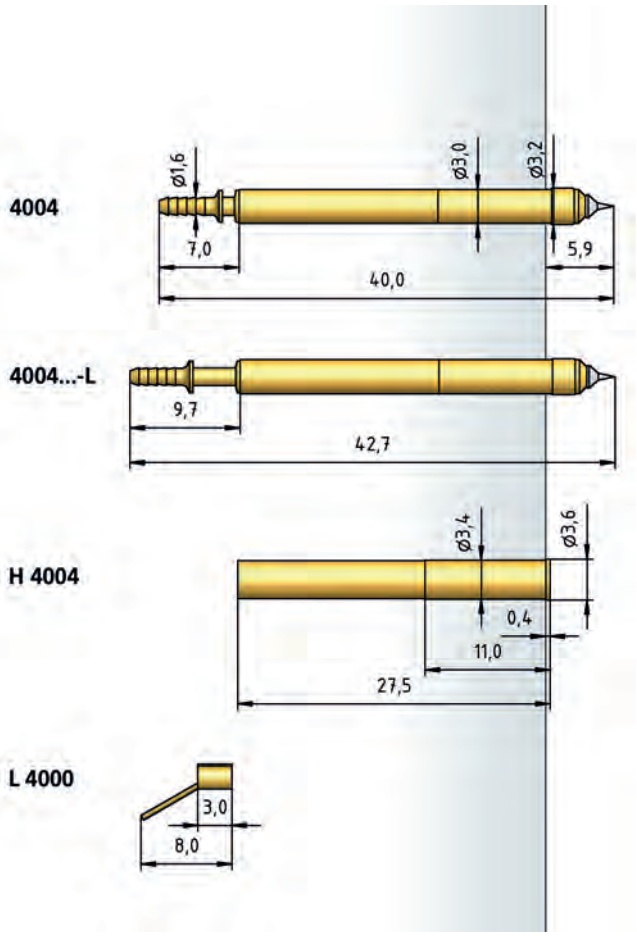


**Accessories see page 179**

## HOW TO ORDER

| 4004 | - | BST1 | - | 1.5 N | - | Rh | - | 2.0 | - | L |
|---|---|---|---|---|---|---|---|---|---|---|
| 1 | | 2 | | 3 | | 4 | | 5 | | 6 |

1 Series 2 Tip Style 3 Spring Force 4 Tip Plating 5 Tip Diameter
6 For Connection of L 4000

L'IMPULSION
Retrouvez nous sur
www.limpulsion.fr

# Pneumatic Test Probe "Opener" Type (NC) 160 mil / 4.0 mm

# Series 4034

## TIP STYLE · DIAMETER · PLATING



| A | BST1 | G |
|---|---|---|
| 3.00 Rh | 2.00 Rh | 1.30 Rh |

| BENEFIT | |
|---|---|
| Switching test probe "Opener" (NC) type | |
| Contacting of individual test points | |
| Contacting without adapter possible | |
| For use in function test | |
| **MECHANICAL DATA** | |
| Center | 4.00 mm / 160 mil |
| Temperature Range | -30 °C - +120 °C |
| Full Travel | 10.00 mm |
| Working Travel | 5.00 mm |
| Switching Travel | 6.00 mm |
| Spring Force at Working Travel | 1.60 N |
| Spring Force at Switching Travel | 1.50 N |
| Operating Pressure | 6 bar |
| Operating Medium | Compressed Air (filtered bar, oil-free) |
| **ELECTRICAL DATA** | |
| **Receptacle-Probe Tip** | |
| Max. Current Rating | 3.0 A |
| Typical Continuity Resistance | ≤ 30 mOhm |
| **TUBE CONNECTION-PROBE TIP** | |
| Max. Current Rating | 1.0 A |
| Typical Continuity Resistance | ≤ 50 mOhm |
| **MATERIALS** | |
| Barrel | Brass, gold-plated |
| Spring | Spring Steel, gold-plated |
| Plunger | Steel |
| Receptacle | Brass, gold-plated |
| **RECOMMENDED DIAMETER OF DRILL** | |
| HP 2361.1 (Trolitax) | 3.40 mm |
| HGW 2372 (Glass filled material) | 3.41 mm |

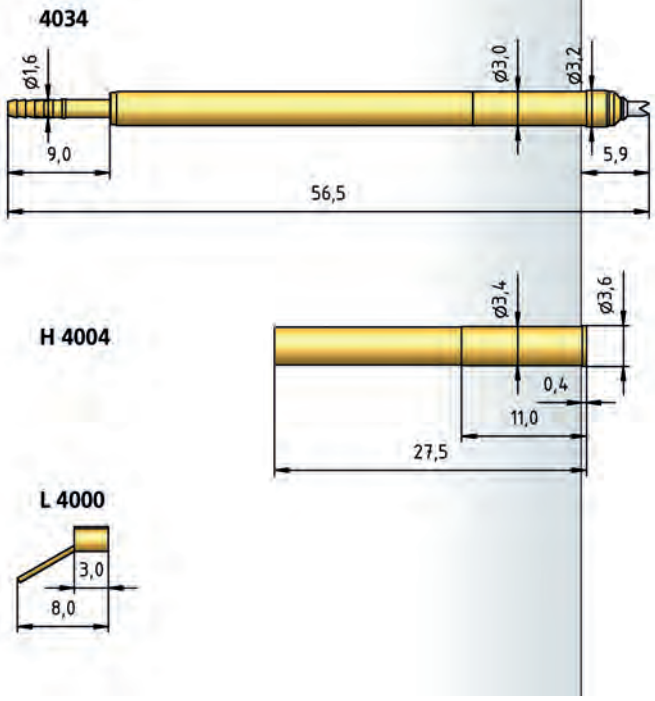


Accessories see page 179

## HOW TO ORDER

| 4034 | - | G | - | 1.6 N | - | Rh | - | 1.3 | - | L |
|---|---|---|---|---|---|---|---|---|---|---|
| 1 | | 2 | | 3 | | 4 | | 5 | | 6 |

1 Series 2 Tip Style 3 Spring Force 4 Tip Plating 5 Tip Diameter
6 For Connection of L 4000



L'IMPULSION Retrouvez nous sur www.limpulsion.fr

# Series 4004/G

Pneumatic Test Probe with Easy-Replacement System 160 mil / 4.0 mm

| BENEFIT | |
|---|---|
| Contacting of individual test points | |
| Contacting without adapter possible | |
| For use in function test | |
| Replacement without soldering | |
| **MECHANICAL DATA** | |
| Center | 4.00 mm / 160 mil |
| Temperature Range | -30 °C - +120 °C |
| Full Travel | 10.00 mm |
| Working Travel | 6.00 mm |
| Spring Force at Working Travel | 0.60 N |
| Operating Pressure | 6 bar |
| Operating Medium | Compressed Air (filtered, oil-free) |
| **ELECTRICAL DATA** | |
| Max. Current Rating | 2.0 A |
| Typical Continuity Resistance | ≤ 30 mOhm |
| **MATERIALS** | |
| Barrel | Brass, gold-plated |
| Spring | Spring Steel, gold-plated |
| Plunger | Steel |
| Receptacle | Brass, gold-plated |
| **RECOMMENDED DIAMETER OF DRILL** | |
| HP 2361.1 (Trolitax) | 3.40 mm |
| HGW 2372 (Glass filled material) | 3.41 mm |
| **AVAILABLE SCREW TOOLS** | |
| **Article Designation** | **max. Tip-∅** |
| WFSB 1060/G-4.0-3.0 | 3.0 |
| WFSB 1060/G-5.0-4.0-Z | 4.0 |
| WFSB 1060/G-6.0-5.0-Z | 5.0 |

**TIP STYLE · DIAMETER · PLATING**




| BST1 | C | G | V |
|---|---|---|---|
| 1.50 Rh | 2.50 Rh | 1.30 Rh | 1.00 Rh |

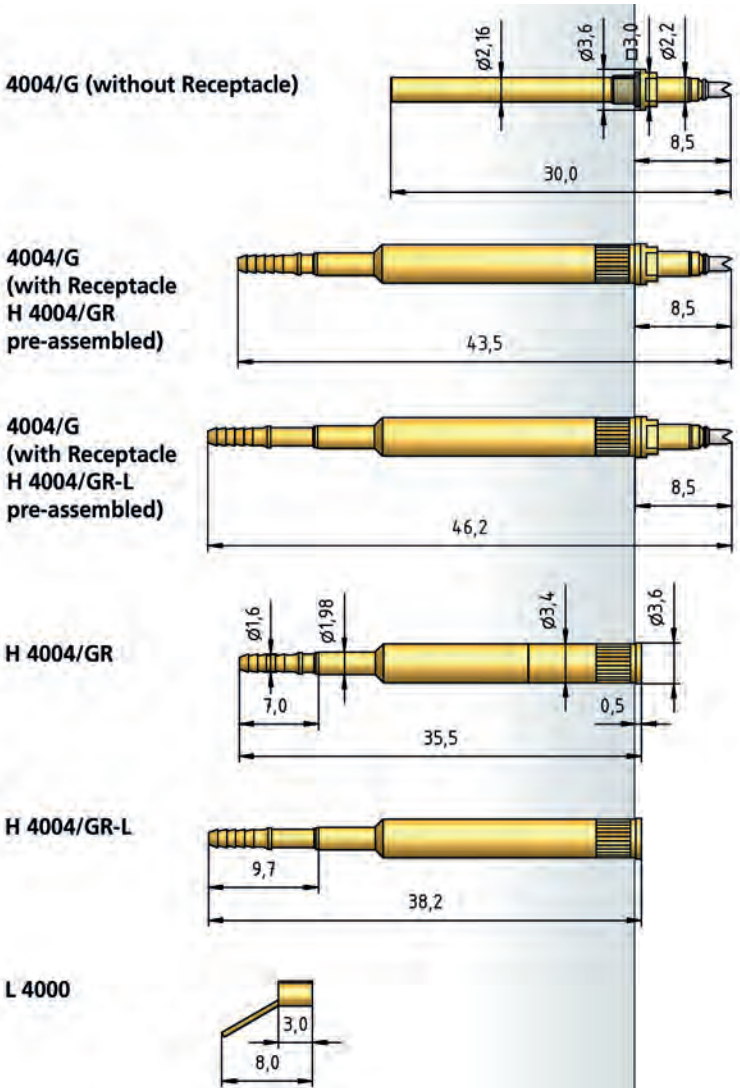


**Accessories see page 179**

## HOW TO ORDER: Test Probe with Receptacle

| 4004/ | G | - | BST1 | - | 0.6 N | - | Rh | - | 1.5 | - | GR | - | L |
|---|---|---|---|---|---|---|---|---|---|---|---|---|---|
| 1 | 2 | | 3 | | 4 | | 5 | | 6 | | 7 | | 8 |

1 Series 2 Threaded Design 3 Tip Style 4 Spring Force 5 Tip Plating 6 Tip Diameter 7 Receptacle 8 For Connection of L 4000

## HOW TO ORDER: Single Test Probe

| 4004/ | G | - | BST1 | - | 0.6 N | - | Rh | - | 1.5 |
|---|---|---|---|---|---|---|---|---|---|
| 1 | 2 | | 3 | | 4 | | 5 | | 6 |

1 Series 2 Threaded Design 3 Tip Style 4 Spring Force 5 Tip Plating 6 Tip Diameter

L'IMPULSION Retrouvez nous sur www.limpulsion.fr

# Accessories Pneumatic Test Probes

Reducer **RS 3/1**

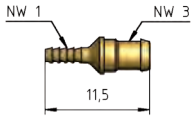




Reducer **RS 3/2**

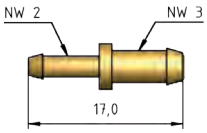


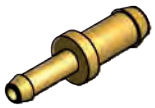

Dummy Plug for Distributor (incl. 1 seal) **BSV 1/8**

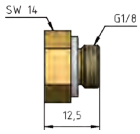




Dummy Plug for Distributor (incl. 1 seal) **BSV M5**

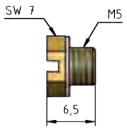




Threated Sleeve (incl. 1 seal) **AV M5/1**

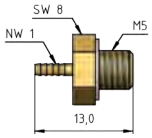




Threated Sleeve (incl. 1 seal) **AV M5/2**

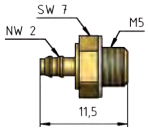




Threated Sleeve (incl. 1 seal) **AV M5/3**

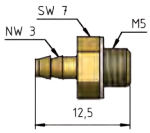




T-Piece **TS 3xM5**

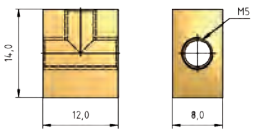




Tenfolder Distributor **V 10xM5**

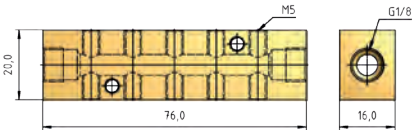




Compressed Air Hose for NW 1 **DS 1 -** $\varnothing_{inside}$ - 1.2 mm / $\varnothing_{outside}$ - 2.0 mm

Compressed Air Hose for NW 3 **DS 3 -** $\varnothing_{inside}$ - 2.0 mm / $\varnothing_{outside}$ - 3.9 mm



L'IMPULSION
Retrouvez nous sur
www.limpulsion.fr

# BATTERY TEST PROBES

**As Battery Test Probes, they are used, for example, wherever it is necessary to charge the rechargeable batteries in mobile devices such as scanners, card readers, communication devices, etc.**

In many cases, they are also used to connect two PCBs. In addition to many standard products, PTR HARTMANN specializes in customer-specific solutions.

As a result of our wealth of experience in the connection technology sector, we know exactly what is important in the mounting of PCBs. In addition to complete interface pin blocks (see page 194), of course our products are also available belted and with "pick & place" pads. We develop professional solutions together with our customers, and then implement them precisely.

## Selected Applications

- Mobile process data acquisition devices
- Medical devices
- Military devices
- PCB technology
- Mobile communication
- Audio-video applications
- Data acquisition devices
- Automotive equipment
- Heating control units

L'IMPULSION
Retrouvez nous sur
www.limpulsion.fr

| SERIES | CENTER | PAGE |
|---|---|---|
| 1064 | 100 mil / 2.54 mm | 182 |
| 5303 | 100 mil / 2.54 mm | 183 |
| 5303/LR01 | 100 mil / 2.54 mm | 184 |
| 5303/T01 | 100 mil / 2.54 mm | 185 |
| 5305 | 100 mil / 2.54 mm | 186 |
| 5099 | 118 mil / 3.00 mm | 187 |
| 5099.04 | 118 mil / 3.00 mm | 188 |
| 5099.43 | 138 mil / 3.50 mm | 189 |
| 5110/S | 160 mil / 4.00 mm | 190 |
| 5082 | 256 mil / 6.50 mm | 191 |
| 5082.01 | 256 mil / 6.50 mm | 192 |
| 5082/L | 256 mil / 6.50 mm | 193 |






L'IMPULSION Retrouvez nous sur www.limpulsion.fr

# Series 1064

Battery Probe 100 mil / 2.54 mm

| BENEFIT | |
|---|---|
| Short, compact size | |
| Board-to-board contacting | |
| For use in charging units | |
| **MECHANICAL DATA** | |
| Center | 2.54 mm / 100 mil |
| Temperature Range | -30 °C - +120 °C |
| Full Travel | 1.27 mm |
| Working Travel | up to 1.27 mm |
| Pre-Loaded Spring Force | 0.35 N |
| Spring Force at Working Travel | 1.25 N |
| **ELECTRICAL DATA** | |
| Max. Current Rating | 5.0 A |
| Typical Continuity Resistance | ≤ 185 mOhm |
| **MATERIALS** | |
| Barrel | Nickel Silver, non plated |
| Spring | Spring Steel, Stainless Steel, silver-plated |
| Plunger | CuBe, gold-plated |
| Receptacle | Nickel Silver, non plated |
| **RECOMMENDED DIAMETER OF DRILL** | |
| HP 2361.1 (Trolitax) | 1.75 mm |
| HGW 2372 (Glass filled material) | 1.75 mm |
| **HIGH-TEMPERATURE APPLICATIONS** | |
| Temperature Range | -40 °C - +250 °C |
| Pre-Loaded Spring Force | 0.20/ 0.75 N |
| Spring Force at Working Travel (Order Index E) | 0.60/ 1.85 N |

**TIP STYLE · DIAMETER · PLATING**

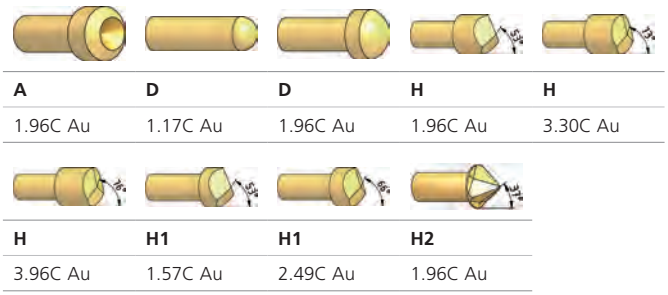

| A | D | D | H | H |
|---|---|---|---|---|
| 1.96C Au | 1.17C Au | 1.96C Au | 1.96C Au | 3.30C Au |

| H | H1 | H1 | H2 |
|---|---|---|---|
| 3.96C Au | 1.57C Au | 2.49C Au | 1.96C Au |

**1064 (for Tip Styles A / D)**

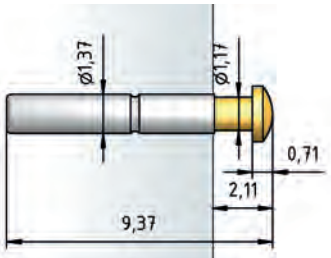


**1064 (for Tip Styles H / H1)**

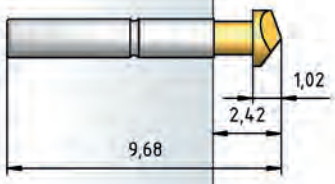


**1064 (for Tip Style H2)**

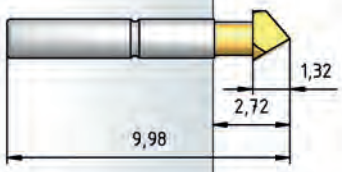


**H 1064 L**

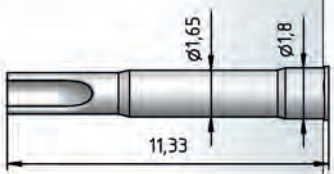


**H 1064 C**

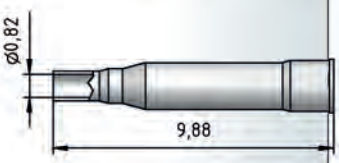


**H 1064 W**

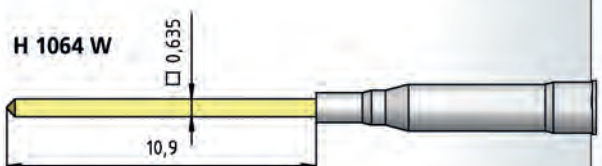


## HOW TO ORDER

| 1064 | - | D | - | 0.6 N | E | - | Au | - | 1.96 | C |
|---|---|---|---|---|---|---|---|---|---|---|
| 1 | | 2 | | 3 | 4 | | 5 | | 6 | 7 |

1 Series 2 Tip Style 3 Spring Force 4 High Temperature 5 Tip Plating 6 Tip Diameter 7 Tip Material (only for CuBe)

L'IMPULSION Retrouvez nous sur www.limpulsion.fr

Battery Probe 100 mil / 2.54 mm

# Series 5303

## TIP STYLE · DIAMETER · PLATING



| D |
|---|
| 1.07M Au |

## BENEFIT

| |
|---|
| Short, compact size |
| Board-to-board contacting |
| SMD - Automated Assembly |
| Tape on Reel |

## MECHANICAL DATA

| | |
|---|---|
| Center | 2.54 mm / 100 mil |
| Temperature Range | -30 °C - +120 °C |
| Full Travel | 1.40 mm |
| Working Travel | 0.70 mm |
| Pre-Loaded Spring Force | 0.25 N |
| Spring Force at Working Travel | 0.85 N |

## ELECTRICAL DATA

| | |
|---|---|
| Max. Current Rating | 3.5 A |
| Typical Continuity Resistance | ≤ 20 mOhm |

## MATERIALS

| | |
|---|---|
| Barrel | Brass, gold-plated |
| Spring | Spring Steel, gold-plated |
| Plunger | Brass, gold-plated |

5303

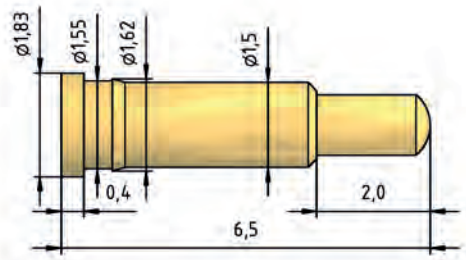


## HOW TO ORDER

| 5303 | - | D | - | 0.85 N | - | Au | - | 1.07 | M |
|---|---|---|---|---|---|---|---|---|---|
| 1 | | 2 | | 3 | | 4 | | 5 | 6 |

1 Series 2 Tip Style 3 Spring Force 4 Tip Plating 5 Tip Diameter 6 Tip Material (only for Brass)



L'IMPULSION Retrouvez nous sur www.limpulsion.fr

NEW

# Series 5303/LR01

Battery Probe 100 mil / 2.54 mm

| BENEFIT | |
|---|---|
| Short, compact size | |
| Connection with wire and strange wire possible | |
| Individual bonding possible | |
| **MECHANICAL DATA** | |
| Center | 2.54 mm / 100 mil |
| Temperature Range | -30 °C - +120 °C |
| Full Travel | 1.40 mm |
| Working Travel | 0.70 mm |
| Pre-Loaded Spring Force | 0.25 N |
| Spring Force at Working Travel | 0.85 N |
| **ELECTRICAL DATA** | |
| Max. Current Rating | 3.5 A |
| Typical Continuity Resistance | ≤ 20 mOhm |
| **MATERIALS** | |
| Barrel | Brass, gold-plated |
| Spring | Spring Steel, gold-plated |
| Plunger | Brass, gold-plated |

**TIP STYLE · DIAMETER · PLATING**



| D |
|---|
| 1.07M Au |

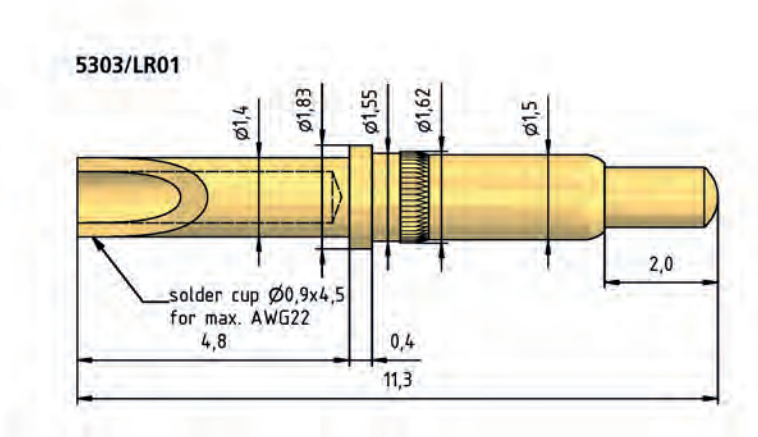


## HOW TO ORDER

| 5303/ | LR01 | - | D | - | 0.85 N | - | Au | - | 1.07 | M |
|---|---|---|---|---|---|---|---|---|---|---|
| 1 | 2 | | 3 | | 4 | | 5 | | 6 | 7 |

1 Series 2 Variant 3 Tip Style 4 Spring Force 5 Tip Plating 6 Tip Diameter 7 Tip Material (only for Brass)

L'IMPULSION
Retrouvez nous sur
www.limpulsion.fr

Battery Probe 100 mil / 2.54 mm

# Series 5303/T01

NEW

| TIP STYLE · DIAMETER · PLATING |
|---|
|  |
| **D** |
| 1.07M Au |

| BENEFIT |
|---|
| THT Variant |
| Short, compact size |
| Board-to-board contacting |
| Tape on Reel |

| MECHANICAL DATA | |
|---|---|
| Center | 2.54 mm / 100 mil |
| Temperature Range | -30 °C - +120 °C |
| Full Travel | 1.40 mm |
| Working Travel | 0.70 mm |
| Pre-Loaded Spring Force | 0.25 N |
| Spring Force at Working Travel | 0.85 N |

| ELECTRICAL DATA | |
|---|---|
| Max. Current Rating | 3.5 A |
| Typical Continuity Resistance | ≤ 20 mOhm |

| MATERIALS | |
|---|---|
| Barrel | Brass, gold-plated |
| Spring | Spring Steel, gold-plated |
| Plunger | Brass, gold-plated |

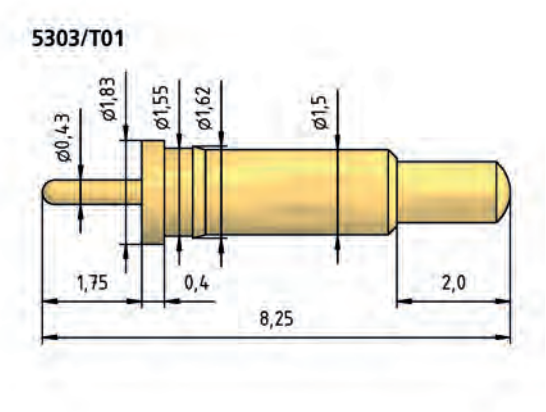


## HOW TO ORDER

| 5303/ | T01 | - | D | - | 0.85 N | - | Au | - | 1.07 | M |
|---|---|---|---|---|---|---|---|---|---|---|
| 1 | 2 | | 3 | | 4 | | 5 | | 6 | 7 |

1 Series 2 Variant 3 Tip Style 4 Spring Force 5 Tip Plating 6 Tip Diameter 7 Tip Material (only for Brass)



L'IMPULSION Retrouvez nous sur www.limpulsion.fr

# Series 5305

Battery Probe 100 mil / 2.54 mm

| BENEFIT | |
|---|---|
| Short, compact size | |
| Board-to-board contacting | |
| SMD - Automated Assembly | |
| Tape on Reel | |
| **MECHANICAL DATA** | |
| Center | 2.54 mm / 100 mil |
| Temperature Range | -30 °C - +120 °C |
| Full Travel | 1.00 mm |
| Spring Force at Full Travel | see High-Temperature Applications |
| **ELECTRICAL DATA** | |
| Max. Current Rating | 1.5 A |
| Typical Continuity Resistance | ≤ 10 mOhm |
| **MATERIALS** | |
| Barrel | Brass, gold-plated |
| Spring | Stainless Steel, gold-plated |
| Plunger | Brass, gold-plated |
| **HIGH-TEMPERATURE APPLICATIONS** | |
| Temperature Range | -40 °C - +250 °C |
| Pre-Loaded Spring Force | 0.40 N |
| Spring Force at Working Travel (Order Index E) | 1.00 N |

**TIP STYLE · DIAMETER · PLATING**



| D |
|---|
| 1.02M Au |

**5305**

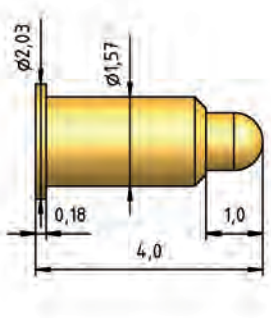


## HOW TO ORDER

| 5305 | - | D | - | 1.0 N | E | - | Au | - | 1.02 | M |
|---|---|---|---|---|---|---|---|---|---|---|
| 1 | | 2 | | 3 | 4 | | 5 | | 6 | 7 |

1 Series 2 Tip Style 3 Spring Force 4 High Temperature 5 Tip Plating
6 Tip Diameter 7 Tip Material (only for Brass)

L'IMPULSION
Retrouvez nous sur
www.limpulsion.fr

Battery Probe 118 mil / 3.0 mm

# Series 5099

## TIP STYLE · DIAMETER · PLATING




| D | D | G | V |
|---|---|---|---|
| 1.00C Au | 1.30C Au | 1.30C Au | 1.30C Au |

## BENEFIT

| |
|---|
| Short, compact size |
| Board-to-board contacting |
| For use in charging units |

## MECHANICAL DATA

| | |
|---|---|
| Center | 3.00 mm / 118 mil |
| Temperature Range | -30 °C - +120 °C |
| Full Travel | 1.20 mm |
| Working Travel | 1.00 mm |
| Pre-Loaded Spring Force | 0.30/ 0.30/ 0.50 N |
| Spring Force at Working Travel | 0.60/ 1.00/ 2.00 N |

## ELECTRICAL DATA

| | |
|---|---|
| Max. Current Rating | 5.0...8.0 A |
| Typical Continuity Resistance | ≤ 10 mOhm |

## MATERIALS

| | |
|---|---|
| Barrel | Brass, gold-plated |
| Spring | Spring Steel, gold-plated |
| Plunger | CuBe, gold-plated |
| Receptacle | Brass, gold-plated |

## RECOMMENDED DIAMETER OF DRILL

| | |
|---|---|
| **with Receptacle** | |
| HP 2361.1 (Trolitax) | 2.29 mm |
| HGW 2372 (Glass filled material) | 2.30 mm |
| **without Receptacle** | |
| HP 2361.1 (Trolitax) | 1.99 mm |
| HGW 2372 (Glass filled material) | 2.00 mm |

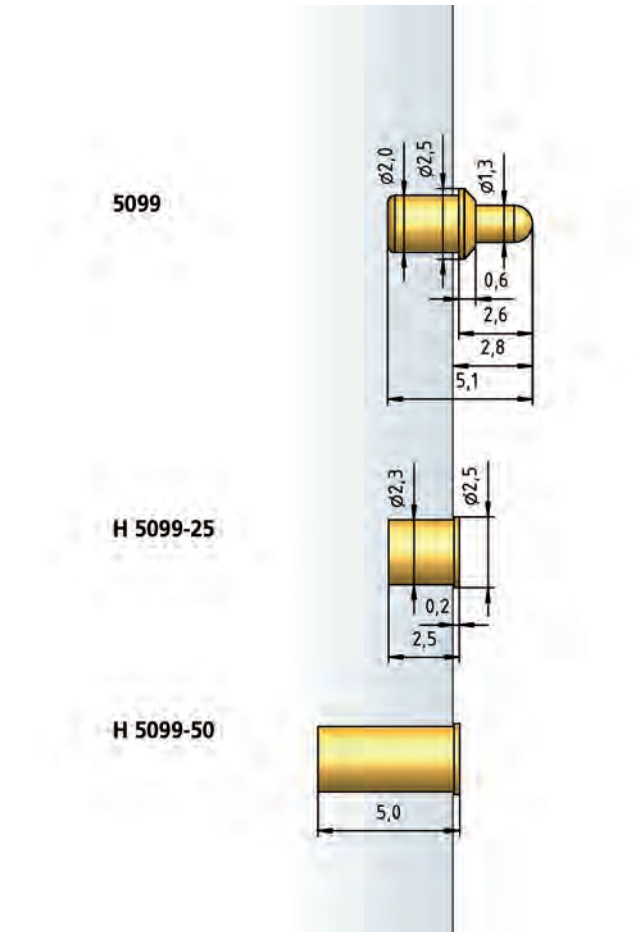


## HOW TO ORDER

| 5099 | - | D | - | 2.0 N | - | Au | - | 1.3 | C |
|---|---|---|---|---|---|---|---|---|---|
| 1 | | 2 | | 3 | | 4 | | 5 | 6 |

1 Series 2 Tip Style 3 Spring Force 4 Tip Plating 5 Tip Diameter
6 Tip Material (only for CuBe)



L'IMPULSION Retrouvez nous sur www.limpulsion.fr

# Series 5099.04

Battery Probe 118 mil / 3.0 mm

| BENEFIT | |
|---|---|
| Long full travel | |
| Board-to-board contacting | |
| For use in charging units | |
| **MECHANICAL DATA** | |
| Center | 3.00 mm / 118 mil |
| Temperature Range | -30 °C - +120 °C |
| Full Travel | 4.00 mm |
| Working Travel | 3.30 mm |
| Pre-Loaded Spring Force | 0.15/ 0.25 N |
| Spring Force at Working Travel | 0.50/ 2.00 N |
| **ELECTRICAL DATA** | |
| Max. Current Rating | 5.0...8.0 A |
| Typical Continuity Resistance | ≤ 20 mOhm |
| **MATERIALS** | |
| Barrel | Brass, gold-plated |
| Spring | Spring Steel, gold-plated |
| Plunger | CuBe, gold-plated |
| Receptacle | Brass, gold-plated |
| **RECOMMENDED DIAMETER OF DRILL** | |
| **with Receptacle** | |
| HP 2361.1 (Trolitax) | 2.29 mm |
| HGW 2372 (Glass filled material) | 2.30 mm |
| **without Receptacle** | |
| HP 2361.1 (Trolitax) | 1.99 mm |
| HGW 2372 (Glass filled material) | 2.00 mm |

| TIP STYLE · DIAMETER · PLATING |
|---|
|  |
| **D4** |
| 1.30C Au |

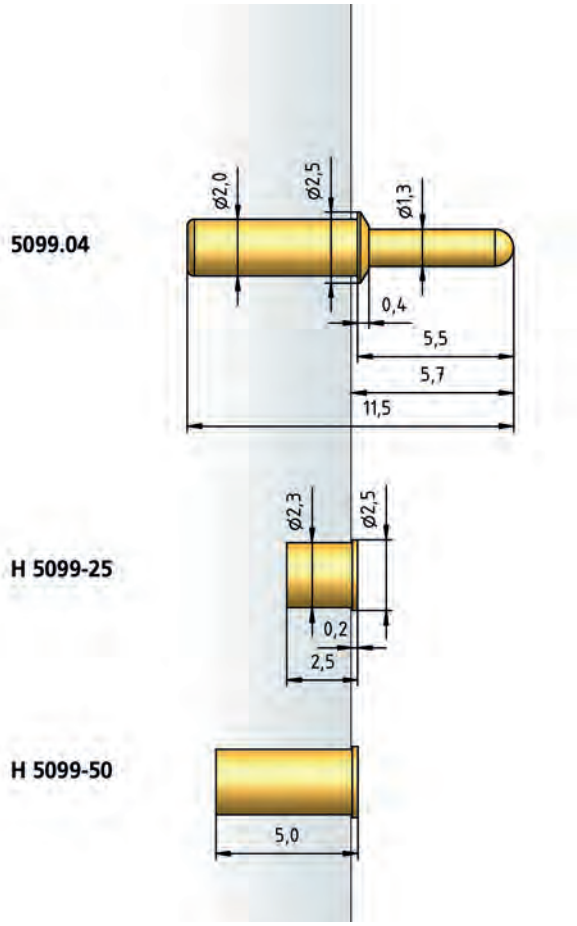


## HOW TO ORDER

| 5099 | .04 | - | D4 | - | 2.0 N | - | Au | - | 1.3 | C |
|---|---|---|---|---|---|---|---|---|---|---|
| 1 | 2 | | 3 | | 4 | | 5 | | 6 | 7 |

1 Series 2 Variant 3 Tip Style 4 Spring Force 5 Tip Plating
6 Tip Diameter 7 Tip Material (only for CuBe)

L'IMPULSION Retrouvez nous sur www.limpulsion.fr

# Battery Probe 138 mil / 3.5 mm

# Series 5099.43

## TIP STYLE · DIAMETER · PLATING



| D |
|---|
| 1.30C Au |

## BENEFIT

| |
|---|
| Position horizontal |
| Board-to-board contacting |
| Tape on Reel |
| SMD - Automated Assembly |
| Individual placement by housing design |

## MECHANICAL DATA

| | |
|---|---|
| Center | 3.50 mm / 138 mil |
| Temperature Range | -30 °C - +120 °C |
| Full Travel | 4.00 mm |
| Working Travel | 3.30 mm |
| Pre-Loaded Spring Force | 0.15/ 0.25 N |
| Spring Force at Working Travel | 0.50/ 2.00 N |

## ELECTRICAL DATA

| | |
|---|---|
| Max. Current Rating | 8.0 A |
| Typical Continuity Resistance | ≤ 20 mOhm |

## MATERIALS

| | |
|---|---|
| Barrel | Brass, gold-plated |
| Spring | Spring Steel, gold-plated |
| Plunger | CuBe, gold-plated |

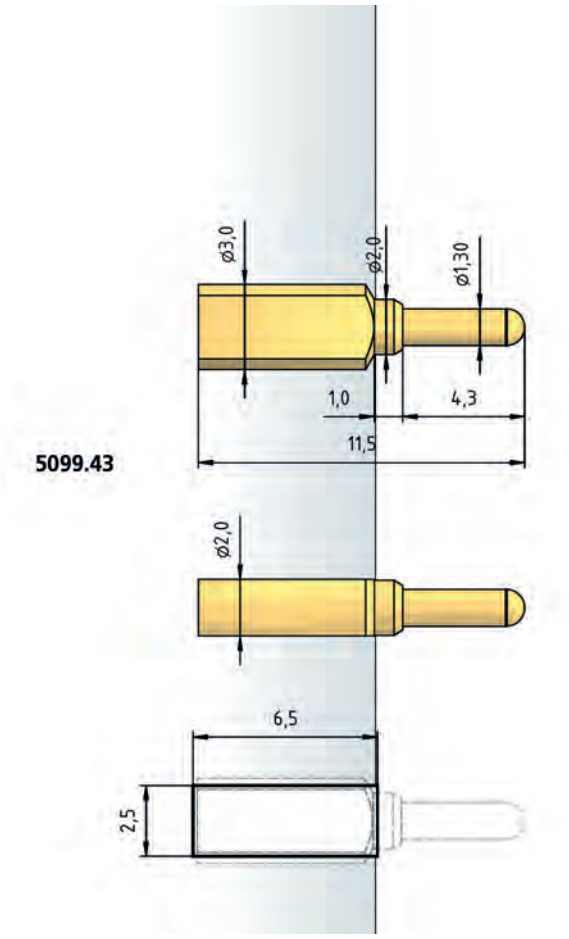


## HOW TO ORDER

| 5099 | .43 | - | D | - | 2.0 N | - | Au | - | 1.3 | C |
|---|---|---|---|---|---|---|---|---|---|---|
| 1 | 2 | | 3 | | 4 | | 5 | | 6 | 7 |

1 Series 2 Variant 3 Tip Style 4 Spring Force 5 Tip Plating
6 Tip Diameter 7 Tip Material (only for CuBe)



L'IMPULSION Retrouvez nous sur www.limpulsion.fr

# Series 5110/S

Battery Probe 160 mil / 4.0 mm

| BENEFIT | |
|---|---|
| Short, compact size | |
| Board-to-board contacting | |
| For use in charging units | |
| **MECHANICAL DATA** | |
| Center | 4.00 mm / 160 mil |
| Temperature Range | -40 °C - +250 °C |
| Full Travel | 3.50 mm |
| Working Travel | 2.80 mm |
| Spring Force at Working Travel | see High-Temperature Applications |
| **ELECTRICAL DATA** | |
| Max. Current Rating | 10.0 A |
| Typical Continuity Resistance | ≤ 10 mOhm |
| **MATERIALS** | |
| Barrel | Brass, gold-plated |
| Spring | Stainless Steel, gold-plated |
| Plunger | CuBe, gold-plated |
| Receptacle | Brass, gold-plated |
| **RECOMMENDED DIAMETER OF DRILL** | |
| HP 2361.1 (Trolitax) | 2.64 mm |
| HGW 2372 (Glass filled material) | 2.65 mm |
| **HIGH-TEMPERATURE APPLICATIONS** | |
| Temperature Range | -40 °C - +250 °C |
| Pre-Loaded Spring Force | 0.25/ 0.30/ 0.45/ 0.50/ 1.00 N |
| Spring Force at Working Travel (Order Index E) | 0.80/ 1.20/ 1.50/ 2.50/ 3.50 N |

**TIP STYLE · DIAMETER · PLATING**



| C | D1 | D | E | F |
|---|---|---|---|---|
| 2.30C Au<br>3.50C Au | 2.30C Au | 2.30C Au | 2.30C Au | 2.30C Au |



| K2 |
|---|
| 2.30C Au |

**5110/S**

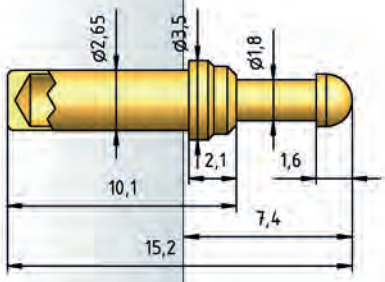


**5110/S (for Tip Style K2)**

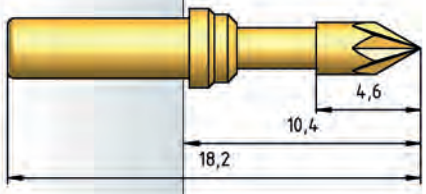


**5110/S.02**

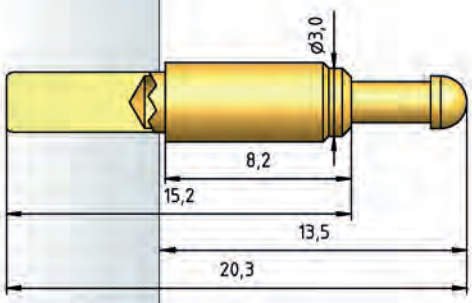


**5110/1 (for Tip Style D1)**

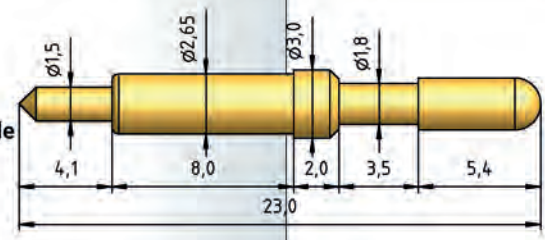


**H 5110**

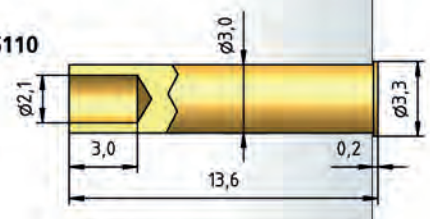


## HOW TO ORDER

| 5110/S | - | D | - | 1.5 N | E | - | Au | - | 2.3 | C |
|---|---|---|---|---|---|---|---|---|---|---|
| 1 | | 2 | | 3 | 4 | | 5 | | 6 | 7 |

1 Series 2 Tip Style 3 Spring Force 4 High Temperature 5 Tip Plating
6 Tip Diameter 7 Tip Material (only for CuBe)

L'IMPULSION Retrouvez nous sur www.limpulsion.fr

Battery Probe 256 mil / 6.5 mm

# Series 5082

## TIP STYLE · DIAMETER · PLATING



| B1D | C | D | E1D | G |
|---|---|---|---|---|
| 4.00M Au | 4.00 Au | 4.00M Au | 4.00M Au | 4.00 Au |

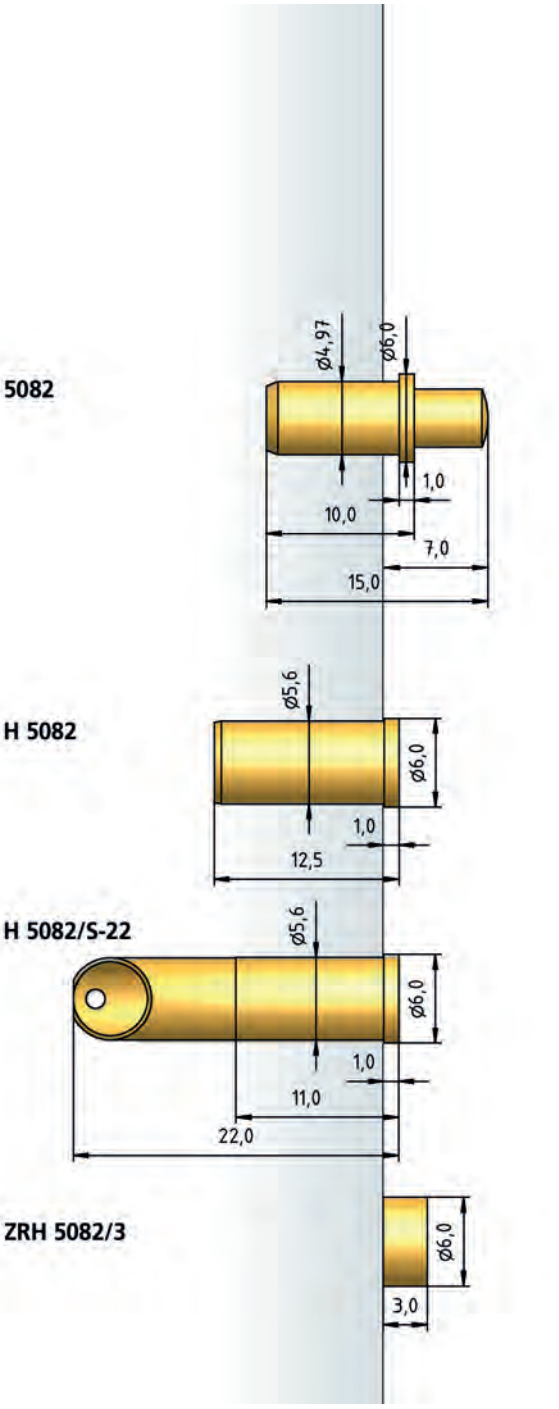


| BENEFIT | |
|---|---|
| Sturdy design | |
| For use in tough conditions | |
| Long Lifetime | |
| Spring forces up to 8.0 N | |
| **MECHANICAL DATA** | |
| Center | 6.50 mm / 256 mil |
| Temperature Range | -40 °C - +250 °C |
| Full Travel | 4.00 mm |
| Working Travel | 3.20 mm |
| Spring Force at Working Travel | see High-Temperature Applications |
| **ELECTRICAL DATA** | |
| Max. Current Rating | 5.0...8.0 A |
| Typical Continuity Resistance | ≤ 30 mOhm |
| **MATERIALS** | |
| Barrel | Brass, gold-plated |
| Spring | Stainless Steel, gold-plated |
| Plunger | Steel, Brass |
| Receptacle | Brass, gold-plated |
| **RECOMMENDED DIAMETER OF DRILL** | |
| **without Receptacles** | |
| HP 2361.1 (Trolitax) | 4.97 mm |
| **with Receptacles** | |
| HP 2361.1 (Trolitax) | 5.59...5.60 mm |
| **HIGH-TEMPERATURE APPLICATIONS** | |
| Temperature Range | -40 °C - +250 °C |
| Pre-Loaded Spring Force | 0.20/ 0.40/ 1.00/ 0.80/ 1.60 N |
| Spring Force at Working Travel | |
| Order Index E) | 0.60/ 1.50/ 3.00/ 4.00/ 8.00 N |

## HOW TO ORDER

| 5082 | - | D | - | 3.0 N | E | - | Au | - | 4.0 | M |
|---|---|---|---|---|---|---|---|---|---|---|
| 1 | | 2 | | 3 | 4 | | 5 | | 6 | 7 |

1 Series 2 Tip Style 3 Spring Force 4 High Temperature 5 Tip Plating
6 Tip Diameter 7 Tip Material (only for Brass)



L'IMPULSION Retrouvez nous sur www.limpulsion.fr

# Series 5082.01

Battery Probe 256 mil / 6.5 mm

| BENEFIT |
|---|
| Sturdy design |
| For use in tough conditions |
| Long lifetime |
| Low contact resistances |
| Spring forces up to 8.0 N |

| MECHANICAL DATA | |
|---|---|
| Center | 6.50 mm / 256 mil |
| Temperature Range | -40 °C - +250 °C |
| Full Travel | 5.00 mm |
| Working Travel | 4.00 mm |
| Spring Force at Working Travel | see High-Temperature Applications |

| ELECTRICAL DATA | |
|---|---|
| **Connector Receptacle** | |
| Max. Current Rating | 5.0...8.0 A |
| Typical Continuity Resistance | ≤ 100 mOhm |
| **Connector Plunger** | |
| Max. Current Rating | 15.0...20.0 A |
| Typical Continuity Resistance | ≤ 10 mOhm |

| MATERIALS | |
|---|---|
| Barrel | Brass, gold-plated |
| Spring | Stainless Steel, gold-plated |
| Plunger | Steel |

| RECOMMENDED DIAMETER OF DRILL | |
|---|---|
| **without Receptacles** | |
| HP 2361.1 (Trolitax) | 4.97 mm |
| **with Receptacles** | |
| HP 2361.1 (Trolitax) | 5.59...5.60 mm |

| HIGH-TEMPERATURE APPLICATIONS | |
|---|---|
| Temperature Range | -40 °C - +250 °C |
| Pre-Loaded Spring Force | 0.20/ 0.40/ 1.00/ 1.60 N |
| Spring Force at Working Travel (Order Index E) | 0.60/ 1.50/ 3.00/ 8.00 N |

## TIP STYLE · DIAMETER · PLATING



| B1 | C | D | G |
|---|---|---|---|
| 4.00 Ni | 4.00 Ni | 4.00 Ni | 4.00 Ni |

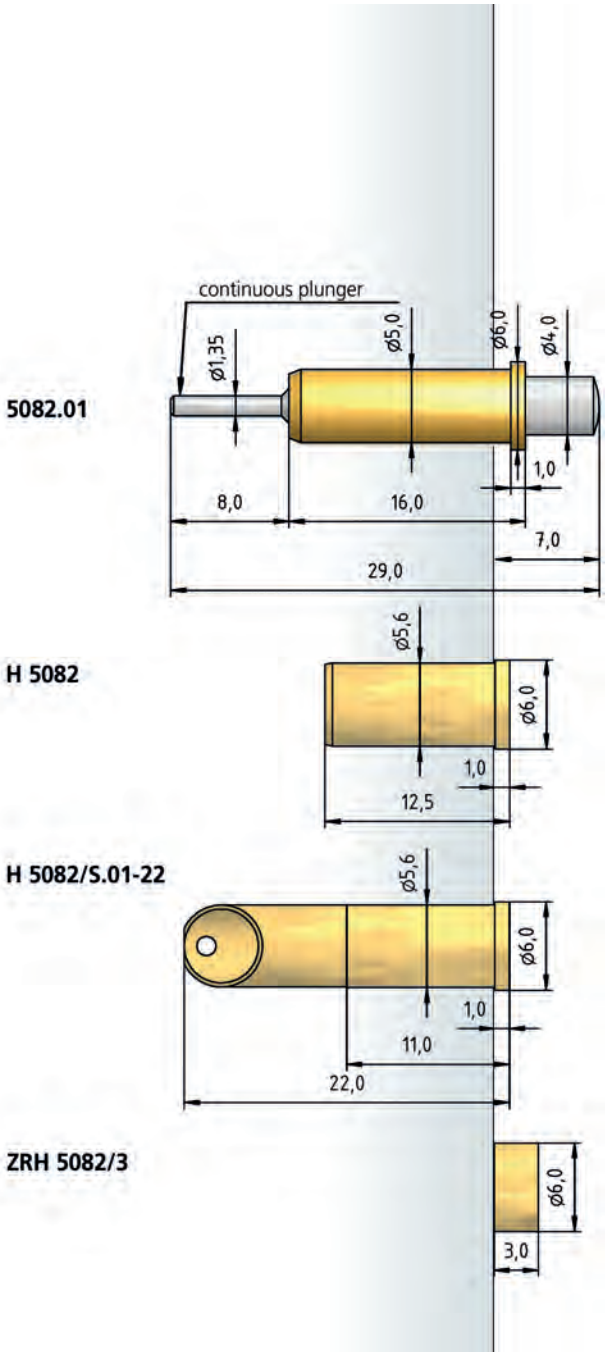


## HOW TO ORDER

| 5082.01 | - | D | - | 3.0 N | E | - | Ni | - | 4.0 |
|---|---|---|---|---|---|---|---|---|---|
| 1 | | 2 | | 3 | 4 | | 5 | | 6 |

1 Series 2 Tip Style 3 Spring Force 4 High Temperature 5 Tip Plating 6 Tip Diameter

Battery Probe 256 mil / 6.5 mm

# Series 5082/L

## TIP STYLE · DIAMETER · PLATING




| C | D |
|---|---|
| 4.00C Au | 4.00C Au |

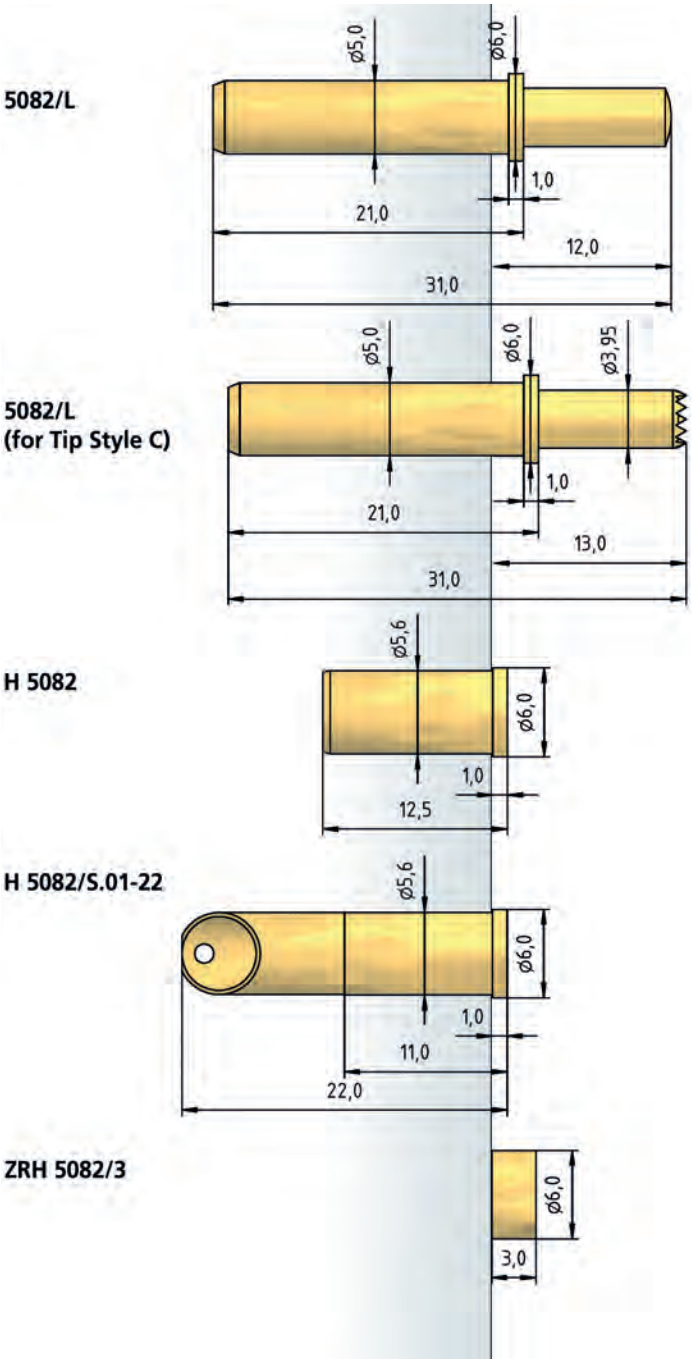


## BENEFIT

- Sturdy design
- For use in tough conditions
- Long lifetime
- Long full travel
- Spring forces up to 8.0 N

## MECHANICAL DATA

| | |
|---|---|
| Center | 6.50 mm / 256 mil |
| Temperature Range | -40 °C - +250 °C |
| Full Travel | 10.00 mm |
| Working Travel | 8.00 mm |
| Spring Force at Working Travel | see High-Temperature Applications |

## ELECTRICAL DATA

| | |
|---|---|
| Max. Current Rating | 5.0...8.0 A |
| Typical Continuity Resistance | ≤ 100 mOhm |

## MATERIALS

| | |
|---|---|
| Barrel | Brass, gold-plated |
| Spring | Stainless Steel, gold-plated |
| Plunger | CuBe |

## RECOMMENDED DIAMETER OF DRILL

| | |
|---|---|
| **without Receptacles** | |
| HP 2361.1 (Trolitax) | 4.97 mm |
| **with Receptacles** | |
| HP 2361.1 (Trolitax) | 5.59...5.60 mm |

## HIGH-TEMPERATURE APPLICATIONS

| | |
|---|---|
| Temperature Range | -40 °C - +250 °C |
| Pre-Loaded Spring Force | 0.40/ 1.00/ 3.00 N |
| Spring Force at Working Travel | |
| (Order Index E) | 1.50/ 3.00/ 8.00 N |

## HOW TO ORDER

| 5082/L | - | D | - | 8.0 N | E | - | Au | - | 4.0 |
|---|---|---|---|---|---|---|---|---|---|
| 1 | | 2 | | 3 | 4 | | 5 | | 6 |

1 Series 2 Tip Style 3 Spring Force 4 High Temperature 5 Tip Plating 6 Tip Diameter

15

# INTERFACE PIN BLOCKS

**Interface Pin Blocks serve the same function as battery probes (see page 180). They can be used as a charging contact in almost all mobile devices, but also for connecting PCBs and as signal conductors, etc.**

In such cases, the important advantage is that our standard allows the simultaneous positioning of up to 20 contacts which can be soldered onto the PCB using reflow processes.

As a result of our considerable experience in the manufacturing of injection moulding tools for the connection technology sector, PTR HARTMANN offers complete solutions including plastic carriers, tape-and-reel, and "pick & place" pads, including for individually adapted products. Other types of packing, for example trays, are also available for small quantities and less-automated manufacturing processes. We develop professional solutions together with our customers, and then implement them as scheduled.

The quality of our contacts complies with internationally recognized test scenarios. Our interface pin blocks are approved with UL certification in both the USA and Canada regions.

**Series 5322 has passed vibration and shock tests without any measurable contact loss according to the following standards:**

- IEC 60068-2-6, Test Fc: Vibration (sinusoidal)
- IEC 60068-2-27, Test Ea and guidance: Shock
- IEC 60512-2-5, Test 2e: Contact disturbance

L'IMPULSION Retrouvez nous sur www.limpulsion.fr

| SERIES | CENTER | PAGE |
|---|---|---|
| FKB5322 - SMD | 100 mil / 2.54 mm | 196 |
| PKB5322 - SMD | 100 mil / 2.54 mm | 197 |
| FKB5322 - L01 | 100 mil / 2.54 mm | 198 |
| FKB5322 - T01 | 100 mil / 2.54 mm | 199 |
| FKB5458 - SMD | 50 mil / 1.27 mm | 200 |
| FKB5457 - SMD | 100 mil / 2.54 mm | 201 |

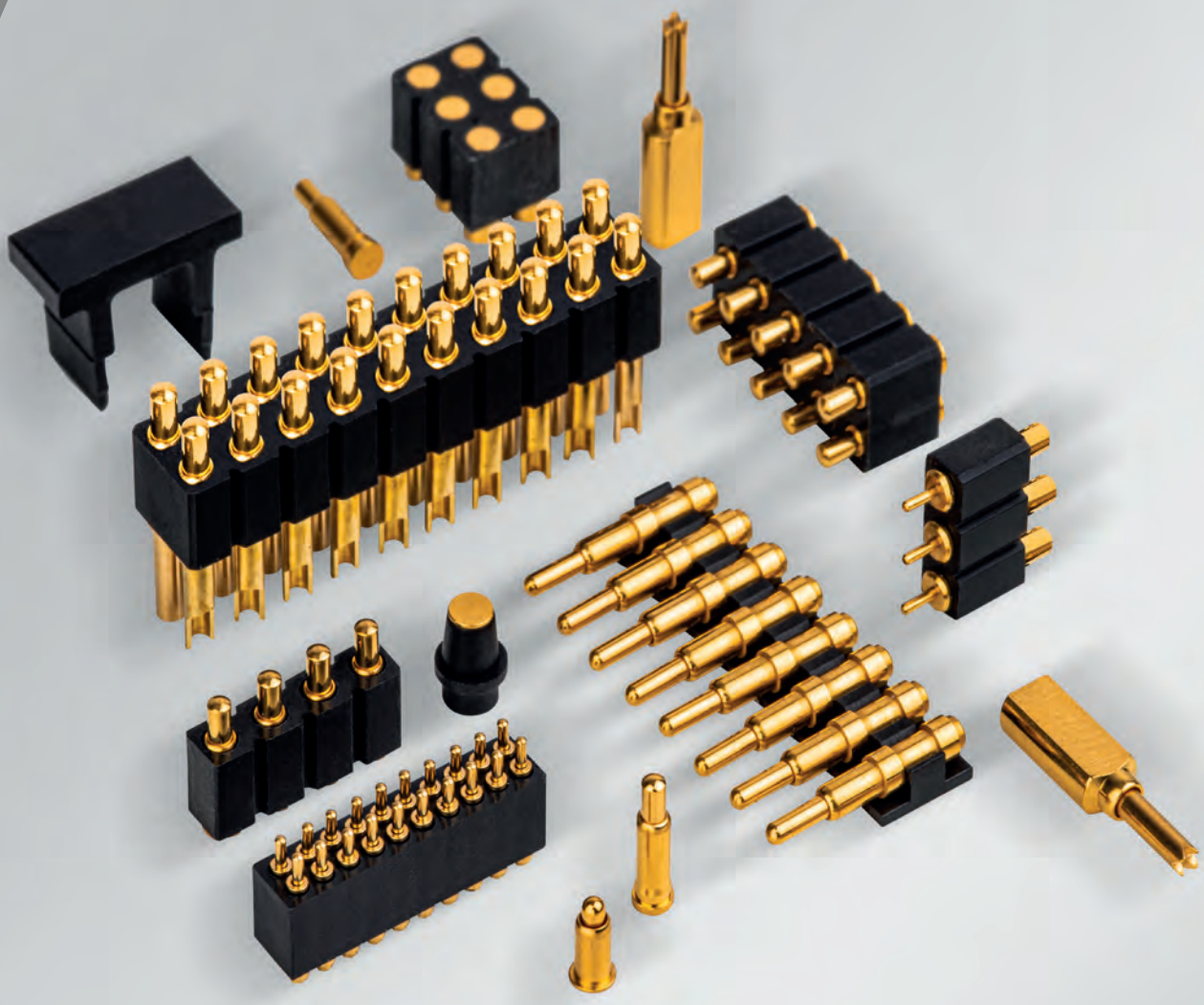



L'IMPULSION
Retrouvez nous sur
www.limpulsion.fr

# Series FKB5322 - SMD

Interface Pin Blocks 100 mil / 2.54 mm

| | | |
|---|---|---|
| **BENEFIT** | | |
| Short, compact size | | |
| Board-to-board contacting | | |
| Tape on Reel - SMD / Automated Assembly | | |
| 2 to 20 poles / 1 and 2 rows available | | |
| **MECHANICAL DATA** | | |
| Center | 2.54 mm / 100 mil | |
| Full Travel | 1.40 mm | |
| Working Travel | 0.70 mm | |
| Pre-Loaded Spring Force | 0.25 N | |
| Spring Force at Working Travel | 0.85 N | |
| **ELECTRICAL DATA** | | |
| Max. Current Rating | 3.5 A | |
| Typical Continuity Resistance | ≤ 20 mOhm | |
| **MATERIALS** | | |
| Barrel | Brass, gold-plated | |
| Spring | Spring Steel, gold-plated | |
| Plunger | Brass, gold-plated | |
| Test Probe Block | PA | |
| **TAPE ON REEL (EN 60286-3)** | | |
| Tape on reel width | 24 mm / 44 mm | |
| Spooling diameter | 15“ | |
| Number of components | 800 | |
| Pitch | 12 mm | |
| **OPERATING LIFE** | | |
| Cycle | 50.000 | |
| **RATINGS** | | |
| Rated Current | 3.5 A | 2.0 A |
| Rated Voltage - DC | 150 V | 150 V |
| Rated Voltage - AC | 100 V | 100 V |
| Flammability Class | UL 94 V-0 | UL 94 V-0 |

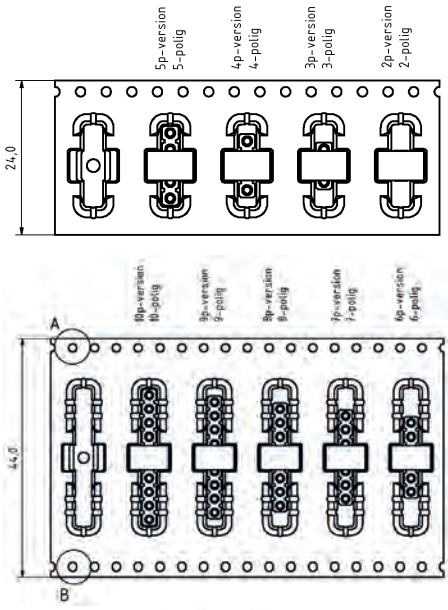


**Soldering profile reflow**

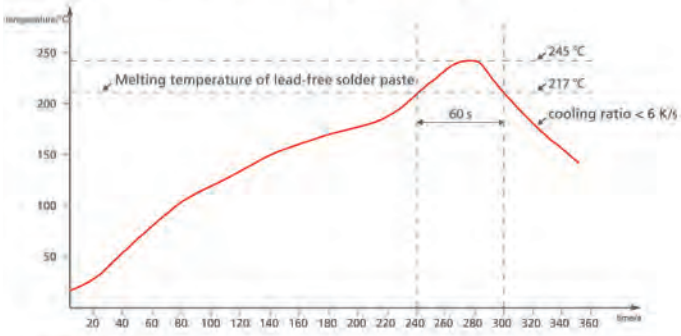


**FKB5322/1**

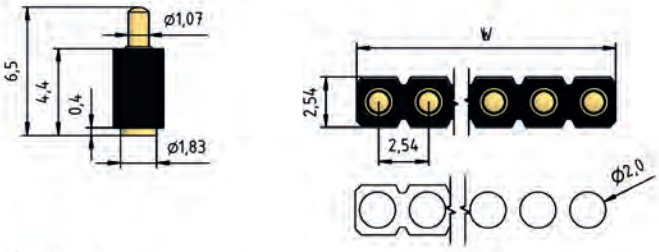


**FKB5322/2**

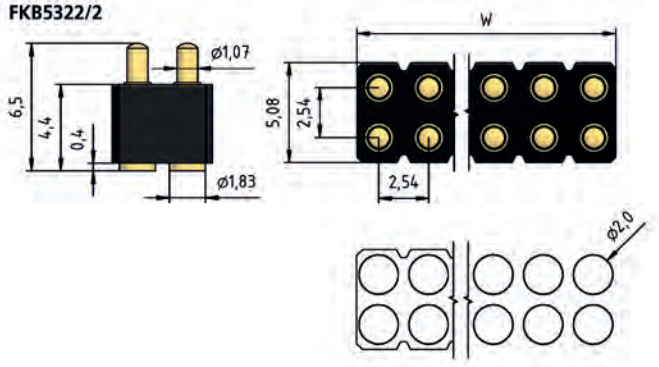


**ORDER DATA**

| Poles | Width (mm) | Article Designation | Article Number | PU |
|---|---|---|---|---|
| FKB 5322/1 | | | | |
| 2 | 5.08 | FKB 5322/1-02-65-R24 | 65322F30265 | PCS800 |
| 3 | 7.62 | FKB 5322/1-03-65-R24 | 65322F30365 | PCS800 |
| 4 | 10.16 | FKB 5322/1-04-65-R24 | 65322F30465 | PCS800 |
| 5 | 12.70 | FKB 5322/1-05-65-R24 | 65322F30565 | PCS800 |
| 6 | 15.24 | FKB 5322/1-06-65-R44 | 65322F30665 | PCS800 |
| 7 | 17.78 | FKB 5322/1-07-65-R44 | 65322F30765 | PCS800 |
| 8 | 20.32 | FKB 5322/1-08-65-R44 | 65322F30865 | PCS800 |
| 9 | 22.86 | FKB 5322/1-09-65-R44 | 65322F30965 | PCS800 |
| 10 | 25.40 | FKB 5322/1-10-65-R44 | 65322F31065 | PCS800 |
| FKB 5322/2 | | | | |
| 4 | 5.08 | FKB 5322/2-04-65-R24 | 65322F40465 | PCS800 |
| 6 | 7.62 | FKB 5322/2-06-65-R24 | 65322F40665 | PCS800 |
| 8 | 10.16 | FKB 5322/2-08-65-R24 | 65322F40865 | PCS800 |
| 10 | 12.70 | FKB 5322/2-10-65-R24 | 65322F41065 | PCS800 |
| 12 | 15.24 | FKB 5322/2-12-65-R44 | 65322F41265 | PCS800 |
| 14 | 17.78 | FKB 5322/2-14-65-R44 | 65322F41465 | PCS800 |
| 16 | 20.32 | FKB 5322/2-16-65-R44 | 65322F41665 | PCS800 |
| 18 | 22.86 | FKB 5322/2-18-65-R44 | 65322F41865 | PCS800 |
| 20 | 25.40 | FKB 5322/2-20-65-R44 | 65322F42065 | PCS800 |

## HOW TO ORDER

| FKB5322 | /1 | - | 2 | - | 65 | - | R24 |
|---|---|---|---|---|---|---|---|
| 1 | 2 | | 3 | | 4 | | 5 |

1 Series 2 Number of Rows 3 Poles 4 Installation Height 5 Tape on Reel

L'IMPULSION
Retrouvez nous sur
www.limpulsion.fr

Interface Pin Blocks 100 mil / 2.54 mm

# Series PKB5322 - SMD

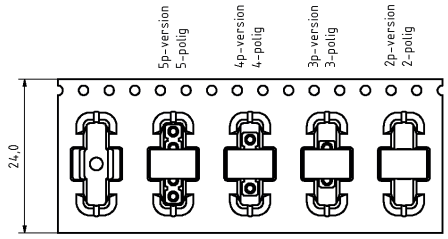


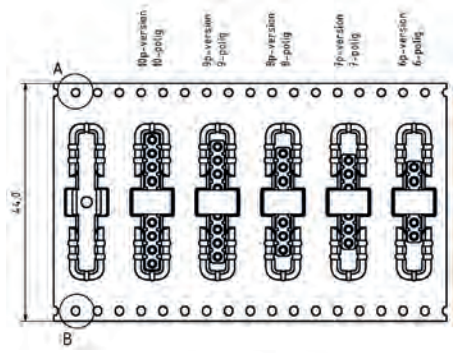


**Soldering profile reflow**

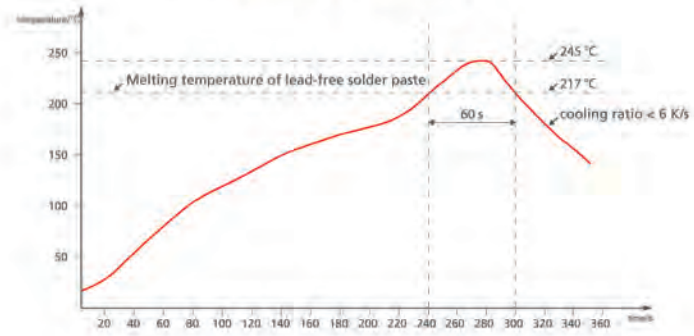


**PKB5322/1**

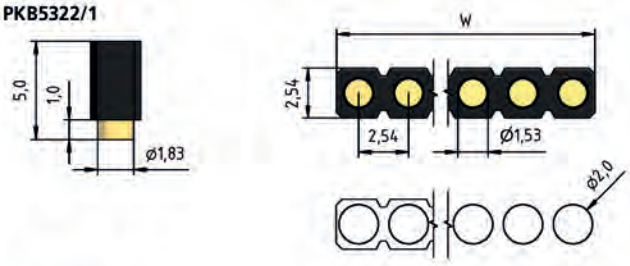


**PKB5322/2**

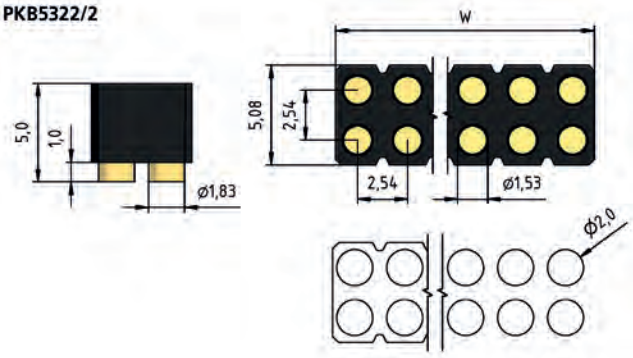


| | | |
|---|---|---|
| **BENEFIT** | | |
| Short, compact size | | |
| Board-to-board contacting | | |
| Tape on Reel - SMD / Automated Assembly | | |
| 2 to 20 poles / 1 and 2 rows available | | |
| **MECHANICAL DATA** | | |
| Center | 2.54 mm / 100 mil | |
| **ELECTRICAL DATA** | | |
| Max. Current Rating | 3.5 A | |
| Typical Continuity Resistance | ≤ 20 mOhm | |
| **MATERIALS** | | |
| PAD-Contact | Brass, gold-plated | |
| Test Probe Block | PA | |
| **TAPE ON REEL (EN 60286-3)** | | |
| Tape on reel width | 24 mm / 44 mm | |
| Spooling diameter | 15“ | |
| Number of components | 800 | |
| Pitch | 12 mm | |
| **RATINGS** | | |
| Rated Current | 3.5 A | 2.0 A |
| Rated Voltage - DC | 150 V | 150 V |
| Rated Voltage - AC | 100 V | 100 V |
| Flammability Class | UL 94 V-0 | UL 94 V-0 |

**ORDER DATA**

| Poles | Width (mm) | Article Designation | Article Number | PU |
|---|---|---|---|---|
| PKB 5322/1 | | | | |
| 2 | 5.08 | PKB 5322/1-02-50-R24 | 65322P30250 | PCS800 |
| 3 | 7.62 | PKB 5322/1-03-50-R24 | 65322P30350 | PCS800 |
| 4 | 10.16 | PKB 5322/1-04-50-R24 | 65322P30450 | PCS800 |
| 5 | 12.70 | PKB 5322/1-05-50-R24 | 65322P30550 | PCS800 |
| 6 | 15.24 | PKB 5322/1-06-50-R44 | 65322P30650 | PCS800 |
| 7 | 17.78 | PKB 5322/1-07-50-R44 | 65322P30750 | PCS800 |
| 8 | 20.32 | PKB 5322/1-08-50-R44 | 65322P30850 | PCS800 |
| 9 | 22.86 | PKB 5322/1-09-50-R44 | 65322P30950 | PCS800 |
| 10 | 25.40 | PKB 5322/1-10-50-R44 | 65322P31050 | PCS800 |
| PKB 5322/2 | | | | |
| 4 | 5.08 | PKB5322/2-04-50-R24 | 65322P40450 | PCS800 |
| 6 | 7.62 | PKB5322/2-06-50-R24 | 65322P40650 | PCS800 |
| 8 | 10.16 | PKB5322/2-08-50-R24 | 65322P40850 | PCS800 |
| 10 | 12.70 | PKB5322/2-10-50-R24 | 65322P41050 | PCS800 |
| 12 | 15.24 | PKB5322/2-12-50-R44 | 65322P41250 | PCS800 |
| 14 | 17.78 | PKB5322/2-14-50-R44 | 65322P41450 | PCS800 |
| 16 | 20.32 | PKB5322/2-16-50-R44 | 65322P41650 | PCS800 |
| 18 | 22.86 | PKB5322/2-18-50-R44 | 65322P41850 | PCS800 |
| 20 | 25.40 | PKB5322/2-20-50-R44 | 65322P42050 | PCS800 |

## HOW TO ORDER

| PKB5322 | /1 | - | 2 | - | 50 | - | R24 |
|---|---|---|---|---|---|---|---|
| 1 | 2 | | 3 | | 4 | | 5 |

1 Series 2 Number of Rows 3 Poles 4 Installation Height 5 Tape on Reel



L'IMPULSION Retrouvez nous sur www.limpulsion.fr

NEW

# Series FKB5322 - L01

Interface Pin Blocks 100 mil / 2.54 mm

| BENEFIT | |
|---|---|
| Short, compact size | |
| Connection with wire and strange wire possible | |
| 2 to 20 poles / 1 and 2 rows available | |
| **MECHANICAL DATA** | |
| Center | 2.54 mm / 100 mil |
| Full Travel | 1.40 mm |
| Working Travel | 0.70 mm |
| Pre-Loaded Spring Force | 0.25 N |
| Spring Force at Working Travel | 0.85 N |
| **ELECTRICAL DATA** | |
| Max. Current Rating | 3.5 A |
| Typical Continuity Resistance | ≤ 20 mOhm |
| **MATERIALS** | |
| Barrel | Brass, gold-plated |
| Spring | Spring Steel, gold-plated |
| Plunger | Brass, gold-plated |
| Test Probe Block | PA |
| **OPERATING LIFE** | |
| Cycle | 50.000 |

**ORDER DATA**

| Poles | Width (mm) | Article Designation | Article Number | PU |
|---|---|---|---|---|
| FKB 5322/1 - L01 | | | | |
| 2 | 5.08 | FKB 5322/1-02-65-L01 | 65322F30265L | PCS100 |
| 3 | 7.62 | FKB 5322/1-03-65-L01 | 65322F30365L | PCS100 |
| 4 | 10.16 | FKB 5322/1-04-65-L01 | 65322F30465L | PCS100 |
| 5 | 12.70 | FKB 5322/1-05-65-L01 | 65322F30565L | PCS100 |
| 6 | 15.24 | FKB 5322/1-06-65-L01 | 65322F30665L | PCS100 |
| 7 | 17.78 | FKB 5322/1-07-65-L01 | 65322F30765L | PCS100 |
| 8 | 20.32 | FKB 5322/1-08-65-L01 | 65322F30865L | PCS100 |
| 9 | 22.86 | FKB 5322/1-09-65-L01 | 65322F30965L | PCS100 |
| 10 | 25.40 | FKB 5322/1-10-65-L01 | 65322F31065L | PCS100 |
| FKB 5322/2 - L01 | | | | |
| 4 | 5.08 | FKB 5322/2-04-65-L01 | 65322F40465L | PCS100 |
| 6 | 7.62 | FKB 5322/2-06-65-L01 | 65322F40665L | PCS100 |
| 8 | 10.16 | FKB 5322/2-08-65-L01 | 65322F40865L | PCS100 |
| 10 | 12.70 | FKB 5322/2-10-65-L01 | 65322F41065L | PCS100 |
| 12 | 15.24 | FKB 5322/2-12-65-L01 | 65322F41265L | PCS100 |
| 14 | 17.78 | FKB 5322/2-14-65-L01 | 65322F41465L | PCS100 |
| 16 | 20.32 | FKB 5322/2-16-65-L01 | 65322F41665L | PCS100 |
| 18 | 22.86 | FKB 5322/2-18-65-L01 | 65322F41865L | PCS100 |
| 20 | 25.40 | FKB 5322/2-20-65-L01 | 65322F42065L | PCS100 |

**FKB5322/1-L01**

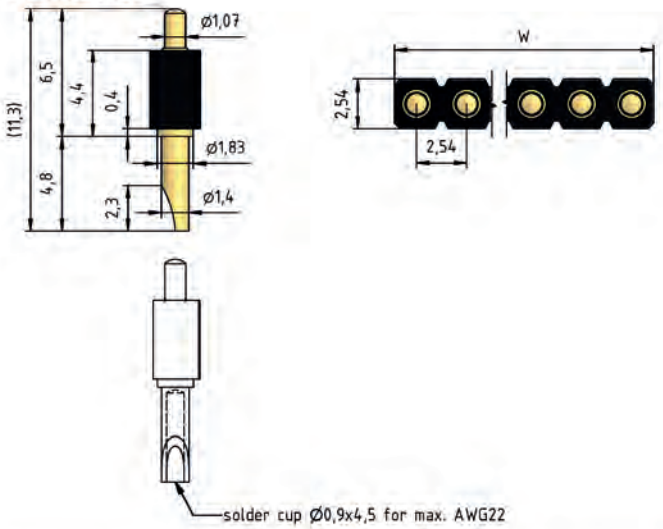


**FKB5322/2-L01**

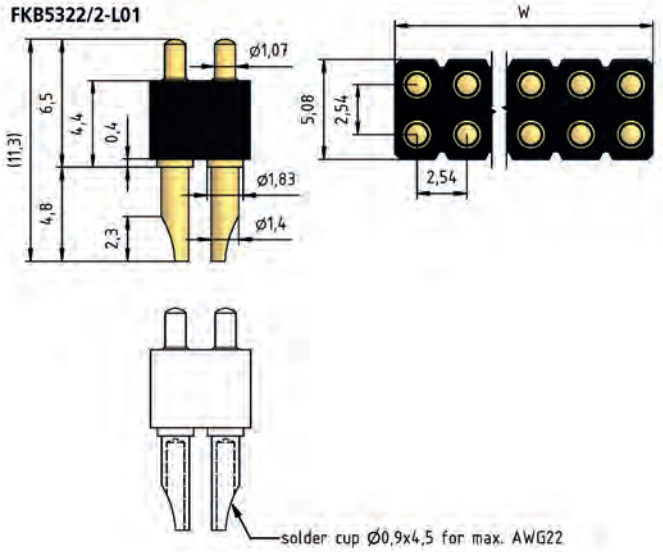


## HOW TO ORDER

| FKB5322 | /1 | - | 2 | - | 65 | - | L01 |
|---|---|---|---|---|---|---|---|
| 1 | 2 | | 3 | | 4 | | 5 |

1 Series 2 Number of Rows 3 Poles 4 Installation Height 5 Variant

L'IMPULSION
Retrouvez nous sur
www.limpulsion.fr

Interface Pin Blocks 100 mil / 2.54 mm

# Series FKB5322 - T01

NEW

| BENEFIT | |
|---|---|
| Short, compact size | |
| Board-to-board contacting | |
| Tape on Reel | |
| 2 to 20 poles / 1 and 2 rows available | |
| **MECHANICAL DATA** | |
| Center | 2.54 mm / 100 mil |
| Full Travel | 1.40 mm |
| Working Travel | 0.70 mm |
| Pre-Loaded Spring Force | 0.25 N |
| Spring Force at Working Travel | 0.85 N |
| **ELECTRICAL DATA** | |
| Max. Current Rating | 3.5 A |
| Typical Continuity Resistance | ≤ 20 mOhm |
| **MATERIALS** | |
| Barrel | Brass, gold-plated |
| Spring | Spring Steel, gold-plated |
| Plunger | Brass, gold-plated |
| Test Probe Block | PA |
| **OPERATING LIFE** | |
| Cycle | 50.000 |

**Soldering profile reflow**

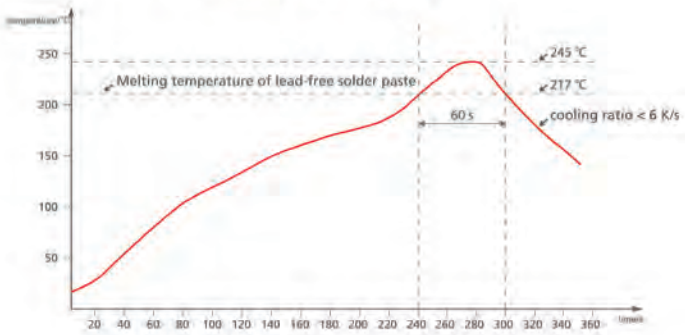


**FKB5322/1-T01**

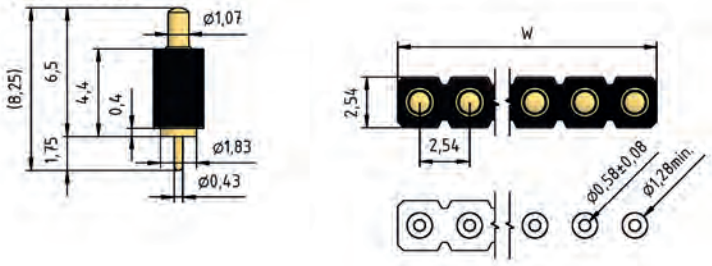


**FKB5322/2-T01**

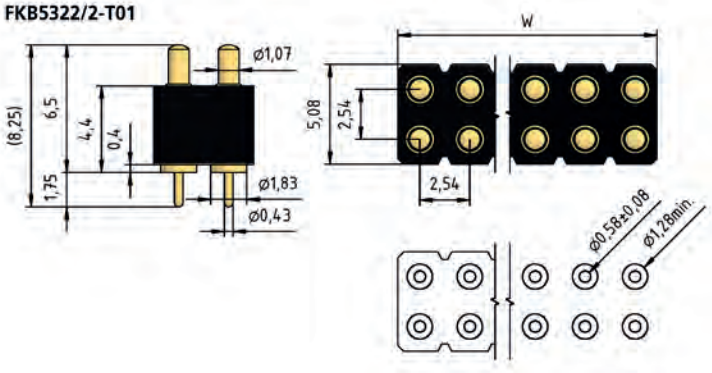


**ORDER DATA**

| Poles | Width (mm) | Article Designation | Article Number | PU |
|---|---|---|---|---|
| FKB 5322/1 - T01 | | | | |
| 2 | 5.08 | FKB 5322/1-02-65-T01 | 65322F30265T | PCS100 |
| 3 | 7.62 | FKB 5322/1-03-65-T01 | 65322F30365T | PCS100 |
| 4 | 10.16 | FKB 5322/1-04-65-T01 | 65322F30465T | PCS100 |
| 5 | 12.70 | FKB 5322/1-05-65-T01 | 65322F30565T | PCS100 |
| 6 | 15.24 | FKB 5322/1-06-65-T01 | 65322F30665T | PCS100 |
| 7 | 17.78 | FKB 5322/1-07-65-T01 | 65322F30765T | PCS100 |
| 8 | 20.32 | FKB 5322/1-08-65-T01 | 65322F30865T | PCS100 |
| 9 | 22.86 | FKB 5322/1-09-65-T01 | 65322F30965T | PCS100 |
| 10 | 25.40 | FKB 5322/1-10-65-T01 | 65322F31065T | PCS100 |
| FKB 5322/2 - T01 | | | | |
| 4 | 5.08 | FKB 5322/2-04-65-T01 | 65322F40465T | PCS100 |
| 6 | 7.62 | FKB 5322/2-06-65-T01 | 65322F40665T | PCS100 |
| 8 | 10.16 | FKB 5322/2-08-65-T01 | 65322F40865T | PCS100 |
| 10 | 12.70 | FKB 5322/2-10-65-T01 | 65322F41065T | PCS100 |
| 12 | 15.24 | FKB 5322/2-12-65-T01 | 65322F41265T | PCS100 |
| 14 | 17.78 | FKB 5322/2-14-65-T01 | 65322F41465T | PCS100 |
| 16 | 20.32 | FKB 5322/2-16-65-T01 | 65322F41665T | PCS100 |
| 18 | 22.86 | FKB 5322/2-18-65-T01 | 65322F41865T | PCS100 |
| 20 | 25.40 | FKB 5322/2-20-65-T01 | 65322F42065T | PCS100 |

## HOW TO ORDER

| FKB5322 | /1 | - | 2 | - | 65 | - | T01 |
|---|---|---|---|---|---|---|---|
| 1 | 2 | | 3 | | 4 | | 5 |

1 Series 2 Number of Rows 3 Poles 4 Installation Height 5 Variant



L'IMPULSION Retrouvez nous sur www.limpulsion.fr

NEW

# Series FKB5458 - SMD

Interface Pin Blocks 50 mil / 1.27 mm

| BENEFIT |
|---|
| Interface Pin Block for Center 50 mil |
| Short, compact size |
| Board-to-board contacting |
| Tape on Reel - SMD |
| 2 to 20 poles / 1 and 2 rows available |

| MECHANICAL DATA | |
|---|---|
| Center | 1.27 mm / 50 mil |
| Full Travel | 1.40 mm |
| Working Travel | 0.70 mm |
| Pre-Loaded Spring Force | 0.25 N |
| Spring Force at Working Travel | 0.60 N |

| ELECTRICAL DATA | |
|---|---|
| Max. Current Rating | 2.0 A |
| Typical Continuity Resistance | ≤ 20 mOhm |

| MATERIALS | |
|---|---|
| Barrel | Brass, gold-plated |
| Spring | Stainless Steel, gold-plated |
| Plunger | Brass, gold-plated |
| Test Probe Block | PA |

| OPERATING LIFE | |
|---|---|
| Cycle | 50.000 |

## ORDER DATA

| Poles | Width (mm) | Article Designation | Article Number | PU |
|---|---|---|---|---|
| FKB 5458/1 | | | | |
| 2 | 2.97 | FKB 5458/1-02-64 | 65458F10264T | PCS100 |
| 3 | 4.24 | FKB 5458/1-03-64 | 65458F10364T | PCS100 |
| 4 | 5.51 | FKB 5458/1-04-64 | 65458F10464T | PCS100 |
| 5 | 6.78 | FKB 5458/1-05-64 | 65458F10564T | PCS100 |
| 6 | 8.05 | FKB 5458/1-06-64 | 65458F10664T | PCS100 |
| 7 | 9.32 | FKB 5458/1-07-64 | 65458F10764T | PCS100 |
| 8 | 10.59 | FKB 5458/1-08-64 | 65458F10864T | PCS100 |
| 9 | 11.86 | FKB 5458/1-09-64 | 65458F10964T | PCS100 |
| 10 | 13.13 | FKB 5458/1-10-64 | 65458F11064T | PCS100 |
| FKB 5458/2 | | | | |
| 4 | 2.97 | FKB 5458/2-04-64 | 65458F20464T | PCS100 |
| 6 | 4.24 | FKB 5458/2-06-64 | 65458F20664T | PCS100 |
| 8 | 5.51 | FKB 5458/2-08-64 | 65458F20864T | PCS100 |
| 10 | 6.78 | FKB 5458/2-10-64 | 65458F21064T | PCS100 |
| 12 | 8.05 | FKB 5458/2-12-64 | 65458F21264T | PCS100 |
| 14 | 9.32 | FKB 5458/2-14-64 | 65458F21464T | PCS100 |
| 16 | 10.59 | FKB 5458/2-16-64 | 65458F21664T | PCS100 |
| 18 | 11.86 | FKB 5458/2-18-64 | 65458F21864T | PCS100 |
| 20 | 13.13 | FKB 5458/2-20-64 | 65458F22064T | PCS100 |

**Soldering profile reflow**

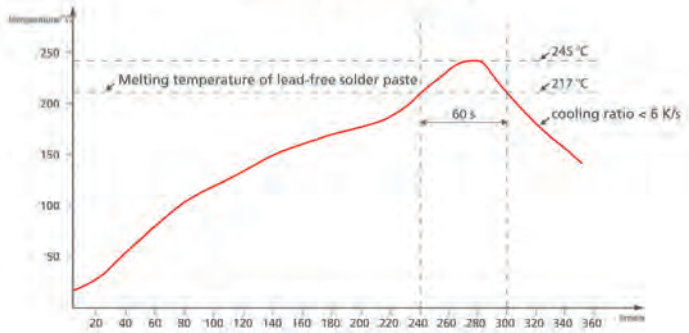


**FKB5458/1**

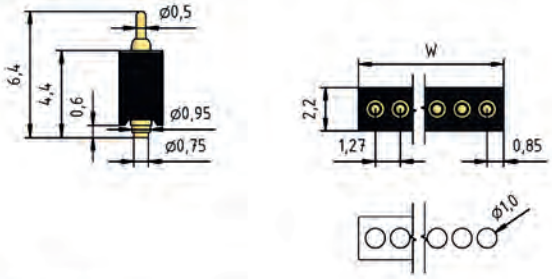


**FKB5458/2**

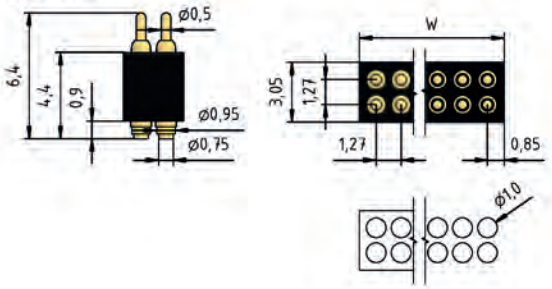


## HOW TO ORDER

| FKB5458 | /1 | - | 2 | - | 64 |
|---|---|---|---|---|---|
| 1 | 2 | | 3 | | 4 |

1 Series 2 Number of Rows 3 Poles 4 Installation Height

L'IMPULSION
Retrouvez nous sur
www.limpulsion.fr

Interface Pin Blocks 100 mil / 2.54 mm

# Series FKB5457 - SMD

NEW

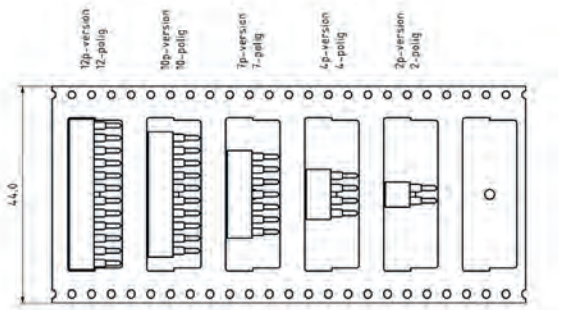


**Soldering profile reflow**

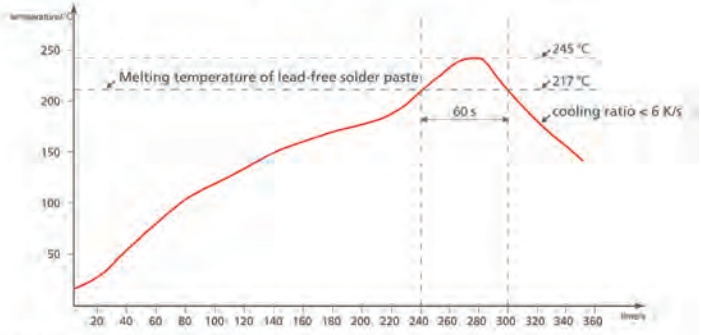


**FKB5457/1**

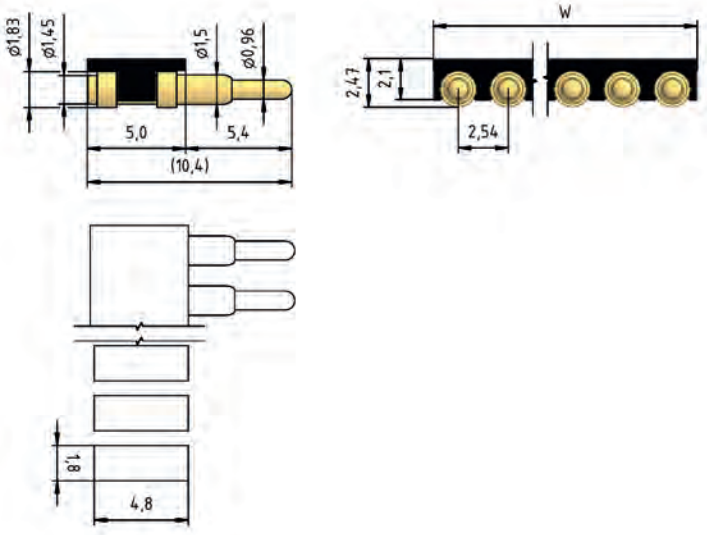


| BENEFIT | |
|---|---|
| Position horizontal | |
| Short, compact size | |
| Tape on Reel - SMD | |
| 2 to 12 poles available | |
| **MECHANICAL DATA** | |
| Center | 2.54 mm / 100 mil |
| Full Travel | 2.00 mm |
| Working Travel | 1.50 mm |
| Pre-Loaded Spring Force | 0.30 N |
| Spring Force at Working Travel | 1.00 N |
| **ELECTRICAL DATA** | |
| Max. Current Rating | 3.5 A |
| Typical Continuity Resistance | ≤ 20 mOhm |
| **MATERIALS** | |
| Barrel | Brass, gold-plated |
| Spring | Spring Steel, gold-plated |
| Plunger | Brass, gold-plated |
| Test Probe Block | PA |
| **TAPE ON REEL (EN 60286-3)** | |
| Tape on reel width | 44 mm |
| Spooling diameter | 15“ |
| Number of components | 1600 |
| Pitch | 16 mm |
| **OPERATING LIFE** | |
| Cycle | 50.000 |

**ORDER DATA**

| Poles | Width (mm) | Article Designation | Article Number | PU |
|---|---|---|---|---|
| FKB 5457/1 | | | | |
| 2 | 5.08 | FKB 5457/1-02-104-R44 | 65457F202104 | PCS800 |
| 3 | 7.62 | FKB 5457/1-03-104-R44 | 65457F203104 | PCS800 |
| 4 | 10.16 | FKB 5457/1-04-104-R44 | 65457F204104 | PCS800 |
| 5 | 12.70 | FKB 5457/1-05-104-R44 | 65457F205104 | PCS800 |
| 6 | 15.24 | FKB 5457/1-06-104-R44 | 65457F206104 | PCS800 |
| 7 | 17.78 | FKB 5457/1-07-104-R44 | 65457F207104 | PCS800 |
| 8 | 20.32 | FKB 5457/1-08-104-R44 | 65457F208104 | PCS800 |
| 9 | 22.86 | FKB 5457/1-09-104-R44 | 65457F209104 | PCS800 |
| 10 | 25.40 | FKB 5457/1-10-104-R44 | 65457F210104 | PCS800 |
| 11 | 27.94 | FKB 5457/1-11-104-R44 | 65457F211104 | PCS800 |
| 12 | 30.48 | FKB 5457/1-12-104-R44 | 65457F212104 | PCS800 |

## HOW TO ORDER

| FKB5457 | /1 | - | 2 | - | 104 | - | R44 |
|---|---|---|---|---|---|---|---|
| 1 | | | 2 | | 3 | | 4 | | 5 |

1 Series 2 Number of Rows 3 Poles 4 Installation Height 5 Tape on Reel



L'IMPULSION
Retrouvez nous sur
www.limpulsion.fr

# COAXIAL TEST PROBES

**Coaxial Test Probes – also known as Kelvin Test Probes – consist of two independent test probes which are insulated from each other.**

The inner conductor and outer probe operate and "give" independently of each other. Normally, the current flows via the outer probe, and the voltage drops are measured via the inner conductor.

In addition to a standard type which can be plugged in, we also offer a threaded type which can be screwed 2.0 mm in using a conventional tool (socket head wrench).

L'IMPULSION
Retrouvez nous sur
www.limpulsion.fr

| SERIES | CENTER | PAGE |
|---|---|---|
| 5207 | 256 mil / 6.50 mm | 204 |
| 5207/G | 256 mil / 6.50 mm | 205 |





L'IMPULSION
Retrouvez nous sur
www.limpulsion.fr

# Series 5207

Coaxial Test Probe 256 mil / 6.5 mm

| BENEFIT | |
|---|---|
| Four-pole measurement | |
| Compact design | |
| Inner and outer conductor are spring-loaded independently of each other | |
| **MECHANICAL DATA • INNER CONTACT** | |
| Center | 6.50 mm / 256 mil |
| Temperature Range | -30 °C - +120 °C |
| Full Travel | 3.50 mm |
| Working Travel | 3.00 mm |
| Pre-Loaded Spring Force | 0.80 N |
| Spring Force at Working Travel | 1.50 N |
| **MECHANICAL DATA • RING CONTACT** | |
| Center | 6.50 mm / 256 mil |
| Full Travel | 2.50 mm |
| Working Travel | 2.00 mm |
| Pre-Loaded Spring Force | 3.00 N |
| Spring Force at Working Travel | 5.00 N |
| **TOTAL SPRING FORCE** | |
| Full Spring Force at Working Travel | 6.50 N |
| **ELECTRICAL DATA • INNER CONTACT** | |
| Max. Current Rating | 1.0 A |
| Typical Continuity Resistance | ≤ 10 mOhm |
| Typical Insulating Voltage | 800 V |
| **ELECTRICAL DATA • RING CONTACT** | |
| Max. Current Rating | 6.0 A |
| Typical Continuity Resistance | ≤ 10 mOhm |
| Typical Insulating Voltage | 800 V |
| **MATERIALS** | |
| Barrel | CuBe, gold-plated |
| Spring | Spring Steel, silver-plated |
| Plunger Inner Contact | Steel, gold-plated |
| Plunger  Ring Contact | CuBe, gold-plated |
| Receptacle | Brass, gold-plated |
| Connection Element | Brass, tin-plated |
| **RECOMMENDED DIAMETER OF DRILL** | |
| HP 2361.1 (Trolitax) | 4.69 mm |
| HGW 2372 (Glass filled material) | 4.70 mm |

**TIP STYLE · DIAMETER · PLATING**



| D | T |
|---|---|
| 1.00x1.50C Au | 1.00x0.50C Au |

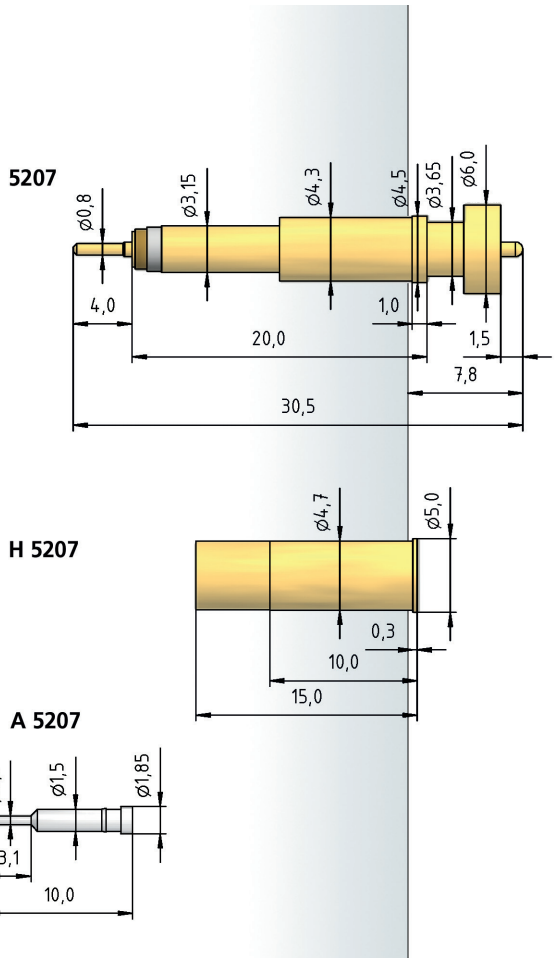


## HOW TO ORDER

| 5207 | - | D | - | 6.5 N | - | Au | 1.0x | 1.5/ | 6.0 | C |
|---|---|---|---|---|---|---|---|---|---|---|
| 1 | | 2 | | 3 | | 4 | 5 | 6 | 7 | 8 |

1 Series 2 Tip Style 3 Total Spring Force (Spring Force Ring Contact + Inner Contact) 4 Tip Plating 5 Inner Tip Diameter 6 Tip Height 7 Ring Contact Diameter 8 Ring Contact Material (only for CuBe)

L'IMPULSION
Retrouvez nous sur
www.limpulsion.fr

Coaxial Test Probe 256 mil / 6.5 mm

# Series 5207/G

## TIP STYLE · DIAMETER · PLATING



| D | T |
|---|---|
| 1.00x1.50C Au | 1.00x0.50C Au |

| BENEFIT | |
|---|---|
| Four-pole measurement | |
| Compact design | |
| Screwable type | |
| Inner and outer conductor are spring-loaded independently of each other | |
| **MECHANICAL DATA • INNER CONTACT** | |
| Center | 6.50 mm / 256 mil |
| Temperature Range | -30 °C - +120 °C |
| Full Travel | 3.50 mm |
| Working Travel | 3.00 mm |
| Pre-Loaded Spring Force | 0.80 N |
| Spring Force at Working Travel | 1.50 N |
| **MECHANICAL DATA • RING CONTACT** | |
| Center | 6.50 mm / 256 mil |
| Full Travel | 2.50 mm |
| Working Travel | 2.00 mm |
| Pre-Loaded Spring Force | 3.00 N |
| Spring Force at Working Travel | 5.00 N |
| **TOTAL SPRING FORCE** | |
| Full Spring Force at Working Travel | 6.50 N |
| **ELECTRICAL DATA • INNER CONTACT** | |
| Max. Current Rating | 6.0 A |
| Typical Continuity Resistance | ≤ 10 mOhm |
| Typical Insulating Voltage | 800 V |
| **ELECTRICAL DATA • RING CONTACT** | |
| Max. Current Rating | 6.0 A |
| Typical Continuity Resistance | ≤ 10 mOhm |
| Typical Insulating Voltage | 800 V |
| **MATERIALS** | |
| Barrel | CuBe, gold-plated |
| Spring | Spring Steel, silver-plated |
| Plunger Inner Contact | Steel, gold-plated |
| Plunger Ring Contact | CuBe, gold-plated |
| Receptacle | Brass, gold-plated |
| Connection Element | Brass, tin-plated |
| **RECOMMENDED DIAMETER OF DRILL** | |
| HP 2361.1 (Trolitax) | 5.49 mm |
| HGW 2372 (Glass filled material) | 5.50 mm |
| **AVAILABLE SCREW TOOLS** | |
| **Article Designation** | **max. Tip-∅** |
| Hexagon Socket Key 2 mm | all |

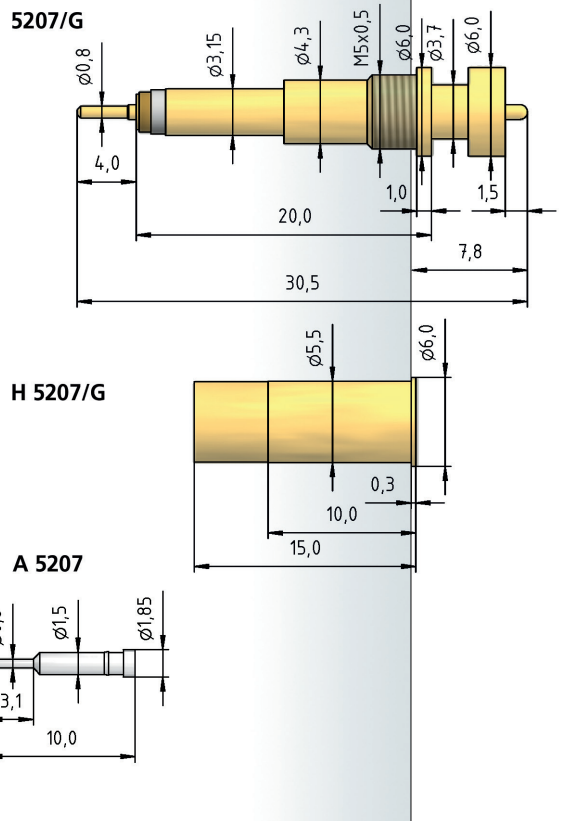


## HOW TO ORDER

| 5207/ | G | - | D | - | 6.5 N | - | Au | 1.0x | 1.5/ | 6.0 | C |
|---|---|---|---|---|---|---|---|---|---|---|---|
| 1 | 2 | | 3 | | 4 | | 5 | 6 | 7 | 8 | 9 |

1 Series 2 Threaded Design 3 Tip Style 4 Total Spring Force (Spring Force Ring Contact + Inner Contact) 5 Tip Plating 6 Inner Tip Diameter 7 Tip Height 8 Ring Contact Diameter 9 Ring Contact Material (only for CuBe)



L'IMPULSION Retrouvez nous sur www.limpulsion.fr

# HIGH-FREQUENCY TEST PROBES

**High-Frequency Test Probes (HF-TP) consist of sprung inner and outer conductors that are arranged coaxially to one another.**

This arrangement is optimal for the transmission of high-frequency signals because the electromagnetic field that is required to transport the energy is restricted to the area between the inner and outer conductors. The advantage is that electro-magnetic emissions and parasitic induction are effectively suppressed. Specially matched geometric relationships and high precision in manufacture allow the transmission of high-frequency signals with low emissions and losses. For that reason the High-Frequency Test Probes of the 7840 / 7860 series are matched to suit high-frequency systems with an impedance of 50 Ohms. In the same way the geometry and dimensions of the probe heads of the inner and outer conductors are also designed to suit the relevant test piece.

High-Frequency Test Probes are compact, space-saving and solid. As a result they are ideally suited for economically carrying out sensitive measuring tasks involving high-frequencies. Furthermore, their modular construction allows the inner and outer conductors to be changed.

High-Frequency Test Probes are available both in plug-in and screw-type form for use when subjected to disturbing forces that act axially (vibration, impacts and the like). For both types there are matching receptacles that allow fast and secure installation and can be changed easily.

High-Frequency Test Probes have a practical connecting bush for connection to a test system, permitting quick contact creation through standardised MCX miniature plugs, and without soldering or other complicated procedures. These MCX plugs are available ready assembled with a flexible high-frequency cable of the Multiflex type, at the end of which an SMA cable plug, for example, is connected.

L'IMPULSION
Retrouvez nous sur
www.limpulsion.fr

| SERIES | PAGE |
|---|---|
| 7890 - Z1 - MINI FAKRA Plug | 208 |
| 7890 - Z2 - MINI FAKRA Socket | 209 |
| 7840 · 7840/G - PCB Contact | 210 |
| 7860 · 7860/G - Z1 - MM8130 · MM8430 · MS156 | 211 |
| 7860 · 7860/G - Z2 - MM8130 · MM8430 · MS156 | 212 |
| 7860 · 7860/G - Z3 - U.FL-m | 213 |
| 7860 · 7860/G - Z4 - R-SMA-m | 214 |
| 7860 · 7860/G - Z5 - MCX-f | 215 |
| 7860 · 7860/G - Z6 - SMA-f | 216 |
| 7860 · 7860/G - Z7 - SMB-m | 217 |
| 7860 · 7860/G - Z8 - SMB-f | 218 |
| 7860 · 7860/G - Z9 - SMC-m | 219 |
| 7860 · 7860/G - Z25 - FAKRA Plug | 220 |
| 7860 · 7860/G - Z20 - FAKRA Socket | 221 |






L'IMPULSION Retrouvez nous sur www.limpulsion.fr

NEW

# Series 7890

High Frequency Test Probe - Impedance 50 Ohm - up to 9 GHz

| BENEFIT | |
|---|---|
| For high frequency measurements | |
| Compact design | |
| Inner conductor and outer tip are independently of each other and interchangeable | |
| **MECHANICAL DATA • INNER CONDUCTOR** | |
| Full Travel | 3.70 mm |
| Working Travel | 2.00 mm |
| Pre-Loaded Spring Force | 0.65/ 0.95 N |
| Spring Force at Working Travel | 1.30/ 2.00 N |
| **MECHANICAL DATA • OUTER CONDUCTOR** | |
| Full Travel | 5.00 mm |
| Working Travel | 4.00 mm |
| Pre-Loaded Spring Force | 1.50 N |
| Spring Force at Working Travel | 4.00 N |
| **TOTAL SPRING FORCE** | |
| Full Spring Force at Working Travel | 5.30/ 6.00 N |
| **ELECTRICAL DATA • INNER CONDUCTOR** | |
| Impedance | 50 Ohm |
| Frequency Range | up to 9 GHz |
| **MATERIALS** | |
| Barrel | Brass, gold-plated |
| Spring | Steel, gold-plated |
| Plunger | CuBe, gold-plated |
| **CABLE DATA** | |
| Type | Multiflex 86 |
| Length | 750 mm |
| Connector Test Probe | MMPX |
| Connector Testing Technology | SMA |

**MINI FAKRA PLUG**

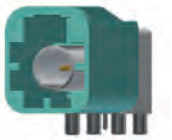

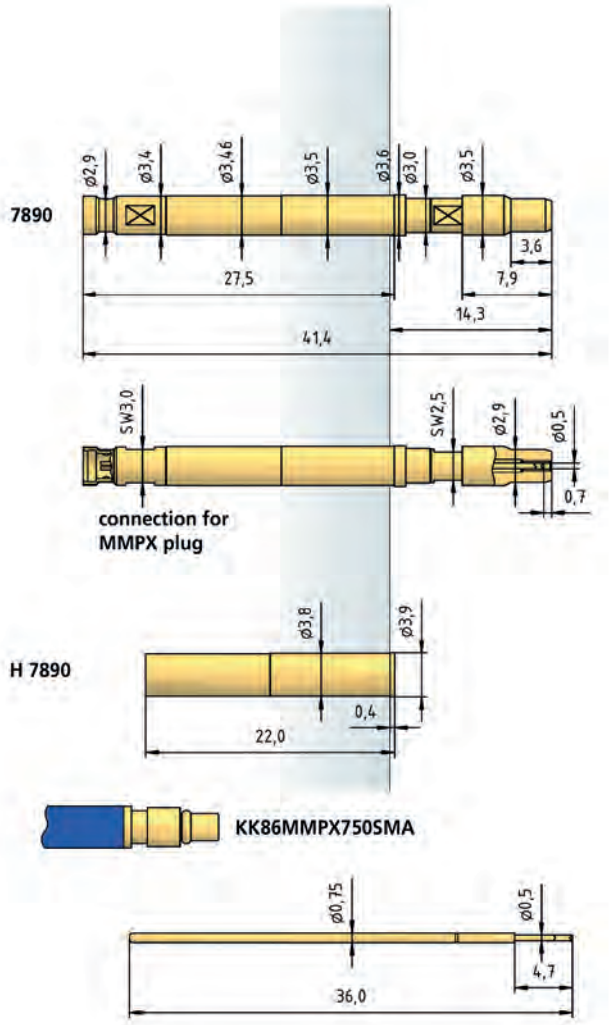


## HOW TO ORDER • COMPLETE TEST PROBE

| 7890 | - | Z1 | A | - | 5.3 N | - | Au | - | 2.9/ | 0.5 | C |
|---|---|---|---|---|---|---|---|---|---|---|---|
| 1 | | 2 | 3 | | 4 | | 5 | | 6 | 7 | 8 |

1 Series 2 Outer Conductor Tip 3 Inner Conductor Tip 4 Total Spring Force
5 Tip Plating 6 Outer Tip Diameter 7 Inner Tip Diameter
8 Tip Material (only for CuBe)

## HOW TO ORDER • INNER CONDUCTOR

| 7860 | - | A | - | 1.3 N | - | Au | - | 0.5 | C |
|---|---|---|---|---|---|---|---|---|---|
| 1 | | 2 | | 3 | | 4 | | 5 | 6 |

1 Series 2 Inner Conductor Tip 3 Spring Force 4 Tip Plating 5 Tip Diameter
6 Tip Material (only for CuBe)

L'IMPULSION
Retrouvez nous sur
www.limpulsion.fr

# High Frequency Test Probe - Impedance 50 Ohm - up to 9 GHz

## Series 7890 NEW

### MINI FAKRA SOCKET



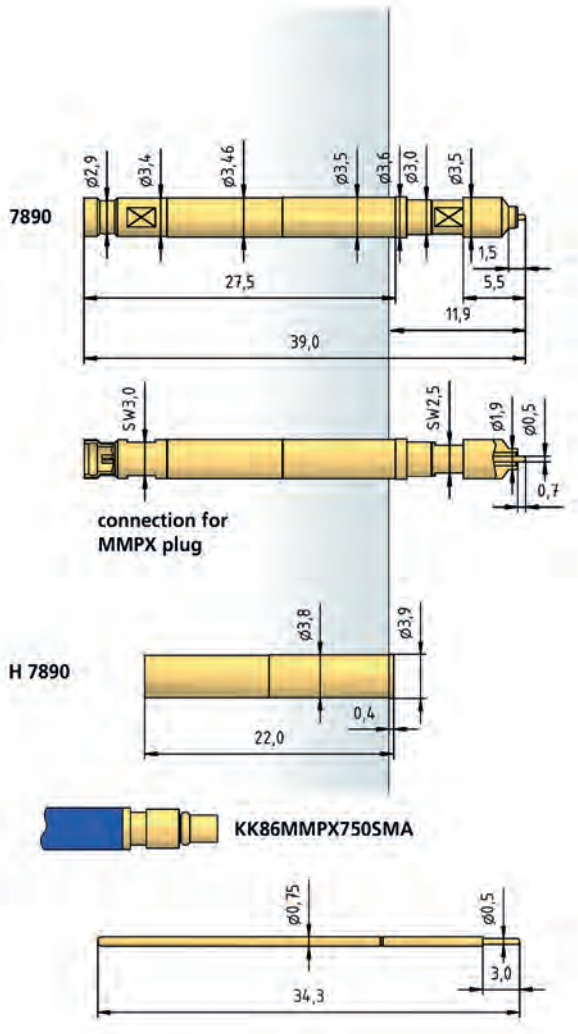


| BENEFIT | |
|---|---|
| For high frequency measurements | |
| Compact design | |
| Inner conductor and outer tip are independently of each other and interchangeable | |
| **MECHANICAL DATA • INNER CONDUCTOR** | |
| Full Travel | 2.00 mm |
| Working Travel | 0.30 mm |
| Pre-Loaded Spring Force | 1.20/ 1.80 N |
| Spring Force at Working Travel | 1.30/ 2.00 N |
| **MECHANICAL DATA • OUTER CONDUCTOR** | |
| Full Travel | 5.00 mm |
| Working Travel | 4.00 mm |
| Pre-Loaded Spring Force | 1.50 N |
| Spring Force at Working Travel | 4.00 N |
| **TOTAL SPRING FORCE** | |
| Full Spring Force at Working Travel | 5.30/ 6.00 N |
| **ELECTRICAL DATA • INNER CONDUCTOR** | |
| Impedance | 50 Ohm |
| Frequency Range | up to 9 GHz |
| **MATERIALS** | |
| Barrel | Brass, gold-plated |
| Spring | Steel, gold-plated |
| Plunger | CuBe, gold-plated |
| **CABLE DATA** | |
| Type | Multiflex 86 |
| Length | 750 mm |
| Connector Test Probe | MMPX |
| Connector Testing Technology | SMA |

### HOW TO ORDER • INNER CONDUCTOR

| 7860 | - | D | - | 1.3 N | - | Au | - | 0.5 | C |
|---|---|---|---|---|---|---|---|---|---|
| 1 | | 2 | | 3 | | 4 | | 5 | 6 |

1 Series 2 Inner Conductor Tip 3 Spring Force 4 Tip Plating 5 Tip Diameter
6 Tip Material (only for CuBe)

### HOW TO ORDER • COMPLETE TEST PROBE

| 7890 | - | Z2 | D | - | 5.3 N | - | Au | - | 1.9/ | 0.5 | C |
|---|---|---|---|---|---|---|---|---|---|---|---|
| 1 | | 2 | 3 | | 4 | | 5 | | 6 | 7 | 8 |

1 Series 2 Outer Conductor Tip 3Inner Conductor Tip 4 Total Spring Force
5 Tip Plating 6 Outer Tip Diameter 7 Inner Tip Diameter
8 Tip Material (only for CuBe)



L'IMPULSION Retrouvez nous sur www.limpulsion.fr

# Series 7840 • 7840/G

High Frequency Test Probe - Impedance 50 Ohm - up to 4 GHz

| BENEFIT | |
|---|---|
| For high frequency measurements | |
| Compact design | |
| Also screwable type | |
| Inner and outer conductor are interchangeable of each other | |
| Inner conductor rigid / outer conductor independent | |
| **MECHANICAL DATA • SPRING-LOADED PROBE TIP** | |
| Full Travel | 1.50 mm |
| Working Travel | 1.00 mm |
| Pre-Loaded Spring Force | 2x0.40 N |
| Spring Force at Working Travel | 2x0.80 N |
| **MECHANICAL DATA • OUTER CONDUCTOR** | |
| Full Travel | 5.00 mm |
| Working Travel | 4.00 mm |
| Pre-Loaded Spring Force | 1.50/ 3.00/ 4.00 N |
| Spring Force at Working Travel | 4.00/ 6.00/ 8.00 N |
| **TOTAL SPRING FORCE** | |
| Full Spring Force at Working Travel | 5.60/ 7.60/ 9.60 N |
| **ELECTRICAL DATA** | |
| Impedance | 50 Ohm |
| Frequency Range | up to 4 GHz |
| **MATERIALS** | |
| Barrel | Brass, gold-plated |
| Spring | Steel, gold-plated |
| Plunger | CuBe, gold-plated |
| Probe Tips | Steel, gold-plated |
| **AVAILABLE SCREW TOOLS** | |
| **Article Designation** | **max. Tip-∅** |
| WFSB 7840/G-8.0 | 8.0 |
| **CABLE DATA** | |
| Type | Multiflex 86 |
| Length | 750 mm |
| Connector Test Probe | MCX |
| Connector Testing Technology | SMA |

**PCB-CONTACT**



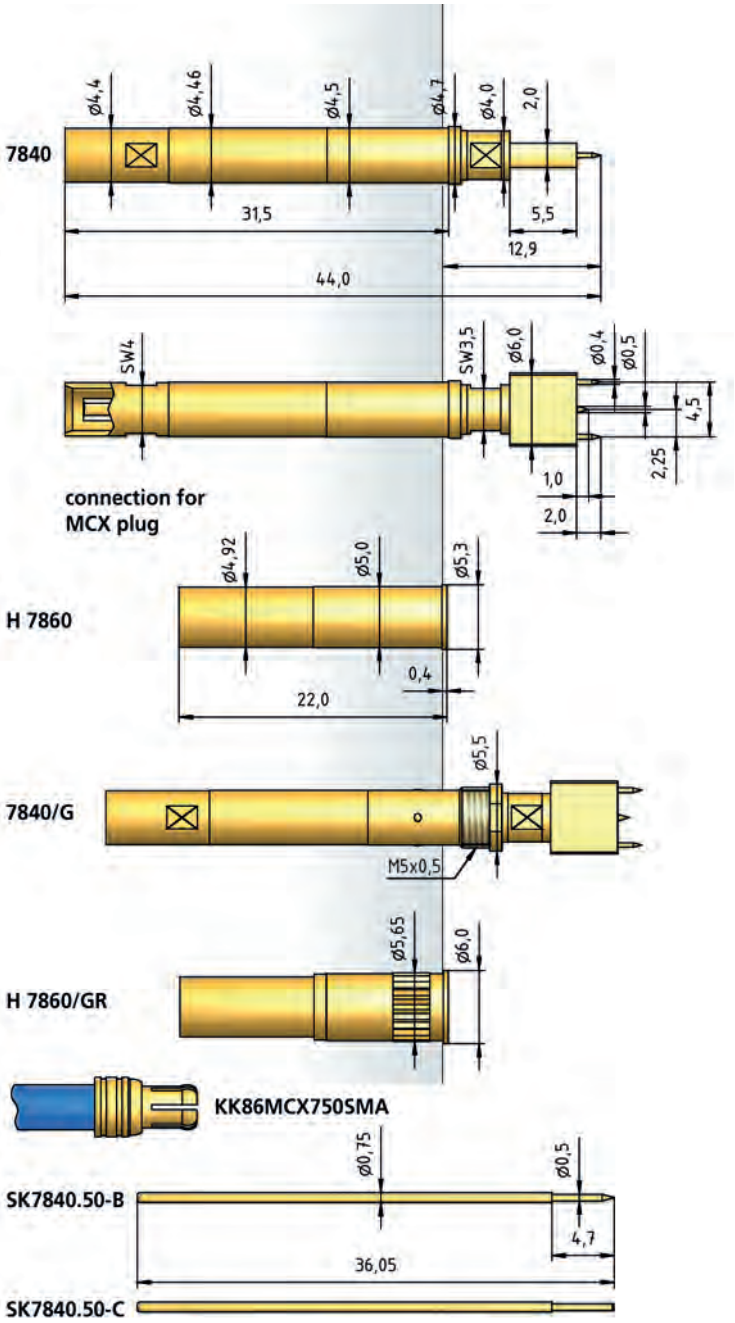


## HOW TO ORDER • COMPLETE TEST PROBE

| 7840/ | G | - | Z51 | B | - | 5.6 N | - | Au | - | 6.0 | C | /0.5 |
|---|---|---|---|---|---|---|---|---|---|---|---|---|
| 1 | 2 | | 3 | 4 | | 5 | | 6 | | 7 | 8 | 9 |

1 Series 2 Variant treaded Design 3 Outer Conductor Tip 4 Inner Conductor Tip 5 Total Spring Force 6 Tip Plating 7 Outer Tip Diameter 8 Tip Material (only for CuBe) 9 Inner Tip Diameter

## HOW TO ORDER • INNER CONDUCTOR

| SK 7840.50 | - | B | - | Au | - | 0.5 |
|---|---|---|---|---|---|---|
| 1 | | 2 | | 3 | | 4 |

1 Series 2 Inner Conductor Tip 3 Tip Plating 4 Tip Diameter

L'IMPULSION Retrouvez nous sur www.limpulsion.fr

High Frequency Test Probe - Impedance 50 Ohm - up to 6 GHz

# Series 7860 • 7860/G

**MM8130 • MM8430 • MS156**



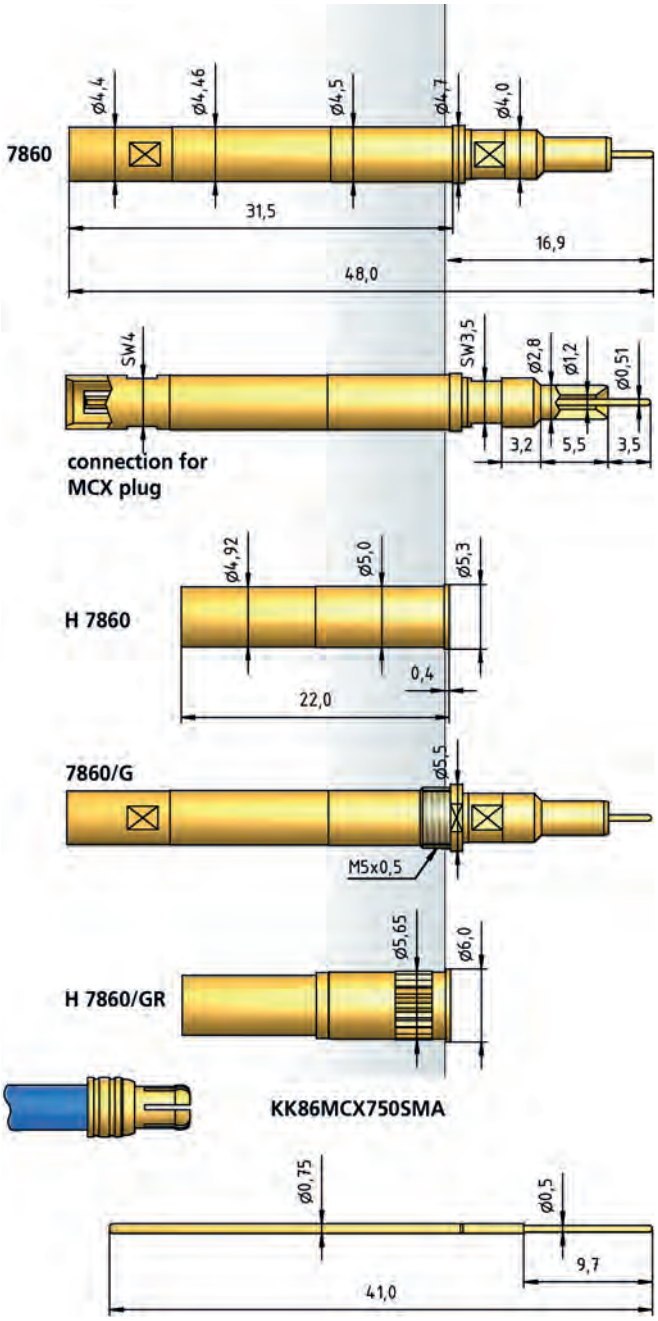


| BENEFIT | |
|---|---|
| For high frequency measurements | |
| Compact design | |
| Also screwable type | |
| Inner conductor and outer tip are independently of each other and interchangeable | |
| **MECHANICAL DATA • INNER CONDUCTOR** | |
| Full Travel | 3.70 mm |
| Working Travel | 2.00 mm |
| Pre-Loaded Spring Force | 0.65/ 0.95 N |
| Spring Force at Working Travel | 1.30/ 2.00 N |
| **MECHANICAL DATA • OUTER CONDUCTOR** | |
| Full Travel | 5.00 mm |
| Working Travel | 4.00 mm |
| Pre-Loaded Spring Force | 1.50/ 3.00/ 4.00 N |
| Spring Force at Working Travel | 4.00/ 6.00/ 8.00 N |
| **TOTAL SPRING FORCE** | |
| Full Spring Force at Working Travel | 5.30/ 6.00/ 7.30/ 8.00/ 9.30/ 10.00 N |
| **ELECTRICAL DATA** | |
| Impedance | 50 Ohm |
| Frequency Range | up to 6 GHz |
| **MATERIALS** | |
| Barrel | Brass, gold-plated |
| Spring | Steel, gold-plated |
| Plunger | CuBe, gold-plated |
| **AVAILABLE SCREW TOOLS** | |
| **Article Designation** | **max. Tip-∅** |
| WFSB 7860/G-8.0 | 8.0 |
| **CABLE DATA** | |
| Type | Multiflex 86 |
| Length | 750 mm |
| Connector Test Probe | MCX |
| Connector Testing Technology | SMA |

## HOW TO ORDER • INNER CONDUCTOR

| 7860 | - | DL | - | 1.3 N | - | Au | - | 0.5 | C |
|---|---|---|---|---|---|---|---|---|---|
| 1 | | 2 | | 3 | | 4 | | 5 | 6 |

1 Series 2 Inner Conductor Tip 3 Spring Force 4 Tip Plating 5 Tip Diameter 6 Tip Material (only for CuBe)

## HOW TO ORDER • COMPLETE TEST PROBE

| 7860/ | G | - | Z1 | DL | - | 5.3 N | - | Au | - | 2.8/ | 0.5 | C |
|---|---|---|---|---|---|---|---|---|---|---|---|---|
| 1 | 2 | | 3 | 4 | | 5 | | 6 | | 7 | 8 | 9 |

1 Series 2 Variant treaded Design 3 Outer Conductor Tip 4 Inner Conductor Tip 5 Total Spring Force 6 Tip Plating 7 Outer Tip Diameter 8 Inner Tip Diameter 9 Tip Material (only for CuBe)



L'IMPULSION
Retrouvez nous sur
www.limpulsion.fr

# Series 7860 • 7860/G

High Frequency Test Probe - Impedance 50 Ohm - up to 6 GHz

| BENEFIT | |
|---|---|
| For high frequency measurements | |
| Compact design | |
| Also screwable type | |
| Inner conductor and outer tip are independently of each other and interchangeable | |
| **MECHANICAL DATA • INNER CONDUCTOR** | |
| Full Travel | 3.70 mm |
| Working Travel | 2.00 mm |
| Pre-Loaded Spring Force | 0.65/ 0.95 N |
| Spring Force at Working Travel | 1.30/ 2.00 N |
| **MECHANICAL DATA • OUTER CONDUCTOR** | |
| Full Travel | 5.00 mm |
| Working Travel | 4.00 mm |
| Pre-Loaded Spring Force | 1.50/ 3.00/ 4.00 N |
| Spring Force at Working Travel | 4.00/ 6.00/ 8.00 N |
| **TOTAL SPRING FORCE** | |
| Full Spring Force at Working Travel | 5.30/ 6.00/ 7.30/ 8.00/ 9.30/ 10.00 N |
| **ELECTRICAL DATA • INNER CONDUCTOR** | |
| Impedance | 50 Ohm |
| Frequency Range | up to 6 GHz |
| **MATERIALS** | |
| Barrel | Brass, gold-plated |
| Spring | Steel, gold-plated |
| Plunger | CuBe, gold-plated |
| **AVAILABLE SCREW TOOLS** | |
| **Article Designation** | **max. Tip-∅** |
| WFSB 7860/G-8.0 | 8.0 |
| **CABLE DATA** | |
| Type | Multiflex 86 |
| Length | 750 mm |
| Connector Test Probe | MCX |
| Connector Testing Technology | SMA |

**MM8130 • MM8430 • MS156**



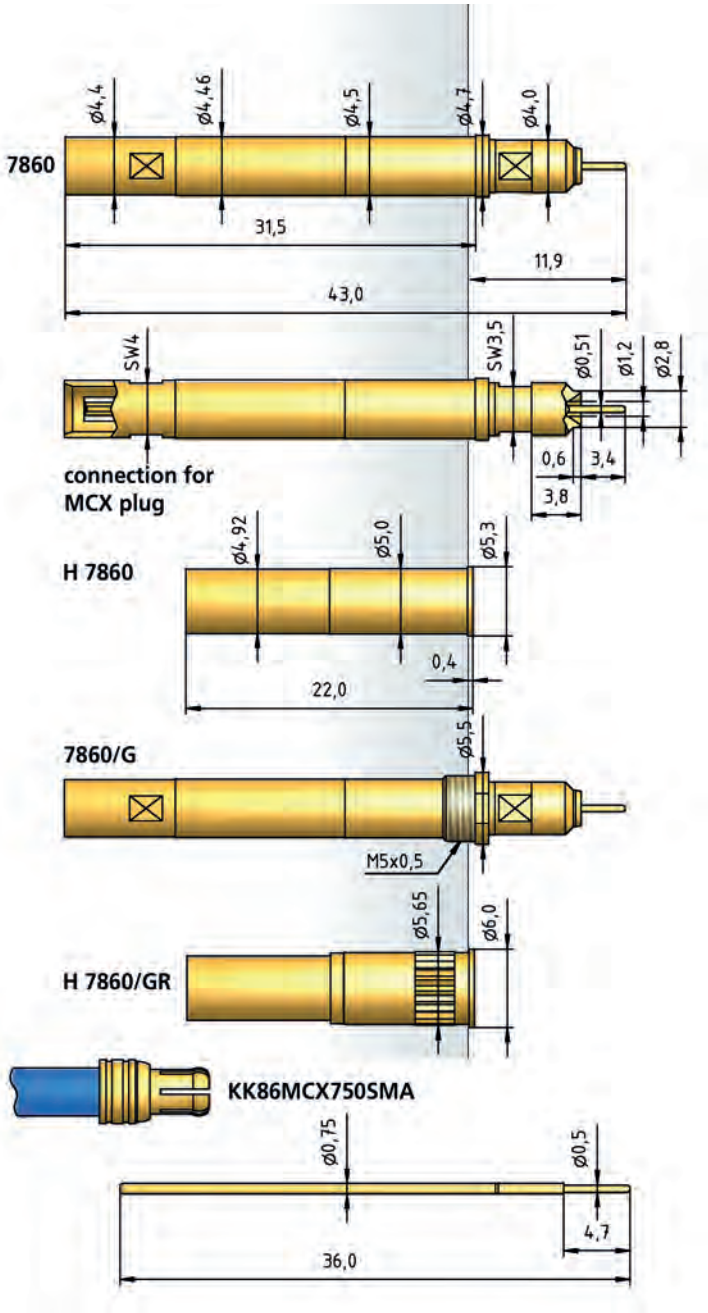


## HOW TO ORDER • COMPLETE TEST PROBE

| 7860/ | G | - | Z2 | D | - | 5.3 N | - | Au | - | 2.8/ | 0.5 | C |
|---|---|---|---|---|---|---|---|---|---|---|---|---|
| 1 | 2 | | 3 | 4 | | 5 | | 6 | | 7 | 8 | 9 |

1 Series 2 Variant treaded Design 3 Outer Conductor Tip 4 Inner Conductor Tip 5 Total Spring Force 6 Tip Plating 7 Outer Tip Diameter 8 Inner Tip Diameter 9 Tip Material (only for CuBe)

## HOW TO ORDER • INNER CONDUCTOR

| 7860 | - | D | - | 1.3 N | - | Au | - | 0.5 | C |
|---|---|---|---|---|---|---|---|---|---|
| 1 | | 2 | | 3 | | 4 | | 5 | 6 |

1 Series 2 Inner Conductor Tip 3 Spring Force 4 Tip Plating 5 Tip Diameter 6 Tip Material (only for CuBe)

L'IMPULSION
Retrouvez nous sur
www.limpulsion.fr

High Frequency Test Probe - Impedance 50 Ohm - up to 6 GHz

# Series 7860 • 7860/G

## U.FL-M



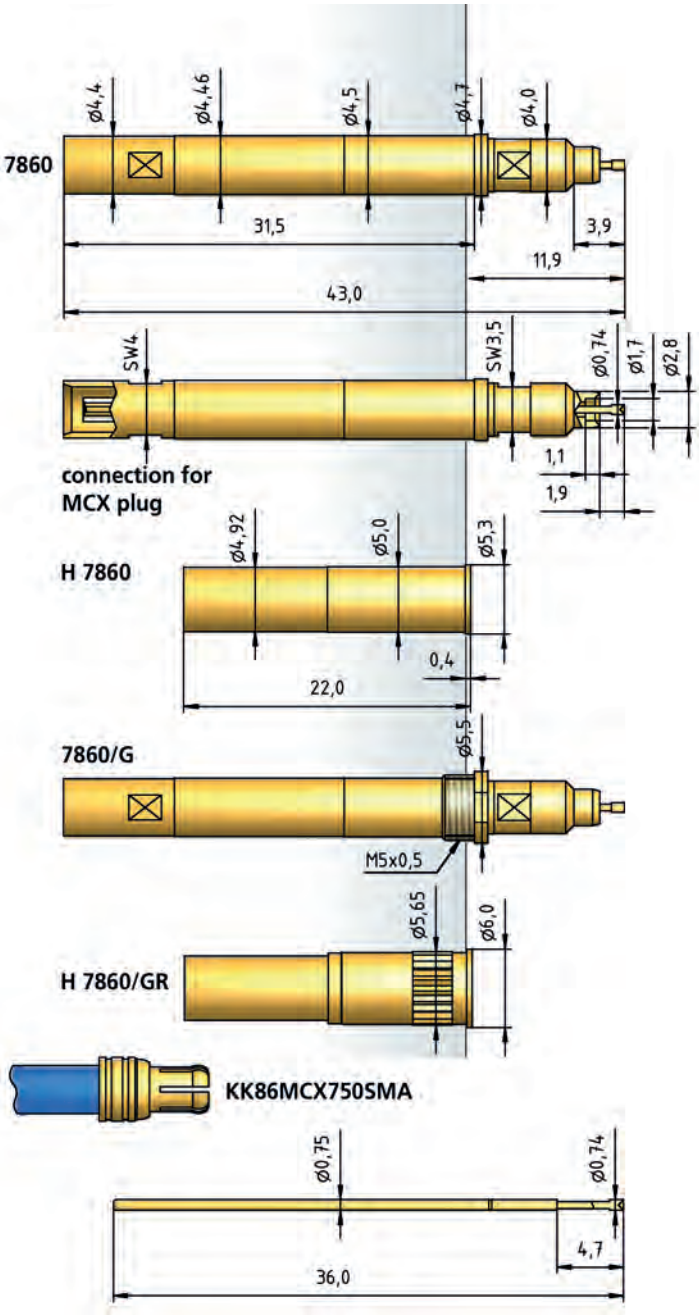


| BENEFIT | |
|---|---|
| For high frequency measurements | |
| Compact design | |
| Also screwable type | |
| Inner conductor and outer tip are independently of each other and interchangeable | |
| **MECHANICAL DATA • INNER CONDUCTOR** | |
| Full Travel | 3.70 mm |
| Working Travel | 2.00 mm |
| Pre-Loaded Spring Force | 0.65/ 0.95 N |
| Spring Force at Working Travel | 1.30/ 2.00 N |
| **MECHANICAL DATA • OUTER CONDUCTOR** | |
| Full Travel | 5.00 mm |
| Working Travel | 4.00 mm |
| Pre-Loaded Spring Force | 1.50/ 3.00/ 4.00 N |
| Spring Force at Working Travel | 4.00/ 6.00/ 8.00 N |
| **TOTAL SPRING FORCE** | |
| Full Spring Force at Working Travel | 5.30/ 6.00/ 7.30/ 8.00/ 9.30/ 10.00 N |
| **ELECTRICAL DATA • INNER CONDUCTOR** | |
| Impedance | 50 Ohm |
| Frequency Range | up to 6 GHz |
| **MATERIALS** | |
| Barrel | Brass, gold-plated |
| Spring | Steel, gold-plated |
| Plunger | CuBe, gold-plated |
| **AVAILABLE SCREW TOOLS** | |
| **Article Designation** | **max. Tip-∅** |
| WFSB 7860/G-8.0 | 8.0 |
| **CABLE DATA** | |
| Type | Multiflex 86 |
| Length | 750 mm |
| Connector Test Probe | MCX |
| Connector Testing Technology | SMA |

## HOW TO ORDER • INNER CONDUCTOR

| 7860 | - | A | - | 1.3 N | - | Au | - | 0.74 | C |
|---|---|---|---|---|---|---|---|---|---|
| 1 | | 2 | | 3 | | 4 | | 5 | 6 |

1 Series 2 Inner Conductor Tip 3 Spring Force 4 Tip Plating 5 Tip Diameter 6 Tip Material (only for CuBe)

## HOW TO ORDER • COMPLETE TEST PROBE

| 7860/ | G | - | Z3 | A | - | 5.3 N | - | Au | - | 2.8/ | 0.74 | C |
|---|---|---|---|---|---|---|---|---|---|---|---|---|
| 1 | 2 | | 3 | 4 | | 5 | | 6 | | 7 | 8 | 9 |

1 Series 2 Variant treaded Design 3 Outer Conductor Tip 4 Inner Conductor Tip 5 Total Spring Force 6 Tip Plating 7 Outer Tip Diameter 8 Inner Tip Diameter 9 Tip Material (only for CuBe)



L'IMPULSION Retrouvez nous sur www.limpulsion.fr

# Series 7860 • 7860/G

High Frequency Test Probe - Impedance 50 Ohm - up to 6 GHz

| BENEFIT | |
|---|---|
| For high frequency measurements | |
| Compact design | |
| Also screwable type | |
| Inner conductor and outer tip are independently of each other and interchangeable | |
| **MECHANICAL DATA • INNER CONDUCTOR** | |
| Full Travel | 3.70 mm |
| Working Travel | 2.00 mm |
| Pre-Loaded Spring Force | 0.65/ 0.95 N |
| Spring Force at Working Travel | 1.30/ 2.00 N |
| **MECHANICAL DATA • OUTER CONDUCTOR** | |
| Full Travel | 5.00 mm |
| Working Travel | 4.00 mm |
| Pre-Loaded Spring Force | 1.50/ 3.00/ 4.00 N |
| Spring Force at Working Travel | 4.00/ 6.00/ 8.00 N |
| **TOTAL SPRING FORCE** | |
| Full Spring Force at Working Travel | 5.30/ 6.00/ 7.30/ 8.00/ 9.30/ 10.00 N |
| **ELECTRICAL DATA • INNER CONDUCTOR** | |
| Impedance | 50 Ohm |
| Frequency Range | up to 6 GHz |
| **MATERIALS** | |
| Barrel | Brass, gold-plated |
| Spring | Steel, gold-plated |
| Plunger | CuBe, gold-plated |
| **AVAILABLE SCREW TOOLS** | |
| **Article Designation** | **max. Tip-∅** |
| WFSB 7860/G-8.0 | 8.0 |
| **CABLE DATA** | |
| Type | Multiflex 86 |
| Length | 750 mm |
| Connector Test Probe | MCX |
| Connector Testing Technology | SMA |

**R-SMA-M**

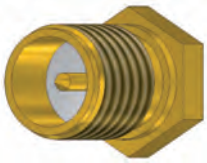

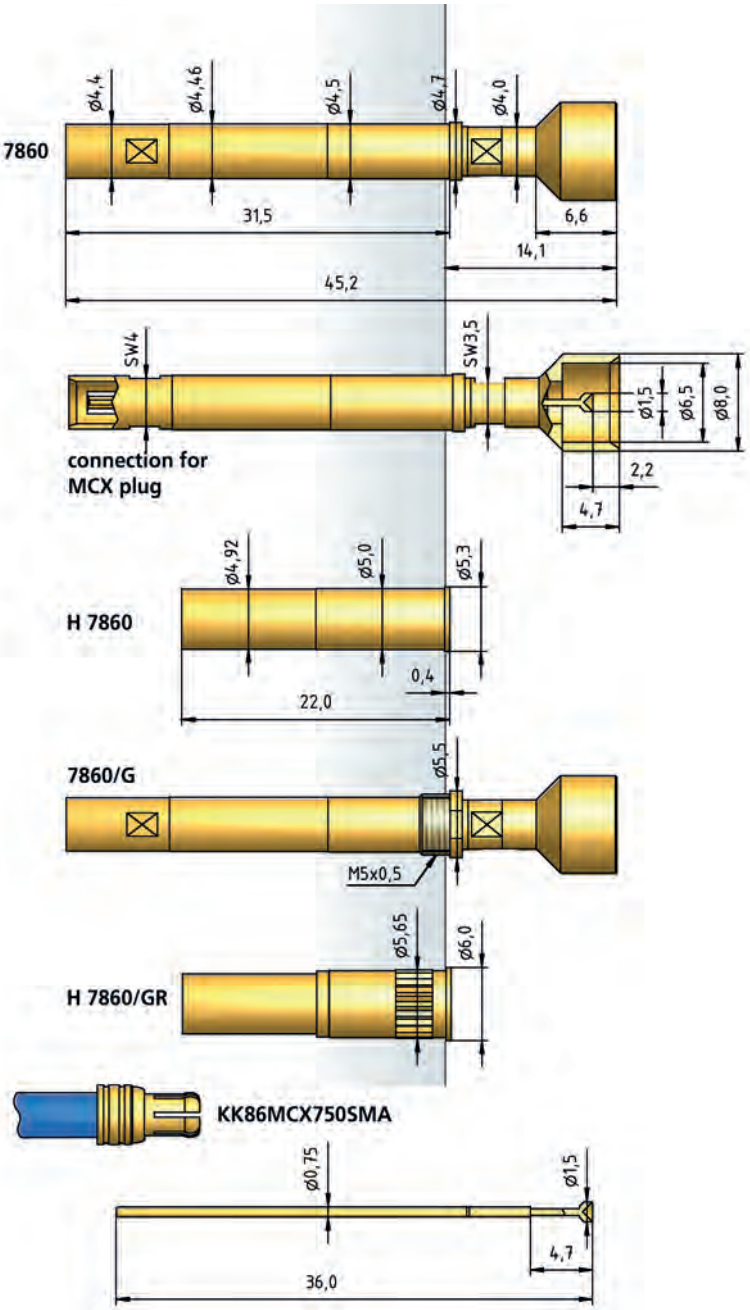


## HOW TO ORDER • COMPLETE TEST PROBE

| 7860/ | G | - | Z4 | A | - | 5.3 N | - | Au | - | 8.0/ | 1.5 | C |
|---|---|---|---|---|---|---|---|---|---|---|---|---|
| 1 | 2 | | 3 | 4 | | 5 | | 6 | | 7 | 8 | 9 |

1 Series 2 Variant treaded Design 3 Outer Conductor Tip 4 Inner Conductor Tip 5 Total Spring Force 6 Tip Plating 7 Outer Tip Diameter 8 Inner Tip Diameter 9 Tip Material (only for CuBe)

## HOW TO ORDER • INNER CONDUCTOR

| 7860 | - | A | - | 1.3 N | - | Au | - | 1.5 | C |
|---|---|---|---|---|---|---|---|---|---|
| 1 | | 2 | | 3 | | 4 | | 5 | 6 |

1 Series 2 Inner Conductor Tip 3 Spring Force 4 Tip Plating 5 Tip Diameter 6 Tip Material (only for CuBe)

L'IMPULSION
Retrouvez nous sur
www.limpulsion.fr

High Frequency Test Probe - Impedance 50 Ohm - up to 6 GHz

# Series 7860 • 7860/G

## MCX-F

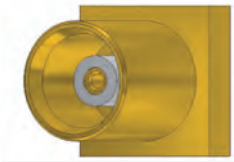

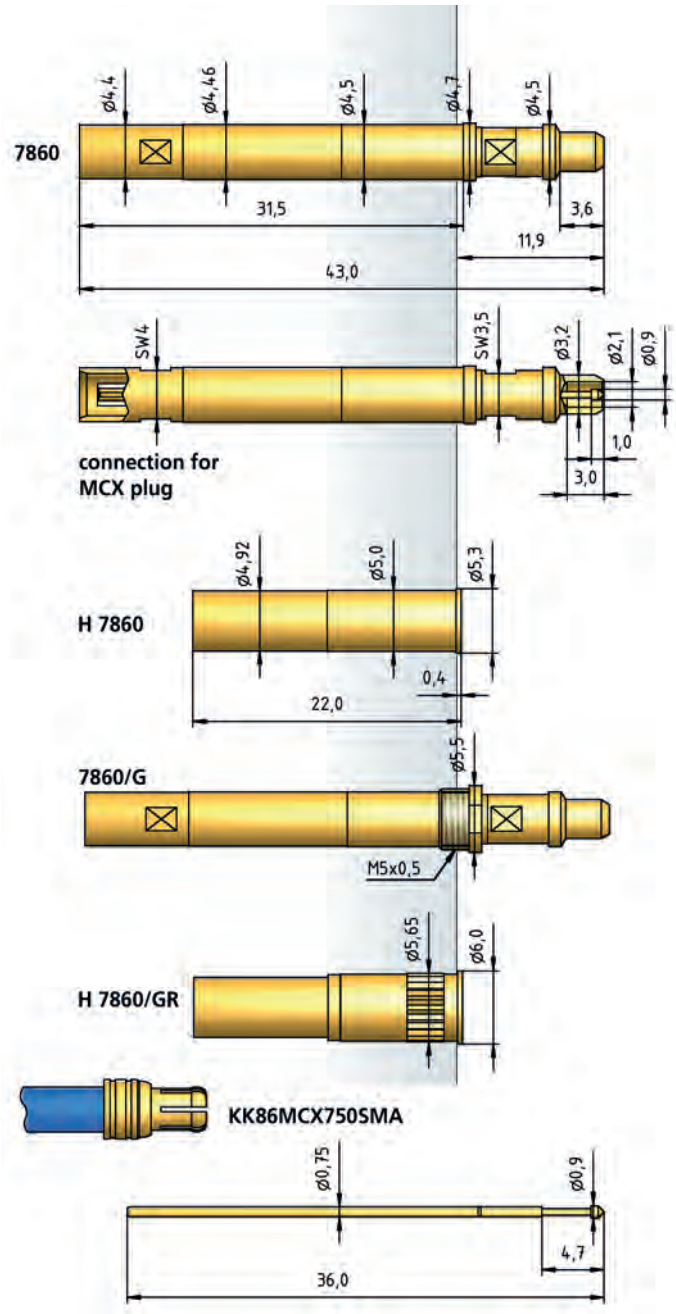


| BENEFIT | |
|---|---|
| For high frequency measurements | |
| Compact design | |
| Also screwable type | |
| Inner conductor and outer tip are independently of each other and interchangeable | |
| **MECHANICAL DATA • INNER CONDUCTOR** | |
| Full Travel | 3.70 mm |
| Working Travel | 2.00 mm |
| Pre-Loaded Spring Force | 0.65/ 0.95 N |
| Spring Force at Working Travel | 1.30/ 2.00 N |
| **MECHANICAL DATA • OUTER CONDUCTOR** | |
| Full Travel | 5.00 mm |
| Working Travel | 4.00 mm |
| Pre-Loaded Spring Force | 1.50/ 3.00/ 4.00 N |
| Spring Force at Working Travel | 4.00/ 6.00/ 8.00 N |
| **TOTAL SPRING FORCE** | |
| Full Spring Force at Working Travel | 5.30/ 6.00/ 7.30/ 8.00/ 9.30/ 10.00 N |
| **ELECTRICAL DATA • INNER CONDUCTOR** | |
| Impedance | 50 Ohm |
| Frequency Range | up to 6 GHz |
| **MATERIALS** | |
| Barrel | Brass, gold-plated |
| Spring | Steel, gold-plated |
| Plunger | CuBe, gold-plated |
| **AVAILABLE SCREW TOOLS** | |
| **Article Designation** | **max. Tip-∅** |
| WFSB 7860/G-8.0 | 8.0 |
| **CABLE DATA** | |
| Type | Multiflex 86 |
| Length | 750 mm |
| Connector Test Probe | MCX |
| Connector Testing Technology | SMA |

## HOW TO ORDER • INNER CONDUCTOR

| 7860 | - | E | - | 1.3 N | - | Au | - | 0.9 | C |
|---|---|---|---|---|---|---|---|---|---|
| 1 | | 2 | | 3 | | 4 | | 5 | 6 |

1 Series 2 Inner Conductor Tip 3 Spring Force 4 Tip Plating 5 Tip Diameter 6 Tip Material (only for CuBe)

## HOW TO ORDER • COMPLETE TEST PROBE

| 7860/ | G | - | Z5 | E | - | 5.3 N | - | Au | - | 3.2/ | 0.9 | C |
|---|---|---|---|---|---|---|---|---|---|---|---|---|
| 1 | 2 | | 3 | 4 | | 5 | | 6 | | 7 | 8 | 9 |

1 Series 2 Variant treaded Design 3 Outer Conductor Tip 4 Inner Conductor Tip 5 Total Spring Force 6 Tip Plating 7 Outer Tip Diameter 8 Inner Tip Diameter 9 Tip Material (only for CuBe)



L'IMPULSION Retrouvez nous sur www.limpulsion.fr

# Series 7860 • 7860/G

High Frequency Test Probe - Impedance 50 Ohm - up to 6 GHz

| BENEFIT | |
|---|---|
| For high frequency measurements | |
| Compact design | |
| Also screwable type | |
| Inner conductor and outer tip are independently of each other and interchangeable | |
| **MECHANICAL DATA • INNER CONDUCTOR** | |
| Full Travel | 3.70 mm |
| Working Travel | 2.00 mm |
| Pre-Loaded Spring Force | 0.65/ 0.95 N |
| Spring Force at Working Travel | 1.30/ 2.00 N |
| **MECHANICAL DATA • OUTER CONDUCTOR** | |
| Full Travel | 5.00 mm |
| Working Travel | 4.00 mm |
| Pre-Loaded Spring Force | 1.50/ 3.00/ 4.00 N |
| Spring Force at Working Travel | 4.00/ 6.00/ 8.00 N |
| **TOTAL SPRING FORCE** | |
| Full Spring Force at Working Travel | 5.30/ 6.00/ 7.30/ 8.00/ 9.30/ 10.00 N |
| **ELECTRICAL DATA • INNER CONDUCTOR** | |
| Impedance | 50 Ohm |
| Frequency Range | up to 6 GHz |
| **MATERIALS** | |
| Barrel | Brass, gold-plated |
| Spring | Steel, gold-plated |
| Plunger | CuBe, gold-plated |
| **AVAILABLE SCREW TOOLS** | |
| **Article Designation** | **max. Tip-∅** |
| WFSB 7860/G-8.0 | 8.0 |
| **CABLE DATA** | |
| Type | Multiflex 86 |
| Length | 750 mm |
| Connector Test Probe | MCX |
| Connector Testing Technology | SMA |

**SMA-F**

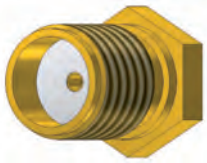

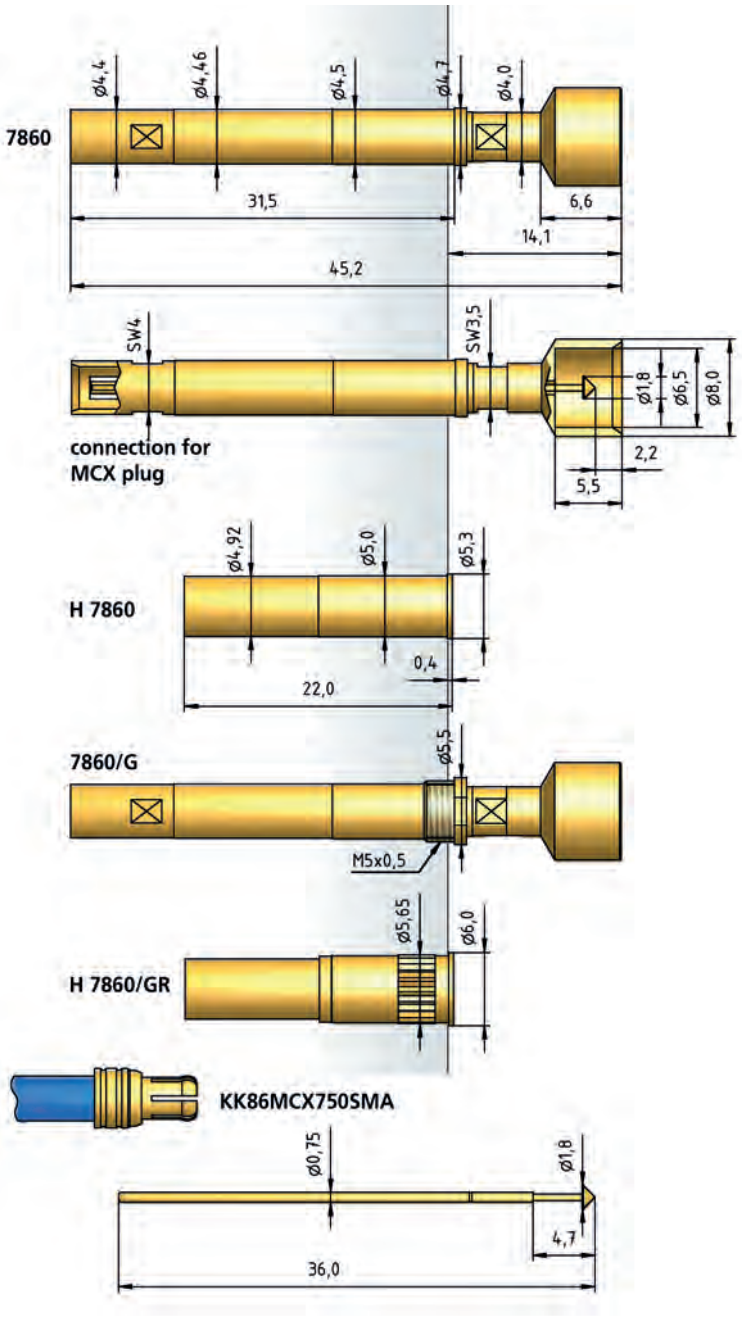


## HOW TO ORDER • COMPLETE TEST PROBE

| 7860/ | G | - | Z6 | E | - | 5.3 N | - | Au | - | 8.0/ | 1.8 | C |
|---|---|---|---|---|---|---|---|---|---|---|---|---|
| 1 | 2 | | 3 | 4 | | 5 | | 6 | | 7 | 8 | 9 |

1 Series 2 Variant treaded Design 3 Outer Conductor Tip 4 Inner Conductor Tip 5 Total Spring Force 6 Tip Plating 7 Outer Tip Diameter 8 Inner Tip Diameter 9 Tip Material (only for CuBe)

## HOW TO ORDER • INNER CONDUCTOR

| 7860 | - | E | - | 1.3 N | - | Au | - | 1.8 | C |
|---|---|---|---|---|---|---|---|---|---|
| 1 | | 2 | | 3 | | 4 | | 5 | 6 |

1 Series 2 Inner Conductor Tip 3 Spring Force 4 Tip Plating 5 Tip Diameter 6 Tip Material (only for CuBe)

L'IMPULSION
Retrouvez nous sur
www.limpulsion.fr

High Frequency Test Probe - Impedance 50 Ohm - up to 6 GHz

# Series 7860 • 7860/G

## SMB-M

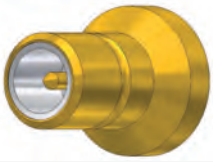

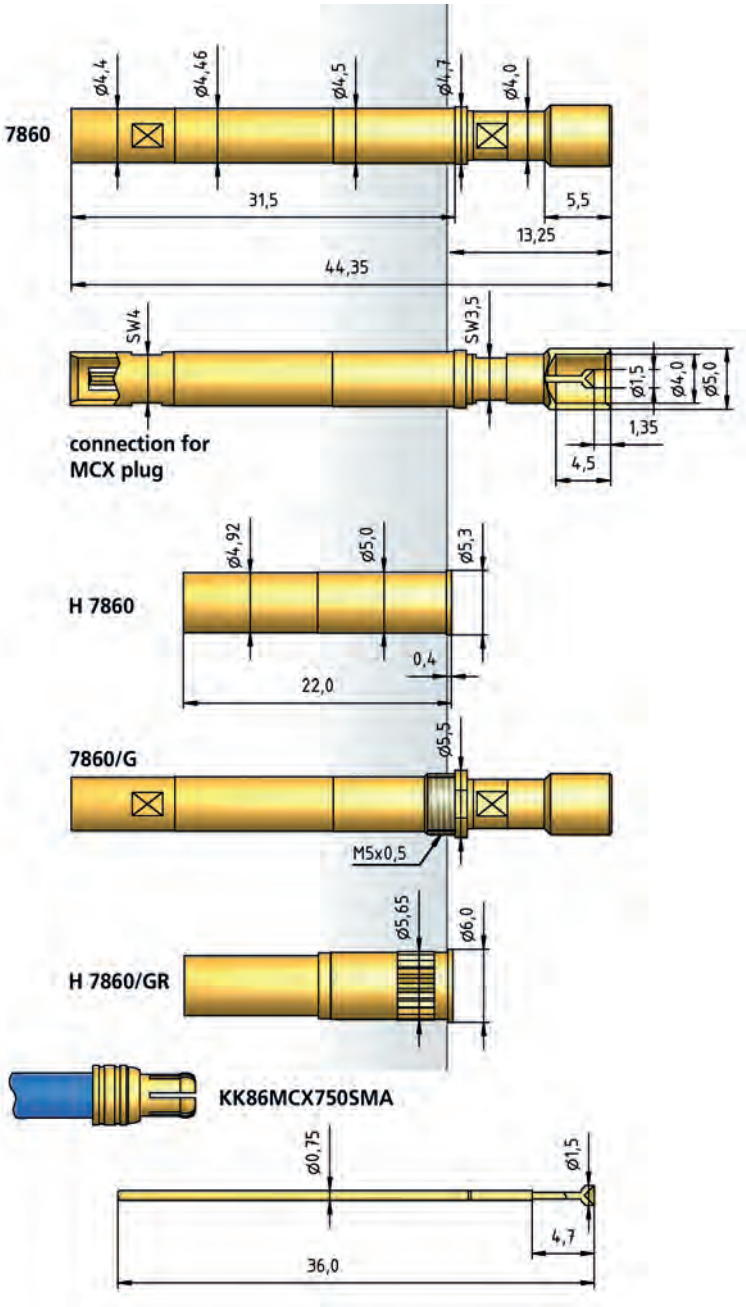


| BENEFIT | |
|---|---|
| For high frequency measurements | |
| Compact design | |
| Also screwable type | |
| Inner conductor and outer tip are independently of each other and interchangeable | |
| **MECHANICAL DATA • INNER CONDUCTOR** | |
| Full Travel | 3.70 mm |
| Working Travel | 2.00 mm |
| Pre-Loaded Spring Force | 0.65/ 0.95 N |
| Spring Force at Working Travel | 1.30/ 2.00 N |
| **MECHANICAL DATA • OUTER CONDUCTOR** | |
| Full Travel | 5.00 mm |
| Working Travel | 4.00 mm |
| Pre-Loaded Spring Force | 1.50/ 3.00/ 4.00 N |
| Spring Force at Working Travel | 4.00/ 6.00/ 8.00 N |
| **TOTAL SPRING FORCE** | |
| Full Spring Force at Working Travel | 5.30/ 6.00/ 7.30/ 8.00/ 9.30/ 10.00 N |
| **ELECTRICAL DATA • INNER CONDUCTOR** | |
| Impedance | 50 Ohm |
| Frequency Range | up to 6 GHz |
| **MATERIALS** | |
| Barrel | Brass, gold-plated |
| Spring | Steel, gold-plated |
| Plunger | CuBe, gold-plated |
| **AVAILABLE SCREW TOOLS** | |
| **Article Designation** | **max. Tip-∅** |
| WFSB 7860/G-8.0 | 8.0 |
| **CABLE DATA** | |
| Type | Multiflex 86 |
| Length | 750 mm |
| Connector Test Probe | MCX |
| Connector Testing Technology | SMA |

## HOW TO ORDER • INNER CONDUCTOR

| 7860 | - | A | - | 1.3 N | - | Au | - | 1.5 | C |
|---|---|---|---|---|---|---|---|---|---|
| 1 | | 2 | | 3 | | 4 | | 5 | 6 |

1 Series 2 Inner Conductor Tip 3 Spring Force 4 Tip Plating 5 Tip Diameter 6 Tip Material (only for CuBe)

## HOW TO ORDER • COMPLETE TEST PROBE

| 7860/ | G | - | Z7 | A | - | 5.3 N | - | Au | - | 5.0/ | 1.5 | C |
|---|---|---|---|---|---|---|---|---|---|---|---|---|
| 1 | 2 | | 3 | 4 | | 5 | | 6 | | 7 | 8 | 9 |

1 Series 2 Variant treaded Design 3 Outer Conductor Tip 4 Inner Conductor Tip 5 Total Spring Force 6 Tip Plating 7 Outer Tip Diameter 8 Inner Tip Diameter 9 Tip Material (only for CuBe)



L'IMPULSION Retrouvez nous sur www.limpulsion.fr

# Series 7860 • 7860/G

High Frequency Test Probe - Impedance 50 Ohm - up to 6 GHz

| BENEFIT | |
|---|---|
| For high frequency measurements | |
| Compact design | |
| Also screwable type | |
| Inner conductor and outer tip are independently of each other and interchangeable | |
| **MECHANICAL DATA • INNER CONDUCTOR** | |
| Full Travel | 3.70 mm |
| Working Travel | 2.00 mm |
| Pre-Loaded Spring Force | 0.65/ 0.95 N |
| Spring Force at Working Travel | 1.30/ 2.00 N |
| **MECHANICAL DATA • OUTER CONDUCTOR** | |
| Full Travel | 5.00 mm |
| Working Travel | 4.00 mm |
| Pre-Loaded Spring Force | 1.50/ 3.00/ 4.00 N |
| Spring Force at Working Travel | 4.00/ 6.00/ 8.00 N |
| **TOTAL SPRING FORCE** | |
| Full Spring Force at Working Travel | 5.30/ 6.00/ 7.30/ 8.00/ 9.30/ 10.00 N |
| **ELECTRICAL DATA • INNER CONDUCTOR** | |
| Impedance | 50 Ohm |
| Frequency Range | up to 6 GHz |
| **MATERIALS** | |
| Barrel | Brass, gold-plated |
| Spring | Steel, gold-plated |
| Plunger | CuBe, gold-plated |
| **AVAILABLE SCREW TOOLS** | |
| **Article Designation** | **max. Tip-∅** |
| WFSB 7860/G-8.0 | 8.0 |
| **CABLE DATA** | |
| Type | Multiflex 86 |
| Length | 750 mm |
| Connector Test Probe | MCX |
| Connector Testing Technology | SMA |

**SMB-F**

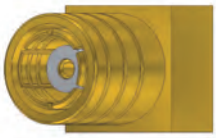

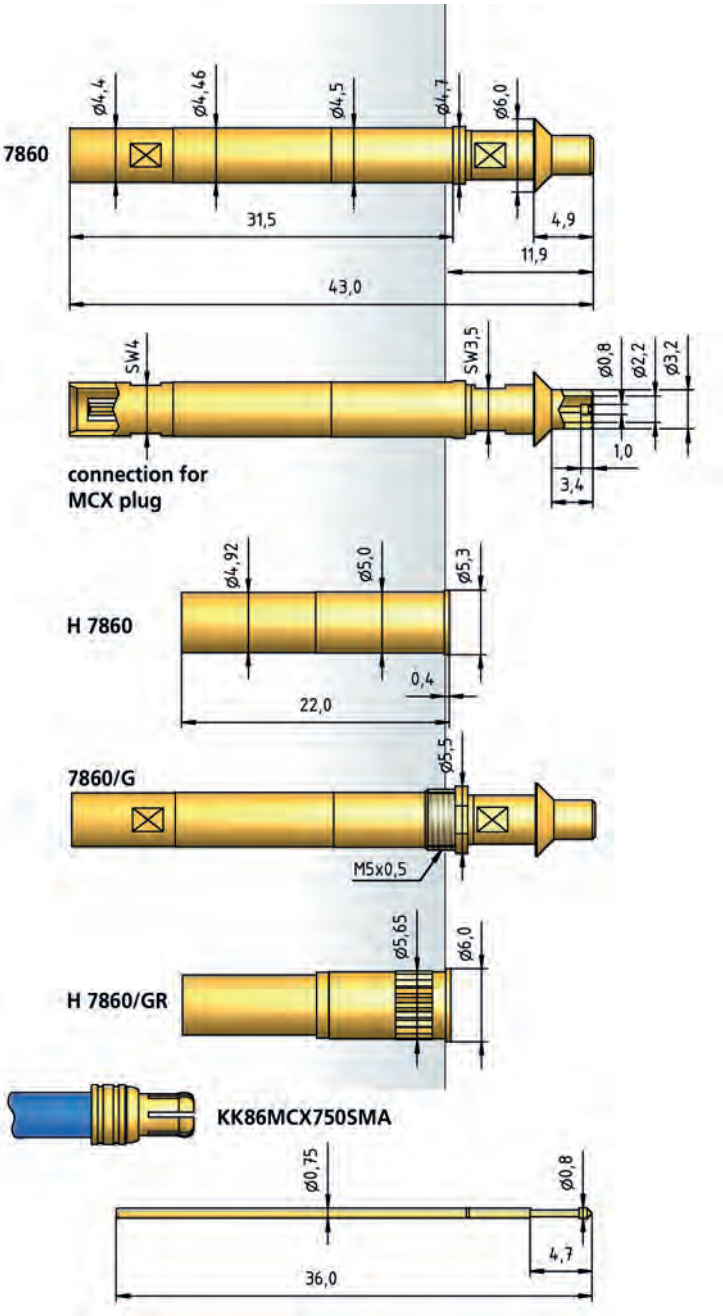


## HOW TO ORDER • COMPLETE TEST PROBE

| 7860/ | G | - | Z8 | E | - | 5.3 N | - | Au | - | 3.20/ | 0.8 | C |
|---|---|---|---|---|---|---|---|---|---|---|---|---|
| 1 | 2 | | 3 | 4 | | 5 | | 6 | | 7 | 8 | 9 |

1 Series 2 Variant treaded Design 3 Outer Conductor Tip 4 Inner Conductor Tip 5 Total Spring Force 6 Tip Plating 7 Outer Tip Diameter 8 Inner Tip Diameter 9 Tip Material (only for CuBe)

## HOW TO ORDER • INNER CONDUCTOR

| 7860 | - | E | - | 1.3 N | - | Au | - | 0.8 | C |
|---|---|---|---|---|---|---|---|---|---|
| 1 | | 2 | | 3 | | 4 | | 5 | 6 |

1 Series 2 Inner Conductor Tip 3 Spring Force 4 Tip Plating 5 Tip Diameter 6 Tip Material (only for CuBe)

L'IMPULSION
Retrouvez nous sur
www.limpulsion.fr

High Frequency Test Probe - Impedance 50 Ohm - up to 6 GHz

# Series 7860 • 7860/G

## SMC-M

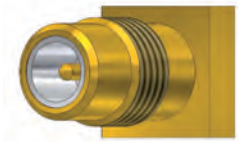

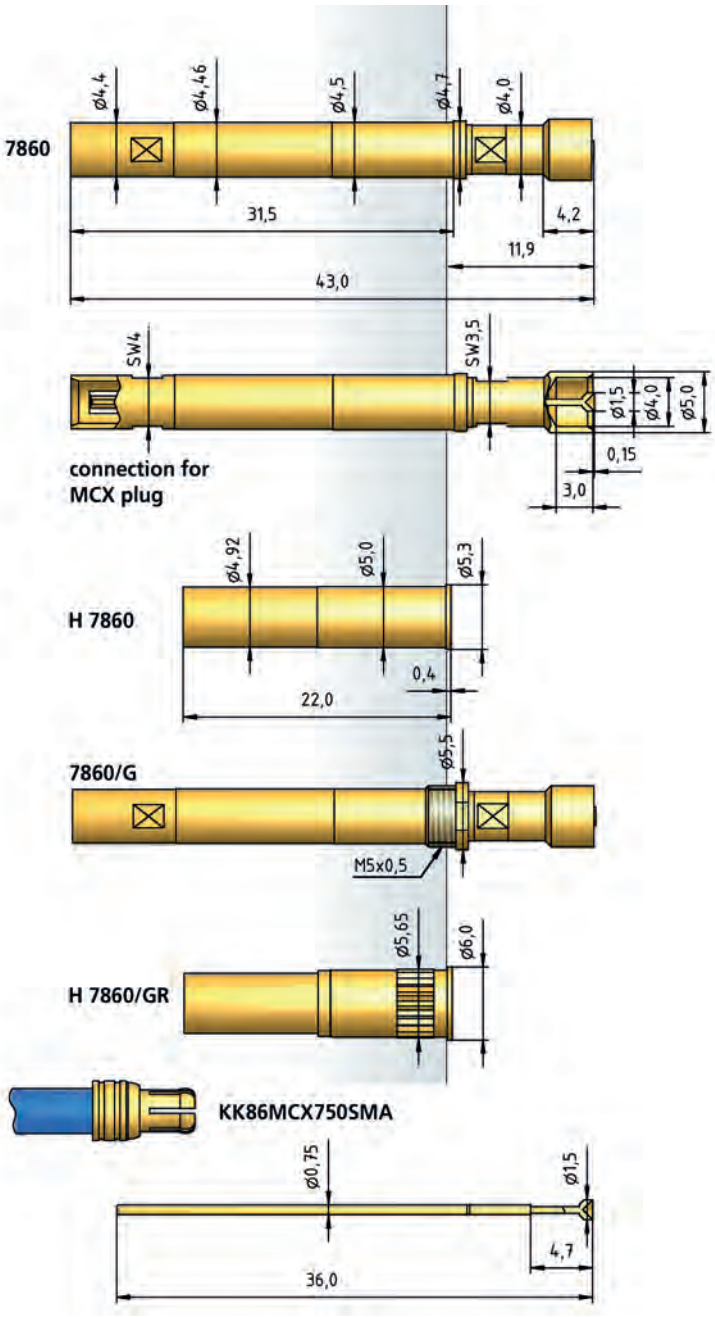


| BENEFIT | |
|---|---|
| For high frequency measurements | |
| Compact design | |
| Also screwable type | |
| Inner conductor and outer tip are independently of each other and interchangeable | |
| **MECHANICAL DATA • INNER CONDUCTOR** | |
| Full Travel | 3.70 mm |
| Working Travel | 2.00 mm |
| Pre-Loaded Spring Force | 0.65/ 0.95 N |
| Spring Force at Working Travel | 1.30/ 2.00 N |
| **MECHANICAL DATA • OUTER CONDUCTOR** | |
| Full Travel | 5.00 mm |
| Working Travel | 4.00 mm |
| Pre-Loaded Spring Force | 1.50/ 3.00/ 4.00 N |
| Spring Force at Working Travel | 4.00/ 6.00/ 8.00 N |
| **TOTAL SPRING FORCE** | |
| Full Spring Force at Working Travel | 5.30/ 6.00/ 7.30/ 8.00/ 9.30/ 10.00 N |
| **ELECTRICAL DATA • INNER CONDUCTOR** | |
| Impedance | 50 Ohm |
| Frequency Range | up to 6 GHz |
| **MATERIALS** | |
| Barrel | Brass, gold-plated |
| Spring | Steel, gold-plated |
| Plunger | CuBe, gold-plated |
| **AVAILABLE SCREW TOOLS** | |
| **Article Designation** | **max. Tip-∅** |
| WFSB 7860/G-8.0 | 8.0 |
| **CABLE DATA** | |
| Type | Multiflex 86 |
| Length | 750 mm |
| Connector Test Probe | MCX |
| Connector Testing Technology | SMA |

## HOW TO ORDER • INNER CONDUCTOR

| 7860 | - | A | - | 1.3 N | - | Au | - | 1.5 | C |
|---|---|---|---|---|---|---|---|---|---|
| 1 | | 2 | | 3 | | 4 | | 5 | 6 |

1 Series 2 Inner Conductor Tip 3 Spring Force 4 Tip Plating 5 Tip Diameter 6 Tip Material (only for CuBe)

## HOW TO ORDER • COMPLETE TEST PROBE

| 7860/ | G | - | Z9 | A | - | 5.3 N | - | Au | - | 5.0/ | 1.5 | C |
|---|---|---|---|---|---|---|---|---|---|---|---|---|
| 1 | 2 | | 3 | 4 | | 5 | | 6 | | 7 | 8 | 9 |

1 Series 2 Variant treaded Design 3 Outer Conductor Tip 4 Inner Conductor Tip 5 Total Spring Force 6 Tip Plating 7 Outer Tip Diameter 8 Inner Tip Diameter 9 Tip Material (only for CuBe)



L'IMPULSION Retrouvez nous sur www.limpulsion.fr

# Series 7860 • 7860/G

High Frequency Test Probe - Impedance 50 Ohm - up to 6 GHz

| BENEFIT | |
|---|---|
| For high frequency measurements | |
| Compact design | |
| Also screwable type | |
| Inner conductor and outer tip are independently of each other and interchangeable | |
| **MECHANICAL DATA • INNER CONDUCTOR** | |
| Full Travel | 3.70 mm |
| Working Travel | 2.00 mm |
| Pre-Loaded Spring Force | 0.65/ 0.95 N |
| Spring Force at Working Travel | 1.30/ 2.00 N |
| **MECHANICAL DATA • OUTER CONDUCTOR** | |
| Full Travel | 5.00 mm |
| Working Travel | 4.00 mm |
| Pre-Loaded Spring Force | 1.50/ 3.00/ 4.00 N |
| Spring Force at Working Travel | 4.00/ 6.00/ 8.00 N |
| **TOTAL SPRING FORCE** | |
| Full Spring Force at Working Travel | 5.30/ 6.00/ 7.30/ 8.00/ 9.30/ 10.00 N |
| **ELECTRICAL DATA • INNER CONDUCTOR** | |
| Impedance | 50 Ohm |
| Frequency Range | up to 6 GHz |
| **MATERIALS** | |
| Barrel | Brass, gold-plated |
| Spring | Steel, gold-plated |
| Plunger | CuBe, gold-plated |
| **AVAILABLE SCREW TOOLS** | |
| **Article Designation** | **max. Tip-∅** |
| WFSB 7860/G-8.0 | 8.0 |
| **CABLE DATA** | |
| Type | Multiflex 86 |
| Length | 750 mm |
| Connector Test Probe | MCX |
| Connector Testing Technology | SMA |

**FAKRA PLUG**



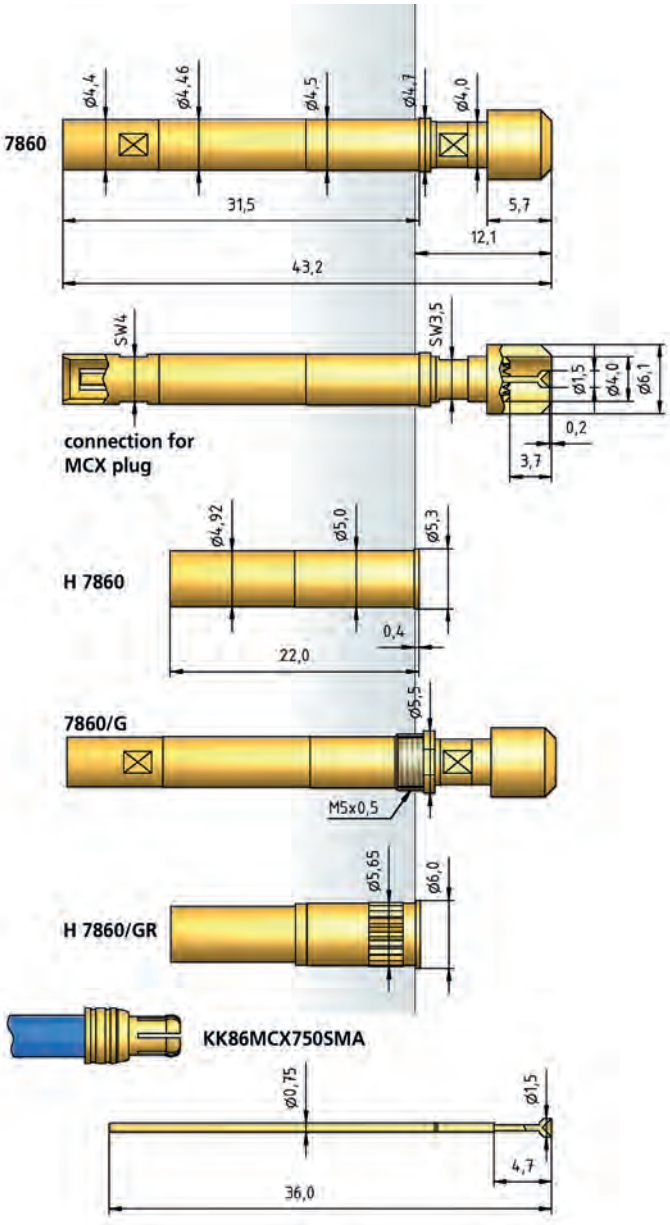


## HOW TO ORDER • COMPLETE TEST PROBE

| 7860/ | G | - | Z25 | A | - | 5.3 N | - | Au | - | 6.1/ | 1.5 | C |
|---|---|---|---|---|---|---|---|---|---|---|---|---|
| 1 | 2 | | 3 | 4 | | 5 | | 6 | | 7 | 8 | 9 |

1 Series 2 Variant treaded Design 3 Outer Conductor Tip 4 Inner Conductor Tip 5 Total Spring Force 6 Tip Plating 7 Outer Tip Diameter 8 Inner Tip Diameter 9 Tip Material (only for CuBe)

## HOW TO ORDER • INNER CONDUCTOR

| 7860 | - | A | - | 1.3 N | - | Au | - | 1.5 | C |
|---|---|---|---|---|---|---|---|---|---|
| 1 | | 2 | | 3 | | 4 | | 5 | 6 |

1 Series 2 Inner Conductor Tip 3 Spring Force 4 Tip Plating 5 Tip Diameter 6 Tip Material (only for CuBe)

L'IMPULSION
Retrouvez nous sur
www.limpulsion.fr

High Frequency Test Probe - Impedance 50 Ohm - up to 6 GHz

# Series 7860 • 7860/G

## FAKRA SOCKET



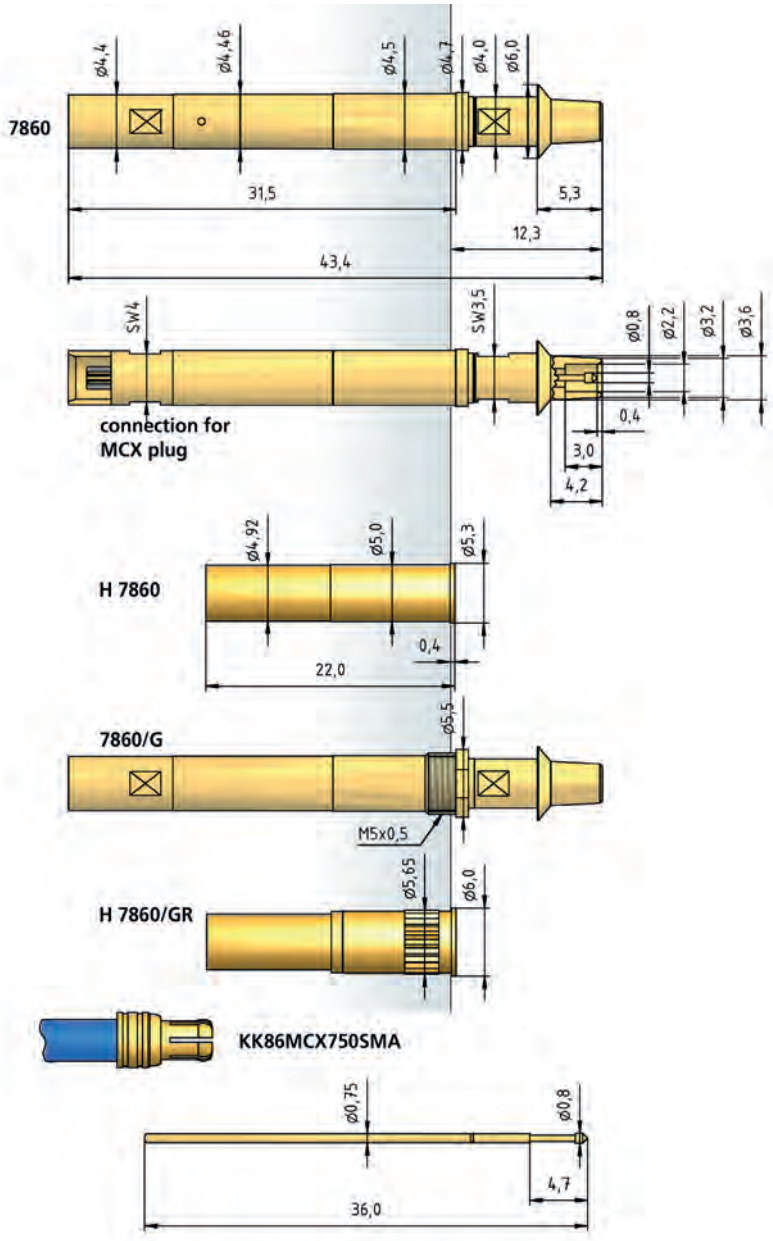


| BENEFIT | |
|---|---|
| For high frequency measurements | |
| Compact design | |
| Also screwable type | |
| Inner conductor and outer tip are independently of each other and interchangeable | |
| **MECHANICAL DATA • INNER CONDUCTOR** | |
| Full Travel | 3.70 mm |
| Working Travel | 2.00 mm |
| Pre-Loaded Spring Force | 0.65/ 0.95 N |
| Spring Force at Working Travel | 1.30/ 2.00 N |
| **MECHANICAL DATA • OUTER CONDUCTOR** | |
| Full Travel | 5.00 mm |
| Working Travel | 4.00 mm |
| Pre-Loaded Spring Force | 1.50/ 3.00/ 4.00 N |
| Spring Force at Working Travel | 4.00/ 6.00/ 8.00 N |
| **TOTAL SPRING FORCE** | |
| Full Spring Force at Working Travel | 5.30/ 6.00/ 7.30/ 8.00/ 9.30/ 10.00 N |
| **ELECTRICAL DATA • INNER CONDUCTOR** | |
| Impedance | 50 Ohm |
| Frequency Range | up to 6 GHz |
| **MATERIALS** | |
| Barrel | Brass, gold-plated |
| Spring | Steel, gold-plated |
| Plunger | CuBe, gold-plated |
| **AVAILABLE SCREW TOOLS** | |
| **Article Designation** | **max. Tip-∅** |
| WFSB 7860/G-8.0 | 8.0 |
| **CABLE DATA** | |
| Type | Multiflex 86 |
| Length | 750 mm |
| Connector Test Probe | MCX |
| Connector Testing Technology | SMA |

## HOW TO ORDER • INNER CONDUCTOR

| 7860 | - | E | - | 1.3 N | - | Au | - | 0.8 | C |
|---|---|---|---|---|---|---|---|---|---|
| 1 | | 2 | | 3 | | 4 | | 5 | 6 |

1 Series 2 Inner Conductor Tip 3 Spring Force 4 Tip Plating 5 Tip Diameter 6 Tip Material (only for CuBe)

## HOW TO ORDER • COMPLETE TEST PROBE

| 7860/ | G | - | Z20 | E | - | 5.3 N | - | Au | - | 3.2/ | 0.8 | C |
|---|---|---|---|---|---|---|---|---|---|---|---|---|
| 1 | 2 | | 3 | 4 | | 5 | | 6 | | 7 | 8 | 9 |

1 Series 2 Variant treaded Design 3 Outer Conductor Tip 4 Inner Conductor Tip 5 Total Spring Force 6 Tip Plating 7 Outer Tip Diameter 8 Inner Tip Diameter 9 Tip Material (only for CuBe)



L'IMPULSION Retrouvez nous sur www.limpulsion.fr

# FIXTURE CUSTOMIZING

**Interface Pins and Interface Test Probes for various adapter interfaces are available for adapter development.**

As a specialist in turned parts, PTR HARTMANN also offers special types for the manufacture of individual interfaces or also counter-contacts for battery applications.

A Marker Probe is available for marking PCBs or similar as correct or defective. This Probe can automatically and extremely quickly mark the required PCBs with a small circle, which ensures that defective parts can be quickly recognized and sorted out.

The Testjet pin is a special pin which is used in adapter development specifically to test HP Testjets or Teradyne Frame Scan applications. The main function of this Test Probe is to keep the pressure on the Testjet sensor plates as low as possible. The springs of the pin adapt the position of the sensor plate to the test piece, which prevents any possible twisting of the plate.

L'IMPULSION Retrouvez nous sur www.limpulsion.fr

| SERIES | CENTER | PAGE |
|---|---|---|
| 1016 | 100 mil / 2.54 mm | 224 |
| 1025.21 | | 225 |
| IF Contacts | | 226 |
| SK 790 | | 227 |





L'IMPULSION Retrouvez nous sur www.limpulsion.fr

# Series 1016

Test Probe 100 mil / 2.54 mm

| BENEFIT | |
|---|---|
| Universal field of application | |
| Contacting of assembled PCBs | |
| Interface pin | |
| **MECHANICAL DATA • 1016 B1** | |
| Center | 2.54 mm / 100 mil |
| Temperature Range | -30 °C - +120 °C |
| Full Travel | 3.10 mm |
| Pre-Loaded Spring Force | 0.55 N |
| Spring Force at Working Travel | 1.25 N |
| **ELECTRICAL DATA** | |
| Max. Current Rating | 3.0 A |
| Typical Continuity Resistance | ≤ 30 mOhm |
| **MATERIALS** | |
| Barrel | Bronze, gold-plated |
| Spring | Spring Steel, gold-plated |
| Plunger | CuBe, gold-plated |
| **RECOMMENDED DIAMETER OF DRILL** | |
| HP 2361.1 (Trolitax) | 1.67 mm |
| with pressed-in Ring | 1.75 mm |
| HGW 2372 (Glass filled material) | 1.69 mm |
| with pressed-in Ring | 1.76 mm |

**TIP STYLE · DIAMETER · PLATING**



| B1 | H2 |
|---|---|
| 1.00C Au | 1.00C Au |

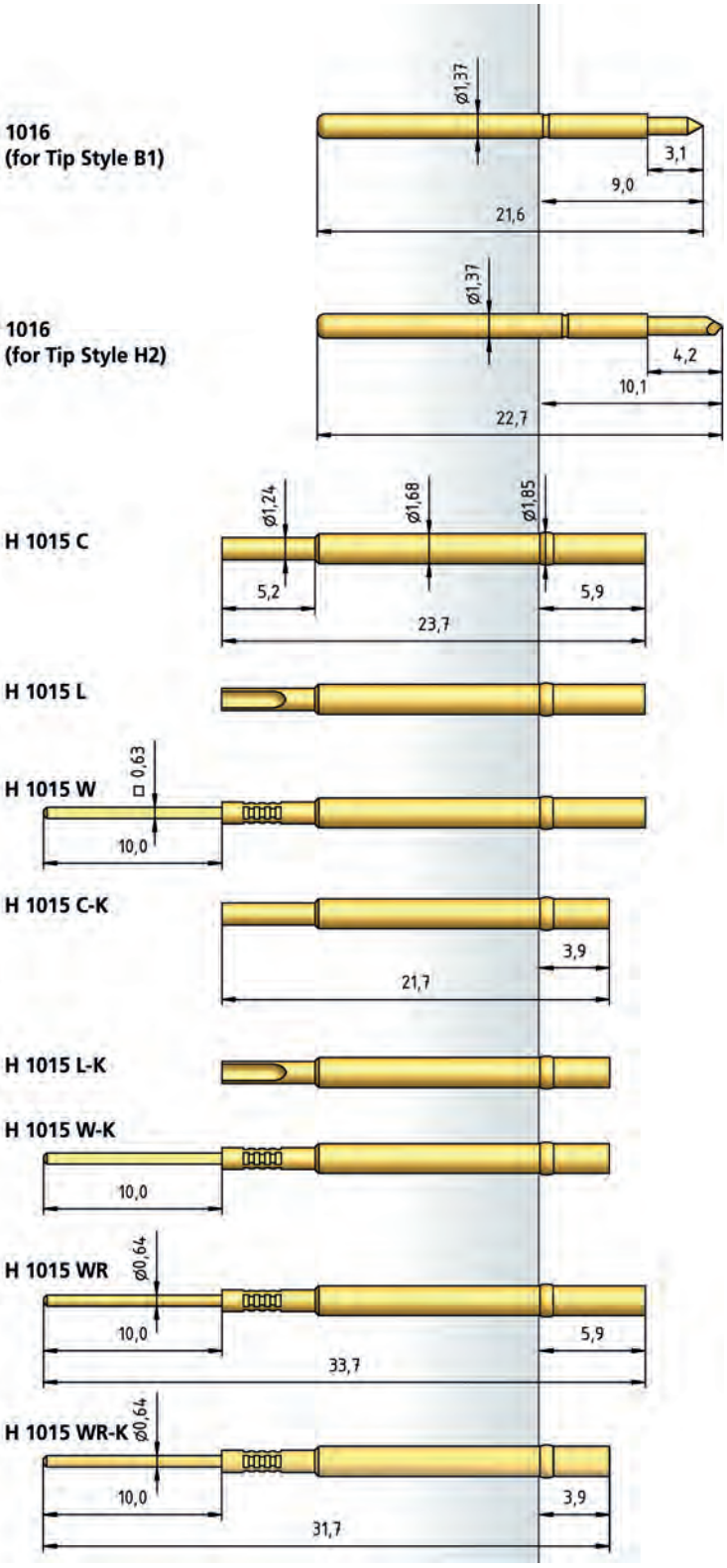


## HOW TO ORDER

| 1016 | - | B1 | - | 1.25 N | - | Au | - | 1.0 | C |
|---|---|---|---|---|---|---|---|---|---|
| 1 | | 2 | | 3 | | 4 | | 5 | 6 |

1 Series 2 Tip Style 3 Spring Force 4 Tip Plating 5 Tip Diameter
6 Tip Material (only for CuBe)

L'IMPULSION
Retrouvez nous sur
www.limpulsion.fr

Testjet Test Probe

# Series 1025.21

## TIP STYLE · DIAMETER · PLATING



| TJ |
|---|
| 1.35/2.65C Au |

## BENEFIT

| |
|---|
| For testing HP Testjet or Teradyne Frame Scan Applications |
| Tip with spring |
| Compensation of possible tilt of the Sensor Plate on the device |

## MECHANICAL DATA

| | |
|---|---|
| Temperature Range | -30 °C - +120 °C |
| Full Travel | 4.80 mm |
| Working Travel | 4.40 mm |
| Pre-Loaded Spring Force | 0.50 N |
| Spring Force at Working Travel | 1.40 N |

## ELECTRICAL DATA

| | |
|---|---|
| Max. Current Rating | 3.0...5.0 A |
| Typical Continuity Resistance | ≤ 20 mOhm |

## MATERIALS

| | |
|---|---|
| Barrel | Bronze, gold-plated |
| Spring | Spring Steel, gold-plated |
| Plunger | CuBe, gold-plated |

## RECOMMENDED DIAMETER OF DRILL

| | |
|---|---|
| HP 2361.1 (Trolitax) | 1.65 mm |
| with pressed-in Ring | 1.75 mm |
| HGW 2372 (Glass filled material) | 1.67 mm |
| with pressed-in Ring | 1.76 mm |

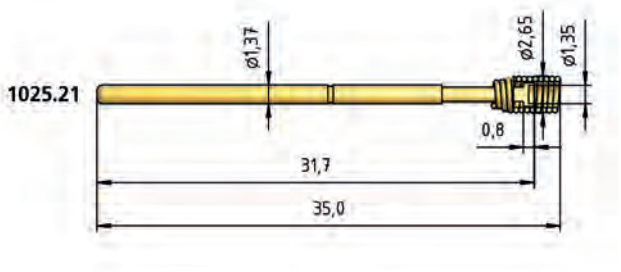


## HOW TO ORDER

| 1025.21 | - | TJ | - | 1.40 N | - | Au | - | 1.35 | /2.65 | C |
|---|---|---|---|---|---|---|---|---|---|---|
| 1 | | 2 | | 3 | | 4 | | 5 | 6 | 7 |

1 Series 2 Tip Style 3 Spring Force 4 Tip Plating 5 Inner Tip Diameter
6 Outer Tip Diameter 7 Tip Material (only for CuBe)



L'IMPULSION Retrouvez nous sur www.limpulsion.fr

# IF Contacts

Interface Contact

| BENEFIT | |
|---|---|
| Universal field of application | |
| Contacting of assembled PCBs | |
| Interface pin | |
| **MECHANICAL DATA** | |
| Temperature Range | -30 °C - +120 °C |
| **ELECTRICAL DATA** | |
| Max. Current Rating | 3.0 A |
| Typical Continuity Resistance | ≤ 30 mOhm |
| **MATERIALS** | |
| IK / GK | Brass, gold-plated |

**GK 75**

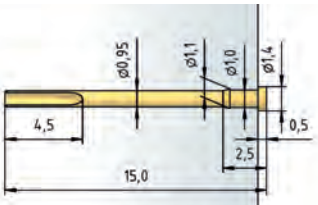


**GK 100**

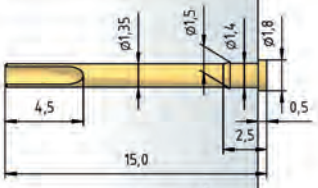


**GK 140**

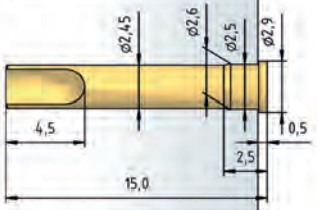


**GK 230**

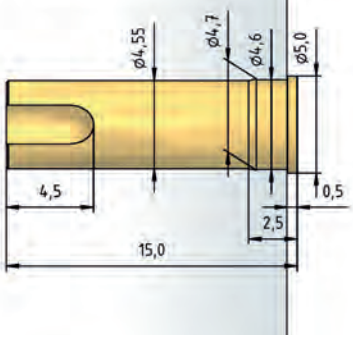


**IK 6010.00**

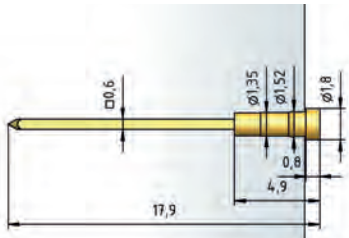


**IK 6010.01**




**IK 6010.02**




**IK 6020.00**

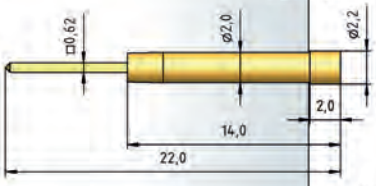


**IK 6020.02**




**IK 6030.00**

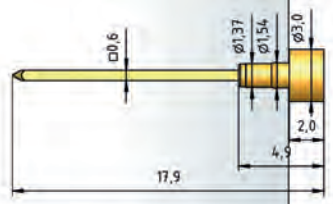


**IK 6040.01**

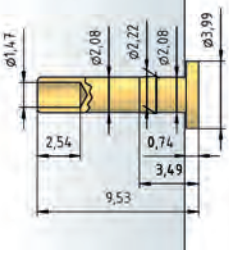


## HOW TO ORDER

| IK | 6010.01 |
|---|---|
| 1 | 2 |

1 Series 2 Variant

L'IMPULSION
Retrouvez nous sur
www.limpulsion.fr

PCB Marker Probe

# SK 790

| BENEFIT | |
|---|---|
| Compact design | |
| Height adjustable | |
| Marker unit changeable | |
| Easy integration into existing systems | |
| **MECHANICAL DATA** | |
| Full Travel | 2.00 mm |
| Working Travel | 1.50 mm |
| Pre-Loaded Spring Force | 0.55 N |
| Spring Force at Working Travel | 3.10 N |
| Marked Area | 2.0 bar |
| Recommended Marking Impulse | approximately 1 bar |
| **ELECTRICAL DATA** | |
| Rated Voltage | 12 V |
| Output | 0.75 W |
| No-Load Current | 3.7 mA |
| Starting Current | 106 mA |
| Max. Permanent Load Current | 81 mA |
| Terminal Resistance | 114 Ohm |
| Pin no-load Speed | 180 min -1 |
| Max. Pin Torque | 54 mNm |
| **MATERIALS** | |
| Needle Material | Solid carbide |
| External Thread | M12x1 with wrench size SW11 |
| Nuts | SW14 |
| **AVAILABLE ACCESSORIES** | |
| **Article Designation** | |
| SK 790-AWE | Replacement Unit |
| WHE 1200/790 | Insertion Tool |
| SK 790-VoWi24V | Series Resistor for 24V |

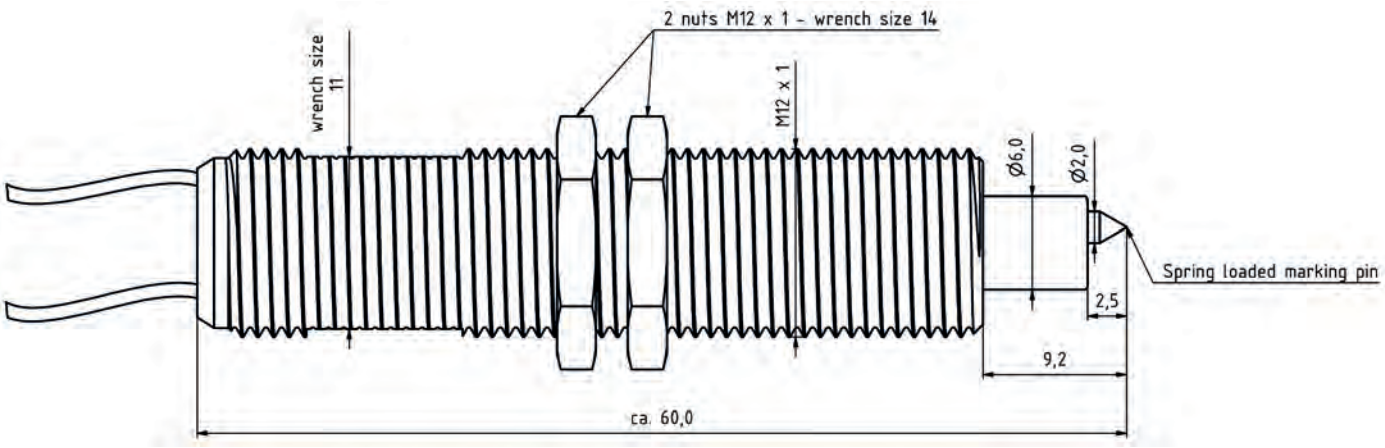


## HOW TO ORDER

**SK 790**
1

1 Series



L'IMPULSION Retrouvez nous sur www.limpulsion.fr

# TOOLS AND ACCESSORIES

**A wide range of accessories is available for the professional use of PTR HARTMANN test probes.**

These include receptacle insertion tools for the ICT test probe range and test probes for use in test modules for cable tests. In addition, we offer screwing tools for our series of test probes with thread, also available as torque screwdrivers. A spring force measuring device, especially suitable for use with the push-back probes needed for the cable test, completes this range. This device makes it possible to carry out the necessary monitoring of contact pressures and their constancy.

L'IMPULSION
Retrouvez nous sur
www.limpulsion.fr






L'IMPULSION
Retrouvez nous sur
www.limpulsion.fr

# Insertion and Extraction Tools

for Test Probes



| TEST PROBE TYPE | SMALLEST SPACING mm / mil | TIP STYLE DIAMETER (mm) | INSERTION TOOL | EXTRACTION TOOL |
|---|---|---|---|---|
| 1008/E | 1.27 / 50 | < 0.5 | WFE 1200/1008E | - |
| 1010 | 1.91 / 75 | 0.9 ... 1.5* | WFEA 1015 | WFEA 1015 |
| 1012/E | 1.91 / 75 | < 0.9 | WFEA 1015 | Flat-Nose-Pliers |
| 1012/E | 1.91 / 75 | 0.9 ... 2.0* | WFEA 1015 | WFEA 1015 |
| 1015 | 2.54 / 100 | < 0.9 | WFEA 1015 | Flat-Nose-Pliers |
| 1015 | 2.54 / 100 | 0.9 ... 2.0* | WFEA 1015 | WFEA 1015 |
| 1021, 2021 | 2.54 / 100 | < 1.2 | WFEA 1021 | Flat-Nose-Pliers |
| 1021, 2021 | 2.54 / 100 | 1.2 ... 2.0* | WFEA 1021 | WFEA 1021 |
| 1025/E | 2.54 / 100 | < 1.1 | WFEA 1025/E | Flat-Nose-Pliers |
| 1025/E | 2.54 / 100 | 1.1 ... 2.3* | WFEA 1025/E | WFEA 1025/E |
| 1028, 2028 | 2.54 / 100 | < 1.5 | WFEA 1028 | Flat-Nose-Pliers |
| 1028, 2028 | 2.54 / 100 | 1.5 ... 2.0* | WFEA 1028 | WFEA 1028 |
| 1029, 2029 | 2.54 / 100 | < 1.5 | WFEA 1028 | Flat-Nose-Pliers |
| 1029, 2029 | 2.54 / 100 | 1.5 ... 2.0* | WFEA 1028 | WFEA 1028 |
| 1030 | 2.54 / 100 | < 1.5 | WFEA 1028 | Flat-Nose-Pliers |
| 1030 | 2.54 / 100 | 1.5 ... 2.0* | WFEA 1028 | WFEA 1028 |
| 1041 | 4.00 / 160 | < 2.0 | WFEA 1050 | Flat-Nose-Pliers |
| 1041 | 4.00 / 160 | 2.0 ... 3.0* | WFEA 1050 | WFEA 1050 |
| 1042 | 4.00 / 160 | < 2.0 | WFEA 1050 | Flat-Nose-Pliers |
| 1042 | 4.00 / 160 | 2.0 ... 3.0* | WFEA 1050 | WFEA 1050 |
| 1050 | 4.00 / 160 | < 2.0 | WFEA 1050 | Flat-Nose-Pliers |
| 1050 | 4.00 / 160 | 2.0 ... 3.0* | WFEA 1050 | WFEA 1050 |
| 1060 | 4.00 / 160 | < 2.0 | WFEA 1050 | Flat-Nose-Pliers |
| 1060 | 4.00 / 160 | 2.0 ... 3.0* | WFEA 1050 | WFEA 1050 |
| 2053 | 2.54 / 100 | < 1.5 | WFEA 1028 | Flat-Nose-Pliers |
| 2053 | 2.54 / 100 | 1.5 ... 2.0* | WFEA 1028 | WFEA 1028 |
| 3010/.. | 4.00 / 160 | < 2.0 | WFEA 1050 | Flat-Nose-Pliers |
| 3010/.. | 4.00 / 160 | 2.0 ... 3.0* | WFEA 1050 | WFEA 1050 |
| 3020/2 | 2.54 / 100 | < 1.2 | WFEA 1021 | Flat-Nose-Pliers |
| 3020/2 | 2.54 / 100 | 1.2 ... 2.0* | WFEA 1021 | WFEA 1021 |
| 3026/2W | 2.54 / 100 | < 1.2 | WFEA 1021 | Flat-Nose-Pliers |
| 3026/2W | 2.54 / 100 | 1.2 ... 2.0* | WFEA 1021 | WFEA 1021 |
| 3030 | 2.54 / 100 | < 1.0 | WFEA 3030 | Flat-Nose-Pliers |
| 3030 | 2.54 / 100 | 1.0 ... 2.3* | WFEA 3030 | WFEA 3030 |

* When to use bigger headdiameters please order for special tools!
When ordering please mention the test probe type!

L'IMPULSION Retrouvez nous sur www.limpulsion.fr

## Receptacle Insertion Tools

Metal Handle Design

| RECEPTACLE | SLEEVE INSERTION TOOL | |
|---|---|---|
| | COMPLETE | INSERTION |
| H 1007 | WHE 1200/07 | WHE 1200/007 |
| H 1008, H1008/E | WHE 1200/08 | WHE 1200/008 |
| H 1010 | WHE 1200/12 | WHE 1200/012 |
| H 1012 | WHE 1200/12 | WHE 1200/012 |
| H 1015, H 1015/G.. | WHE 1200/15 | WHE 1200/015 |
| H 1021 | WHE 1200/21 | WHE 1200/021 |
| H 1021/GV.. | WHE 1200/21-V | WHE 1200/021-V |
| H 1025 | WHE 1200/15 | WHE 1200/015 |
| H 1030 | WHE 1200/30 | WHE 1200/030 |
| H 1050 | WHE 1200/50 | WHE 1200/050 |
| H 1053/GRV, H1053/GVRV | WHE 1200/53-V | WHE 1200/053-V |
| H 1070 | WHE 1200/75 | WHE 1200/075 |
| H 1075, H 1075/G-L | WHE 1200/75 | WHE 1200/075 |
| H 1080/GR-L, H 1080/GR-M5 | WHE 1200/80 | WHE 1200/80 |
| H 2021 | WHE 1200/21 | WHE 1200/021 |
| H 2050 | WHE 1200/50 | WHE 1200/050 |
| H 3014 | WHE 1200/3014 | WHE 1200/03014 |
| H 3023 | WHE 1200/3023 | WHE 1200/03023 |
| H 3024 | WHE 1200/3024 | WHE 1200/03024 |
| H 3026/W | WHE 1200/21 | WHE 1200/21 |
| H 3028/VR.01 | WHE 1200/3028-1 | WHE 1200/03028-1 |
| H 5104.. | WHE 1200/5104 | WHE 1200/05104 |
| SK790 | WHE 1200/790 | WHE 1200/790 |



## Receptacle Extraction Tools

Metal Handle Design

| RECEPTACLE | SLEEVE EXTRACTION TOOL | |
|---|---|---|
| | COMPLETE | INSERTION |
| H 1008 | WHA 1200/08 | WHA 1200/008 |
| H 1012 | WHA 1200/12 | WHA 1200/012 |
| H 1025 | WHA 1200/25 | WHA 1200/025 |

## Receptacle Insertion Tools

Plastic Handle Design

| RECEPTACLE | SLEEVE INSERTION TOOL COMPLETE | MARKING ON TOOL SHANK |
|---|---|---|
| H 1015 | WHE 137 | 1 Ring |
| H 1015/G | WHE 137 | 1 Ring |
| H 1021 | WHE 165 | 2 Rings |
| H 1021/G | WHE 165 | 2 Rings |
| H 1042 | WHE 300 | 4 Rings |
| H 1050 | WHE 265 | 3 Rings |
| H 1060/G | WHE 265 | 3 Rings |
| H 2021 | WHE 165 | 2 Rings |
| H 2050 | WHE 265 | 3 Rings |
| H 3010, H 3010-22, H 3010/S-23, H 3010/S-28 | WHE 265 | 3 Rings |
| H 3010/GS, H 3010/GW, H 3010/GW5, H 3010/GWR5 | WHE 265 | 3 Rings |
| H 3011 | WHE 265 | 3 Rings |
| H 3020, H 3020/S-26 | WHE 165 | 2 Rings |
| H 3020/GS-26, H 3020/ GRS-26, H 3020/GW5, H 3020/GWR5 | WHE 165 | 2 Rings |
| H 3023/G, H 3023/5G, H 3023/GWR5 | WHE 165 | 2 Rings |





L'IMPULSION Retrouvez nous sur www.limpulsion.fr

# Screwing Tools / Screw-In Torques Test Probes with Thread

**IMPORTANT**: If excessive torque is applied, this may destroy the threaded test probe (broken thread, buckling of barrel and/or receptacle, damage to the barrel square-end or screw slot), or it may destroy the screwing tool (cracking/splitting of the square end, damage to the square-end surfaces etc. –> loss of grip)

| SERIES | SMALLEST CENTER | MAX. HEAD DIAMETER | TOOL TYPE | SCREWING TOOLS (¼" INCH CONNECTION) | RECOMMENDED SCREWING-IN TORQUE | MAXIMUM SCREWING-IN TORQUE |
|---|---|---|---|---|---|---|
| 1007/G | 1.27 | 1.0 | A | WFSB 1007/G-1.27-1.0 | 0.5 ... 1.0 Ncm | max. 1.0 Ncm |
| 1010/G | 1.50 | 1.0 | A | WFSB 1010/G-1.5-1.0 | 1.0 Ncm | max. 1.5 Ncm |
| | 2.30 | 1.5 | B | WFSB 1010/G-2.3-1.5-Z | 1.0 Ncm | max. 1.5 Ncm |
| 1012/G | 1.50 | 1.0 | A | WFSB 1012/G-1.5-1.0 | 0.5 ... 1.0 Ncm | max. 1.0 Ncm |
| | 1.90 | 1.5 | B | WFSB 1012/G-1.9-1.5-Z | 0.5 ... 1.0 Ncm | max. 1.0 Ncm |
| 1015/G | 2.54 | 1.5 | A | WFSB 1015/G-2.54-1.5 | 2.0 Ncm | max. 3.0 Ncm |
| | 2.54 | 1.8 | A | WFSB 1015/G-2.54-1.8 | 2.0 Ncm | max. 3.0 Ncm |
| 1021/G, 1021/GV | 2.54 | 1.8 | A | WFSB 1021/G-2.54-1.8 | 3.0 Ncm | max. 5.0 Ncm |
| | 2.54 | 2.0 | A | WFSB 1021/G-2.54-2.0 | 3.0 Ncm | max. 5.0 Ncm |
| | 3.00 | 2.5 | B | WFSB 1021/G-C2S-3.0-2.5-Z | 3.0 Ncm | max. 5.0 Ncm |
| | 3.50 | 3.0 | B | WFSB 1021/G-3.5-3.0-Z | 2.0 Ncm | max. 3.0 Ncm |
| 1021/G-D19xx, F19xx | 2.54 | 1.5 | C | WFSB 1021/G-2.54-1.5-SW | 2.0 Ncm | max. 3.0 Ncm |
| | 3.00 | 1.5 | C | WFSB 1021/G-3.0-1.5-SW | 3.0 Ncm | max. 5.0 Ncm |
| 1021/GT-D17xx, F17xx | Plate-∅ ≥ 2.1 | 1.5 | F | WFSB 1021/GT-1 | 3.0 Ncm | max. 5.0 Ncm |
| | Plate-∅ ≥ 2.8 | 1.6 - 2.2 | F | WFSB 1021/GT-2 | 3.0 Ncm | max. 5.0 Ncm |
| 1024/G, 1028/G | 2.54 | 1.8 | A | WFSB 1021/G-2.54-1.8 | 3.0 Ncm | max. 5.0 Ncm |
| | 2.54 | 2.0 | A | WFSB 1021/G-2.54-2.0 | 3.0 Ncm | max. 5.0 Ncm |
| | 3.00 | 2.5 | B | WFSB 1021/G-C2S-3.0-2.5-Z | 3.0 Ncm | max. 5.0 Ncm |
| | 3.50 | 3.0 | B | WFSB 1021/G-3.5-3.0-Z | 2.0 Ncm | max. 3.0 Ncm |
| 1042/G | all | all | D | WFSB 3012/G-S1.8 | 4.0 Ncm | max. 15.0 Ncm |
| 1053/G | 5.00 | 4.0 | B | WFSB 1053/G-5.0-4.0-Z | 4.0 Ncm | max. 7.0 Ncm |
| | 6.00 | 5.0 | B | WFSB 1053/G-6.0-5.0-Z | 4.0 Ncm | max. 7.0 Ncm |
| 1060/G | 4.00 | 3.0 | A | WFSB 1060/G-4.0-3.0 | 4.0 Ncm | max. 15.0 Ncm |
| | 5.00 | 4.0 | B | WFSB 1060/G-5.0-4.0-Z | 4.0 Ncm | max. 15.0 Ncm |
| | 6.00 | 5.0 | B | WFSB 1060/G-6.0-5.0-Z | 4.0 Ncm | max. 15.0 Ncm |
| 1060/G-D19xx, F19xx | 4.00 | 2.3 | C | WFSB 1060/G-4.0-2.3-SW | 3.0 Ncm | max. 5.0 Ncm |
| 1060/GT-F16xx | Plate-∅ ≥ 3.5 | from 3.3 | F | WFSB 1021/GT-1 | 3.0 Ncm | max. 5.0 Ncm |
| 1060/GT-D17xx, F17xx | Plate-∅ ≥ 2.1 | 1.5 | F | WFSB 1021/GT-1 | 3.0 Ncm | max. 5.0 Ncm |
| | Plate-∅ ≥ 2.8 | 2.2 | F | WFSB 1021/GT-1 | 3.0 Ncm | max. 5.0 Ncm |
| | Plate-∅ ≥ 4.0 | **3.3** | **F** | WFSB 1060/GT | 3.0 Ncm | max. 5.0 Ncm |
| 1061/G | 4.00 | 3.0 | A | WFSB 1060/G-4.0-3.0 | 4.0 Ncm | max. 15.0 Ncm |
| 1075/G | 5.00 | 4.0 | A | WFSB 1070/G-5.0-4.0 | 4.0 Ncm | max. 15.0 Ncm |
| 1078/G | 7.00 | 5.0 | A | WFSB 3015/G-7.0 | 30.0 Ncm | max. 40.0 Ncm |
| 1080/G | 7.60 | 6.0 | | Standard Socket - Wrench 6.0 mm | 30.0 Ncm | max. 40.0 Ncm |
| 3010/2G | 4.00 | 3.0 | A | WFSB 1060/G-4.0-3.0 | 4.0 Ncm | max. 15.0 Ncm |
| | 5.00 | 4.0 | B | WFSB 1060/G-5.0-4.0-Z | 4.0 Ncm | max. 15.0 Ncm |
| | 6.00 | 5.0 | B | WFSB 1060/G-6.0-5.0-Z | 4.0 Ncm | max. 15.0 Ncm |
| 3010/2G5 | 4.00 | 3.0 | A | WFSB 1060/G-4.0-3.0 | 4.0 Ncm | max. 15.0 Ncm |
| | 5.00 | 4.0 | B | WFSB 1060/G-5.0-4.0-Z | 4.0 Ncm | max. 15.0 Ncm |
| | 6.00 | 5.0 | B | WFSB 1060/G-6.0-5.0-Z | 4.0 Ncm | max. 15.0 Ncm |
| 3010/2GW | 4.00 | 3.0 | A | WFSB 1060/G-4.0-3.0 | 4.0 Ncm | max. 15.0 Ncm |
| | 5.00 | 4.0 | B | WFSB 1060/G-5.0-4.0-Z | 4.0 Ncm | max. 15.0 Ncm |
| | 6.00 | 5.0 | B | WFSB 1060/G-6.0-5.0-Z | 4.0 Ncm | max. 15.0 Ncm |
| 3010/2GW5 | 4.00 | 3.0 | A | WFSB 1060/G-4.0-3.0 | 4.0 Ncm | max. 15.0 Ncm |
| | 5.00 | 4.0 | B | WFSB 1060/G-5.0-4.0-Z | 4.0 Ncm | max. 15.0 Ncm |
| | 6.00 | 5.0 | B | WFSB 1060/G-6.0-5.0-Z | 4.0 Ncm | max. 15.0 Ncm |
| 3010/10G | 4.00 | 3.0 | A | WFSB 1060/G-4.0-3.0 | 4.0 Ncm | max. 15.0 Ncm |
| | 5.00 | 4.0 | B | WFSB 1060/G-5.0-4.0-Z | 4.0 Ncm | max. 15.0 Ncm |
| | 6.00 | 5.0 | B | WFSB 1060/G-6.0-5.0-Z | 4.0 Ncm | max. 15.0 Ncm |

L'IMPULSION Retrouvez nous sur www.limpulsion.fr

# Screwing Tools / Screw-In Torques Test Probes with Thread

| SERIES | SMALLEST CENTER | MAX. HEAD DIAMETER | TOOL TYPE | SCREWING TOOLS (¼" INCH CONNECTION) | RECOMMENDED SCREWING-IN TORQUE | MAXIMUM SCREWING-IN TORQUE |
|---|---|---|---|---|---|---|
| 3011/2GS, 3011/2FGS | 4.00 | 3.0 | A | WFSB 1060/G-4.0-3.0 | 4.0 Ncm | max. 15.0 Ncm |
| | 5.00 | 4.0 | B | WFSB 1060/G-5.0-4.0-Z | 4.0 Ncm | max. 15.0 Ncm |
| | 6.00 | 5.0 | B | WFSB 1060/G-6.0-5.0-Z | 4.0 Ncm | max. 15.0 Ncm |
| 3012/2GS | all | all | D | WFSB 3012/G-S1.8 | 4.0 Ncm | max. 7.0 Ncm |
| 3012/2GSL (Plungers with Pins) | all | all | D | WFSB 3012/G-S1.8 | 4.0 Ncm | max. 7.0 Ncm |
| 3012/2GSL (Plungers without Pins) | 4.00 | 2.6 | A | WFSB 3012-4.0-2.6 | 4.0 Ncm | max. 7.0 Ncm |
| 3014/2G | 4.00 | 3.0 | A | WFSB 1060/G-4.0-3.0 | 4.0 Ncm | max. 15.0 Ncm |
| | 5.00 | 4.0 | B | WFSB 1060/G-5.0-4.0-Z | 4.0 Ncm | max. 15.0 Ncm |
| | 6.00 | 5.0 | B | WFSB 1060/G-6.0-5.0-Z | 4.0 Ncm | max. 15.0 Ncm |
| 3015/G | 7.00 | 5.0 | A | WFSB 3015/G-7.0 | 5.0 Ncm | max. 15.0 Ncm |
| 3020/2G, 3020/2GW5 | 2.54 | 1.8 | A | WFSB 1021/G-2.54-1.8 | 3.0 Ncm | max. 5.0 Ncm |
| | 2.54 | 2.0 | A | WFSB 1021/G-2.54-2.0 | 3.0 Ncm | max. 5.0 Ncm |
| | 3.00 | 2.5 | B | WFSB 1021/G-C2S-3.0-2.5-Z | 3.0 Ncm | max. 5.0 Ncm |
| | 3.50 | 3.0 | B | WFSB 1021/G-3.5-3.0-Z | 2.0 Ncm | max. 3.0 Ncm |
| 3023/2GS | 2.54 | 1.8 | A | WFSB 1021/G-2.54-1.8 | 3.0 Ncm | max. 5.0 Ncm |
| | 2.54 | 2.0 | A | WFSB 1021/G-2.54-2.0 | 3.0 Ncm | max. 5.0 Ncm |
| | 3.00 | 2.5 | B | WFSB 1021/G-C2S-3.0-2.5-Z | 3.0 Ncm | max. 5.0 Ncm |
| | 3.50 | 3.0 | B | WFSB 1021/G-3.5-3.0-Z | 2.0 Ncm | max. 3.0 Ncm |
| 3024/2G | 2.54 | 1.8 | A | WFSB 1021/G-2.54-1.8 | 3.0 Ncm | max. 5.0 Ncm |
| | 2.54 | 2.0 | A | WFSB 1021/G-2.54-2.0 | 3.0 Ncm | max. 5.0 Ncm |
| | 3.00 | 2.5 | B | WFSB 1021/G-C2S-3.0-2.5-Z | 3.0 Ncm | max. 5.0 Ncm |
| | 3.50 | 3.0 | B | WFSB 1021/G-3.5-3.0-Z | 2.0 Ncm | max. 3.0 Ncm |
| 3028.01 | 2.54 | 1.8 | A | WFSB 1021/G-2.54-1.8 | 3.0 Ncm | max. 5.0 Ncm |
| | 2.54 | 2.0 | A | WFSB 1021/G-2.54-2.0 | 3.0 Ncm | max. 5.0 Ncm |
| | 3.00 | 2.5 | B | WFSB 1021/G-C2S-3.0-2.5-Z | 3.0 Ncm | max. 5.0 Ncm |
| | 3.50 | 3.0 | B | WFSB 1021/G-3.5-3.0-Z | 2.0 Ncm | max. 3.0 Ncm |
| 3030/GW3 | 2.54 | 1.5 | A | WFSB 1015/G-2.54-1.5 | 2.0 Ncm | max. 3.0 Ncm |
| | 2.54 | 1.8 | A | WFSB 1015/G-2.54-1.8 | 2.0 Ncm | max. 3.0 Ncm |
| 3035/GW | 1.50 | 1.0 | A | WFSB 1012/G-1.5-1.0 | 0.5 ... 1.0 Ncm | max. 1.0 Ncm |
| | 1.90 | 1.5 | B | WFSB 1012/G-1.9-1.5-Z | 0.5 ... 1.0 Ncm | max. 1.0 Ncm |
| 3212/2GS (Plungers with Pins) | all | all | D | WFSB 3012/G-S1.8 | 4.0 Ncm | max. 7.0 Ncm |
| 3212/2GS (Plungers without Pins) | 4.00 | 2.6 | A | WFSB 3012-4.0-2.6 | 4.0 Ncm | max. 7.0 Ncm |
| 3212/2GS | 4.00 | 3.0 | B | WFSB 3012/G-4.0-3.0-Z | 4.0 Ncm | max. 7.0 Ncm |
| 4004/G | 4.00 | 3.0 | A | WFSB 1060/G-4.0-3.0 | 4.0 Ncm | max. 15.0 Ncm |
| | 5.00 | 4.0 | B | WFSB 1060/G-5.0-4.0-Z | 4.0 Ncm | max. 15.0 Ncm |
| | 6.00 | 5.0 | B | WFSB 1060/G-6.0-5.0-Z | 4.0 Ncm | max. 15.0 Ncm |
| 5087 | 4.00 | 2.5 | A | WFS 5087-4.0-2.5 | 5.0 Ncm | max. 15.0 Ncm |
| | 5.00 | 4.0 | B | WFSB 5087-5.0-4.0-Z | 5.0 Ncm | max. 15.0 Ncm |
| 5104 | 4.00 | 3.0 | A | WFSB 1060/G-4.0-3.0 | 4.0 Ncm | max. 15.0 Ncm |
| | 5.00 | 4.0 | B | WFSB 1060/G-5.0-4.0-Z | 4.0 Ncm | max. 15.0 Ncm |
| | 6.00 | 5.0 | B | WFSB 1060/G-6.0-5.0-Z | 4.0 Ncm | max. 15.0 Ncm |
| 5110/G | 4.00 | 3.0 | A | WFSB 1060/G-4.0-3.0 | 4.0 Ncm | max. 15.0 Ncm |
| | 5.00 | 4.0 | B | WFSB 1060/G-5.0-4.0-Z | 4.0 Ncm | max. 15.0 Ncm |
| | 6.00 | 5.0 | B | WFSB 1060/G-6.0-5.0-Z | 4.0 Ncm | max. 15.0 Ncm |

**A** – closed square-head | **B** – claw (only for two-line assembly) | **D** – screwdriver for slotted screws | **E** – hexagon socket key | **F** – three point wrench
Other tools on request! When ordering tools, please specify the test probe to be assembled!



L'IMPULSION Retrouvez nous sur www.limpulsion.fr

# Screwing Tools / Screw-In Torques Test Probes with Thread

**IMPORTANT**: If excessive torque is applied, this may destroy the threaded test probe (broken thread, buckling of barrel and/or receptacle, damage to the barrel square-end or screw slot), or it may destroy the screwing tool (cracking/splitting of the square end, damage to the square-end surfaces etc. –> loss of grip)

| SERIES | SMALLEST CENTER | MAX. HEAD DIAMETER | TOOL TYPE | SCREWING TOOLS (¼" INCH CONNECTION) | RECOMMENDED SCREWING-IN TORQUE | MAXIMUM SCREWING-IN TORQUE |
|---|---|---|---|---|---|---|
| 5203 | 2.54 | 2.0 | A | WFSB 5203-2.54-2.0 | 3.0 Ncm | max. 5.0 Ncm |
| | 3.50 | 2.7 | B | WFSB 5203-3.5-2.7-Z | 3.0 Ncm | max. 5.0 Ncm |
| 5207/G | all | all | E | Hexagon Socket Key 2 mm | 4.0 Ncm | max. 15.0 Ncm |
| 5248/G | 2.5 | 2.0 | A | WFSB 5248/G-2,54-2,0 | 3.0 Ncm | max. 5.0 Ncm |
| 5257/G | 2.54 | 1.8 | A | WFSB 1021/G-2.54-1.8 | 3.0 Ncm | max. 5.0 Ncm |
| | 2.54 | 2.0 | A | WFSB 1021/G-2.54-2.0 | 3.0 Ncm | max. 5.0 Ncm |
| | 3.00 | 2.5 | B | WFSB 1021/G-C2S-3.0-2.5-Z | 3.0 Ncm | max. 5.0 Ncm |
| | 3.50 | 3.0 | B | WFSB 1021/G-3.5-3.0-Z | 2.0 Ncm | max. 3.0 Ncm |
| 5265 | 3.00 | 2.3 | A | WFSB 5265-3.0-2.3 | 3.0 Ncm | max. 5.0 Ncm |
| | 3.00 | 2.5 | B | WFSB 5265-3.0-2.5-Z | 3.0 Ncm | max. 5.0 Ncm |
| | 3.50 | 3.0 | B | WFSB 5265-3.5-3.0-Z | 3.0 Ncm | max. 5.0 Ncm |
| 5310/G | 2.54 | 1.8 | A | WFSB 1021/G-2.54-1.8 | 3.0 Ncm | max. 5.0 Ncm |
| | 2.54 | 2.0 | A | WFSB 1021/G-2.54-2.0 | 3.0 Ncm | max. 5.0 Ncm |
| 7840/G | / | 8.0 | B | WFSB 7840/G-8.0 | 5.0 Ncm | max. 8.0 Ncm |
| 7860/G | / | 8.0 | B | WFSB 7860/G-8.0 | 5.0 Ncm | max. 8.0 Ncm |

**A** – closed square-head **| B** – claw (only for two-line assembly) **| D** – screwdriver for slotted screws **| E** – hexagon socket key **| F** – three point wrench
Other tools on request! When ordering tools, please specify the test probe to be assembled!

L'IMPULSION Retrouvez nous sur www.limpulsion.fr

# Screwing Tools for Test Probes with Thread

## Screwing Tools for Test Probes with Thread

Tool Type with ¼" Inch Connection

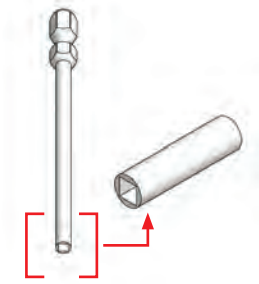

**A** Closed Square Head

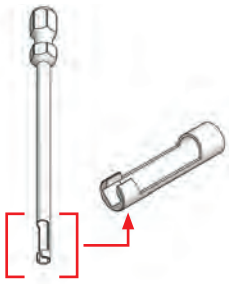

**B** Claw (only for two-line assembly)

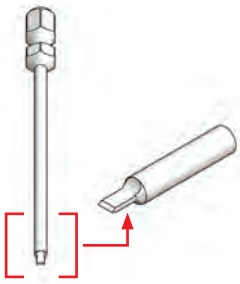

**D** Screwdriver for Slotted Screws



**E** Hexagon Socket Key

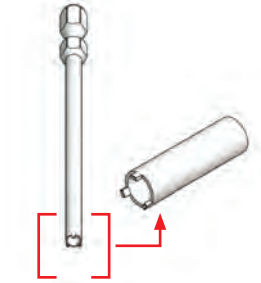

**F** Three Point Wrench

## Screwing Tool without Torque Limit GS 63

Tool Reception ¼" Inch

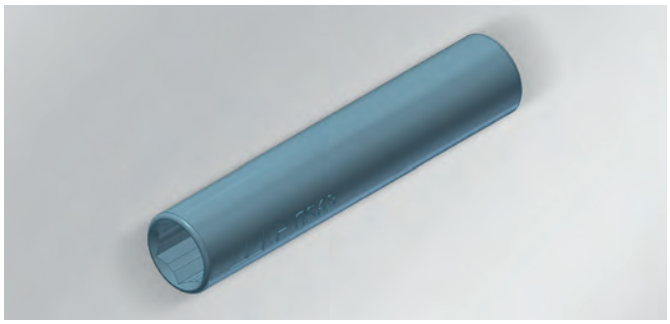

## Screwing Tool with Torque Limit (Ratchet) GSD-x

Tool Reception ¼" Inch

| TYPE | COLOUR CODE | SECTOR |
|---|---|---|
| GSD-1 | gold | 1 Ncm |
| GSD-2 | green | 2 Ncm |
| GSD-3 | blue | 3 Ncm |
| GSD-4 | red | 4 Ncm |

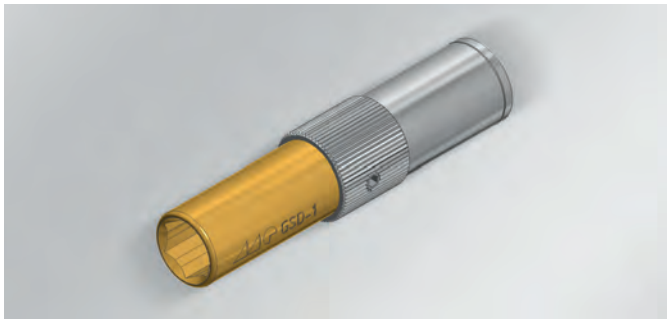



L'IMPULSION Retrouvez nous sur www.limpulsion.fr

## Assembly Tools for High Frequency Test Probe

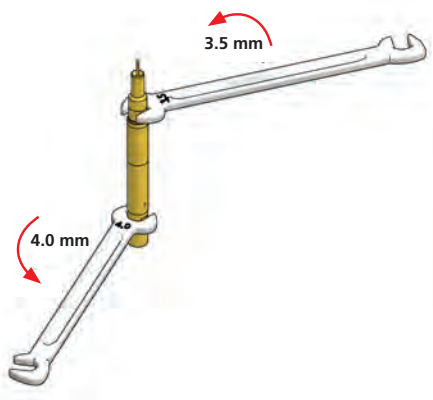


Spanners

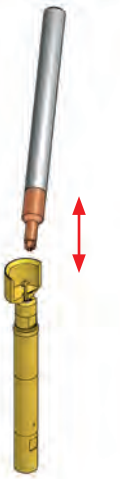

Assembly / Dismantling of the Inner Conductor using the Special Tool

| SERIES | MAX. HEAD DIAMETER | TOOL TYPE |
|---|---|---|
| 7840(/G) / 7860(/G) | 0.5 | WFK 7860-i-05 |
| 7840(/G) / 7860(/G) | 1.8 | WFK 7860-i-18 |
| 7840(/G) / 7860(/G) | | SW 3.5 |
| 7840(/G) / 7860(/G) | | SW 4.0 |
| 7890 | | SW 2.5 |
| 7890 | | SW 3.0 |

## Tool Changing WA 834 for Mounting Receptacles



| CONTENT |
|---|
| Basic tool WA 834 with standard spring F 834-7.0N-E |
| Standard spring can be replaced with the stronger spring F 834-14.0N-E |

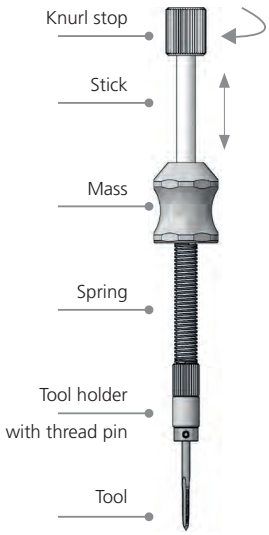


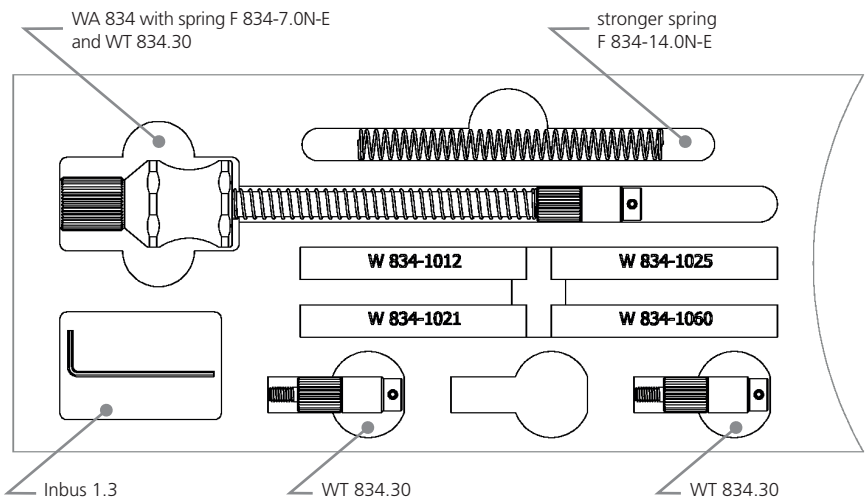


L'IMPULSION Retrouvez nous sur www.limpulsion.fr

## Crimp Tool AFM8

| HIGHLIGHTS | |
|---|---|
| 4 point crimping | |
| For receptacles | |
| Crimping capacities adjustable | |
| **SPECIFICATIONS** | |
| Wire Size | 0.09 - 0.82 mm² |
| AWG | 32 - 20 |
| Weight | 332,75 g |

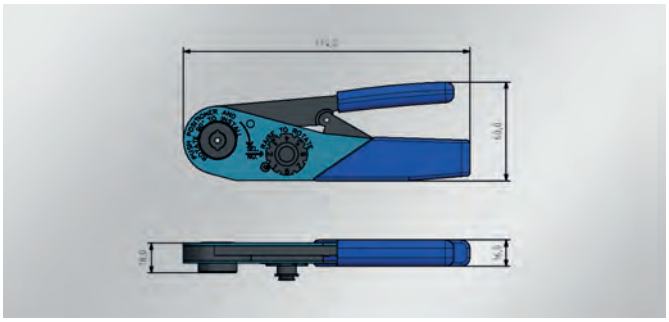

## Torque Screwdriver

| TYPE | PRESET TORQUE |
|---|---|
| DMS 1 | 1 Ncm |
| DMS 2 | 2 Ncm |
| DMS 3 | 3 Ncm |
| DMS 4 | 4 Ncm |



## Digital Force Gauge FKT50

| SPECIFICATIONS | |
|---|---|
| Measuring range | 0 ... 50 N |
| Resolution | 0,01 N |
| Pressure calibration | 0,1 Mpa |
| Load cell | Integrated load cell with M6 connection |
| Measuring range | 1 ... 100 % of the full scale |
| Measurement accuracy | ± 0,5 % |
| Units | N, kg, lb |
| Display | LCD |
| Display Orientation | 0° /180° |
| Power supply | Internal battery, 12V / 1 A power adapter |
| Operating temperature | +10 ... +30 °C / 50 ... 86°F |
| Relative humidity | 15 ... 80 % relative humidity |
| Weight | 1 kg / 2.2 lbs |
| Interface | USB |




| DIMENSION | | |
|---|---|---|
| Ø A (mm) | Ø B (mm) | CENTER (mm) |
| 2.1 | 1.6 | 2.54 |
| 2.6 | 2.1 | 2.54 |
| 3.6 | 3.1 | 4.0 |
| 4.6 | 4.1 | 5.0 |
| 5.6 | 5.1 | 6.0 |

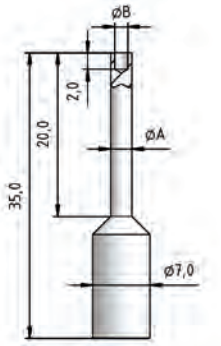


Test Point



L'IMPULSION Retrouvez nous sur www.limpulsion.fr

# Series Index


| SERIES DESIGNATION | PAGE |
|---|---|
| 1001 | 30 |
| 1002 | 31 |
| 1003 | 32 |
| 1004/E | 64 |
| 1005 | 33 |
| 1006 | 34 |
| 1007 | 38 |
| 1007.50 | 39 |
| 1007.60 | 40 |
| 1007.70 | 41 |
| 1007/G | 96 |
| 1008/D | 86 |
| 1008/E | 65 |
| 1008/E – HPL | 80 |
| 1008/E.50 | 66 |
| 1010 | 42 |
| 1010.50 | 43 |
| 1010/G | 97 |
| 1011 | 44 |
| 1012/D | 87 |
| 1012/E | 67 |
| 1012/E – HPL | 81 |
| 1012/G | 98 |
| 1012/G for Position Test | 99 |
| 1013/Z | 68 |
| 1015 | 45 |
| 1015.50 | 46 |
| 1015/G | 100 |
| 1015/G for Position Test | 101 |
| 1016 | 47 |
| 1016 – Fixture Customizing | 224 |
| 1018 | 48 |
| 1018.06 | 49 |
| 1021 • 1021/G – High-Current | 164 |
| 1021/G | 102 |
| 1021/G for Position Test | 103 |
| 1021/GT for Position Test | 104 |
| 1021/GV | 120 |
| 1025.21 | 225 |

| SERIES DESIGNATION | PAGE |
|---|---|
| 1025/D | 88 |
| 1025/E | 69 |
| 1025/E – HPL | 82 |
| 1028/G | 105 |
| 1030 | 52 |
| 1034/E | 70 |
| 1036/E | 71 |
| 1040 | 54 |
| 1041 • 1041W | 58 |
| 1042 | 59 |
| 1042/G | 112 |
| 1050 | 55 |
| 1051 • 1061 | 57 |
| 1053 | 119 |
| 1053/G | 121 |
| 1054 | 53 |
| 1055 | 60 |
| 1060 | 56 |
| 1060 • 1060/G – High-Current | 167 |
| 1060/G | 107 |
| 1060/G for Position Test | 108 |
| 1060/GT for Position Test | 109 |
| 1061/G | 110 |
| 1064 | 182 |
| 1075 • 1075/G – High-Current | 168 |
| 1078/G – High-Current | 169 |
| 1080/G – High-Current | 170 |
| 2021 • 1021 | 72 |
| 2024 • 1024 | 73 |
| 2028 • 1028 | 74 |
| 2029 | 75 |
| 2053 | 118 |
| 3003 | 128 |
| 3010/2 • 3010/10 | 129 |
| 3010/2F | 130 |
| 3010/2G • 3010/10G | 142 |
| 3010/2GW(5) | 143 |
| 3010/2V | 132 |
| 3010/2W | 131 |


L'IMPULSION Retrouvez nous sur www.limpulsion.fr

# Series Index


| SERIES DESIGNATION | PAGE |
|---|---|
| 3011/2FGS | 145 |
| 3011/2GS | 144 |
| 3012/2GS | 146 |
| 3012/2GS • FS1/FLS1 | 147 |
| 3012/2GSL | 148 |
| 3014/2G | 149 |
| 3015.06 | 133 |
| 3015/G | 152 |
| 3020/2 | 125 |
| 3020/2G | 137 |
| 3020/2GW5 | 138 |
| 3023/2GS | 139 |
| 3024/2G | 140 |
| 3026/2W | 126 |
| 3028.01 | 156 |
| 3030 | 127 |
| 3030/GW3 | 141 |
| 3035 | 124 |
| 3035/GW | 136 |
| 3212/2GS | 150 |
| 3214/2GW | 151 |
| 4004 | 176 |
| 4004/G | 178 |
| 4005 | 175 |
| 4006 | 174 |
| 4034 | 177 |
| 5082 | 191 |
| 5082.01 | 192 |
| 5082/L | 193 |
| 5087 | 159 |
| 5099 | 187 |
| 5099.04 | 188 |
| 5099.43 | 189 |
| 5104 | 160 |
| 5110/S | 190 |
| 5110/G | 111 |
| 5110/S • 5110/G – High-Current | 166 |
| 5203 | 157 |
| 5207 | 204 |

| SERIES DESIGNATION | PAGE |
|---|---|
| 5207/G | 205 |
| 5248/G | 92 |
| 5257/G | 93 |
| 5265 | 158 |
| 5303 | 183 |
| 5303/LR01 | 184 |
| 5303/T01 | 185 |
| 5305 | 186 |
| 5310/G | 106 |
| 5310/G – High-Current | 165 |
| FKB5322 – SMD | 196 |
| PKB5322 – SMD | 197 |
| FKB5322 – L01 | 198 |
| FKB5322 – T01 | 199 |
| FKB5457 – SMD | 201 |
| FKB5458 – SMD | 200 |
| 7840 • 7840/G PCB Contact | 210 |
| 7860 • 7860/G – Z1 | 211 |
| MM8130 • MM8430 • MS156 | |
| 7860 • 7860/G – Z2 | 212 |
| MM8130 • MM8430 • MS156 | |
| 7860 • 7860/G – Z3 U.FL-m | 213 |
| 7860 • 7860/G – Z4 R-SMA-m | 214 |
| 7860 • 7860/G – Z5 MCX-f | 215 |
| 7860 • 7860/G – Z6 SMA-f | 216 |
| 7860 • 7860/G – Z7 SMB-m | 217 |
| 7860 • 7860/G – Z8 SMB-f | 218 |
| 7860 • 7860/G – Z9 SMC-m | 219 |
| 7860 • 7860/G – Z20 FAKRA Socket | 221 |
| 7860 • 7860/G – Z25 FAKRA Plug | 220 |
| 7890 – Z1 MINI FAKRA Socket | 209 |
| 7890 – Z2 MINI FAKRA Plug | 208 |
| IF Contacts | 227 |
| GK Contacts | 227 |
| Receptacles 1012 | 76 |
| Receptacles 1021/G | 113 |
| Receptacles 1025 | 77 |
| Receptacles 1060/G | 114 |
| Pneumatic Accessories | 179 |
| SK 790 – PCB Marker Probe | 226 |


L'IMPULSION Retrouvez nous sur www.limpulsion.fr

# Imprint

**PTR HARTMANN GmbH**
Gewerbehof 38
59368 Werne, Germany
Phone +49 2389 7988-0
Fax +49 2389 7988-88
info@ptr-hartmann.com
www.ptr-hartmann.com

**Design:**
PTR HARTMANN GmbH
Databased-Publishing:
cybob communication GmbH
Creative Concept:
Christiane Luhmann
www.luhmannandfriends.com

**Photos:**
Tim Luhmann Fotografie & Film
iStockphoto.com

**Print:**
Bösmann Medien und Druck GmbH & Co.KG

**Copyright:**
PTR HARTMANN GmbH
subject to change, 09/2019

This catalogue replaces all earlier editions.

## FSC® (Forest Stewardship Council®) | Climate neutral

FSC
www.fsc.org
MIX
Paper from responsible sources
FSC® C109521

The promotion of an environmentally friendly, socially beneficial and economically viable management of forests — this is the Forest Stewardship Council®'s (FSC®) mission.
The FSC's logo must only be used in conjunction with wood products which come from sustainable forest use or which conserve the forest's resources.

In this way, the FSC and its system of certification actively support sustainability when it comes to dealing responsibly with our natural resources.

PTR HARTMANN GmbH supports this mission, and has printed this catalogue in accordance with the guidelines of the FSC directive.

## Climate neutral

climate neutral
print
www.klima-druck.de
ID-No. 1982651
bvdm.

Carbon neutral printing means compensating for unavoidable carbon dioxide emissions by conserving them in other places when creating print media. The basis for this is an emissions balance which can be tracked in detail for the relevant print medium.
PTR HARTMANN's 2019 "Testing Technology" catalogue has been produced in accordance with this guideline. The ID number can be used to track the emissions balance.

L'IMPULSION Retrouvez nous sur www.limpulsion.fr

PTR HARTMANN

A Phoenix Mecano Company

## A COMPANY IN THE PHOENIX MECANO GROUP

The Phoenix Mecano Group is a technological enterprise which operates around the world and is represented on the international growth markets. With its three building technology, mechanical components and ELCOM / EMS divisions, the company is the leader in many markets. Machinery and plant engineering, measurement and control technology, electrical engineering, automotive and rail engineering, energy technology, medical technology, aerospace technology, as well as the home and hospital care sector, are important fields of application.

## GLOBAL PRESENCE

With more than 60 locations on every continent, we and our international workforce are close to our customers and guarantee efficient production, resource-friendly logistics and market-driven solutions.

**PTR HARTMANN GmbH**
Gewerbehof 38
59368 Werne, Germany
Phone +49 2389 7988-0
Fax +49 2389 7988-88
info@ptr-hartmann.com

**www.ptr-hartmann.com**

L'IMPULSION Retrouvez nous sur www.limpulsion.fr