L'IMPULSION
Retrouvez nous sur
www.limpulsion.fr

RF Coaxial connectors

General catalogue

Edition 2020



HUBER+SUHNER
Excellence in Connectivity Solutions

Improve your reliability

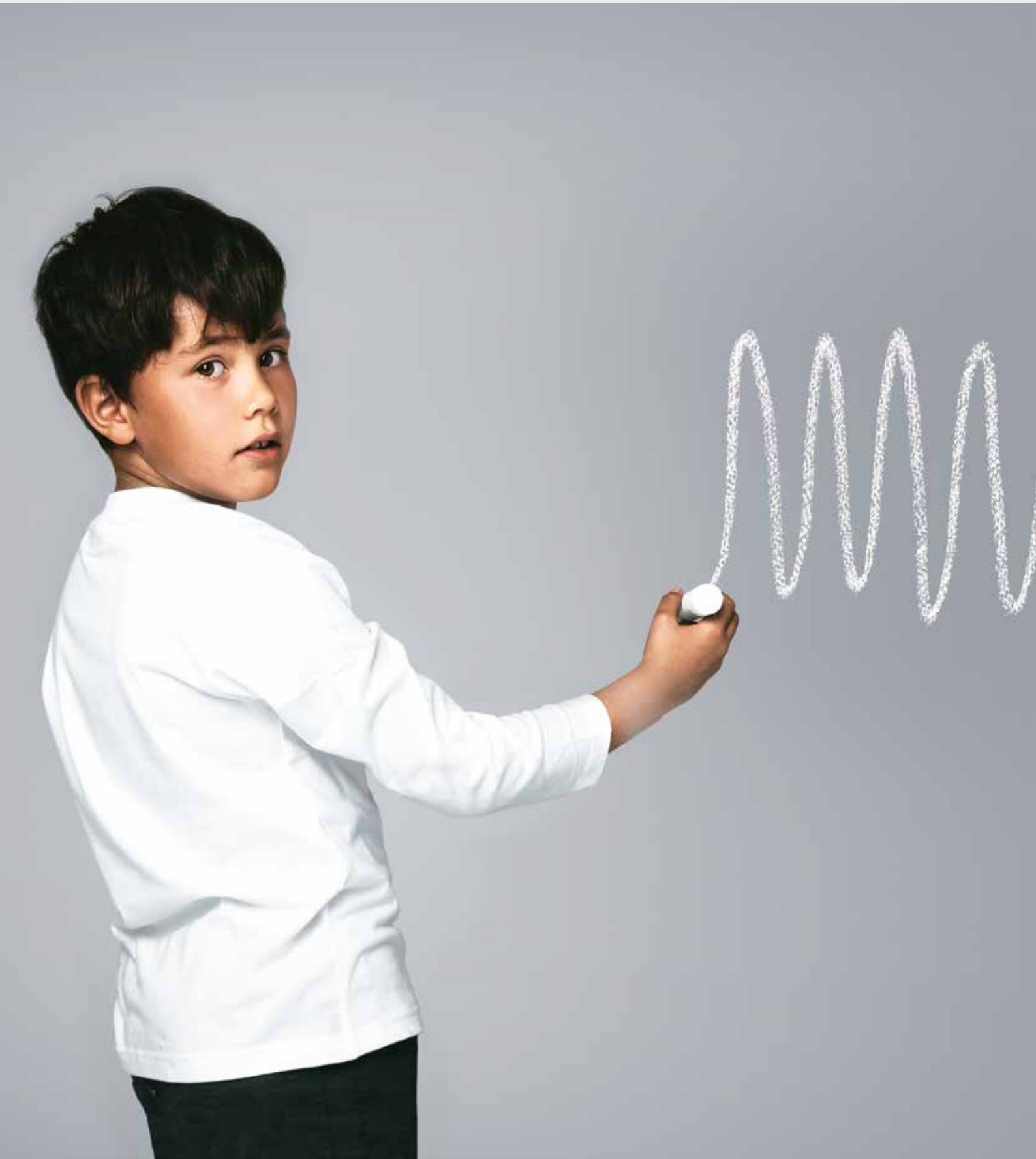

L'IMPULSION
Retrouvez nous sur
www.limpulsion.fr



Your partner for system solutions

HUBER+SUHNER is a leading international producer and supplier of electrical and optical interconnectivity components and systems. Core capabilities in radio frequency, fiber optic and low frequency technology are united under a single roof. The success of the company's high-grade standard products and customised applications based on its cutting-edge know-how in radio frequency and microwave technology, supported by advanced simulation processes.

RF coaxial connectors

HUBER+SUHNER offers a wide range of RF connectors for various applications. The products are used in markets like communication, medical, space, defense and other industries. The product portfolio is being constantly refined. New market trends and customer requirements drive product developments such as MFBX, NEX10, MXPM. Additionally HUBER+SUHNER supports its customers worldwide with application engineers, helping the customers in selecting the right product for each specific application.

HUBER+SUHNER
Excellence in Connectivity Solutions

L'IMPULSION | Retrouvez nous sur www.limpulsion.fr

Content

General information	6
Cables	31
AS12, AS16	43
MBX, MBX 2nd generation, MFBX, MMBX	57
SMP, SMPM, SMPM-T	85
MMCX, MCX 50, MCX 75, MMPX	113
SMB, SMC	153
NEX10, SSMA, SMA, PC 3.5, SK (2.92 mm standard), PC 1.85	171
1.0/2.3, QLA	239
BMA	251
QMA, XQMA, QN, XQN	263
BNC 50, BNC 75, real BNC 75	293
TNC 50, TNC 75	329
SHV, MHV	351
N 50, N 75, 4.3-10, 7/16	363
Quick-Fit	427
Reverse polarity connectors	449
MXP50, MXP40, MXP18	457
Adaptors	485
Appendix with assembly tools, accessories, mounting holes	531

HUBER+SUHNER
Excellence in Connectivity Solutions

L'IMPULSION Retrouvez nous sur www.limpulsion.fr

General information

Series not mentioned in this catalogue

For several reasons, only the most popular HUBER+SUHNER connector series and the appropriate connectors are mentioned in this catalogue. Connectors series such as BNO, BNT, C, UHF, PC 7 etc. belong to the extended product range.

The selection within these series however is rather limited. For more information please go to our website www.hubersuhner.com or contact our subsidiary or agent in your country.

Series	Coupling mechanism	Frequency range (GHz)	Interface standard
PC 7 (sexless) mid size precision coaxial connector	screw-on	DC to 18	- IEC 457-2 - IEEE Std. 287
PC 2.4 subminiature precision coaxial connector	screw-on	DC to 50	- IEC 61169-40
BNO twinaxial connector	bayonet	DC to 0.2	- IEC 60169-22
BNT triaxial connector	bayonet	DC to 3	
C mid size coaxial connector	bayonet	DC to 11	- MIL-STD-348/302
UHF mid size coaxial connector	screw	DC to 0.2	- IEC 60169-12

Services and support

Non standard connectors

Although our standard assortment is broad and miscellaneous, there are customer requirements which need a special solution. Thanks to capabilities and years of experience, HUBER+SUHNER is the ideal partner when customized solutions are demanded.

3D files

For the exchange of CAD models between various CAD systems, HUBER+SUHNER is providing the customers with 3D files in IGS or STEP data format.

Simulations/PCB layouts

HUBER+SUHNER has the ability and the tools for computer simulation of customer specific printed circuit board layouts.

Engineering notes, glossary, etc.

Since there is a RF connector guide available from HUBER+SUHNER, we deal with connector specific data only in this catalogue. We do not go into details regarding engineering notes or glossary etc. If you want to know more about RF connectors, please order the HUBER+SUHNER RF connector guide, english or german version available or refer to the webpage hubersuhner.com.

Definition and type codes

HUBER+SUHNER part number

11_BNC-( )50-3-4/XYZ (1 2)

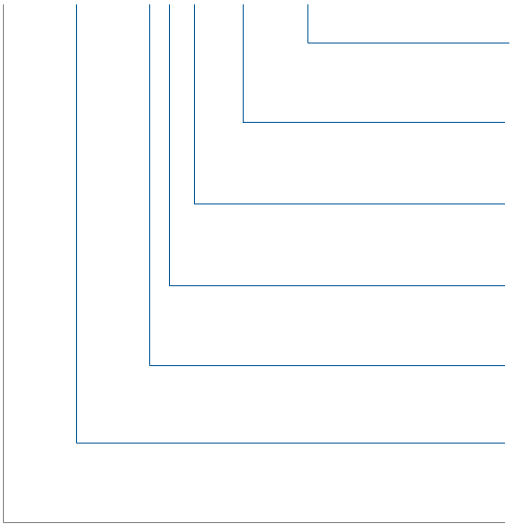

Additonal code for plating 1 and packing 2.

Plating code (X = center contact, Y = outer contact, Z = housing or other metal parts)

Type variation (continuous)

Cable dielectric size, rounded to the nearest mm

Impedance/( ) → extension for special attribute (see legend below)

Connector series

Connector pattern

Examples:
82_MMCX-**S**50-0-51/111_**NH**
82_MMCX-**S**50-0-51/111_**NY**

S	=	SMT (surface mount)
N	=	nickel underplating
H	=	packing (bulk, 100 pcs.)
Y	=	variable industrial packing (quantity depending on size of connector type)

Legend

Plating code (XYZ)

0	=	silver
1	=	gold or SUCOPRO®
2	=	nickel
3	=	SUCOPLATE®
4	=	chromium
5	=	tin plated
9	=	stainless steel

Additional code for plating 1

N	=	gold plating, nickel underplated
U	=	gold plating, not nickel underplated

Additional code for packaging 2

E	=	single packaging
F	=	bulk with 50 pieces
G	=	tape and reel with 750 pieces
H	=	bulk with 100 pieces
L	=	tape and reel with 1500 pieces
M	=	tape and reel (quantity depending on size of connector)
Y	=	variable industrial packing

Extension for special attribute: ( )

L	=	left run thread
Q	=	quick-mate
R	=	reverse sex
S	=	surface mount (SMT)
T	=	reverse sex surface mount (SMT)
U	=	unusual types (deviation form standard interface)
Z	=	zinc die casting

L'IMPULSION
Retrouvez nous sur
www.limpulsion.fr

Connector patterns

Definition of plug and jack

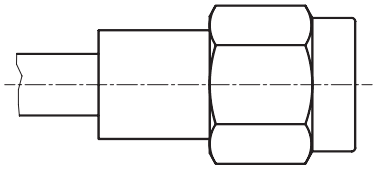

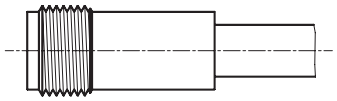

Plug
A plug is a connector featuring the active part of the coupling mechanism (for example coupling nut).

Jack
A jack is a connector featuring the coupling mechanism complementary to the plug.

Patterns

10...	Right angle panel cable plug (male), flange mount	11...	Straight cable plug (male)	12...	Straight bulkhead receptacle, plug (male)
	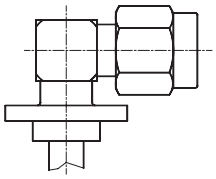		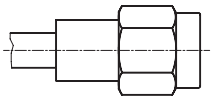		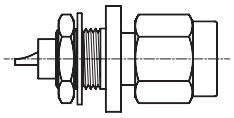
13...	Straight panel receptacle, plug (male), flange mount	14...	Straight bulkhead cable plug (male)	15...	Straight panel cable plug (male)
	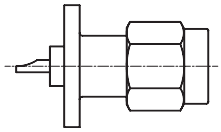		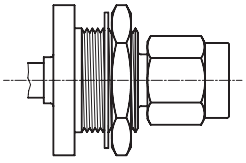		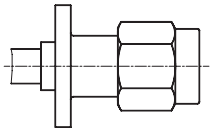

Connector patterns

16...	Right angle cable plug (male)	17...	Right angle bulkhead receptacle, plug (male)	18...	Right angle panel receptacle, plug (male), flange mount
	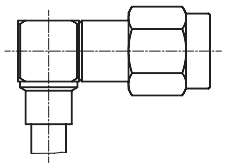		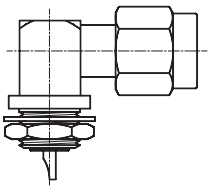		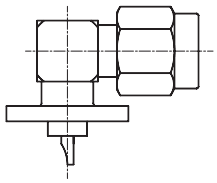
19...	Right angle bulkhead cable plug (male)				
	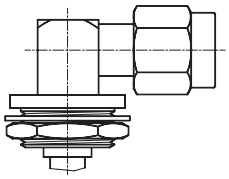				
20...	Right angle panel cable jack (female), flange mount	21...	Straight cable jack (female)	22...	Straight bulkhead receptacle, jack (female)
	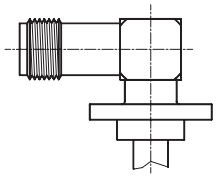		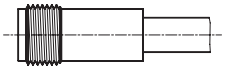		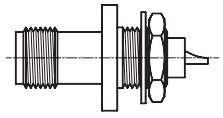
23...	Straight panel receptacle, jack (female), flange mount	24...	Straight panel bulkhead cable jack (female)	25...	Straight panel cable jack (female), flange mount
	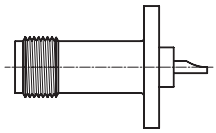		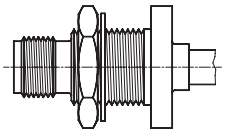		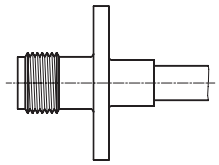
26...	Right angle cable jack (female)	27...	Right angle bulkhead receptacle, jack (female)	28...	Right angle panel receptacle, jack (female), flange mount
	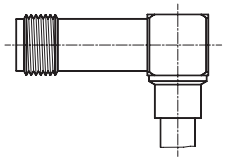		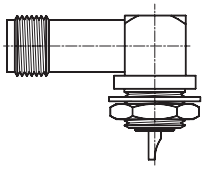		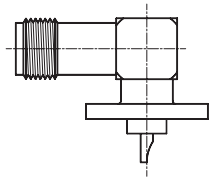

L'IMPULSION Retrouvez nous sur www.limpulsion.fr

Connector patterns

29...	Right angle bulkhead cable jack (female)				
	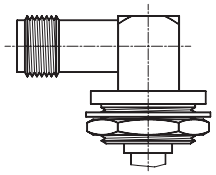				
31...	Adaptor jack/jack (female/female)	32...	Adaptor plug/plug (male/male)	33...	Adaptor plug/jack (male/female)
	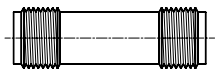		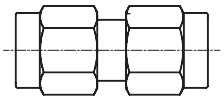		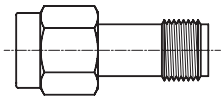
34...	Bulkhead adaptor jack/jack (female/female)	35...	Bulkhead adaptor plug/plug (male/male)	36...	Bulkhead adaptor plug/jack (male/female)
	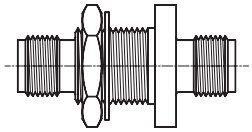		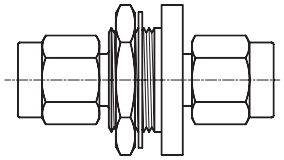		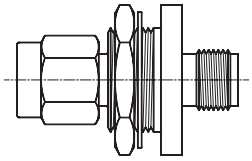
37...	Panel adaptor jack/jack (female/female), flange mount	38...	Panel adaptor plug/plug (male/male), flange mount	39...	Panel adaptor plug/jack (male/female), flange mount
	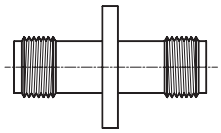		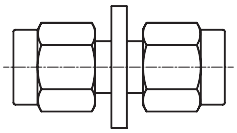		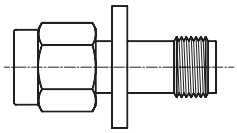
41...	T-adaptor, 3 plugs (male)	42...	T-adaptor, 2 plugs (male), 1 jack (female), asymmetric	43...	T-adaptor, 2 jacks (female), 1 plug (male)
	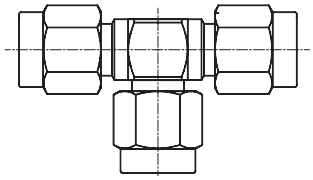		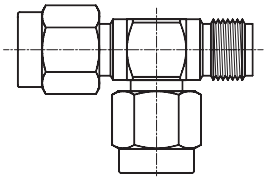		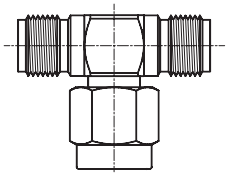

Connector patterns

44...	T-adaptor, 2 plugs (male), 1 jack (female)	45...	T-adaptor, 1 plug (male), 2 jacks (female), asymmetric	46...	T-adaptor, 3 jacks (female)
	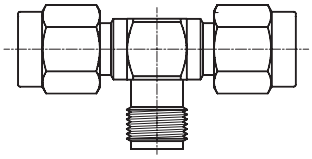		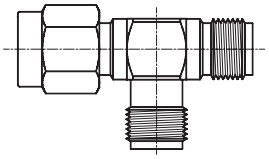		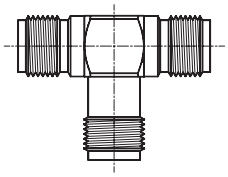
47...	T-cable junction				
	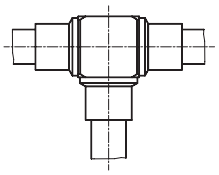				
51...	L-adaptor jack/jack (female/female)	52...	L-adaptor plug/plug (male/male)	53..	L-adaptor plug/jack (male/female)
	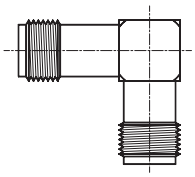		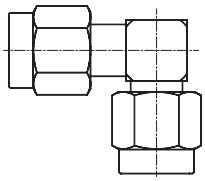		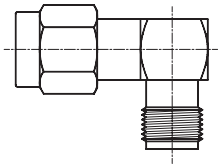
54...	Bulkhead-L-adaptor jack/jack (female/female)	55...	Bulkhead-L-adaptor plug/ plug (male/male)	56...	Bulkhead-L-adaptor plug/jack (male/female)
	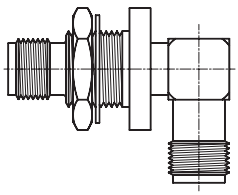		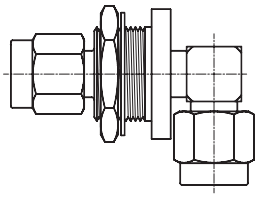		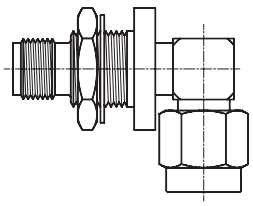
57...	Panel L-adaptor jack/jack (female/ female), flange mount	58...	Panel L-adaptor plug/plug (male/male), flange mount	59...	Panel L-adaptor plug/jack (male/female), flange mount
	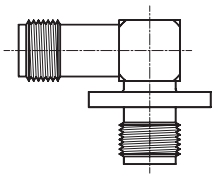		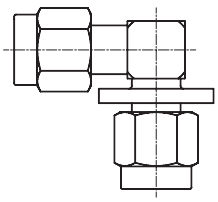		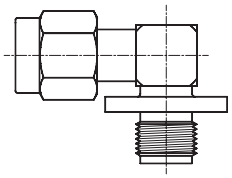

L'IMPULSION Retrouvez nous sur www.limpulsion.fr

Connector patterns

61...	Protective cap for plug (male)	62..	Protective cap for jack (female)	63...	Shorting jack (female)
	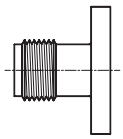		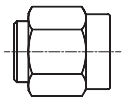		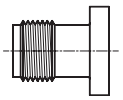
64...	Shorting plug (male)	65...	Termination	71...	Straight bulkhead cable feed through
	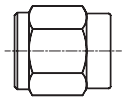		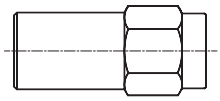		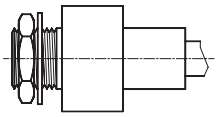
80...	PCB T-cable junction	81...	Straight PCB plug (male)	82...	Straight PCB jack (female)
	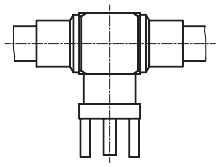		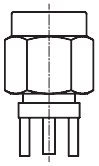		
83...	Straight PCB cable terminator	84...	Right angle PCB plug (male)	85...	Right angle PCB jack (female)
	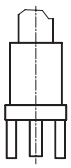		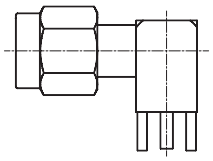		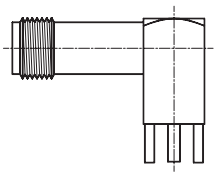
86...	Right angle PCB cable terminator	87...	PCB T-adaptor jack/jack (female/female)	88...	PCB T-adaptor plug/plug (male/male)
	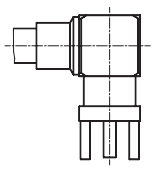		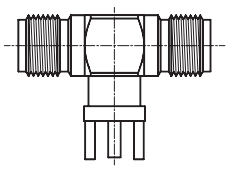		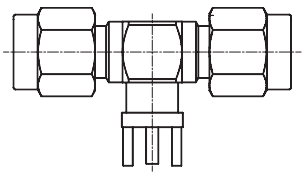

Connector patterns

89...	PCB T-adaptor plug/jack (male/female)				
	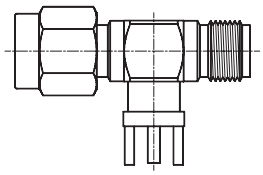				
90...	Combi-print-connector	91...	Edge mount PCB plug (male)	92..	Edge mount PCB jack (female)
	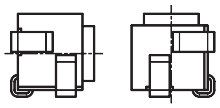		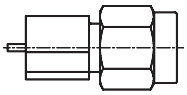		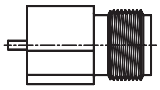
93...	Right angle PCB plug with ground pin in-hole and SMT signal pin (male)	94...	Right angle PCB jack with ground pin in-hole and SMT signal pin (female)	95...	Straight PCB plug with ground pin in-hole and SMT signal pin (male)
	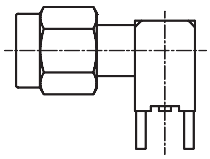		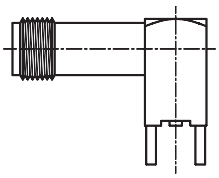		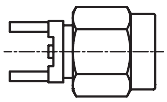
96...	Straight PCB jack with ground pin in-hole and SMT signal pin (female)				
	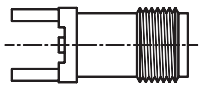				

L'IMPULSION
Retrouvez nous sur
www.limpulsion.fr

Selecting connector, plating and packaging

How to select the suitable coaxial connector series

Technical elements

Frequency, cable type, impedance and coupling mechanism are key factors to consider in selecting a coaxial connector series. Depending on the application, other factors such as sealing, temperature, working voltage, IM performance, vibration etc. also have to be taken into account.
Connectors must, at a minimum, provide the same level of performance as the cable or the application to which they are attached. This means, before selecting a connector series the cable type or the application has to be known. Its structure, dimensions and frequency range restrain the connector series that can be used.

The table below shows the different cable structures and the suitable connector series.

Cable structure	Suitable connector series
Coaxial cables	BMA, BNC, C, DIN 1.0/2.3, DIN 7/16, MBX, MCX, MMBX, MMCX, MMPX, MXP, MXPM, N, NEX10, PC 1.85, PC 2.4, PC 3.5, QLA, QMA, QN, SK, SMA, SMB, SMC, SMPM, SMPM-T, SMP, SSMA, TNC, UHF, 4.3-10
Balanced twin cables	BNO
Triaxial cables	BNT
High voltage (coaxial cables)	MHV (H4), SHV
Board to board	MBX, MFBX, MMBX

Cut-off frequency as well as coupling mechanism of a connector series limit the frequency range that a connector can operate. The following table shows the frequency range of different connector series within this catalogue.

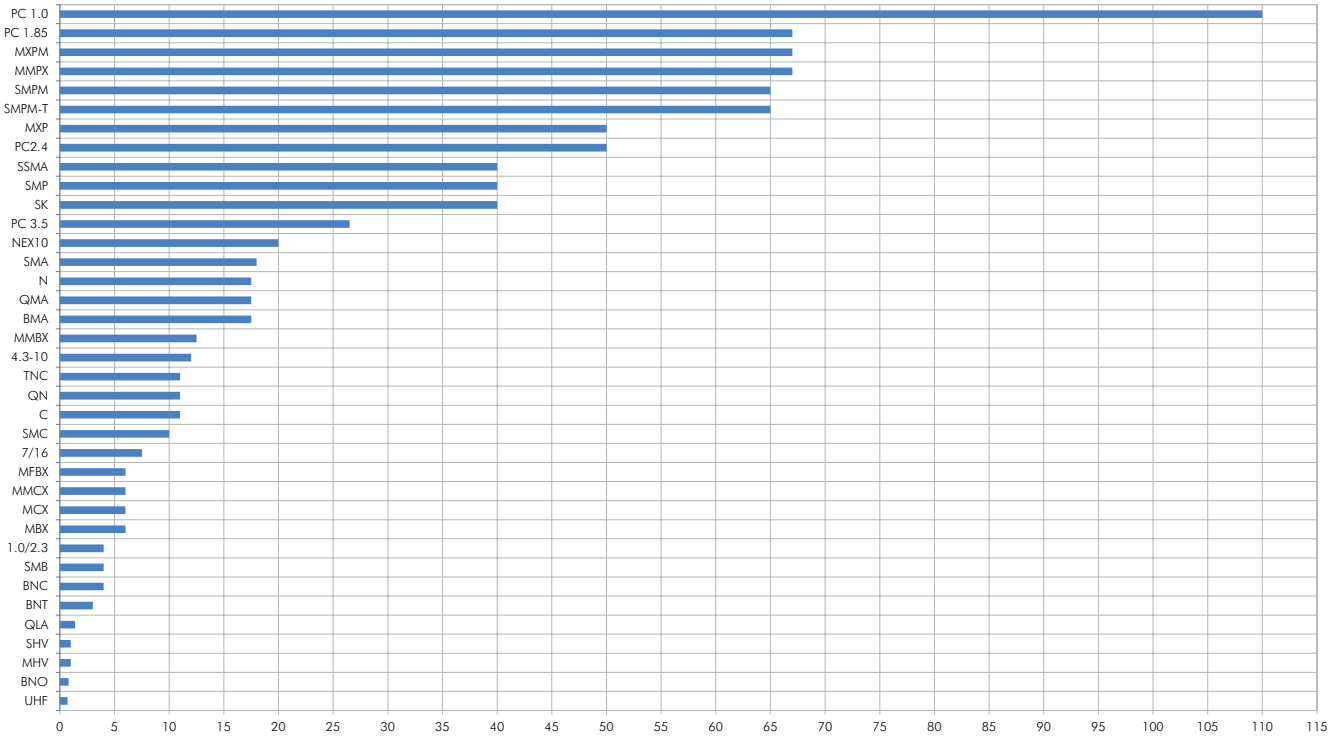

Coupling mechanisms

Coupling mechanisms make it possible to mate connector pairs and also determine whether or not the mated pair can meet the specified mechanical and electrical characteristics, such as operating frequency.

The following four types of mechanisms are commonly used for the series described in this catalogue.

Screwed coupling mechanism

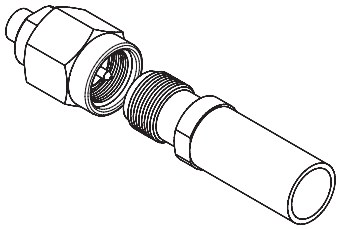

The coupling mechanism consists of a thread and a coupling nut. Special attention must be paid to the maximum torque permitted and the coupling nut captivation.

The screwed connection is used in series like SMC, SSMA, SMA, TNC, N and 7/16 because the mechanism guarantees the most solid, stationary coupling suited for e.g. test and measurement, military and telecoms applications.

Bayonet coupling mechanism

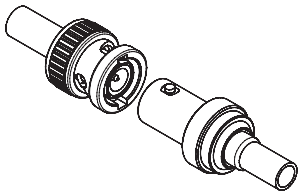

The bayonet coupling is a twist-snap connection.
The coupling mechanism is best known through the BNC.

The bayonet connection often is chosen as coupling when it is important to have a sturdy mechanism and at the same time fast mating. Therefore, the mechanism is reliable for test and measurement applications as well as military systems. Used in the series BNC, BNO, BNT, SHV and MHV.

Snap-on coupling mechanism

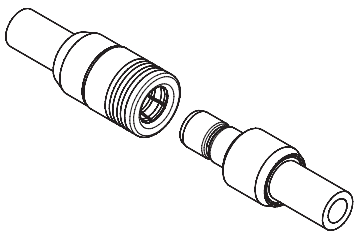

The snap mechanism is commonly used for connectors with small mechanical dimensions and high packing density. Because this type of connection is easy to use, it is often designed into PCB applications.

The main feature of the snap-on mechanism is that the engagement and disengagement action can be completed extremely quickly. This mechanism is very reliable when used for small connectors such as MMCX, MMPX, MCX and SMB series.

L'IMPULSION Retrouvez nous sur www.limpulsion.fr

Coupling mechanisms

Quick Lock coupling mechanism

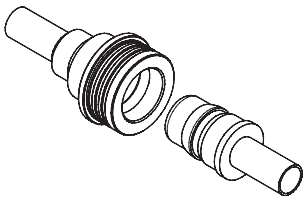

A Quick Lock coupling mechanism is basically a snap-on interface with additional self-locking.
Demating is performed by retracting the unlock-sleeve of the male connector.

Quick-Lock connectors prevent unintentional loosening of mated pairs and they provide a fast and reliable interconnection. The QMA and QN connector interface feature this time saving locking mechanism.

Slide-on coupling mechanism

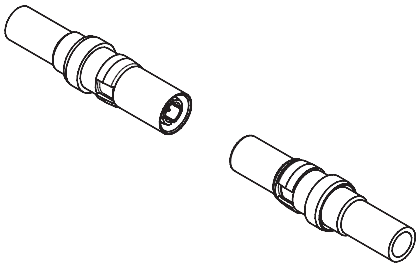

The slide mechanism is used extensively where a high packing density and easy handling is needed. A typical application is the interconnection of daughter boards to mother boards.

This mechanism is often used for various DIN-multiport connectors and also with connectors such as BMA, MMBX or DIN 1.0/2.3 which are commonly attached to PCBs.

Coupling mechanism	Connector series
Bayonet	BNC, BNO, BNT, MHV (H4), SHV
Quick-Lock	QMA, QN, 4.3-10, NEX10
Threaded	DIN 4.1/9.5, DIN 7/16, 4.3-10, N, PC 1.85, PC 2.4, PC 3.5, SK (2.92 mm standard), SSMA, SMA, SMC, TNC, SMPM-T, NEX10
Snap-on	MCX, MMCX, MMPX, QLA, SMB, SMPX, SMP, SMPM
Slide-on	BMA, DIN 1.0/2.3, MBX, MMBX, MXP

Overview coupling mechanisms

L'IMPULSION
Retrouvez nous sur
www.limpulsion.fr

Plating information

HUBER+SUHNER is your plating technology specialist and your competent partner for developing and applying proper coatings for specific uses and conditions. This section explains the metallic plating used for the different HUBER+SUHNER connectors.

Plating is required for different reasons:
- Add conductive material to supply sufficient current carrying capacity (good electrical and thermal conductivity)
- Diminish or eliminate surface oxidation/corrosion and provide
  protective coating over conductors
- Ensure good contact between conductors
- Achieve a good solder or weld attachment surface
- Obtain a better wear resistance (abrasion resistance and hardness)

Our main platings are
- Gold
- Silver
- SUCOPLATE® (HUBER+SUHNER plating)
- SUCOPRO® (HUBER+SUHNER plating)



L'IMPULSION Retrouvez nous sur www.limpulsion.fr

Plating information

Gold

Gold is a precious metal available either as soft fine gold or as hard version. It is a good heat and electricity conductor and unaffected by air and most reagents, which makes it a superb material for electrical signal transmission. Gold can be deposited on nickel or copper. It is quite expensive compared to other plating materials.

Application

The primary use of gold in RF applications is for plating. Inner conductors are frequently gold-plated when e.g. good conductivity, excellent oxidation resistance and continuous mating (repeatibility) are required (e.g. in defence applications). Even in highly pollluted atmospheres, a gold surface will be free of oxide. Gold plating is available according to MIL-DTL-45204 D or can be customer specific.

Gold offers the following main advantages:

- Excellent wettability/solderability
- Excellent protection against corrosion
- Low contact resistance
- Good wear resistance

Colour: gold

L'IMPULSION
Retrouvez nous sur
www.limpulsion.fr

Plating information

SUCOPRO® – the gold plating for the future

SUCOPRO is a thin gold plating developed by HUBER+SUHNER, featuring a nickel-phosphorus alloy (10.5 to 15 %) underlayer.

Below 300 °C the NiP is amorphous and non-magnetic. The gold layer – which is not subject to oxidation itself – protects the nickel-phosphorus underlayer against oxidation, thus allowing good wetting while soldering. It provides stable, low contact resistance and improved protection against oxidation and corrosion. As it contains only a thin layer of gold, the solder joints will not become brittle.

The nickel-phosphorus layer provides very good corrosion resistance, highwear resistance and hardness, and a diffusion barrier against gold, copper, tin and zinc. Between 300 °C and 500 °C, it changes its structure to microcrystalline and its hardness increases, but no brittleness or weak adhesion occurs.

Application

Initially, SUCOPRO was developed for piece parts which demand an excellent solderability and/or wear resistance, that is PCB connectors and adaptors. But more and more customers select this plating also for cable connectors, adaptors, on bodies and centre contacts. Meanwhile, SUCOPRO is an excellent plating for almost all subminiature connectors.

SUCOPRO plating offers the following main advantages:

- Excellent wear resistance for more than 1000 mating cycles
- Non-magnetic
- Excellent corrosion resistance
- Excellent wettability/solderability
- Very high strength of soldered joints without embrittlement
- Low contact resistance
- Good passive intermodulation properties

Colour: gold



L'IMPULSION Retrouvez nous sur www.limpulsion.fr

Plating information

SUCOPLATE®

As one of the leading RF connector manufacturers, HUBER+SUHNER has delivered several hundred million coaxial connectors with SUCOPLATE plating to demanding customers worldwide. These components, featuring unique mechanical and electrical properties, are used in a wide range of applications such as off-shore, airframes, space, test+measurement, telecommunications and wireless.

SUCOPLATE is a copper alloy composed of three components: copper, tin and zinc. Being non-magnetic and nonallergic (nickel-free), SUCOPLATE is an attractive alternative to nickel plating. It has a good electrical performance and corrosion resistance. The non-magnetic property in the contact area is also important for obtaining negligible passive intermodulation products (PIM) in communication systems such as base transceiver stations.

SUCOPLATE offers the following important performance highlights:

- Superior electrical conductivity and low contact resistance
- Non-magnetic
- Excellent passive intermodulation properties
- Uniform plating thickness
- High wear resistance
- Low surface friction
- Excellent adhesion and ductility (no cracking when bending parts)
- Tarnish resistant
- High corrosion resistance
- Nonallergic

Colour: similar to stainless steel

L'IMPULSION
Retrouvez nous sur
www.limpulsion.fr

Plating information

Silver

Silver has excellent electrical and thermal conductivity which makes it very suitable for plating. It is cheaper than gold. Having the best conductivity of all metals this metal can carry a high current load with the least loss. Silver is particularly advantageous when a low passive intermodulation product is desired.

Other features of silver are that it is easily shaped, provides very good heat conductivity, good corrosion resistance in air and water and the lowest contact resistance. A disadvantage is that silver tarnishes (sulfide film on the surface) when exposed to ozone, hydrogen sulfide and sulphur. Tarnishing influences the appearance but does not have any impact on the electrical performance.

Application

Silver is the standard plating for connector bodies and center contact of 7/16 connectors. Traditionally, silver plating is well-known as a very good plating for low passive intermodulation components. Thanks to its good solderability, silver is used for soldering ferrules and cable entries.

Silver offers the following main advantages:

- Excellent electrical conductivity
- Good corrosion resistance
- Low contact resistance
- Good solderability
- Excellent passive intermodulation properties

Colour: silver

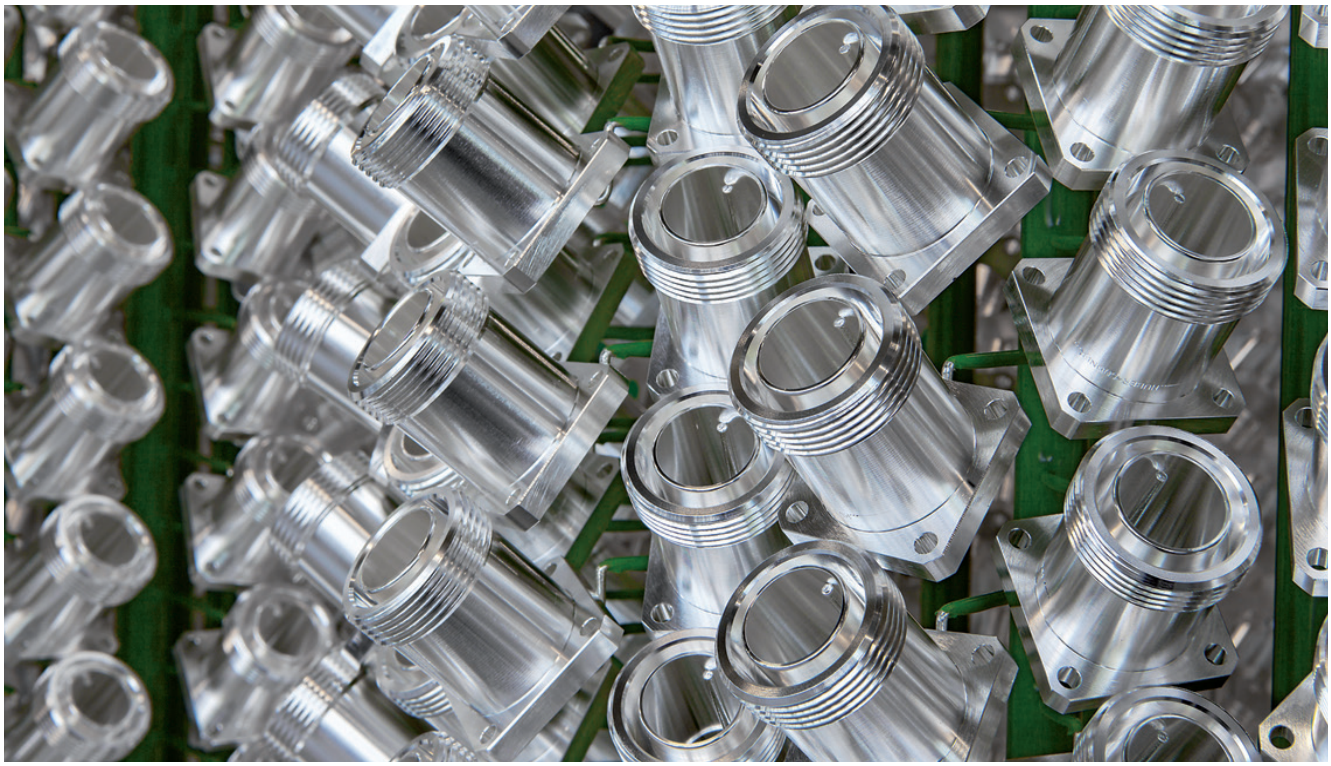

L'IMPULSION Retrouvez nous sur www.limpulsion.fr

Packaging information

HUBER+SUHNER attaches great importance to high quality, economic packaging. This section will give you an overview of the types and packaging materials used. All our packagings have to fulfill the following functions:

- Protection of the connectors against mechanical stress, humidity and dust during storage transport and usage
- Identification and information about the product
- Easy handling for production
- Economic and useful recycling after use

All packagings fulfill the specification according to ISO 14000. For further information please contact your local HUBER+SUHNER representative.

Single and bulk packaging

Plastic bags from HUBER+SUHNER are sealed by welding or provided with a mini-grip closure (bulk only) for reclosing after use. They are easy to handle and are marked for recycling with the material recycling symbol according to the recommended international DIN standard. For product identification and retraceability, they are labelled with the type version and the order, batch and assembly instruction numbers.



Single (sealed by welding)



Bulk (mini-grip)

Material

- LDPE or PP, transparent

Attributes

- Electrostatically conductive,
- Air-tight
- Chemically resistant
- Chlorine free
- Halogen free

Packaging information

Tape and reel packaging

The main benefit of tape and reel packaging is the possibility of using an automtic PCB assembling process for the connector. This enables to reduce the cost of the whole manufacturing and protects the connectors during transportation and processing. Our tape and reel packaging meets the international standards EIA 481 and DIN IEC 286-3. The fully automated packaging machine provides perfect packaging quality.

Material

• Reel	polystyrene (PS)	(anti-static)
• Carrier tape	polystyrene (PS) or polycarbonte (PC)	(anti-static)
• Carrier tape	polystyrene (PS) or polyethylene terephthalate (PET)	(anti-static)
• Box	cardboard	

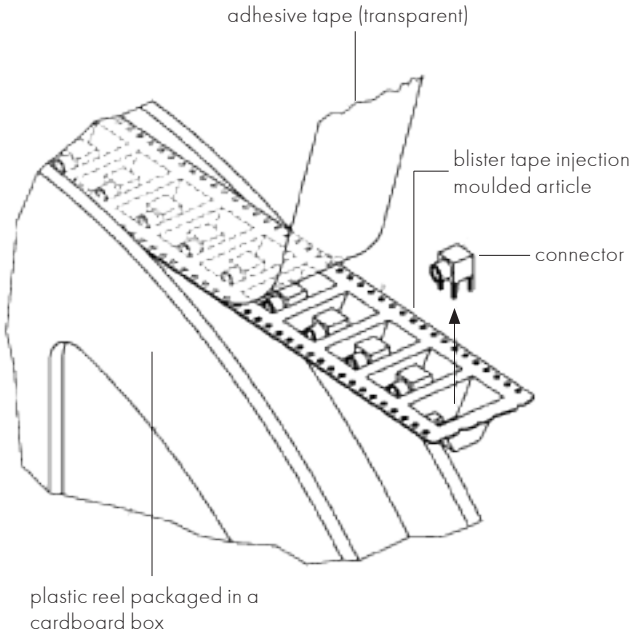



Type of packaging	Bulk	Single	Tape and reel	Notes
Cable connectors	x	x		• Standard for high volumes • Standard depending on connector size
Flange connectors	x	x		• Standard for high volumes • Standard depending on connector size
PCB connectors	x		x	• Small quantities • Standard for high volumes with automatic processing
Adaptors		x		• Standard • Other packaging on request

L'IMPULSION Retrouvez nous sur www.limpulsion.fr

Cable entry variants

Cable entries for flexible cables

HUBER+SUHNER full crimp

Full crimp connectors with crimped centre and outer contacts allow quick and simple assembly with high reliability.
The example below shows the three steps which are necessary to crimp a subminiature SMC connector.

1		Full crimp connectors are normally supplied in three parts: centre contact, body and crimp ferrule.
2	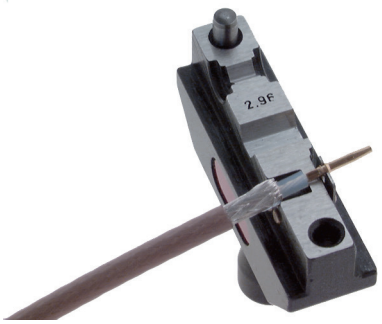	During crimping, the centre contact is accurately positioned in the crimp insert.
3		The pre-assembled cable is pushed into the body. Due to a snap mechanism between center contact and insulator, center contact is captivated and protected against axial displacement.
4	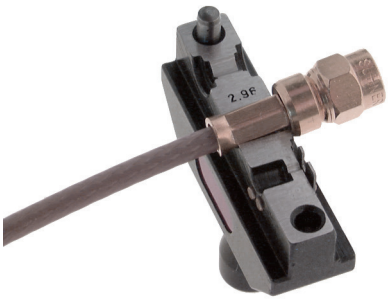	The final operation is crimping of the crimp ferrule.

Cable entry variants

Cable entry crimp 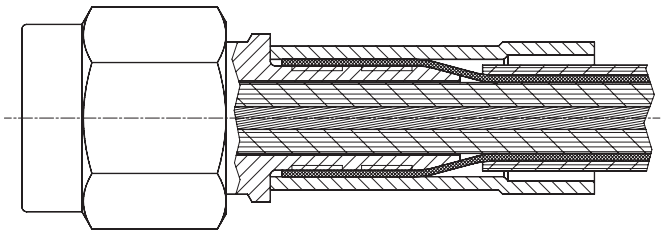	The centre contact is soldered and the cable braid is crimped to the connector body. The crimp technique enables an economic assembling of high reliability. Suitable taper sleeves are available; see page 554.
Cable entry clamp 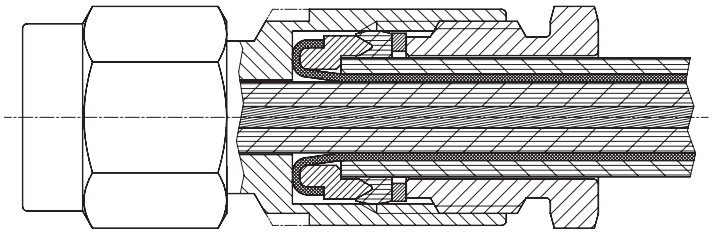	The clamp type cable entry is recommended for weather-exposed applications. The cable jacket is secured by a rubber gasket and the cable screen by an axially tightened press ring.
Cable entries for semi-rigid cables Soldered, with pin and insulator 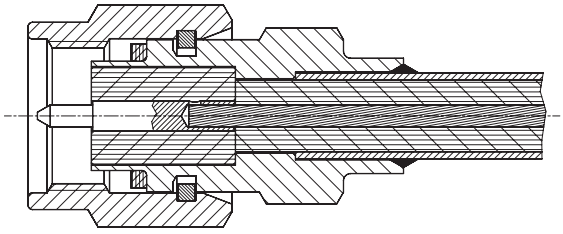	Centre contact and body of the connector are soldered onto the centre or outer conductor of the cable.

L'IMPULSION Retrouvez nous sur www.limpulsion.fr

Cable entry variants

Soldered, without pin and insulator (SMA for semi-rigid cable 0.141″)

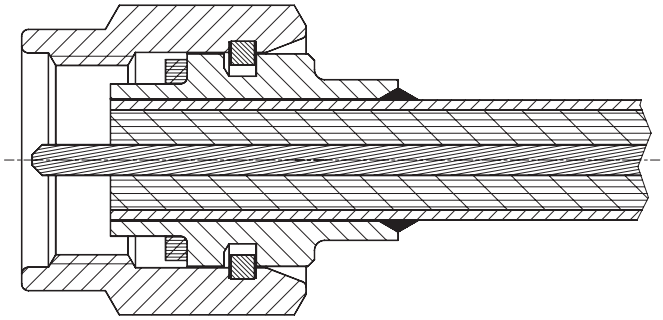

Pin and insulator are formed directly by the cable. The body is soldered to the copper jacket. This design features a very low reflection coefficient, short length, low cost and ease of assembly. Recommended for connections which must not be undone frequently, moisture-sealed.

Solderless cable entry, clamp cone

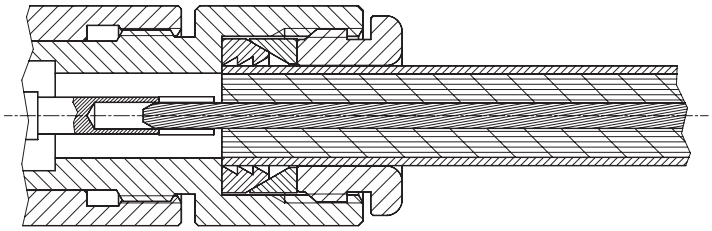

Specially for assembly of large size semi-rigid cables. The copper jacket of the cable is held by a clamp cone.

Cable entry for corrugated copper tube cables

HUBER+SUHNER Quick-Fit (e.g. for 7/8″ cable)

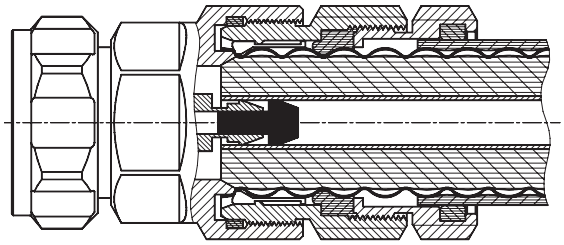

Humidity-proof cable entry for RF cables with corrugated copper tube. The cable entries support standard foam dielectric cables 1/2″, 7/8″, 1_1/4″ and 1_5/8″ and 1/4″, 3/8″ and 1/2″ highflex Sucofeed as well as the equivalent products of Andrew, RFS, NK cables.

Features

- Low, stable and reproducible PIM (Passive Intermodulation Product)
- Quick and easy assembly
- Competitive pricing
- IP rating (IP68 for Quick-Fit connector types)
- Cable multi-brand compatibility

IP ratings

The IP rating system provides a means of classifying the degree of protection from dust and water afforded by electrical equipment and enclosures.

The system is recognised in most countries and is set out in a number of standards, including IEC 60529.

1st digit: protection against solid objects			2nd digit: protection against liquids		
IP x...		Description/test	IP ...y		Description/test
0		No protection	0		No protection
1		Protected against solid objects over 50 mm, e.g. accidental touch by hands	1		Protected against vertically falling drops of water
2		Protected against solid objects over 12.5 mm, e.g. fingers	2		Protected against direct sprays of water up to 15° from the vertical
3		Protected against solid objects over 2.5 mm (tools/wires)	3		Protected against sprays to 60° from the vertical
4		Protected against solid objects over 1 mm (tools/wires/small wires)	4	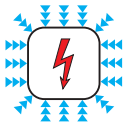	Protected against water sprayed from all directions – limited ingress permitted
5	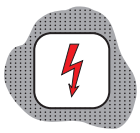	Protected against dust – limited ingress (no harmful deposit)	5	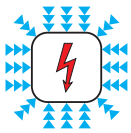	Protected against low pressure jets of water from all directions - limited ingress permitted
6		No ingress of dust	6	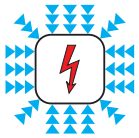	Protected against strong jets of water, e.g. for use on shipdecks – limited ingress permitted
			7	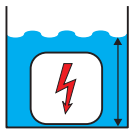	Protected against the effects of immersion between 15 cm and 1 m
Example IP67:		No ingress of dust and protected against the effects of immersion between 15 cm and 1 m.	8	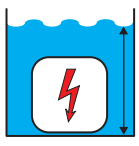	Protected against long periods of immersion under pressure

L'IMPULSION Retrouvez nous sur www.limpulsion.fr

Soldering

Soldering is an important technique in the assembly of electronic products. It is the process of joining two metals by the use of a solder alloy, and it is one of the oldest known joining techniques.

Good soldering quality as a prerequisite for reliable joints can be achieved only through a soldering process in which a great many variables both with respect to materials and to techniques have been optimised in a integrated system. The various mass-soldering processes all have their own particular characteristics. They differ in the way in which the solder flux and the solder alloy are applied to the parts to be joined and in the manner by which the heat is supplied. The following information describes the soldering methods. This information should be considered as a recommendation. Depending on the specific application, it is up to the user to select the most suitable method.

Item to be soldered		Usual methods
Centre conductor of coaxial cable		• Soldering iron • Resistance heating
Outer conductor of semi-rigid cable	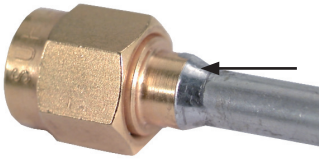	• Inductive (RF) • Soldering iron • Resistance heating
Connector for printed circuit board through-hole version	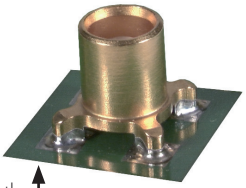 Soldered underneath PC-board	• Wave soldering • Reflow soldering • Soldering iron
Connector for printed circuit board surface-mount version	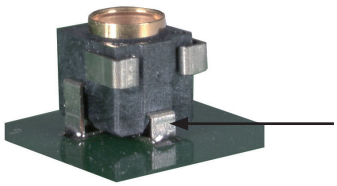	• Reflow soldering • Soldering iron
Connector with solder tab	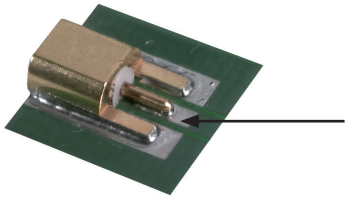	• Soldering iron • Reflow soldering

In addition to the soldering method, temperature and dwell time, parameters such as the flux, surface, material and geometry of the parts to be soldered must be taken into account.

L'IMPULSION
Retrouvez nous sur
www.limpulsion.fr

Soldering

Commonly used solder

Depending on components, soldering termperature etc., the following solders are used:

SnPb	63/37	183 °C lead solder
SnPb	60/40	188 °C lead solder
SnPbAg	62/36/2	179 °C lead solder
SnAgCu	96.5/3.0/0.5	217 °C leadfree solder
SnAg	96.5/3.5	221 °C leadfree solder

The higher melting temperature during leadfree soldering is critical for the cable stripping dimensions during assembly. The expansion of the cable dielectric will be larger.

How do you judge the quality of a solder joint?

A good (reliable) solder joint will, during the lifetime of the equipment in which the joint is situated, perform its mechanical and electrical functions without failures. Visual aspects of good soldered joints are:

1. Good wetting
2. Correct amount of solder
3. Sound and smooth surface

All soldered joints on a printed board should give a uniform impression regardless of their location on the printed board. Solder should flow evenly over the surfaces to be soldered and run out thinly towards the edges of the joint. The contact angle should be well under 30° if the surfaces are sufficiently large. Good wetting of both the component and the solder land with the correct amount of solder is so important that this is the major criterion in the assessment of soldered joints. The solder should wet the entire periphery of the termination to be soldered, and from the edge of the solder land the thickness of the solder coat should increase uniformly up to the termination. Leadfree solder joints have a different appearence from their tinlead counter parts.

- Grainy and less bright
- Larger wetting angle

L'IMPULSION
Retrouvez nous sur
www.limpulsion.fr



L'IMPULSION
Retrouvez nous sur
www.limpulsion.fr

Suitable cables

The HUBER+SUHNER coaxial connector portfolio covers a wide range of different cable types, such as flexible cables, semi-rigid cables, corrugated copper tube cables, etc.

Please find hereafter the dimensions and the material of all cables (cable groups) mentioned within this paper.

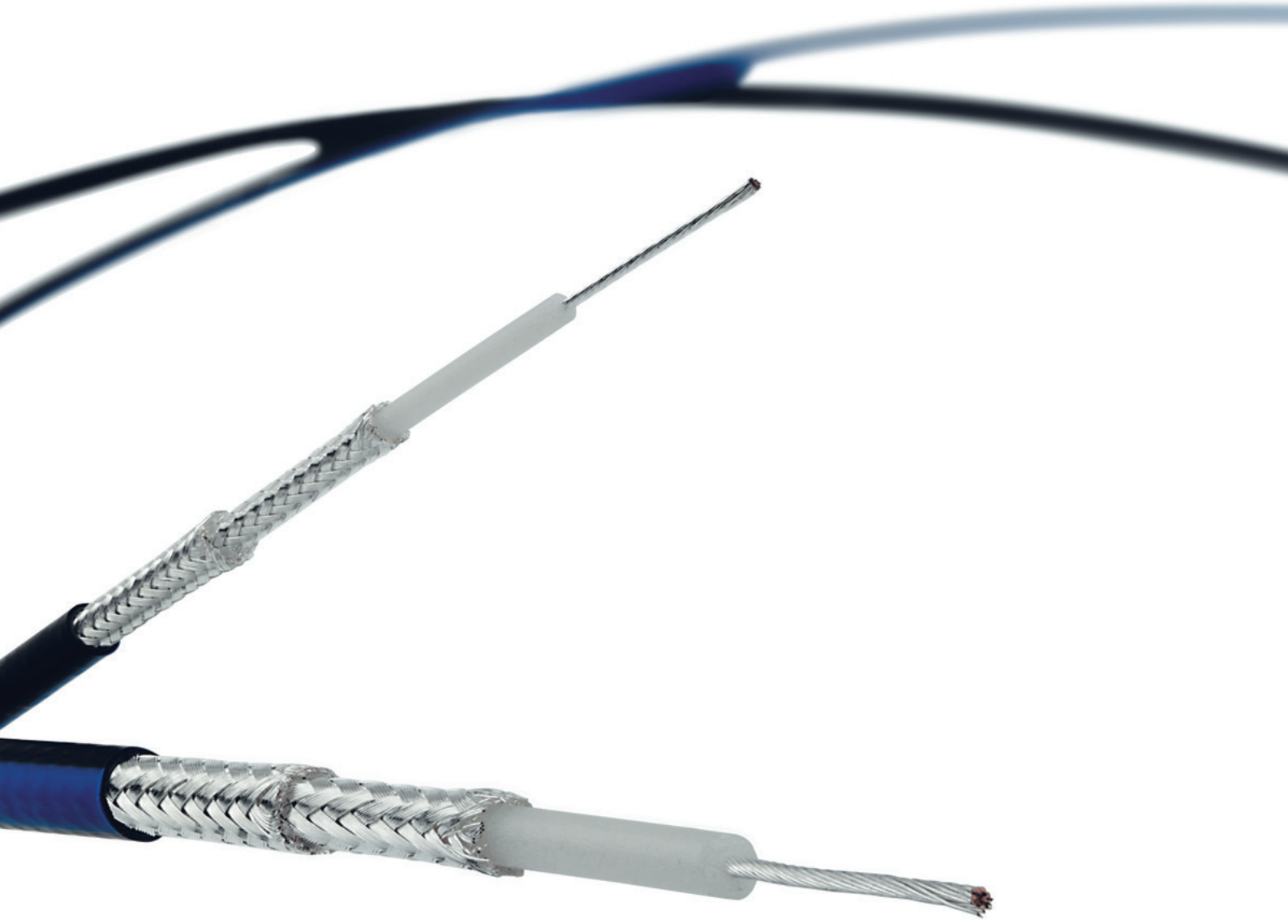

L'IMPULSION
Retrouvez nous sur
www.limpulsion.fr

Flexible RF cables

Foam line 50 Ω

Screen type	Cable group	Cable type	Centre conductor		Insulation	
			Material	Ø mm	Material	Ø mm
Double screen	S9	S_02162_B	Cu	0.80	SPE	2.10
Double screen	X27	SPUMA_195 SPUMA_195-FR-01	Cu Cu	0.94 0.94	SPE SPE	2.79 2.79
Double screen	X9	SX_04172_B-60	CuAg	1.40	SPE	3.83
Double screen	X28	SPUMA_240 SPUMA_240-FR-01	Cu Cu	1.42 1.42	SPE SPE	3.81 3.81
Double screen	X34	SPUMA_240-RS-FR	Cu	1.42	SPE	3.81
Double screen	S16	S_04262_D-09	CuAg	1.40	SPE	3.78
Double screen	S24	S_06162_D-03	Cu	2.05	SPE	5.60
Double screen	U30	SPUMA-400 SPUMA-400-FR-01	AlCu AlCu	2.74 2.74	SPE SPE	7.24 7.24
Double screen	X32	SPUMA-400-RS-FR	Cu	2.74	SPE	7.24
Multiple screen	S32	S_07262_BD	CuAg	2.85	SPE	7.35
Double screen	X31	SPUMA_500-FR-01	AlCu	3.58	SPE	9.40
Double screen	S39	S_10162_B-11 S_10172_B-11	AlCu AlCu	3.78 3.78	SPE SPE	9.75 9.75
Double screen	X29	SPUMA_600	AlCu	4.44	SPE	11.56

Foam line 75 Ω

Screen type	Cable group	Cable type	Centre conductor		Insulation	
			Material	Ø mm	Material	Ø mm
Single screen	U17	S_042633	Cu	0.83	SPE	3.70
Double screen	X33	SPUMA_400-FR-75	Cu	1.65	SPE	7.24

List of abbreviations

AL-PES	polyester aluminium
Cu	plain copper wire
CuAg	silvered copper wire
CuAl	aluminium wire, copper plated
CuSn	copper wire, tin plated
StCu	copper plated steel wire
StCuAg	silvered copper plated steel wire
FEP	fluorethylenepropylene
HDPE	high-density polyethylene
HL	semiconducting layer
LDPE	low-density polyethylene
LSFH	low smoke free halogene
PE	polyethylene
PEX	polyethylene, cross linked
PFA	perfluoralcoxy
PTFE	polytetrafluorethylene
PVC	polyvinylchloride
RADOX®	polyolefin, flame retardent
SPE	foam polyethylene
SPEX	foam polyethylene, cross linked

Screen		Jacket		Cable retention force *	Operating frequency range	Notes
Material	Ø mm	Material	Ø mm	N	GHz	
AL-PES(foil) CuSn(braid)	2.15 - 2.65	LSFH	3.15	56	6	
AL-PES(foil) CuSn(braid) AL-PES(foil) CuSn(braid)	2.95 - 3.53 2.95 - 3.53	PE LSFH	4.95 4.95	129 129	6 6	
AL-PES(foil) CuSn(braid)	4.2 - 4.6	RADOX®	5.5	128	6	
AL-PES(foil) CuSn(braid) AL-PES(foil) CuSn(braid)	3.96 - 4.52 3.96 - 4.52	PE LSFH	6.15 6.15	184 184	6 6	
AL-PES(foil) CuSn(braid)	3.96 - 4.52	TPU	6.15	184	6	
CuAg/CuAg	4.2 - 4.7	LSFH	5.70	228	6	
Cu/Cu	6.1 - 6.75	LSFH	7.90	441	6	
AL-PES(foil) CuSn(braid) AL-PES(foil) CuSn(braid)	7.40 - 8.15 7.40 - 8.15	PE LSFH	10.25 10.25	305 305	6 6	
AL-PES(foil) CuSn(braid)	7.40 - 8.15	TPU	10.25	305	6	
CuAg/Cu/CuSn	8.00 - 8.10 - 9.00	LSFH	10.80	661	3	*
AL-PES(foil) CuSn(braid)	9.55 - 10.36	LSFH	12.78	317	6	
Cu(foil)/Cu(braid) Cu(foil)/Cu(braid)	9.85 - 10.70 9.85 - 10.70	LSFH PE	12.90 12.90	317 317	7.5 7.5	
AL-PES(foil) CuSn(braid)	11.56 - 12.55	PE	14.99	317	6	

Screen		Jacket		Cable retention force *	Operating frequency range	Notes
Material	Ø mm	Material	Ø mm	N	GHz	
Cu	4.35	PVC	6.10	147	1	
AL-PES(foil) CuSn(braid)	7.40 - 8.15	LSFH	10.25	305	3	

* Value considers maximum load of the cables without irreversible variations of specifications.

L'IMPULSION
Retrouvez nous sur
www.limpulsion.fr

Flexible RF cables (continuing)

Performance line 50 Ω

Screen type	Cable group	Cable type	Centre conductor		Insulation	
			Material	Ø mm	Material	Ø mm
Single screen	U0	K_01152-07	CuAg	0.19	PFA	0.52
Single screen	U1	RG_178_B/U Enviroflex_178 RG_196_A/U	StCuAg StCuAg StCuAg	0.30 0.30 0.30	PTFE SPEX PTFE	0.83 0.82 0.83
Single screen	U2	RG_316_/U Enviroflex_316 RG_188_A/U	StCuAg StCuAg StCuAg	0.54 0.54 0.54	PTFE SPEX PTFE	1.54 1.54 1.55
Double screen	U4	K_02252_D* Enviroflex_316_D	StCuAg StCuAg	0.54 0.54	PTFE SPEX	1.54 1.54
Single screen	U7	RG_303_/U	StCuAg	0.95	PTFE	2.95
Double screen	U11	RG_400_/U Enviroflex_400	CuAg CuAg	1.00 1.00	PTFE SPEX	2.95 3.03
Double screen	U9	RG_142_B/U Enviroflex_142	StCuAg CuAg	0.95 0.95	PTFE SPEX	2.95 2.95
Double screen	U33	RG_393_/U Enviroflex_393	CuAg CuAg	2.37 2.46	PFA SPEX	7.25 7.30

Performance line 75 Ω

Screen type	Cable group	Cable type	Centre conductor		Insulation	
			Material	Ø mm	Material	Ø mm
Single screen	U5	RG_179_B/U Enviroflex_179 RG_187_A/U	StCuAg StCuAg StCuAg	0.30 0.30 0.30	PTFE SPEX PTFE	1.55 1.55 1.55
Double screen	R8	K_02253_D-02	StCuAg	0.30	PTFE	1.55

List of abbreviations

AL-PES	polyester aluminium
Cu	plain copper wire
CuAg	silvered copper wire
CuAl	aluminium wire, copper plated
CuSn	copper wire, tin plated
StCu	copper plated steel wire
StCuAg	silvered copper plated steel wire
FEP	fluorethylenepropylene
HDPE	high-density polyethylene
HL	semiconducting layer
LDPE	low-density polyethylene
LSFH	low smoke free halogene
PE	polyethylene
PEX	polyethylene, cross linked
PFA	perfluoralcoxy
PTFE	polytetrafluorethylene
PVC	polyvinylchloride
RADOX®	polyolefin, flame retardent
SPE	foam polyethylene
SPEX	foam polyethylene, cross linked

Screen		Jacket		Cable retention force *	Operating frequency range	Notes
Material	Ø mm	Material	Ø mm	N	GHz	
CuAg	0.90	PFA	1.25	14	1	
CuAg CuAg CuAg	1.33 1.35 1.33	FEP RADOX® PFA	1.80 1.84 1.83	33 33 33	3 3 1	
CuAg CuAg CuAg	2.00 2.05 2.00	FEP RADOX® PFA	2.50 2.52 2.60	54 54 54	3	
CuAg/CuAg CuAg/CuAg	2.0 - 2.5 2.0 - 2.5	FEP RADOX®	3.00 3.16	109 109	6	* equivalent cable: RD 316
CuAg	3.60	FEP	4.3	135	1	
CuAg/CuAg CuAg/CuAg	3.60 - 4.20 3.60 - 4.15	FEP RADOX®	4.95 5.10	258 258	6	
CuAg/CuAg CuAg/CuAg	3.60 - 4.25 3.54 - 4.20	FEP RADOX®	4.95 5.00	258 258	6	
CuAg/CuAg CuAg/CuAg	8.0 - 8.75 8.0 - 8.75	FEP RADOX®	19.90 10.05	478 478	6	

Screen		Jacket		Cable retention force *	Operating frequency range	Notes
Material	Ø mm	Material	Ø mm	N	GHz	
CuAg CuAg CuAg	2.00 2.13 2.00	FEP RADOX® PFA	2.54 2.54 2.65	54 54 54	3 3 1	
CuAg/CuAg	2.00 - 2.50	FEP	3.00	130	2	

* Value considers maximum load of the cables without irreversible variations of specifications.

[1] Double screened with helically wrapped foil

L'IMPULSION Retrouvez nous sur www.limpulsion.fr

Flexible RF cables (continuing)

Standard line 50 Ω

Screen type	Cable group	Cable type	Centre conductor		Insulation	
			Material	Ø mm	Material	Ø mm
Single screen	U1	G_01132-06	Cu	0.3	PE	1.00
Single screen	U2	RG_174_/U G_02232-09	CuSt Cu	0.48 0.49	PE PE	1.48 1.50
Double screen	U4	G_02232_D GX_02272_D-02	Cu CuSn	0.49 0.48	PE PEX	1.50 1.50
Single screen	U7	RG_58_C/U RADOX_RF_58	CuSn CuSn	0.90 0.90	PE PEX	2.95 2.95
Double screen	U9	RG_223_7U ENVIROFLEX_B223 GX_03272_D-06	CuAg CuAg	0.88 0.88	PE PEX	2.95 2.95
Single screen	U29	RG_213_/U	Cu	2.25	PE	7.25
Double screen	U42	RADOX_RF_213	Cu	2.25	PEX	7.25
Double screen	U32	RG_214_/U RG_214_HIFLEX	CuAg CuAg	2.25 2.25	PE PE	7.28 7.30
Double screen	U43	RADOX_RF_214	CuAg	2.25	PEX	7.28
Double screen	U38	RG_217_/U	Cu	2.70	PE	9.40

Standard line 75 Ω

Screen type	Cable group	Cable type	Centre conductor		Insulation	
			Material	Ø mm	Material	Ø mm
Single screen	U5	G_02233-01	StCu	0.24	PE	1.50
Single screen	U6	GX_03173-01	StCu	0.42	PE	2.45
Single screen	U12	G_03233	Cu	0.48	PE	2.95
Double screen	U14	G_03213_D	Cu	0.49	PE	2.95
Single screen	U16	RG_59_B/U RADOX_RF_59	StCu CuSn	0.58 0.66	PE PEX	3.64 3.83
Double screen	U18	G_04133_D	Cu	0.58	PE	3.64
Single screen	U34	RG_11_A/U GX_07273	CuSn Cu	1.20	PE	7.25
Double screen	U36	G_07273_D	CuSn	1.20	PE	7.25

List of abbreviations

AL-PES	polyester aluminium
Cu	plain copper wire
CuAg	silvered copper wire
CuAl	aluminium wire, copper plated
CuSn	copper wire, tin plated
StCu	copper plated steel wire
StCuAg	silvered copper plated steel wire
FEP	fluorethylenepropylene
HDPE	high-density polyethylene
HL	semiconducting layer
LDPE	low-density polyethylene
LSFH	low smoke free halogene
PE	polyethylene
PEX	polyethylene, cross linked
PFA	perfluoralcoxy
PTFE	polytetrafluorethylene
PVC	polyvinylchloride
RADOX®	polyolefin, flame retardent
SPE	foam polyethylene
SPEX	foam polyethylene, cross linked

Screen		Jacket		Cable retention force *	Operating frequency range	Notes
Material	Ø mm	Material	Ø mm	N	GHz	
CuSn	1.4	PVC	1.80	28	3	
CuSn Cu	2.00 2.00	PVC PVC	2.55 2.55	44 59	1	
Cu/Cu CuSn/CuSn	2.0 - 2.5 2.0 - 2.5	PVC RADOX®	3.10 3.20	120 120	6	
CuSn CuSn	3.60 3.60	PVC RADOX®	4.95 5.10	129 129	1 3	
CuAg/CuAg CuAg/CuAg	3.60 - 4.20 3.60 - 4.20	PVC RADOX®	5.40 5.40	258 258	6	
Cu	8.10	PVC	10.3	423	1	
CuAg	8.09	RADOX®	10.6	423	2	
CuAg/CuAg CuAg/CuAg	8.0 - 8.7 8.0 - 8.7	PVC PVC	10.8 10.8	478 478	6	
CuAg/CuAg	8.0 - 8.6	RADOX®	11.1	354	6	
Cu/Cu	10.3 - 11.200	PVC	13.85	952	6	

Screen		Jacket		Cable retention force *	Operating frequency range	Notes
Material	Ø mm	Material	Ø mm	N	GHz	
Cu	2.0	PVC	2.80	59	1	
CuSn	2.90	RADOX®	3.70	120	1	
Cu	3.60	PVC	5.00	129	1	
CuSn/CuSn	3.60 - 4.20	PUR	5.35	299	2	
Cu CuSn	4.50 4.42	PVC RADOX®	6.10 6.24	171 170	!	
Cu/Cu	4.40 - 5.00	PVC	6.70	399	2	
Cu	8.15/0.321	PVC	10.30	423	1	
Cu	8.0 - 8.70	PE	10.80	757	5	

* Value considers maximum load of the cables without irreversible variations of specifications.

L'IMPULSION
Retrouvez nous sur
www.limpulsion.fr

Flexible RF cables (continuing)

Specialites: Low noise

Screen type	Cable group	Cable type	Ω	Centre conductor		Insulation	
				Material	Ø mm	Material	Ø mm
Single screen	U3	G_01130_HT G_01130_HT-12	50 50	Cu	0.40	PE/HL	1.4 - 1.9
Single screen	U13	G_03130_HT G_03130_HT-01	75 75	Cu	0.50	PE/HL	3.0 - 3.4
Single screen	U18	G_04233_HT-01	75	StCu	0.58	PE/HL	3.64 - 4.20
Single screen	X5	G_02330_HT	50	Cu	0.50	PE/HL	1.50 - 1.90

Specialites: Various cables

Type	Cable group	Cable type	Ω	Centre conductor		Insulation	
				Material	Ø mm	Material	Ø mm
Symmetric screened cable	V1	RG_108_A/U	78	CuSn	2×0.96	PE	2.0 - 4.0
Triaxial cable	W1	G_02332	50	Cu	0.48	PE	1.50
Triaxial cable	W2	G_03332	50	Cu	0.93	PE	2.95
Triaxial cable	W2	G_03333	75	Cu	0.48	PE	2.95

List of abbreviations

AL-PES	polyester aluminium
Cu	plain copper wire
CuAg	silvered copper wire
CuAl	aluminium wire, copper plated
CuSn	copper wire, tin plated
StCu	copper plated steel wire
StCuAg	silvered copper plated steel wire
FEP	fluorethylenepropylene
HDPE	high-density polyethylene
HL	semiconducting layer
LDPE	low-density polyethylene
LSFH	low smoke free halogene
PE	polyethylene
PEX	polyethylene, cross linked
PFA	perfluoralcoxy
PTFE	polytetrafluorethylene
PVC	polyvinylchloride
RADOX®	polyolefin, flame retardent
SPE	foam polyethylene
SPEX	foam polyethylene, cross linked

Screen		Jacket		Cable retention force *	Operating frequency range	Notes
Material	Ø mm	Material	Ø mm	N	GHz	
CuAg	2.40	PVC	3.15	54.4	1	
Cu	4.00	PVC	5.00	128.7	1	
Cu	5.00	PVC	6.10	171	1	
Cu/Cu*	2.40 - 3.85*	PVC	5.30	199		*Triax

Screen		Jacket		Cable retention force *	Operating frequency range	Notes
Material	Ø mm	Material	Ø mm	N	GHz	
CuSn	4.70	PVC	6.00	110.4	1	
Cu Cu	2.00 3.05	PVC PVC	2.80 4.25	130.6	1	
Cu Cu	3.60 5.75	PVC PVC	5.00 7.35	294.32	1	
Cu Cu	3.60 5.75	PVC PVC	5.00 7.35	294.3	1	

* Value considers maximum load of the cables without irreversible variations of specifications.

L'IMPULSION
Retrouvez nous sur
www.limpulsion.fr

Microwave cables and corrugated RF cables

Semi-rigid (EZ), hand-formable (Sucoform) and flexible (Multiflex) microwave cables

Cable group	Cable type	Ω	Centre conductor		Insulation	
			Material	Ø mm/inches	Material	Ø mm/inchs
Y19	EZ_34	50	StCuAg	0.20/0.008	PTFE	0.66/0.026
Y15	EZ_47_TP_M17	50	StCuAg	0.29/0.011	PTFE	0.94/0.037
Y2	SUCOFORM_47	50	CuAg	0.31/0.012	PTFE	0.94/0.037
Y3	EZ_86	50	StCuAg	0.51/0.020	PTFE	1.68/0.066
Y4	EZ_86-75_TP	75	StCuAg	0.29/0.011	PTFE	1.73/0.068
Y10	EZ_118_TP	50	CuAg	0.81/0.032	PTFE	2.31/0.091
Y5	EZ_141_TP_M17	50	StCuAg	0.92/0.036	PTFE	2.98/0.117
Y6	EZ_141-75_TP	75	StCuAg	0.51/0.020	PTFE	2.98/0.117
Y7	EZ_250_TP_M17	50	CuAg	1.63/0.064	PTFE	5.31/0.209
Y16	SUCOFORM_86	50	StCuAg	0.53/0.021	PTFE	1.65/0.065
Y11	MULTIFLEX_86	50	CuAg	0.47/0.018	PTFE	1.48/0.058
Y12	SUCOFORM_141	50	StCuAg	0.95/0.037	PTFE	2.95/0.116
Y17	MULTIFLEX_141	50	CuAg	0.92/0.037	PTFE	2.96/0.117
Y14	SUCOFORM_250-01	50	CuAg	1.67/0.065	PTFE	5.24/0.209

Foam dielectric corrugated copper tube cables

Screen type	Cable group	Cable type	Ω			Insulation	
				Material	Ø mm/inches	Material	Ø mm/inches
Corrugated copper tube cable	M5	SUCOFEED_1/4_HF	50	AlCu	1.90/0.074	SPE	4.40/0.173
	M7	SUCOFEED_3/8_HF	50	AlCu	2.80/0.110	SPE	6.90/0.272
	M9	SUCOFEED_1/2_HF	50	AlCu	3.60/0.142	SPE	8.70/0.343
	M12	SUCOFEED_1/2	50	AlCu	4.80/0.189	SPE	11.90/0.469
	M23	SUCOFEED_7/8	50	Cu	9.00/0.354	SPE	22.00/0.866
	M25	SUCOFEED_7/8_LA	50	Cu	9.50/0.374	SPE	22.70/0.894
	M32	SUCOFEED_1_1/4	50	Cu	13.00/0.511	SPE	32.00/1.259
	M42	SUCOFEED_1_5/8	50	Cu	17.30/0.681	SPE	42.00/1.654

List of abbreviations

AL-PES	polyester aluminium
Cu	plain copper wire
CuAg	silvered copper wire
CuAl	aluminium wire, copper plated
CuSn	copper wire, tin plated
StCu	copper plated steel wire
StCuAg	silvered copper plated steel wire
FEP	fluorethylenepropylene
HDPE	high-density polyethylene
HL	semiconducting layer
LDPE	low-density polyethylene
LSFH	low smoke free halogene
PE	polyethylene
PEX	polyethylene, cross linked
PFA	perfluoralcoxy
PTFE	polytetrafluorethylene
PVC	polyvinylchloride
RADOX®	polyolefin, flame retardent
SPE	foam polyethylene
SPEX	foam polyethylene, cross linked

Screen		Jacket		Cable retention force *	Notes
Material	Ø mm/inches	Material	Ø mm/inches	N	
Cu	0.86/0.034			23.9	
CuSn	1.19/0.047			41.8	
CuSn	1.19/0.047			26.1	
Cu	2.20/0.086			158.5	
CuSn	2.20/0.086			139.5	
CuSn	2.95/0.116			246.0	
CuSn	3.58/0.141			309.1	
CuSn	3.58/0.141			309.1	
CuSn	6.35/0.250			952.4	
CuSn	2.20/0.086			100.0	
CuAg	2.20/0.086	FEP	2.650/0.104	160.0	
CuSn	3.58/0.141			100.0	
CuAg	3.58/0.141	FEP	4.140/0.163	160.0	
CuSn	6.30/0.248			100.0	

Screen		Jacket		Cable retention force *	Notes
Material	Ø mm/inches	Material	Ø mm/inches	N/lbs	
Cu	6.40/0.252	LDPE	7.70/0.303	100.0	
Cu	9.50/0.374	LDPE	10.80/0.425	150.0	
Cu	12.10/0.476	LDPE	13.40/0.528	200.0	
Cu	13.70/0.539	LDPE	16.00/0.630	200.0	
Cu	24.70/0.972	LDPE	27.75/1.093	700.0	
Cu	25.40/1.000	LDPE	27.90/1.098	700.0	
Cu	35.70/1.406	HDPE	39.50/1.550	> 700.0	
Cu	46.20/1.890	HDPE	50.00/1.968	> 700.0	

* Value considers maximum load of the cables without irreversible variations of specifications.

L'IMPULSION
Retrouvez nous sur
www.limpulsion.fr

AS12

AS12 according to MIL-C-39029/102 and /103

Description

HUBER+SUHNER size 12 contacts are RF contacts designed for installation in MIL-DTL-38999 and similar circular/sub-D connectors. The AS12 contacts are fully compatible with MIL-C-39029/102 and /103 designs but have been internally redisigned to provide exceptional RF performance from DC to 12.4 GHz.

Compatibility

50 Ω AS12 size 12 contacts are intermateable to MIL-C-39029/102 and /103 contacts without restrictions.

Content

Description AS12 acc. to MIL-C-39029/102 and /103	43
Compatibility	43
Interface dimensions in mm/inches	43
Description AS12 acc. to MIL-C-29029/73 BIN-396, -397 and -555 and MIL-C-39029/74	44
Compatibility	44
Interface dimensions in mm/inches	44
Technical data	45
Cable connectors	47
Adaptors	49

Interface dimensions (mm/inches)

Socket

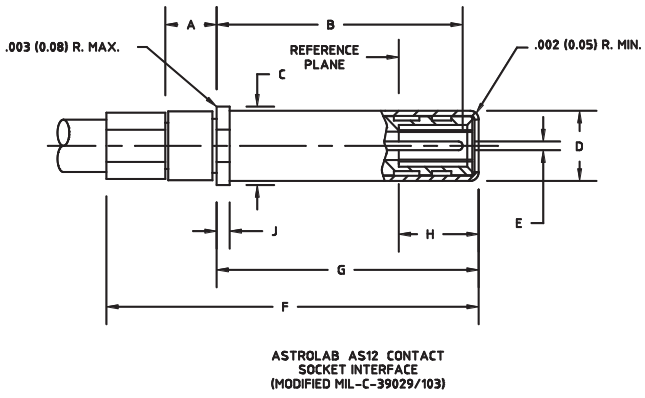

ASTROLAB AS12 CONTACT SOCKET INTERFACE (MODIFIED MIL-C-39029/103)

	Socket		Pin	
	min.	max.	min.	max.
A	1.70/0.067	-	4.55/0.179	4.62/0.182
B	15.31/0.603	15.57/0.613	2.36/0.093	2.41/0.095
C	4.55/0.179	4.62/0.182	0.64/0.025	0.68/0.027
D	4.01/0.158	4.06/0.160	7.49/0.295	7.62/0.300
E	0.495/0.0195	0.521/0.0205	0.74/ 0.029	0.84/0.033
F	-	22.76/0.896	4.11/0.162	-
G	15.74/0.620	15.89/0.626	1.70/0.067	-
H	4.22/0.166	-	-	14.48/0.570
J	0.74/0.029	0.84/0.033	6.30/0.248	-

Pin

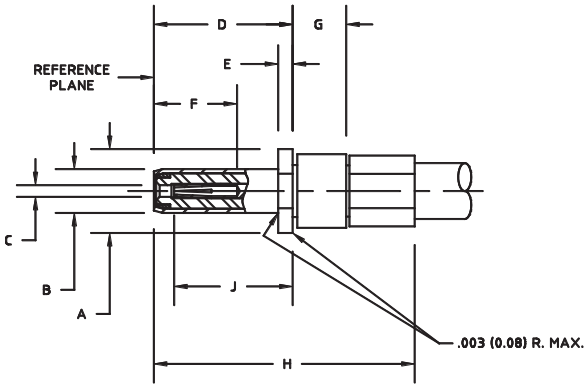

ASTROLAB AS12 CONTACT PIN INTERFACE (MODIFIED MIL-C-39029/102)

Interface dimensions conformable to the following standards:

USA: MIL-C-39029
Size 12 contact interface per MIL-C-39029/102 and /103

AS12

AS12 according to MIL-C-29029/73 BIN-396, -397 and -555 and MIL-C-39029/74

Compatibility

50 Ω AS12 size 12 contacts are intermateable to MIL-C-39029/73 BIN-396, -397, -398 and -555 and MIL-C-39029/74 contacts without restrictions.

Interface dimensions, inches (mm)

Socket

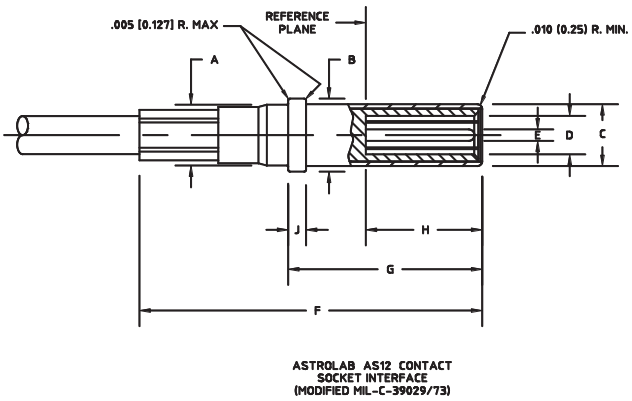

ASTROLAB AS12 CONTACT SOCKET INTERFACE (MODIFIED MIL-C-39029/73)

	Socket		Pin	
	min.	max.	min.	max.
A	3.94/0.155	4.01/0.158	0.89/0.035	-
B	4.75/0.187	4.85/0.190	2.36/0.093	2.41/0.095
C	4.01/0.158	4.09/0.161	3.76/0.148	3.84/0.151
D	2.46/0.097	2.54/0.100	4.75/0.187	4.83/0.190
E	0.711/0.028	0.749/0.295	3.94/0.155	4.01/0.158
F	see table 1		-	26.11/1.028
G	see table 1		15.39/0.606	15.57/0.613
H	7.62/0.300	-	7.62/0.300	-
J	1.12/0.044	1.22/0.048	0.76/0.030	1.27/0.050
K	-	-	2.92/0.115	3.05/0.120
L	-	-	-	0.76/0.030
M	-	-	1.14/0.045	1.40/0.055

Pin

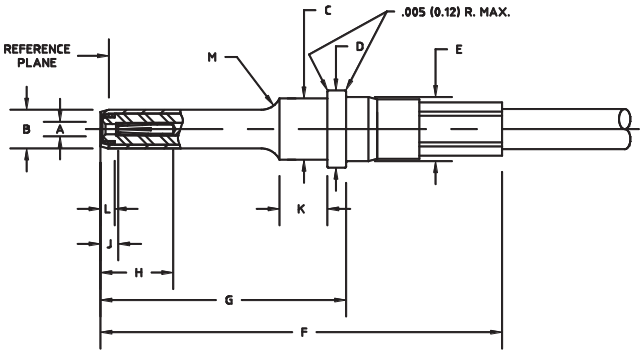

ASTROLAB AS12 CONTACT PIN INTERFACE (MODIFIED MIL-C-39029/74)

Table 1

BIN Code	F	G
396, 397, 398	23.24/0.915 23.03/0.907	12.70/0.500 12.50/0 .492
555	28.70/1.13 28.44/1.12	17.91/0.715 17.90/0.705

Interface dimensions conformable to the following standards:

USA: MIL-C-39029
Size 12 contact interface per MIL-C-39029/73 BIN codes 396, 397, 398 and 555, and MIL-C-39029/74

Cable groups see page 32 | Assembly tools see page 531 | Mounting holes/PCB layouts see page 561

L'IMPULSION | Retrouvez nous sur www.limpulsion.fr

AS12 – technical data

Electrical data	Requirements
Impedance	50 Ω
Frequency range	MIL-C-39029/73 and /74: DC to 12.4 GHz MIL-C-39029/102 and /103: DC to 2 GHz
Contact resistance	center conductor 6.0 milliohms max. outer conductor 2.0 milliohms max.
DWV	500 Vrms at sea level
Insulation resistance	5 000 megaohms min.
Corona levels	125 Vrms at 70 000 ft
RF high potential	325 Vrms at 5 MHz
RF leakage	80 dB max. at 2 GHz 60 dB max. at 2 to 12.4 GHz
Magnetic permeability	< 2 Mu
VSWR	MIL-C-39029/73 and /74: 1.35:1 to 12.4 GHz MIL-C-39029/102 and /103: 1.25:1 to 2 GHz
Insertion loss	0.09 + 0.08 √f in GHz

Mechanical data	Requirements
Durability	500 cycles min.
Force to engage	AS12 pin: 20 oz (5.560 N) max. AS12 socket: 36 oz (10.008 N) max.
Force to disengage	AS12 pin: 0.4 oz (0.111 N) min. AS12 socket: 2.5 oz (0.695 N) min.

Environmental data	Requirements
Temperature range	–55 to +125 °C
Thermal shock	MIL-STD-202, method 107, condition B
Moisture resistance	MIL-STD-202, method 106
Corrosion	MIL-STD-202, method 101, condition B
Sine vibration	MIL-STD-202, method 204, condition D
Random vibration	MIL-STD-202, method 214, condition K-I, 46.3 g
Shock	MIL-STD-202, method 213, condition I

Cable groups see page 32 | Assembly tools see page 531 | Mounting holes/PCB layouts see page 561

L'IMPULSION Retrouvez nous sur www.limpulsion.fr

AS12 – technical data

Material data		
Cable connectors	**Material**	**Plating**
Body	brass per ASTM B-16 or beryllium copper per ASTM B-196	gold plate per ASTM B-488, code C, type II over nickel plate per SAE-AMS-QQ-N-290, type 1
Contact	beryllium copper per ASTM B-196	gold plate per ASTM B-488, code C, type II over nickel plate per SAE-AMS-QQ-N-290, type 1
Dielectric	PTFE per ASTM D-1710, type I, grade 1	–
Ferrule	brass per ASTM B-135	gold plate per ASTM B-488, code C, type II over nickel plate per SAE-AMS-QQ-N-290, type 1
Adaptors	**Material**	**Plating**
Body	brass per ASTM B-16	gold plate per ASTM B-488, code C, type II over nickel plate per SAE-AMS-QQ-N-290, type 1
	#303 SS per ASTM A- 582	passivated per SAE-AMS-2700
Nut	#303 SS per ASTM A- 582	passivated per SAE-AMS-2700
Contact	beryllium copper per ASTM B-196	gold plate per ASTM B-488, code C, type II over nickel plate per SAE-AMS-QQ-N-290, type 1
Dielectric	PTFE per ASTM D-1710, type I, grade 1 and Noryl® PPO modified polyphenylene oxide resin	–
Retaining ring	beryllium copper per ASTM B-197	–
Gasket	silicone rubber per SAE-AMS-3304	–

Performance listed is typical. Individual part configuration may vary. Contact HUBER+SUHNER for more information and specifications by part number. Customer specific factors pertaining to recommended mounting patterns including transmission line topology, substrate thickness and material, board-stackup, operating frequency, etc. must be submitted to HUBER+SUHNER for analysis prior to release of final performance levels and mounting configurations.

Cable groups see page 32 | Assembly tools see page 531 | Mounting holes/PCB layouts see page 561

L'IMPULSION
Retrouvez nous sur
www.limpulsion.fr

AS12 – cable connectors

AS12 pin contact (MIL-C-39029/102)

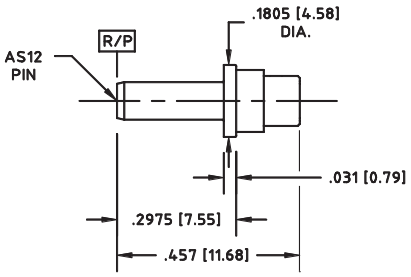

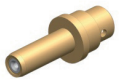

HUBER+SUHNER type	Item no.	Cable group (example)	Packaging
29930-2	80368774	Y3, Y16, Y11 (0.086 in. (2.18 mm))	single

AS12 socket contact (MIL-C-39029/103)

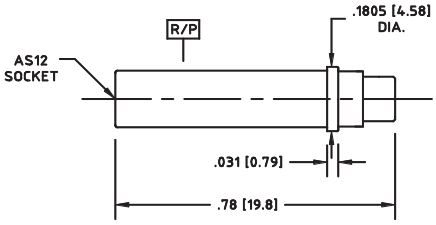

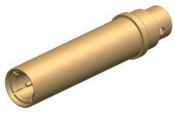

HUBER+SUHNER type	Item no.	Cable group (example)	Packaging
29931-2	80368775	Y3, Y16, Y11 (0.086 in. (2.18 mm))	single

AS12 pin contact (MIL-C-39029/74)

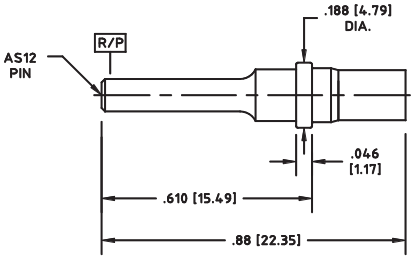

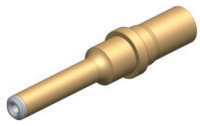

HUBER+SUHNER type	Item no.	Cable group (example)	Packaging
29933-2	80395456	Y3, Y16, Y11 (0.086 in. (2.18 mm))	single

Cable groups see page 32 | Assembly tools see page 531 | Mounting holes/PCB layouts see page 561

L'IMPULSION
Retrouvez nous sur
www.limpulsion.fr

AS12 – cable connectors

AS12 socket contact (MIL-C-39029/73)

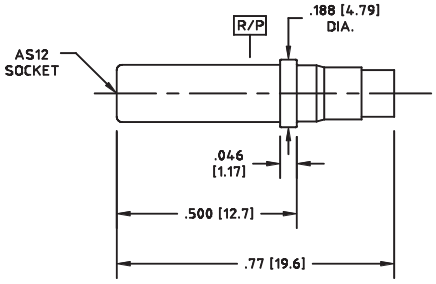

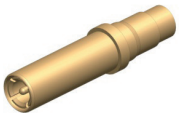

HUBER+SUHNER type	Item no.	Cable group (example)	Packaging
29934-2	80340816	Y3, Y16, Y11 (0.086 in. (2.18 mm))	single

Cable groups see page 32 | Assembly tools see page 531 | Mounting holes/PCB layouts see page 561

AS12 – adaptors

AS12 pin contact (MIL-C-39029/102) – 3.5 mm jack

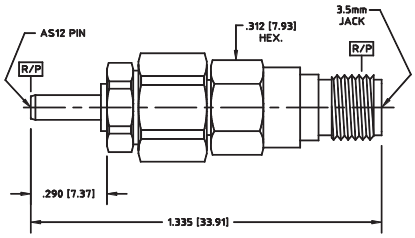

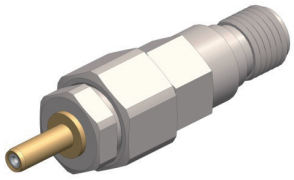

HUBER+SUHNER type	Item no.	Packaging
29932-1	80320105	single

AS12 socket contact (MIL-C-39029/103) – 3.5 mm jack

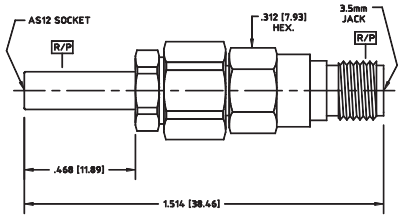

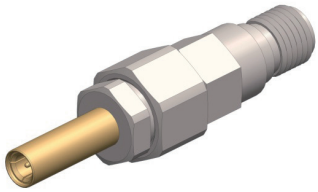

HUBER+SUHNER type	Item no.	Packaging
29932-2	80320106	single

AS12 socket contact (MIL-C-39029/103) – 3.5 mm plug

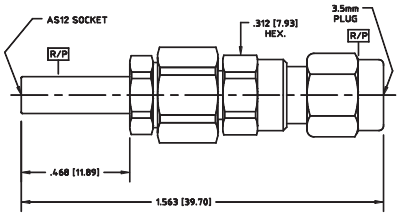

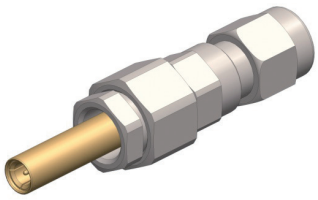

HUBER+SUHNER type	Item no.	Packaging
29932-3	80360204	single

Cable groups see page 32 | Assembly tools see page 531 | Mounting holes/PCB layouts see page 561

L'IMPULSION
Retrouvez nous sur
www.limpulsion.fr

AS12 – adaptors

AS12 pin contact (MIL-C-39029/102) – 3.5 mm plug

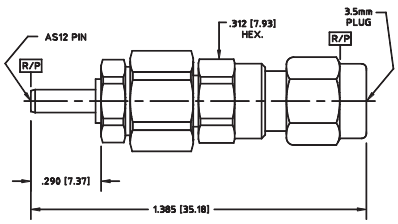

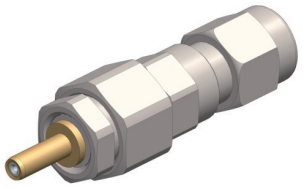

HUBER+SUHNER type	Item no.	Packaging
29932-4	80360205	single

Cable groups see page 32 | Assembly tools see page 531 | Mounting holes/PCB layouts see page 561

L'IMPULSION
Retrouvez nous sur
www.limpulsion.fr

AS16

Description

HUBER+SUHNER size 16 contacts are RF contacts designed for installation in MIL-DTL-38999 and similar circular/sub-D connectors. The AS16 contacts are fully compatible with MIL-C-39029/102 and /103 designs but have been internally redisigned to provide exceptional RF performance from DC to 2 GHz. The AS16 contact is a smaller diameter RF blind mate solution than the AS12 interface.

Content

Description	51
Compatibility	51
Interface dimensions in mm/inches	51
Technical data	52
PCB mount connectors	54
Adaptors	55

Compatibility

50 Ω AS16 size 16 contacts are intermateable to MIL-C-39029/76, /77 and /78 contacts without restrictions.

Interface dimensions (mm/inches)

Socket

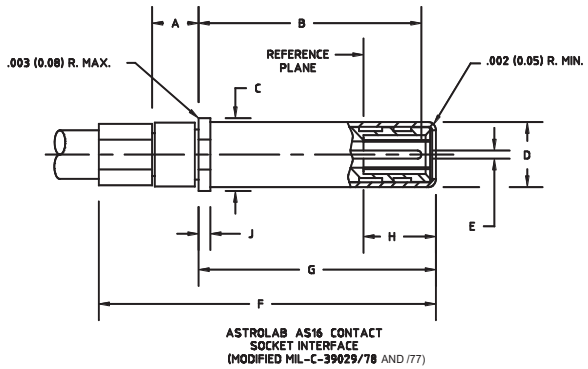

	Socket		Pin	
	min.	max.	min.	max.
A	1.60/0.063	-	3.23/0.127	3.30/0.130
B	see table 1		1.562/0.0615	1.613/0.0635
C	3.23/0.127	3.30/0.130	0.97/0.038	1.04/0.041
D	-	2.87/0.113	0.46/0.018	0.56/0.022
E	0.368/0.0145	0.394/0.0155	7.49/0.295	7.62/0.300
F	see table 1		4.22/0.166	-
G	see table 1		0.74/0.029	0.84/0.033
H	4.22/0.166	-	-	14.48/0.570
J	0.74/0.029	0.84/0.033	6.65/0.262	-

Pin

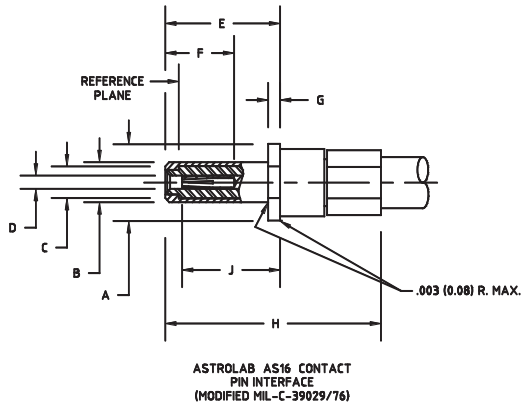

Table 1

	Socket			
	MIL-C-39029/78		MIL-C-39029/77	
	min.	max.	min.	max.
B	6.71/0.264	6.95/0.274	15.27/0.601	15.52/0.611
F	-	14.22/0.560	-	22.76/0.896
G	7.09/0.279	7.34/0.289	15.75/0.620	15.90/0.626

Interface dimensions conformable to the following standards:

USA: MIL-C-39029/76, /77, /78

Cable groups see page 32 | Assembly tools see page 531 | Mounting holes/PCB layouts see page 565

L'IMPULSION
Retrouvez nous sur
www.limpulsion.fr

AS16 – technical data

Electrical data	Requirements
Impedance	50 Ω
Frequency range	DC to 2 GHz
Contact resistance	center conductor 6.0 milliohms max. outer conductor 2.0 milliohms max.
DWV	375 Vrms at sea level
Insulation resistance	5000 megaohms min.
Corona levels	90 Vrms at 70 000 ft
RF high potential	190 Vrms at 5 MHz
RF leakage	80 dB max. at 2 GHz
Magnetic permeability	< 2 Mu
VSWR	1.2:1 to 2 GHz
Insertion loss	0.09 + 0.08 √f in GHz

Mechanical data	Requirements
Durability	500 cycles min.
Force to engage	AS16 pin: 14 oz (3.892 N) max. AS16 socket: 36 oz (10.008 N) max.
Force to disengage	AS16 pin: 0.4 oz (0.111 N) min. AS16 socket: 1.5 oz (0.417 N) min.

Environmental data	Requirements
Temperature range	–55 to +125 °C
Thermal shock	MIL-STD-202, method 107, condition B
Moisture resistance	MIL-STD-202, method 106
Corrosion	MIL-STD-202, method 101, condition B
Sine vibration	MIL-STD-202, method 204, condition D
Random vibration	MIL-STD-202, method 214, condition K-I, 46.3 g
Shock	MIL-STD-202, method 213, condition I

Cable groups see page 32 | Assembly tools see page 531 | Mounting holes/PCB layouts see page 561

AS16 – technical data

Material data		
Cable and PCB connectors	**Material**	**Plating**
Body and contact	beryllium copper per ASTM B-196	gold plate per ASTM B-488, code C, type II over nickel plate per SAE-AMS-QQ-N-290, type 1
Dielectric	PTFE per ASTM D-1710, type I, grade 1	–
Ferrule	brass per ASTM B-135	gold plate per ASTM B-488, code C, type II over nickel plate per SAE-AMS-QQ-N-290, type 1
Adaptors	**Material**	**Plating**
Body	#303 SS per ASTM A- 582	gold plate per ASTM B-488, code C, type II over nickel plate per SAE-AMS-QQ-N-290, type 1 or passivated per SAE-AMS-2700
Sheath	#303 SS per ASTM A- 582	passivated per SAE-AMS-2700
Contact	beryllium copper per ASTM B-196	gold plate per ASTM B-488, code C, type II over nickel plate per SAE-AMS-QQ-N-290, type 1
Dielectric	PTFE per ASTM D-1710, type I, grade 1	–

Performance listed is typical. Individual part configuration may vary. Contact HUBER+SUHNER for more information and specifications by part number. Customer specific factors pertaining to recommended mounting patterns including transmission line topology, substrate thickness and material, board-stackup, operating frequency, etc. must be submitted to HUBER+SUHNER for analysis prior to release of final performance levels and mounting configurations.

Cable groups see page 32 | Assembly tools see page 531 | Mounting holes/PCB layouts see page 561

L'IMPULSION
Retrouvez nous sur
www.limpulsion.fr

AS16 – PCB mount connectors

AS16 pin contact (MIL-C-39029/76)

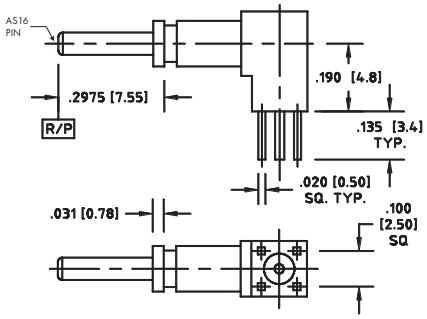

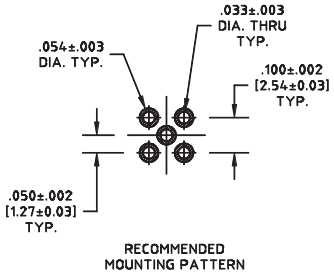

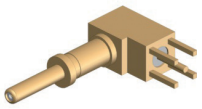

HUBER+SUHNER type	Item no.	Packaging
29556A-BM1	80318446	single

Cable groups see page 32 | Assembly tools see page 531 | Mounting holes/PCB layouts see page 565

L'IMPULSION
Retrouvez nous sur
www.limpulsion.fr

AS16 – adaptors

AS16 pin contact (MIL-C-39029/76) – SMA jack

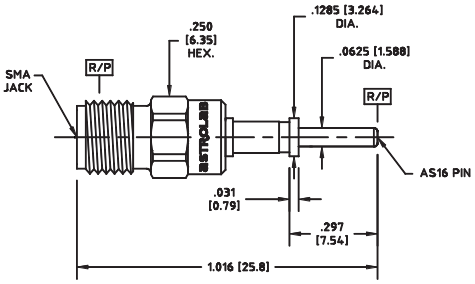

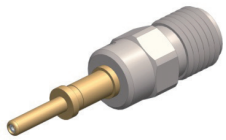

HUBER+SUHNER type	Item no.	Packaging
29557-4	80318451	single

AS16 socket contact (MIL-C-39029/77) – SMA jack

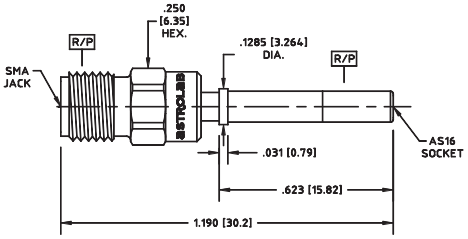

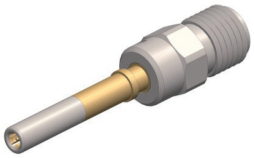

HUBER+SUHNER type	Item no.	Packaging
29557-5	80318453	single

Cable groups see page 32 | Assembly tools see page 531 | Mounting holes/PCB layouts see page 565

L'IMPULSION
Retrouvez nous sur
www.limpulsion.fr

L'IMPULSION | Retrouvez nous sur www.limpulsion.fr

Board-to-board

Content

Series MBX	59
Series MFBX	69
Series MMBX	75

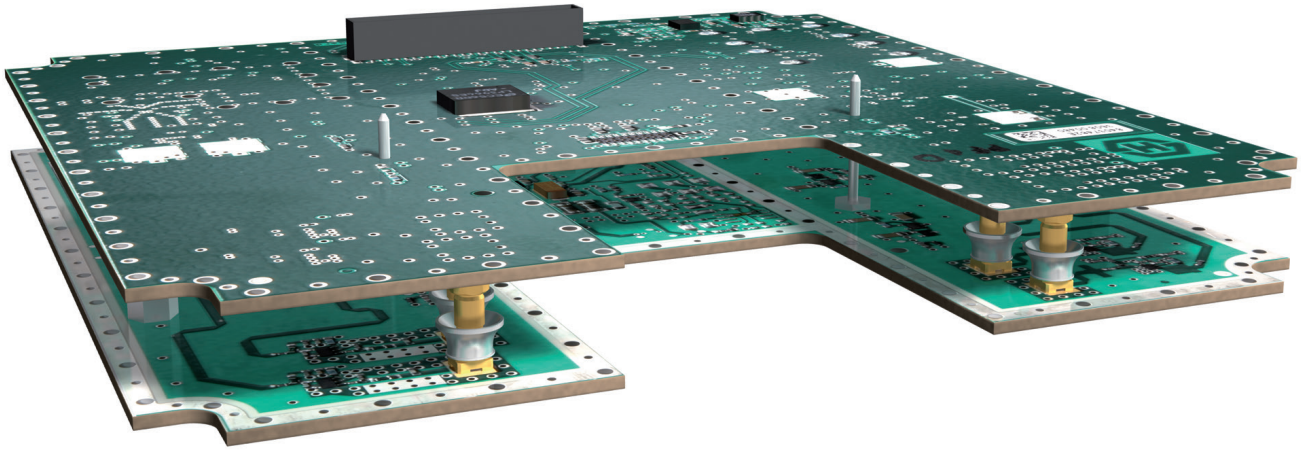

Benefits

Lower cost
Direct board-to-board connections with compensating misalignment (axial float ± 1.2 mm) do not only save costs compared to cable connections but rather allow larger tolerances on all other parts.

Minituarization
HUBER+SUHNER board-to-board connectors provide the smallest board-to-board distance (6.7 mm) in class. This enables smaller designs with less weight and provide much more space on the PCB boards.

Reliable connection
Due to the unique fully automated production process and therewith 100 % interface control highest quality requirements, capacity and flexibility can be achieved.

High output power and excellent RF performance
HUBER+SUHNER board-to-board connectors can handle very high power requirements (260 W) in a module environment where high ambient temperatures are given.

This opens new possibilities for module designs without active cooling. Thanks to the unique ball joint design the connectors provide excellent return loss values over the complete floating range combined with outstanding RF shielding performance.

Secure mating
Thanks to the largest connecting range in class and therewith always given blind mateability, very fast module assemblies are possible.

L'IMPULSION
Retrouvez nous sur
www.limpulsion.fr

One product family covering all board-to-board applications

MBX



- Very high axial float – best in class
- High output power
- Excellent return loss values
- Smallest board-to-board distances in class

MBX 2nd generation



- Very high axial float – best in class
- Excellent return loss values
- Smallest board-to-board distances in class

MFBX



- Medium float
- Low cost
- Very good board-to-board shielding
- Small board-to-board distances

MMBX



- Very high frequencies – best in class
- Very good return loss values
- Smallest board-to-board distances in class

Characteristics	MBX and MBX2nd	MFBX	MMBX
Frequency	DC to 6 GHz	DC to 6 GHz	DC to 12.4 GHz
Axial float (misalignment)	± 1.2 mm	± 0.8 mm	± 0.3 mm
Radial float (misalignment)	± 0.6 mm (at 13 mm board-to-board distance) ± 1.0 mm (≥ 18 mm board-to-board distance)	± 0.8 mm	± 0.4 mm (at 6.7 mm board-to-board distance)
Min. board-to-board distance	13 mm	13 mm	6.7 mm
Min. panel-to-board distance	< 13 mm depending on connector	< 13 mm depending on connector	4.63 mm
Min. panel-to-panel distance	< 13 mm depending on connector	< 13 mm depending on connector	2.56 mm
Power at room temperature, at 2.4 GHz	typical 260 W (MBX) typical 240 W (MBX2nd)	typical 130 W	typical 260 W

L'IMPULSION
Retrouvez nous sur
www.limpulsion.fr

Series MBX – miniature board connectors

Description

HUBER+SUHNER MBX and MBX 2nd generation connectors are especially developed for board-to-board and board-to-module RF interconnections. The mechanical design is outstanding, allowing the MBX to cope with mechanical misalignment in radial and axial directions and still hold an excellent electrical performance.

MBX fulfils higher requirements with best in class axial misalignment of ± 1.2 mm. MBX is the answer to higher integration and miniaturisation. It is the perfect solution for multiple connections from board-to-board/board-to-module and complex stack-ups in radio module applications.

Content

Description	59
Design guideline	60
Technical data	61
PCB connectors	63
Adaptors within series	65
Cable connectors	65
Receptacles with solder end	66
Assembly and disassembly tool	67

Characteristics	MBX and MBX2nd
Frequency	DC to 6 GHz
Axial float (misalignment)	± 1.2 mm
Radial float (misalignment)	± 0.6 mm (at 13 mm board-to-board distance) ± 1.0 mm (≥ 18 mm board-to-board distance)
Min. board-to-board distance	13 mm
Min. panel-to-board distance	< 13 mm depending on connector
Min. panel-to-panel distance	< 13 mm depending on connector
Power at room temperature, at 2.4 GHz	typical 260 W (MBX) typical 240 W (MBX2nd)

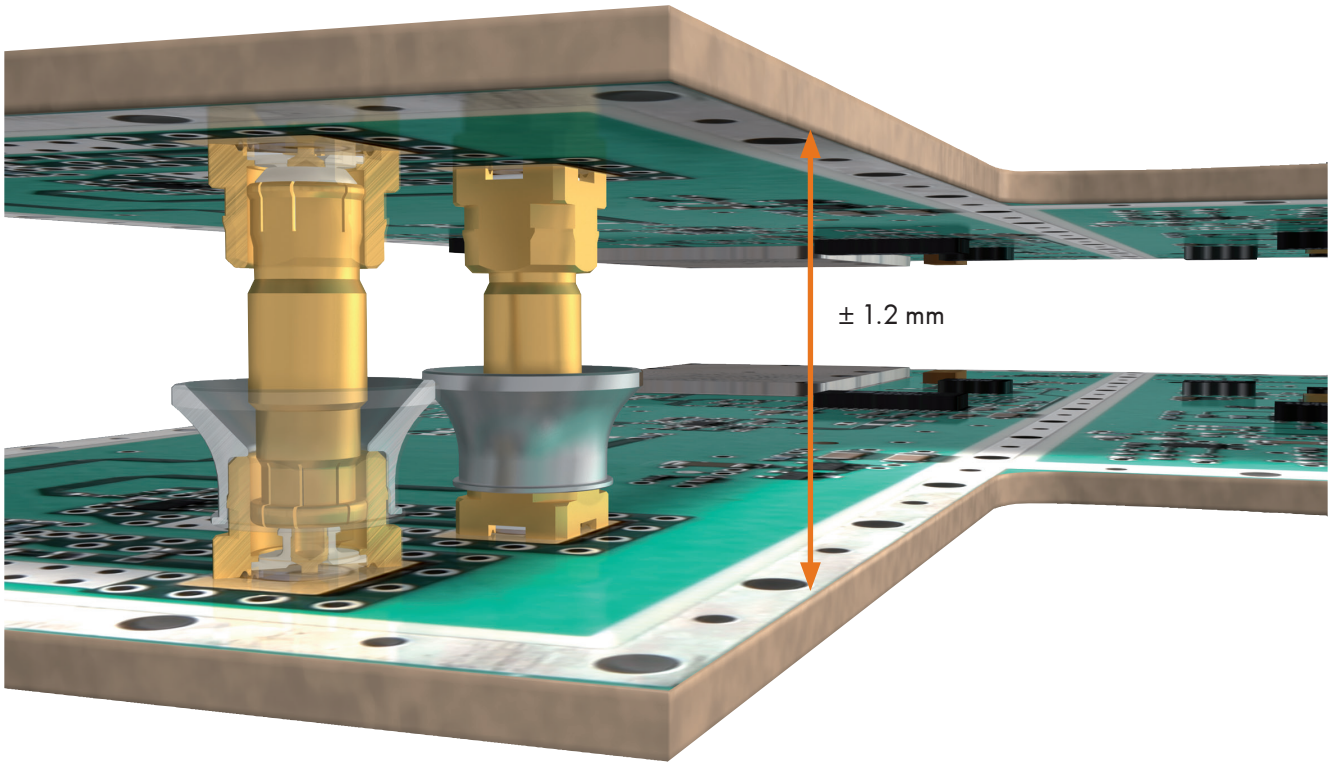

Series MBX – design guideline

Working range (axial and radial)

In mated condition, the two PCB connector have to be aligned within the dimension given for the axial and radial working range.

The axial working range is ± 1.2 mm, the radial working range is ± 1.0 mm.

In contradiction to the MMBX interface, the tilt of the adaptor is limited with MBX. The great advantage of this feature is that there is a constant connecting range/radial working range for all adaptor lengths and thus the same funnel (pull-in range) can be used.

Connecting range

The two PCB connector have to be aligned within the dimension given for connecting range. The connecting range is ± 1.0 mm and is equivalent to the max. allowed misalignment between two PCB boards when mating.

In order to guarantee a blind mateable connection, the tilted adaptor will be guided by the funnel of the opposite connector.

Recommendation

HUBER+SUHNER recommends using guiding pins to align the boards within the connecting range and working range. Distance holders to maintain the axial misalignment within working range are also of benefit.

HUBER+SUHNER provides outline drawings for every application with the relevant mechanical dimensions that need to be considered when designing-in MBX. 3D STEP files are available on www.hubersuhner.com.

MBX 2nd generation

An alternative, cost effective and reliable solution are the 2nd generation MBX connectors. By keeping best in class mechanical characteristics like working and connecting range these connectors are designed to meet today's requirements within the communication industry. Standard MBX and 2nd generation MBX are intermateable.

Connecting range

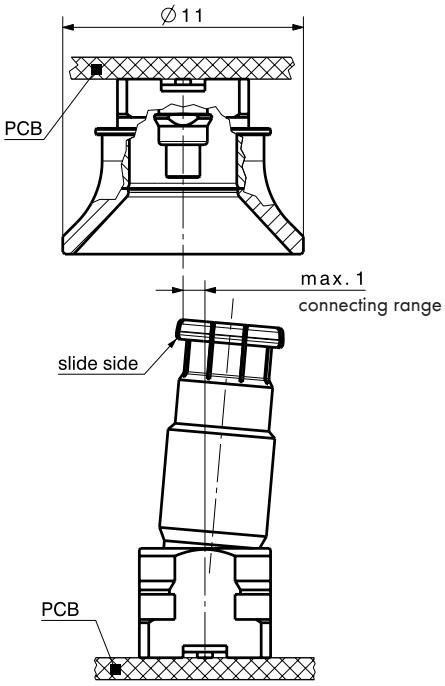

Working range

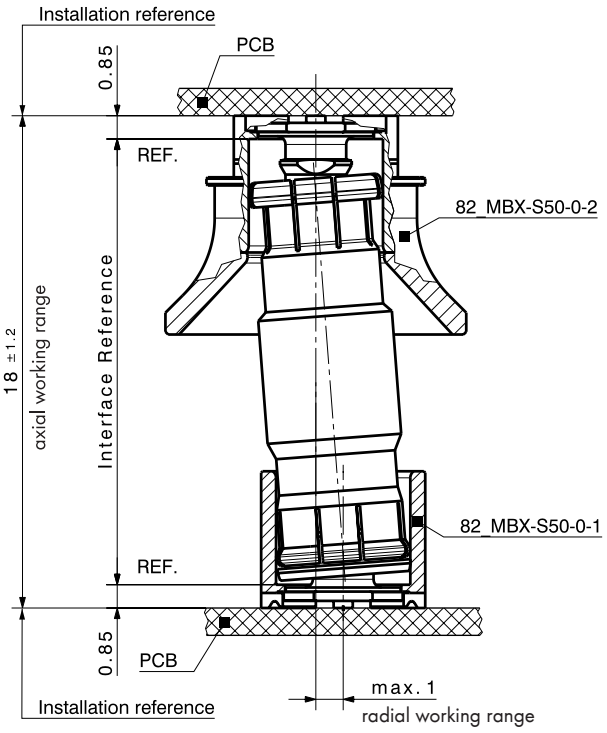

L'IMPULSION | Retrouvez nous sur www.limpulsion.fr

Series MBX – technical data

MBX PCB connectors – board-to-board/adaptors within series

Electrical data	MBX		MBX 2nd	
Impedance	50 Ω			
Frequency range	DC to 6 GHz			
Dielectric withstanding voltage (at sea level)	1 kV rms, 50 Hz			
Working voltage (at sea level)	≤ 330 V rms, 50 Hz			
Insulation resistance	≥ 1 GΩ			
Contact resistance • Centre contact • Outer contact	 ≤ 5 mΩ ≤ 2.5 mΩ		 ≤ 5 mΩ ≤ 5 mΩ	
Return loss/VSWR	typical values for a board-to-board connection (measured on a board)			
	axial misalignment	DC to 2.5 GHz	2.5 to 4 GHz	4 to 6 GHz
	± 1.2 mm ± 0.8 mm ± 0.4 mm	22 dB/1.17 23 dB/1.15 26 dB/1.11	19 dB/1.25 20 dB/1.22 21 dB/1.20	15 dB/1.43 16 dB/1.38 18 dB/1.29
RF-leakage (interface only)	≥ 70 dB (DC to 6 GHz)			
Power (room temperature)	typical 260 W at 2.4 GHz		typical 240 W at 2.4 GHz	

Mechanical data	MBX	MBX 2nd
Engagement force (slide-side)	≤ 15 N/3.4 lbs	
Disengagement force (slide-side)	≤ 15 N/3.4 lbs	
Durability (matings)	100	50
Axial float (misalignment)	± 1.2 mm	
Radial float (misalignment)	depending on the adaptor ± 0.6 mm (at 13 mm board-to-board distance) ± 1.0 mm (≥ 18 mm board-to-board distance)	

Environmental data	MBX	MBX 2nd
Temperature range	–55 to +155 °C/–67 to +311 °F	
Climatic category	55/155/10	
Thermal shock	MIL-STD-202, method 107 G, condition B1	
Moisture resistance	MIL-STD-202, method 106 F	
Vibration	MIL-STD-202, method 204 D, condition A	
Mechanical shock	MIL-STD-202, method 213 B, condition B	
Corrosion	MIL-STD-202, method 101, condition B	–

Processing data	MBX	MBX 2nd
Adherent to the print • Shearing • Pulling (vertical to PCB)	 ≥ 150 N/33.7 lbs ≥ 150 N/33.7 lbs	

Material data		
Connector parts	**Material**	**Plating**
Centre contact	brass/bronze/copper-beryllium alloy	SUCOPRO® gold plating
Outer contact	brass/bronze	SUCOPRO® gold plating/SUCOPLATE®
Body	brass	SUCOPRO® gold plating/SUCOPLATE®
Insulators	LCP/PTFE/PFA	
Funnel	brass/PA	SUCOPLATE®/–

Performance values are typical for the connector interface. Individual component or connector performance may vary depending on the connector design, attachment (e.g. cable, PCB) or application. For detailed specifications please refer to the specific data sheets on our website www.hubersuhner.com.

L'IMPULSION
Retrouvez nous sur
www.limpulsion.fr

Series MBX – technical data

MBX cable connectors

Electrical data	Requirements
Impedance	50 Ω
Frequency range	DC to 6 GHz
Dielectric withstanding voltage (at sea level)	750 V rms, 50 Hz
Working voltage (at sea level)	250 V rms, 50 Hz
Insulation resistance	≥ 1 GΩ
Contact resistance • Centre contact • Outer contact	 ≤ 5 mΩ ≤ 2.5 mΩ
Return loss/VSWR (typical values)	≥ 30 dB/1.07 (DC to 2.5 GHz) ≥ 25 dB/1.12 (2.5 – 6 GHz)

Mechanical data	Requirements
Engagement force	max. 30 N/max. 6.7 lbs
Disengagement force	8 to 30 N/1.8 to 6.7 lbs
Durability (matings)	100

Environmental data	Test conditions
Temperature range	–55 to +155°C/–67 to +311°F
Climatic category	55/155/10
Thermal shock	MIL-STD-202, method 107 G, condition A1
Moisture resistance	MIL-STD-202, method 106 F
Corrosion	MIL-STD-202, method 101, condition B
Vibration	MIL-STD-202, method 204 D, condition A
Mechanical shock	MIL-STD-202, method 213 B, condition B

Material data		
Connector parts	Material	Plating
Centre contact	brass/bronze/copper-beryllium alloy	SUCOPRO® gold plating
Outer contact	bronze/copper-beryllium alloy	SUCOPRO® gold plating
Body	brass	SUCOPRO® gold plating/SUCOPLATE®
Crimp ferrules	copper	gold/SUCOPLATE®
Insulators	LCP/PTFE/PFA	

Performance values are typical for the connector interface. Individual component or connector performance may vary depending on the connector design, attachment (e.g. cable, PCB) or application. For detailed specifications please refer to the specific data sheets on our website www.hubersuhner.com.

L'IMPULSION
Retrouvez nous sur
www.limpulsion.fr

Series MBX – PCB connectors

Straight PCB jacks (female)

Surface mount type SMT

• MBX

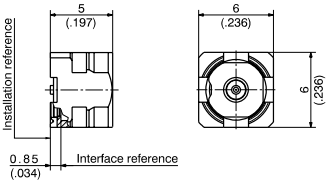

Fig. 1

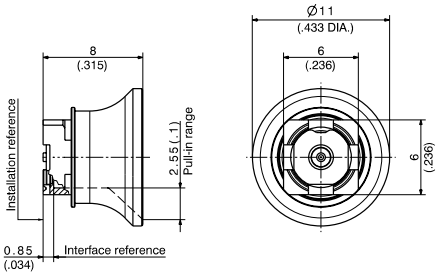

Fig. 2



HUBER+SUHNER type	Item no.	Packaging	Soldering pad	Fig.
82_MBX-S50-0-1/111_NE 82_MBX-S50-0-1/111_NH 82_MBX-S50-0-1/111_NM	84104680 84094199 84094200	single bulk 100 pcs. tape and reel	ML 173	1
82_MBX-S50-0-2/113_NE 82_MBX-S50-0-2/113_NH 82_MBX-S50-0-2/113_NM	84104681 84094287 84094288	single bulk 100 pcs. tape and reel		2

Surface mount type SMT

• MBX 2nd generation

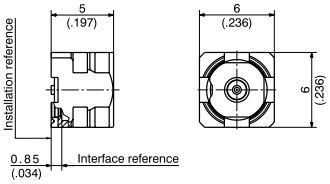

Fig. 1

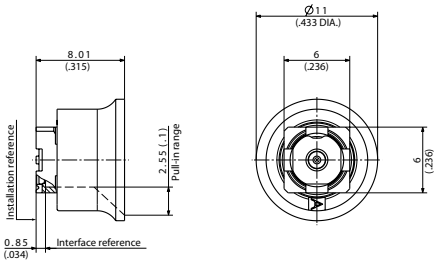

Fig. 2



HUBER+SUHNER type	Item no.	Packaging	Soldering pad	Fig.
82_MBX-S50-0-23/111_NE 82_MBX-S50-0-23/111_NH 82_MBX-S50-0-23/111_NM	85018772 85018773 85015265	single bulk 100 pcs. tape and reel	ML 173	1
82_MBX-S50-0-24/111_NE 82_MBX-S50-0-24/111_NH 82_MBX-S50-0-24/111_NM	85018775 85018776 85018774	single bulk 100 pcs. tape and reel		2

Cable groups see page 32 | Assembly tools see page 531 | Mounting holes/PCB layouts see page 561

Series MBX – PCB connectors

Straight PCB jacks (female)

Through hole type THT

• MBX

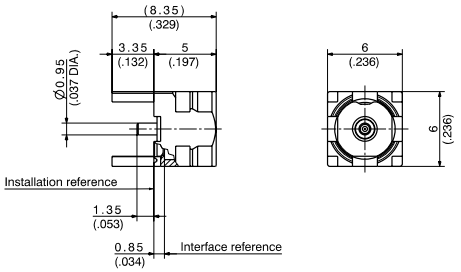

Fig. 1

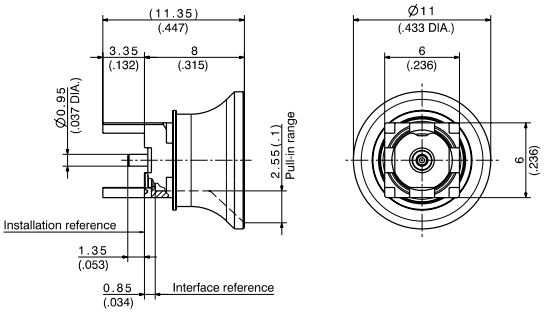



Fig. 2

HUBER+SUHNER type	Item no.	Packaging	Soldering pad	Fig.
82_MBX-50-0-3/111_NE 82_MBX-50-0-3/111_NH 82_MBX-50-0-3/111_NM	84104683 84094366 84094369	single bulk 100 pcs. tape and reel	ML 174	1
82_MBX-50-0-4/113_NE 82_MBX-50-0-4/113_NH 82_MBX-50-0-4/113_NM	84104684 84094405 84094406	single bulk 100 pcs. tape and reel		2

Through hole type THT

• MBX 2nd generation

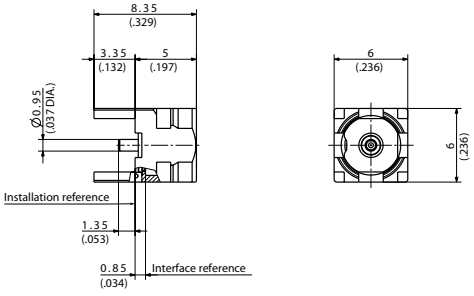



Fig. 1

HUBER+SUHNER type	Item no.	Packaging	Soldering pad	Fig.
82_MBX-50-0-28/111_NE 82_MBX-50-0-28/111_NH 82_MBX-50-0-28/111_NM	85018976 85018972 85018970	single bulk 100 pcs. tape and reel	ML 174	1

Cable groups see page 32 | Assembly tools see page 531 | Mounting holes/PCB layouts see page 561

Series MBX – adaptors within series

Straight adaptors

Plug to plug (male)

• MBX

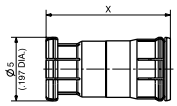



Black insulator: slide-side
White insulator: snap-side

HUBER+SUHNER type	Item no.	Packaging	Board-to-board distance	Adaptor length X
32_MBX-50-0-1/111_NE 32_MBX-50-0-1/111_NH	84104690 84142599	single bulk 100 pcs.	13 mm/0.512 in.	9.7 mm/0.382 in.
32_MBX-50-0-2/111_NE 32_MBX-50-0-2/111_NH	84104691 84094285	single bulk 100 pcs.	18 mm/0.709 in.	14.7 mm/0.579 in.
32_MBX-50-0-3/111_NE 32_MBX-50-0-3/111_NH	84104692 84094387	single bulk 100 pcs.	28 mm/1.102 in.	24.6 mm/0.969 in

Adaptors with other lengths available upon request.

Plug to plug (male)

• MBX 2nd generation

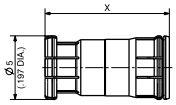



Black insulator: slide-side
White insulator: snap-side

HUBER+SUHNER type	Item no.	Packaging	Board-to-board distance	Adaptor length X
32_MBX-50-0-1/133_NE 32_MBX-50-0-1/133_NH	85001197 85001201	single bulk 100 pcs.	13 mm/0.512 in.	9.7 mm/0.382 in..
32_MBX-50-0-2/133_NE	85001211	single	18 mm/0.709 in.	14.7 mm/0.579 in.

Adaptors with other lengths available upon request.

Series MBX – cable connectors

Straight cable plugs (male)

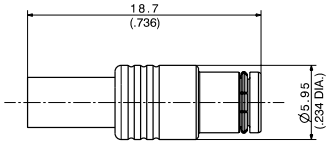



HUBER+SUHNER type	Item no.	Cable group (example)	Packaging	Assembly instruction
11_MBX-50-2-1/113_NE 11_MBX-50-2-1/113_NH	84104694 84093696	U4 (ENVIROFLEX_316_D)	single bulk 100 pcs.	0000333519

Cable groups see page 32 | Assembly tools see page 531 | Mounting holes/PCB layouts see page 561

Series MBX – cable connectors

Right angle cable plugs (male)

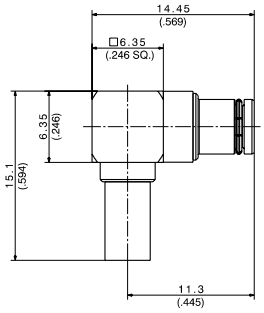



HUBER+SUHNER type	Item no.	Cable group (example)	Packaging	Assembly instruction
16_MBX-50-2-1/113_NE 16_MBX-50-2-1/113_NH	84104696 84093680	U4 (ENVIROFLEX_316_D)	single bulk 100 pcs.	0000326568

Series MBX – receptacles with solder end

Receptacles, jack (female)

- MBX

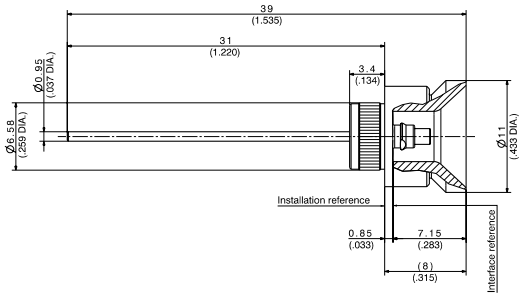

Fig. 1

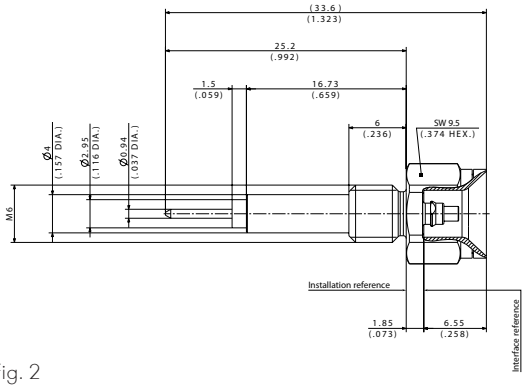

Fig. 2



HUBER+SUHNER type	Item no.	Packaging	Assembly instruction	Fig.
22_MBX-50-0-1/113_NY	84097667	industrial 100 pcs.	pressed-in	1
22_MBX-50-0-2/113_NY	84095796		screwed-in	2

Cable groups see page 32 | Assembly tools see page 531 | Mounting holes/PCB layouts see page 561

L'IMPULSION
Retrouvez nous sur
www.limpulsion.fr

Series MBX – assembly and disassembly tool

To assemble
use this side

To disassemble
use this side



HUBER+SUHNER type	Item no.	Packaging	Operating instruction
74_Z-0-0-488	84101887	single	-

Cable groups see page 32 | Assembly tools see page 531 | Mounting holes/PCB layouts see page 561

L'IMPULSION
Retrouvez nous sur
www.limpulsion.fr

L'IMPULSION
Retrouvez nous sur
www.limpulsion.fr

Series MFBX – medium float board connectors

Description

HUBER+SUHNER connectors are especially developed for board-to-board and board-to-module RF interconnections. The mechanical design is outstanding, allowing the MFBX to cope with mechanical misalignment in radial and axial directions and still hold an excellent electrical performance.

MFBX is a medium float board-to-board connector series which allow besides very good board-to-board shielding values very small board-to-board distances.

Content

Description 69
Design guideline 70
Technical data 71
PCB connectors 72
Adaptors within series 73
Receptacle with solder end 73

Characteristics	Requirements
Frequency	DC to 6 GHz
Axial float (misalignment)	± 0.8 mm
Radial float (misalignment)	± 0.8 mm
Min. board-to-board distance	13 mm
Power	typical 130 W at 2.4 GHz at room temperature

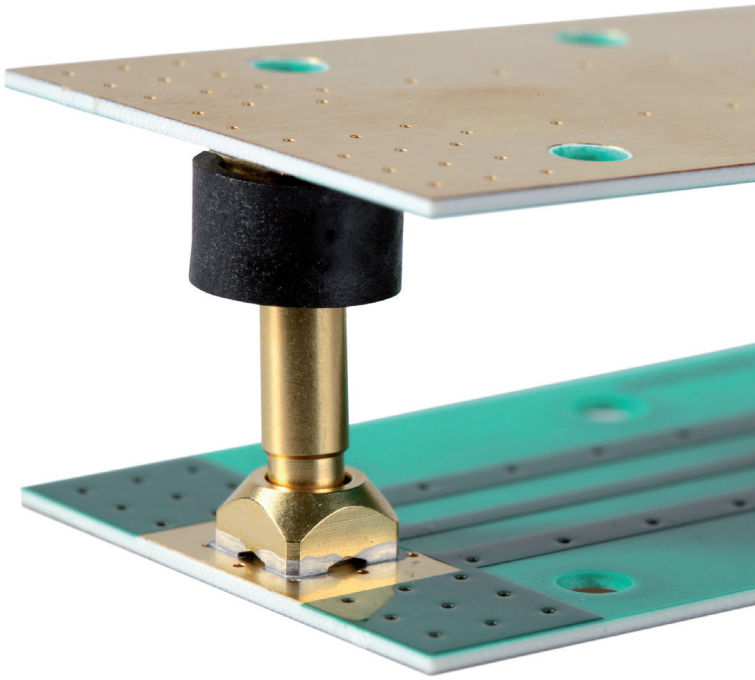

Series MFBX – design guideline

Working range (axial and radial)

In mated condition, the two PCB connector have to be aligned within the dimension given for the axial and radial working range.

The axial working range is ± 0.8 mm, the radial working range is ± 0.8 mm and allows a sufficient electrical and mechanical connection.

Connecting range

The two PCB connector have to be aligned within the dimension given for connecting range. The connecting range is ± 0.8 mm and is equivalent to the max. allowed misalignment between two PCB boards when mating.

Blind mateability is given when keeping the misalignment of two boards within specified connecting range. Blind mateability depends on the funnel size, the barrel length and the angle of the barrel. The HUBER+SUHNER specified connecting range includes all these variables and guarantees therefore blind mateability.

Recommendation

HUBER+SUHNER recommends using guiding pins to align the boards within the connecting range and working range. Distance holders to maintain the axial misalignment within working range are also of benefit.

HUBER+SUHNER provides outline drawings for every application with the relevant mechanical dimensions that need to be considered when designing-in MFBX. 3D STEP files are available on www.hubersuhner.com.

Connecting range

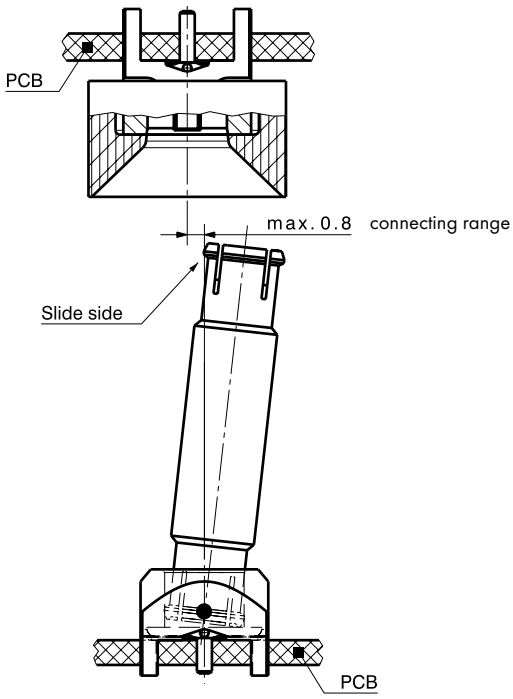

Working range

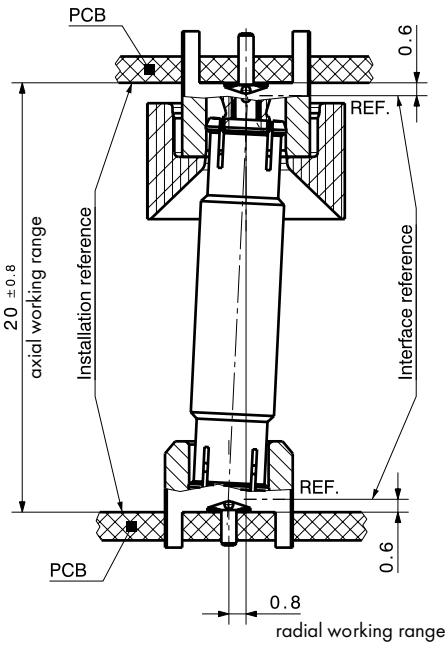

L'IMPULSION | Retrouvez nous sur www.limpulsion.fr

Series MFBX – technical data

MFBX PCB connectors – board-to-board/adaptors within series

Electrical data	Requirements	
Impedance	50 Ω	
Frequency range	DC to 6 GHz	
Dielectric withstanding voltage (at sea level)	1 kV rms, 50 Hz	
Working voltage (at sea level)	≤ 330 V rms, 50 Hz	
Insulation resistance	≥ 1 GΩ	
Contact resistance • Centre contact • Outer contact	 ≤ 5 mΩ ≤ 5 mΩ	
Return loss/VSWR	typical values for a board-to-board connection (measured on a board)	
	axial misalignment	DC to 3.5 GHz
	± 0.8 mm ± 0.4 mm	20 dB/1.22 22 dB/1.17
RF-leakage (interface only)	≥ 60 dB (DC to 3.5 GHz)	
Power (at room temperature)	typical 130 W at 2.4 GHz for board-to-board typical 160 W at 2.4 GHz for board-to-panel	

Mechanical data	Requirements
Engagement force (slide-side)	≤ 15 N/3.4 lbs
Disengagement force (slide-side)	≤ 15 N/3.4 lbs
Durability (matings)	50
Axial float (misalignment)	± 0.8 mm
Radial float (misalignment)	± 0.8 mm

Environmental data	Test conditions
Temperature range	–55 to + 125 °C/–67 to + 257 °F
High temperature endurance	IEC 61169-1 §9.4.5
Rapid change of temperature	IEC 60068-2-14, Test Na
Damp heat steady state	IEC 60068-2-78, Test Ca
Vibration	IEC 60068-2-64, Test Fc
Mechanical shock	IEC 60068-2-27, Test Ea

Processing data	Requirements
Adherent to the print • Shearing • Pulling (vertical to PCB)	 ≥ 150 N/33.7 lbs ≥ 150 N/33.7 lbs

Material data		
Connector parts	Material	Plating
Centre contact	brass/bronze/copper-beryllium alloy	SUCOPRO® gold plating
Outer contact	brass/bronze	SUCOPRO® gold plating/SUCOPLATE®
Body	brass	SUCOPRO® gold plating/SUCOPLATE®
Insulators	LCP/PTFE/PFA	
Funnel	PA	

Performance values are typical for the connector interface. Individual component or connector performance may vary depending on the connector design, attachment (e.g. cable, PCB) or application. For detailed specifications please refer to the specific data sheets on our website www.hubersuhner.com.

Series MFBX – PCB connectors

Straight PCB jacks (female)

Surface mount type SMT

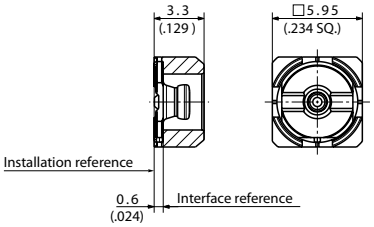

Fig. 1

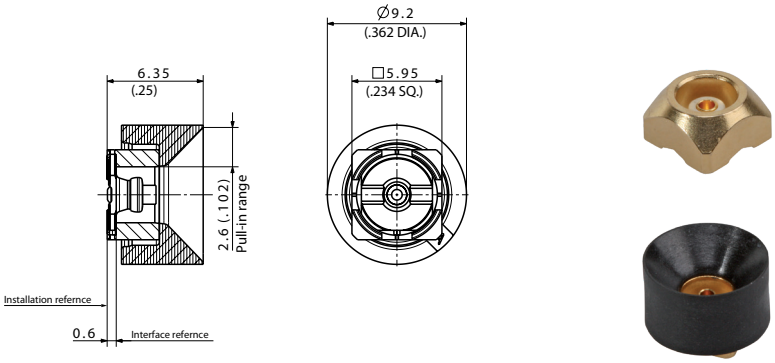

Fig. 2

HUBER+SUHNER type	Item no.	Packaging	Soldering pad	Fig.
82_MFBX-S50-0-8/111_NE 82_MFBX-S50-0-8/111_NM	85025296 85025295	single tape and reel	ML 173	1
82_MFBX-S50-0-6/111_NE 82_MFBX-S50-0-6/111_NM	85025293 85025282	single tape and reel		2

Through hole type THT

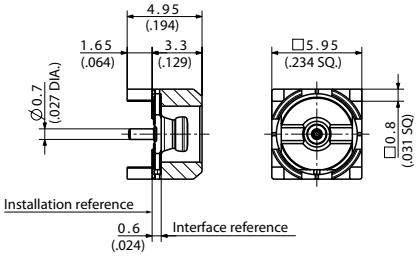

Fig. 1

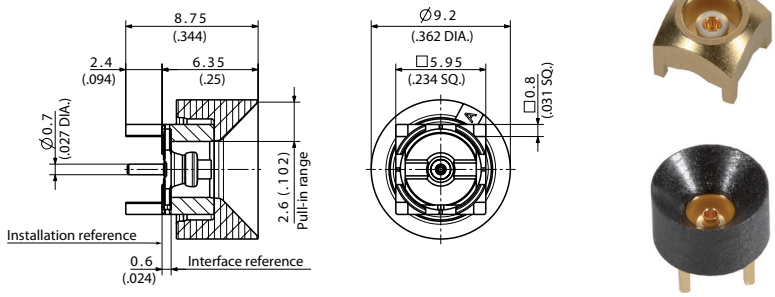

Fig. 2

HUBER+SUHNER type	Item no.	Packaging	Soldering pad	Fig.
82_MFBX-50-0-3/111_NE 82_MFBX-50-0-3/111_NM	85025488 85025089	single tape and reel	ML 182	1
82_MFBX-50-0-4/111_NE 82_MFBX-50-0-4/111_NM	85025490 85025096	single tape and reel		2

Cable groups see page 32 | Assembly tools see page 531 | Mounting holes/PCB layouts see page 561

Series MFBX – adaptors within series

Straight adaptors (machining)

Plug to plug (male)

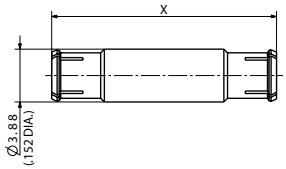



HUBER+SUHNER type	Item no.	Packaging	Board-to-board distance	Adaptor length X
32_MFBX-50-0-1/111_NE	85025361	single	18.9 mm/0.74 in.	16.52 mm/0.65 in.

Straight adaptors (stamp and bending)

Plug to plug (male)

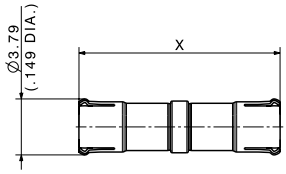



HUBER+SUHNER type	Item no.	Packaging	Board-to-board distance	Adaptor length X
32_MFBX-50-0-3/111_NH-2	85096448	bulk 1000 pcs	16 mm/0.63 in.	13.62 mm/0.54 in.
32_MFBX-50-0-4/111_NH-2	85096450	bulk 1000 pcs	22.3 mm/0.88 in.	19.92 mm/0.78 in.

Series MFBX – receptacle with solder end

Receptacle, jack (female)

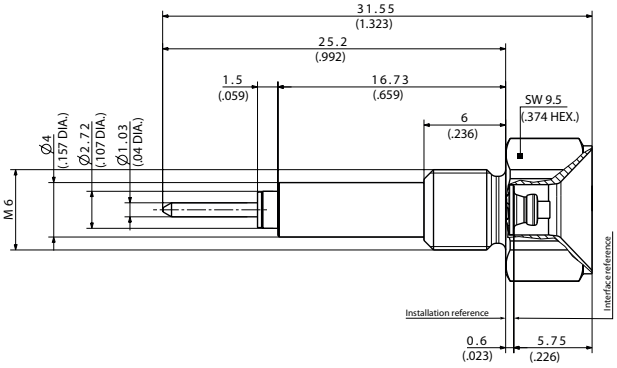



HUBER+SUHNER type	Item no.	Packaging	Assembly instruction
22_MFBX-50-0-3/133_NY	85013940	industrial 100 pcs.	screwed-in

Cable groups see page 32 | Assembly tools see page 531 | Mounting holes/PCB layouts see page 561

L'IMPULSION
Retrouvez nous sur
www.limpulsion.fr

L'IMPULSION
Retrouvez nous sur
www.limpulsion.fr

Series MMBX – micro miniature board connectors

Description

HUBER+SUHNER MMBX connectors are especially developed for board-to-board and board-to-module RF interconnections. Along with MBX the board-to-board portfolio of HUBER+SUHNER provides highest flexibility for today´s and future radio module applications.

MMBX connectors offer an operation frequency up to 12.4 GHz. The series contains of a wide range of board and cable connectors with a minimum board-to-board distance of only 6.7 mm.

Content

Description	75
Design guideline	76
Technical data	77
PCB connectors	79
Adaptors within series	82
Cable connectors	83
Receptacles with solder end	83
Assembly and disassembly tools	84

Characteristics	Requirements
Frequency	DC to 12.4 GHz
Axial float (misalignment)	± 0.3 mm
Radial float (misalignment)	depending on the adaptor ± 0.4 mm (at 6.7 mm board-to-board distance)
Minimum board-to-board distance	6.7 mm
Minimum panel-to-board distance	4.63 mm
Minimum panel-to-panel distance	2.56 mm
Power	typical 260 W at 2.4 GHz at room temperature

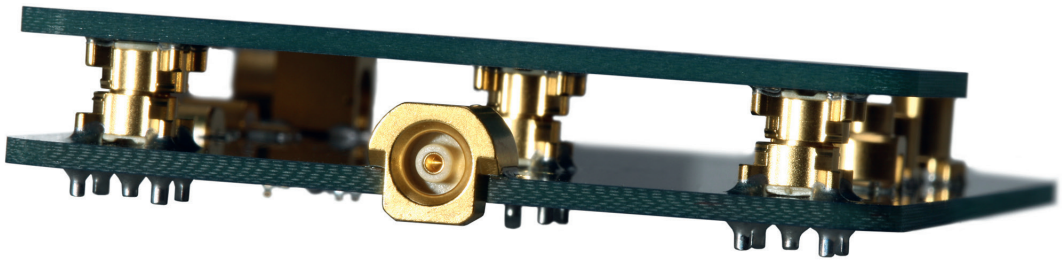

L'IMPULSION
Retrouvez nous sur
www.limpulsion.fr

Series MMBX – design guideline

Working range (axial and radial)

In mated condition, the two PCB connector have to be aligned within the dimension given for the axial and radial working range.

The axial working range is ± 0.3 mm, the radial working range at a board-to-baord distance of 8 mm is ± 0.4 mm. The radial working range depends on the length of the adaptor: the longer the adaptor, the higher the radial working range.

Connecting range

The two PCB connector have to be aligned within the dimension given for connecting range when mating. In order to guarantee a blind mateable connection, the tilted adaptor will be guided by the funnel of the opposite connector. The connecting range depends on the length of the adaptor and the pull-in range (size of the funnel).

The connecting range in the example below is ± 0.8 mm for a pull-in range of 1.8 mm (see table below). If the funnel (pull-in range) is smaller than 0.95 mm, a blind mateable assembly process is not possible anymore. The radial working range (mated condition) can be different from the connecting range (mating process). The smaller value has to be considered for the design of the board-to-board connection (blind mateability).

Recommendation

HUBER+SUHNER recommends using guiding pins to align the boards within the connecting range and working range. Distance holders to maintain the axial misalignment within working range are also of benefit.

HUBER+SUHNER provides outline drawings for every application with the relevant mechanical dimensions that need to be considered when designing-in MMBX. 3D STEP files are available on www.hubersuhner.com.

Connecting range

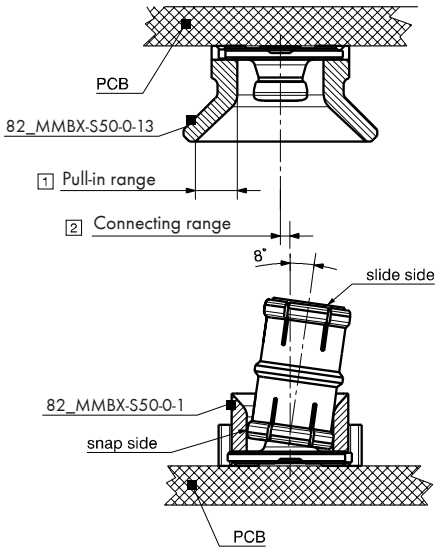

Working range

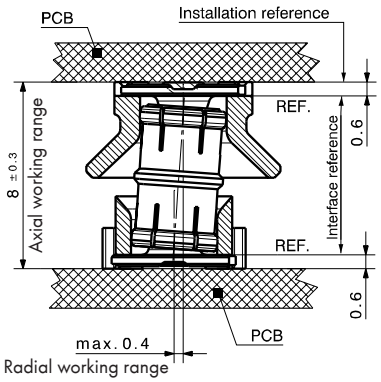

Pull-in range on PCB connector 1	Connecting range 2	PCB connector with mentioned pull-in range (for example)
1.8	max. 0.8	82_MMBX-S50-0-13
0.95	max. 0.15	82_MMBX-S50-0-3
0.65	not possible	82_MMBX-S50-0-1

L'IMPULSION
Retrouvez nous sur
www.limpulsion.fr

Series MMBX – technical data

MMBX PCB connectors – board-to-board/adaptors within series

Electrical data	Requirements		
Impedance	50 Ω		
Frequency range	DC to 12.4 GHz		
Dielectric withstanding voltage (at sea level)	1 kV rms, 50 Hz		
Working voltage (at sea level)	≤ 330 V rms, 50 Hz		
Insulation resistance	≥ 1 GΩ		
Contact resistance • Centre contact • Outer contact	 ≤ 5 mΩ ≤ 1 mΩ		
Return loss/VSWR	typical values for a board-to-board connection		
	board-to-board distance	DC to 2.5 GHz	2.5 to 6 GHz
	6.7 mm 11.65 mm 20.0 mm	26 dB/1.11 26 dB/1.11 26 dB/1.11	25 dB/1.12 19 dB/1.25 19 dB/1.25
RF-leakage (interface only)	≥ 70 dB (DC to 6 GHz) ≥ 60 dB (6 to 12.4 GHz)		
Power	typical 260 W at 2.4 GHz at room temperature		

Mechanical data	Requirements
Engagement force (slide-side)	≤ 15 N/3.4 lbs
Disengagement force (slide-side)	≤ 15 N/3.4 lbs
Durability (matings)	100
Axial float (misalignment)	± 0.3 mm
Radial float (misalignment)	depending on the adaptor length ± 0.4 mm (at 6.7 mm board-to-board distance) ± 0.8 mm (at 11.65 mm board-to-board distance)

Environmental data	Test conditions
Temperature range	–55 to +155 °C/–67 to +311 °F
Climatic category	55/155/21
Thermal shock	MIL-STD-202, method 107 G, condition B1
Moisture resistance	MIL-STD-202, method 106 F
Corrosion	MIL-STD-202, method 101, condition B
Vibration	MIL-STD-202, method 204 D, condition A

Processing data	Requirements
Adherent to the print • Shearing • Pulling (vertical to PCB)	 ≥ 150 N/33.7 lbs ≥ 150 N/33.7 lbs

Material data		
Connector parts	Material	Plating
Centre contact	brass/bronze/copper-beryllium alloy	SUCOPRO® gold plating
Outer contact	brass/bronze	SUCOPRO® gold plating
Body	brass	SUCOPRO® gold plating
Insulators	LCP/PTFE/PFA	

Series MMBX – technical data

MMBX cable connectors

Electrical data	Requirements
Impedance	50 Ω
Frequency range	DC to 12.4 GHz
Dielectric withstanding voltage (at sea level)	750 V rms, 50 Hz
Working voltage (at sea level)	250 V rms, 50 Hz
Insulation resistance	≥ 1 GΩ
Contact resistance • Centre contact • Outer contact	 ≤ 5 mΩ ≤ 1 mΩ
Return loss/VSWR (typical values)	≥ 30 dB/1.07 (DC to 2.5 GHz) ≥ 25 dB/1.12 (2.5 to 6 GHz)

Mechanical data	Requirements
Engagement force	max. 30 N/max. 6.7 lbs
Disengagement force	8 to 30 N/1.8 to 6.7 lbs
Durability (matings)	100

Environmental data	Test conditions
Temperature range	–55 to +155 °C/–67 to +311 °F
Climatic category	55/155/10
Thermal shock	MIL-STD-202, method 107 G, condition B1
Moisture resistance	MIL-STD-202, method 106 F
Corrosion	MIL-STD-202, method 101, condition B
Vibration	MIL-STD-202, method 204 D, condition A

Material data		
Connector parts	**Material**	**Plating**
Centre contact	copper-beryllium alloy	SUCOPRO® gold plating
Outer contact	bronze/copper-beryllium alloy	SUCOPRO® gold plating
Body	brass	SUCOPRO® gold plating/SUCOPLATE®
Crimp ferrules	E-copper	SUCOPRO® gold plating/gold/ SUCOPLATE®
Insulators	PTFE/PFA	

Performance values are typical for the connector interface. Individual component or connector performance may vary depending on the connector design, attachment (e.g. cable, PCB) or application. For detailed specifications please refer to the specific data sheets on our website www.hubersuhner.com.

L'IMPULSION
Retrouvez nous sur
www.limpulsion.fr

Series MMBX – PCB connectors

Straight PCB jacks (female)

- Surface mount type SMT

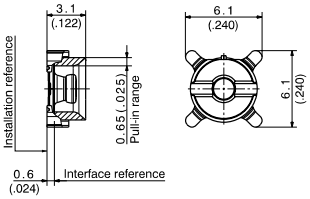

Fig. 1

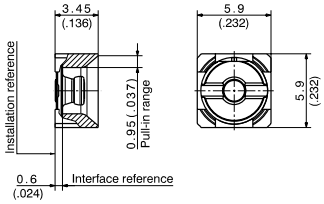

Fig. 2







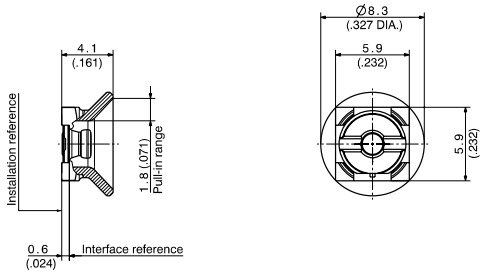

Fig. 3

HUBER+SUHNER type	Item no.	Packaging	Soldering pad	Notes	Fig.
82_MMBX-S50-0-1/111_NE 82_MMBX-S50-0-1/111_NH 82_MMBX-S50-0-1/111_NM	23001785 23001784 23001783	single bulk 100 pcs. tape and reel	ML 122	pull-in range 0.65 mm/0.0256 in.	1
82_MMBX-S50-0-3/111_NE 82_MMBX-S50-0-3/111_NH 82_MMBX-S50-0-3/111_NM	23015527 23011273 23031931	single bulk 100 pcs. tape and reel		pull-in range 0.95 mm/0.0374 in.	2
82_MMBX-S50-0-13/111_NE 82_MMBX-S50-0-13/111_NH 82_MMBX-S50-0-13/111_NM	84032435 23036608 23041511	single bulk 100 pcs. tape and reel		pull-in range 1.80 mm/0.0709 in.	3

Cable groups see page 32 | Assembly tools see page 531 | Mounting holes/PCB layouts see page 561

L'IMPULSION
Retrouvez nous sur
www.limpulsion.fr

Series MMBX – PCB connectors

Straight PCB jacks (female)

- Through hole type THT

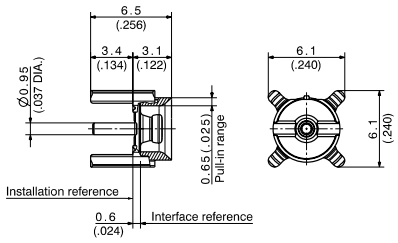

Fig. 1

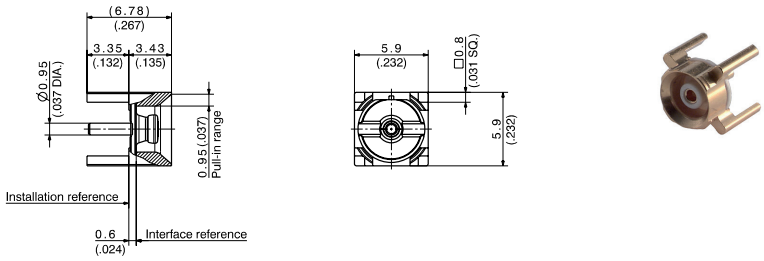

Fig. 2

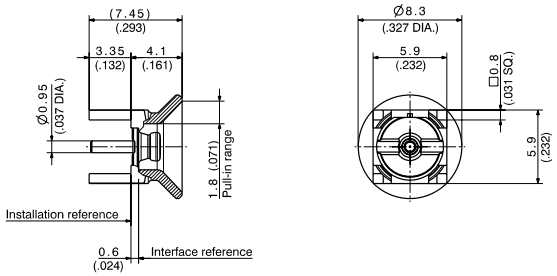

Fig. 3

HUBER+SUHNER type	Item no.	Packaging	Mounting hole	Notes	Fig.
82_MMBX-50-0-2/111_NE 82_MMBX-50-0-2/111_NH 82_MMBX-50-0-2/111_NM	23001788 23001787 23001786	single bulk 100 pcs. tape and reel	ML 15	pull-in range 0.65 mm/0.0256 in.	1
82_MMBX-50-0-4/111_NH	23013667	bulk 100 pcs.		pull-in range 0.95 mm/0.00374 in.	2
82_MMBX-50-0-14/111_NE 82_MMBX-50-0-14/111_NH	84032421 23038051	single bulk 100 pcs.		pull-in range 1.80 mm/0.0709 in.	3

Straight PCB jacks (female), edge mount

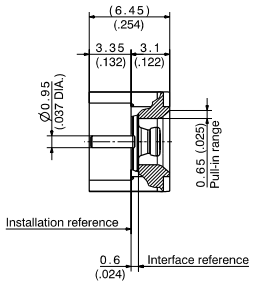



HUBER+SUHNER type	Item no.	Packaging	Mounting hole
92_MMBX-S50-0-12/111_NE 92_MMBX-S50-0-12/111_NM	84019159 23038620	single tape and reel	ML 147

Cable groups see page 32 | Assembly tools see page 531 | Mounting holes/PCB layouts see page 561

L'IMPULSION
Retrouvez nous sur
www.limpulsion.fr

Series MMBX – PCB connectors

Straight PCB plugs (male)

- Surface mount type SMT

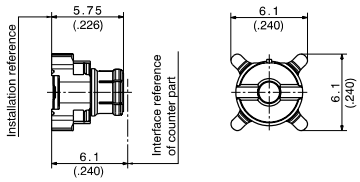



HUBER+SUHNER type	Item no.	Packaging	Soldering pad
81_MMBX-S50-0-1/111_NE	23001782	single	ML 122
81_MMBX-S50-0-1/111_NH	23001781	bulk 100 pcs.	
81_MMBX-S50-0-1/111_NM	23001780	tape and reel	

- Through hole type THT

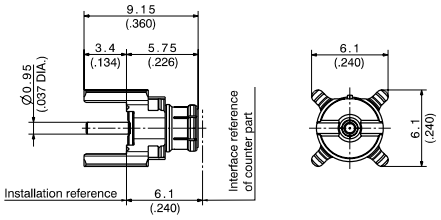

Fig. 1

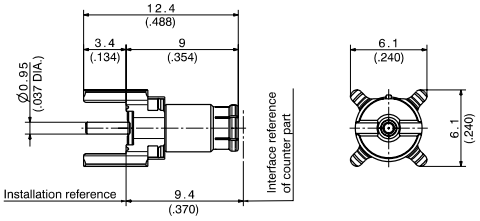

Fig. 2



HUBER+SUHNER type	Item no.	Packaging	Mounting hole	Fig.
81_MMBX-50-0-2/111_NE	23001779	single	ML 15	1
81_MMBX-50-0-2/111_NH	23001778	bulk 100 pcs.		
81_MMBX-50-0-2/111_NM	23001776	tape and reel		
81_MMBX-50-0-11/111_NM	23028072	tape and reel		2

Cable groups see page 32 | Assembly tools see page 531 | Mounting holes/PCB layouts see page 561

L'IMPULSION
Retrouvez nous sur
www.limpulsion.fr

Series MMBX – adaptors within series

Straight adaptors

- Plug to plug (male)

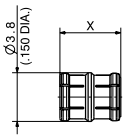



HUBER+SUHNER type	Item no.	Packaging	Board-to-board distance	Adaptor length X	Min. pull-in range
32_MMBX-50-0-1/111_NE 32_MMBX-50-0-1/111_NY	23001749 84028418	single industrial 200 pcs.	6.7 mm/0.264 in.	4.8 mm/0.189 in.	0.65 mm/0.026 in. [1]
32_MMBX-50-0-12/111_NH	84004734	bulk 100 pcs.	8.0 mm/0.315 in.	6.0 mm/0.236 in.	0.95 mm/0.037 in.
32_MMBX-50-0-4/111_NE 32_MMBX-50-0-4/111_NY	23010564 23038658	single industrial 300 pcs.	10.0 mm/0.394 in.	8.0 mm/0.315 in.	1.80 mm/0.071 in.
32_MMBX-50-0-13/111_NE	84031096	single	12.0 mm/0.472 in.	10.0 mm/0.417 in.	1.80 mm/0.071 in.
32_MMBX-50-0-5/111_NE 32_MMBX-50-0-5/111_NY	84026915 23011920	single industrial 200 pcs.	14.0 mm/0.551 in.	12.0 mm/0.472 in.	1.80 mm/0.071 in.
32_MMBX-50-0-10/111_NY	23034946	industrial 200 pcs.	15.0 mm/0.591 in.	13.0 mm/0.512 in.	1.80 mm/0.071 in.

Adaptors with other lengths available upon request.

[1] Only suitable pull-in-range.

Cable groups see page 32 | Assembly tools see page 531 | Mounting holes/PCB layouts see page 561

Series MMBX – cable connectors

Straight cable plugs (male)

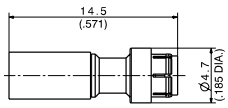



HUBER+SUHNER type	Item no.	Cable group (example)	Packaging	Assembly instruction	Crimp insert
11_MMBX-50-2-2/111_NE	23001744	U4 (ENVIROFLEX_316_D)	single	27351	1/A

Right angle cable plugs (male)

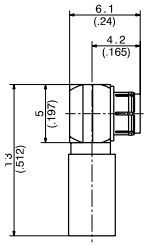



HUBER+SUHNER type	Item no.	Cable group (example)	Packaging	Assembly instruction	Crimp insert
16_MMBX-50-2-2/111_NE 16_MMBX-50-2-2/111_NH	23001746 84028931	U4 (ENVIROFLEX_316_D)	single bulk 100 pcs.	27352	A

Series MMBX – receptacles with solder end

Receptacle, jack (female)

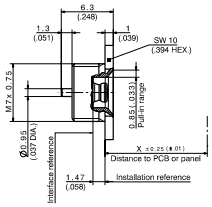

Fig. 1

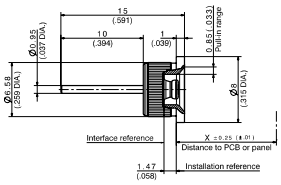

Fig. 2



HUBER+SUHNER type	Item no.	Packaging	Assembly instruction	Fig.
22_MMBX-50-0-1/111_NE	23008312	single	screwed-in	1
22_MMBX-50-0-2/111_NY	84005177	industrial 100 pcs.	pressed-in	2

Cable groups see page 32 | Assembly tools see page 531 | Mounting holes/PCB layouts see page 561

L'IMPULSION
Retrouvez nous sur
www.limpulsion.fr

Series MMBX – assembly and disassembly tools



Fig. 1



Fig. 2

HUBER+SUHNER type	Item no.	Packaging	Operating instruction	Fig.
74_Z-0-0-437	23023494	single	0000189947	1
74_Z-0-0-557	84032418		0000246815	2

Cable groups see page 32 | Assembly tools see page 531 | Mounting holes/PCB layouts see page 561

SMP

Description

HUBER+SUHNER SMP connectors provide a robust plug-in solution for applications up to 40 GHz. HUBER+SUHNER SMP connectors have been MIL-SPEC qualified for defence and space flight hardware. The design of the interface and material treating provides true compatibility as well as guaranteed mechanical performance over the mating life of the connector with all MIL-STD-348 SMP connectors in the market.

Compatibility

50 Ω SMP connectors are intermateable without restrictions.

Content

Description	85
Compatibility	85
Interface dimensions in mm/inches	85
Technical data	86
Cable connectors	88
Panel mount connectors	89
Hermetic shrouts	90
PCB mount connectors	91
Adaptors	92

Interface dimensions (mm/inches)

SMP female

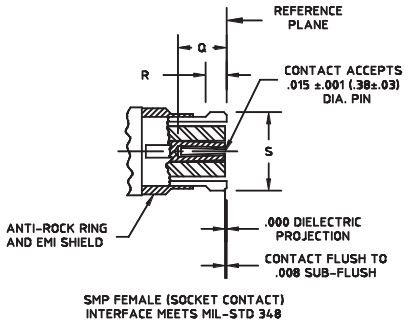

SMP male, full detent

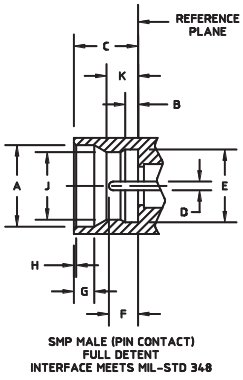

SMP male, limited detent

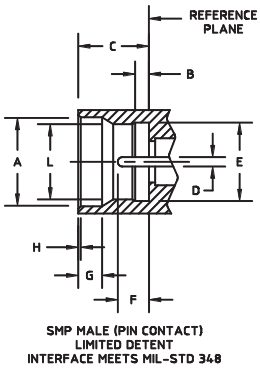

SMP male, smooth bore

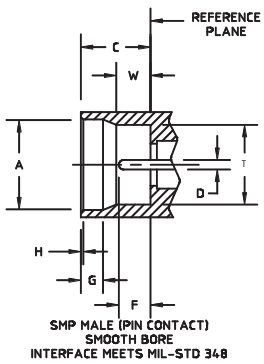

SMP male, catchers mitt

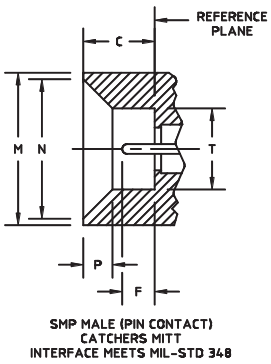

	min.	max.
A	3.53/0.139	3.68/0.145
B	0.521/0.0205	0.597/0.0235
C	2.74/0.108	2.84/0.112
D	0.36/0.014	0.41/0.016
E	3.15/0.124	3.20/0.126
F	1.14/0.045	1.40/0.055
G	0.084/0.033	0.94/0.037
H	0.08/0.003	0.20/0.008
J	2.90/0.114	3.00/0.118
K	1.30/0.051	1.45/0.057
L	3.00/0.118	3.10/0.122
M	5.84/0.230	6.10/0.240
N	5.33/0.210	5.59/0.220
P	1.09/0.043	1.19/0.047
Q	1.77/0.070	-
R	0.63/0.025	0.88/0.035 (cabled connector)
	0.45/0.018	0.63/0.025 (uncabled connector)
S	-	3.43/0.135
T	3.12/0.123	3.22/0.127
W	1.49/0.059	1.65/0.065

Interface dimensions conformable to the following standards:

USA: MIL-PRF-31031
SMP interface MIL-STD-348

L'IMPULSION
Retrouvez nous sur
www.limpulsion.fr

SMP – technical data

Electrical data	Requirements
Impedance	50 Ω
Frequency range	DC to 40 GHz
Contact resistance	center conductor 6.0 milliohms max. outer conductor 2.0 milliohms max.
DWV	500 Vrms at sea level
Insulation resistance	5000 megaohms min.
Corona levels	190 Vrms at 70 000 ft
RF high potential	325 Vrms at 5 MHz
RF leakage	80 dB max. at 3 GHz 65 dB max. at 3 to 26.5 GHz
Magnetic permeability	< 2 Mu
VSWR	Connector specific
Insertion loss	0.06 √f in GHz (non-hermetic connectors) 0.12 √f in GHz (hermetic connectors)

Mechanical data	Requirements
Center contact retention	1.5 lbs (6.672 N) min. (captivated designs)
Durability	100 cycles min. into a full detent shroud 500 cycles min. into a limited detent shroud 1000 cycles min. into a smooth bore shroud
Force to engage	SMP full detent – 15 lbs (66.723 N) max. SMP limited detent – 10 lbs (44.482 N) max. SMP smooth bore – 2 lbs (8.896 N) max.
Force to disengage	SMP full detent – 5 lbs (22.241 N) min. SMP limited detent – 2 lbs (8.896 N) min. SMP smooth bore – 0.5 lbs (2.224 N) min.
Radial misalignment	standard – ± 0.25 mm/0.010 in. min. float mount – ± 0.76 mm /0.030 in. min.
Axial misalignment	standard – 0.25 mm/0.010 in. min. float mount – 1.27 mm/0.050 in. min.

Environmental data	Requirements
Temperature range	–65 to +165 °C
Thermal shock	MIL-STD-202, method 107, condition B
Moisture resistance	MIL-STD-202, method 106
Corrosion	MIL-STD-202, method 101, condition B
Sine vibration	MIL-STD-202, method 204, 28 g peak
Random vibration	MIL-STD-202, method 214, condition K-I, 46.3 g
Shock	MIL-STD-202, method 213, 12 000 g peak

L'IMPULSION | Retrouvez nous sur www.limpulsion.fr

SMP – technical data

Material data		
Cable and shroud connectors	**Material**	**Plating**
Body	beryllium copper per ASTM B- 196 or brass per QQ-B-626	SUCOPRO gold plate
	#303 SS per ASTM A- 582	passivated per SAE-AMS-2700
Contact	beryllium copper per ASTM B-196	SUCOPRO god plate
Dielectric	PTFE per ASTM D-1710, type I, grade 1 or Torlon™ * per ASTM D-5204 or polyether ether ketone per MIL-P_46189, type I or polyetherimide (PEI) per ASTM D-5202	–
Ferrule	brass per ASTM B-135 for cable connector only	SUCOPRO gold plate
Hermetic shroud connectors	**Material**	**Plating**
Body and contact	iron nickel alloy IAW ASTM F-15 and F-1466 UNS K94610 per ASTM F-15, class 1, only for pin on glass seal contacts	gold plate per ASTM B-488, code A, type III over nickel plate per SAE-AMS-QQ-N-290, type 1
Dielectric	Corning 7070 glass or equivalent	–
Adaptors	**Material**	**Plating**
Body and nut	beryllium copper per ASTM B-196 or #303 SS per ASTM A-582	gold plate per ASTM B-488, code C, type II over nickel plate per SAE-AMS-QQ-N-290, class 1
Contact	beryllium copper per ASTM B-196	gold plate per ASTM B-488, code C, type II over nickel plate per SAE-AMS-QQ-N-290, type 1
Dielectric	polytetrafluoroethylene (PTFE) per ASTM D-1710, or ASTM D-4894, type I, grade 1, or polyether ether ketone electrical grade per MIL-P_46189, type I or polyetherimide (PEI) per ASTM D-5202	–

* Note: Torlon™ is not used for space applications.

Performance listed is typical. Individual part configuration may vary. Contact HUBER+SUHNER for more information and specifications by part number. Customer specific factors pertaining to recommended mounting patterns including transmission line topology, substrate thickness and material, board-stackup, operating frequency, etc. must be submitted to HUBER+SUHNER for analysis prior to release of final performance levels and mounting configurations.

L'IMPULSION
Retrouvez nous sur
www.limpulsion.fr

SMP – cable connectors

Straight cable jacks (female)

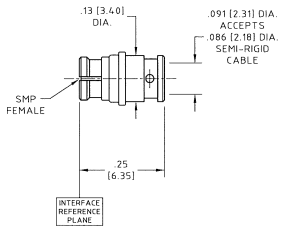

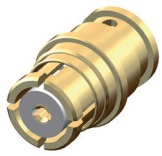

HUBER+SUHNER type	Item no.	Cable group (example)	Typ. return loss	Packaging
21_SMP-50-2-1/111_NE	80377838	Y3, Y16, Y11 (2.18 mm/0.086 in)	DC – 20 GHz: 29 dB 20 – 30 GHz: 27 dB 30 – 40 GHz: 20 dB	single

Right angle cable jack (female)

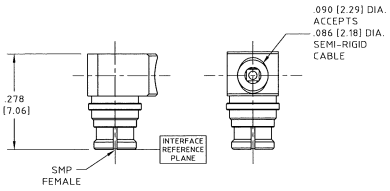

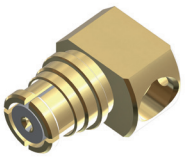

HUBER+SUHNER type	Item no.	Cable group (example)	Typ. return loss	Packaging
26_SMP-50-2-2/111_NE	80377839	Y3, Y16, Y11 (2.18 mm/0.086 in)	DC – 20 GHz: 25 dB 20 – 26.5 GHz: 20 dB 26.5 – 30 GHz: 15 dB 26.5 – 40 GHz: 10 dB	single

Cable groups see page 32 | Assembly tools see page 531 | Mounting holes/PCB layouts see page 561

SMP – panel mount connectors

Straight bulkhead cable plugs (male)

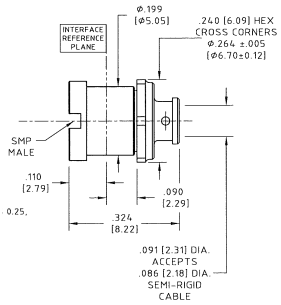

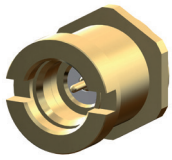

HUBER+SUHNER type	Item no.	Cable group (example)	Typ. return loss	Detent	Packaging
14_SMP-50-2-S2/119_NE	80377975	Y3, Y16, Y11 (2.18 mm/0.086 in)	DC – 20 GHz: 29 dB 20 – 30 GHz: 27 dB 30 – 40 GHz: 20 dB	smooth bore	single
14_SMP-50-2-L2/119_NE	80377974	Y3, Y16, Y11 (2.18 mm/0.086 in)	DC – 20 GHz: 29 dB 20 – 30 GHz: 27 dB 30 – 40 GHz: 20 dB	limited detent	single

Straight panel mount receptacle (male)

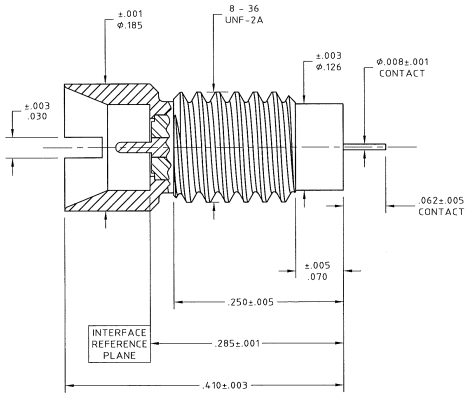



HUBER+SUHNER type	Item no.	Operating frequency	Detent	Pin length	Packaging
12_SMP-50-0-S1/119_NE	80378538	DC – 40 GHz	catchers mitt	0.062"/1.57 mm additional length on request	single

Cable groups see page 32 | Assembly tools see page 531 | Mounting holes/PCB layouts see page 561

SMP – hermetic shrouds

Hermetically sealed, plugs (male)

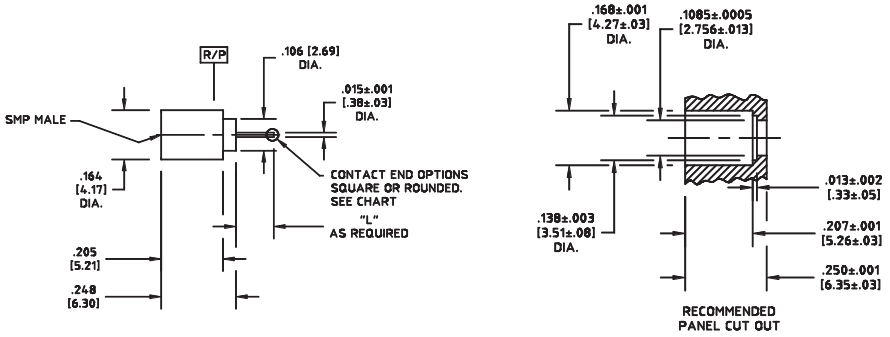



HUBER+SUHNER type	Item no.	"L"	End option
		mm/in	
29474H-1S	80367958	1.25/0.050 additional length on request	square

Cable groups see page 32 | Assembly tools see page 531 | Mounting holes/PCB layouts see page 561

SMP – PCB mount connectors

Straight PCB plugs (male)

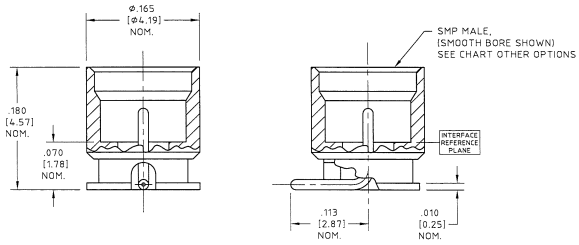



HUBER+SUHNER type	Item no.	Detent	Operating frequency	Return loss	Packaging
81_SMP-S50-0-L1/111_NE	80377946	limited detent	DC – 40GHz	depends on PCB stack-up, contact HUBER+SUHNER	single
81_SMP-S50-0-S1/111_NE	80377947	smooth bore	DC – 40GHz	depends on PCB stack-up, contact HUBER+SUHNER	single

Edge mount PCB plugs (male)

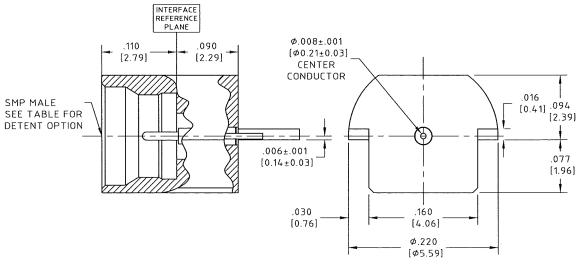

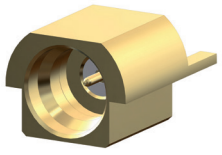

HUBER+SUHNER type	Item no.	Detent	Operating frequency	Return loss	Packaging
91_SMP-50-0-L1/111_NE	80377833	limited detent	DC – 40GHz	depends on PCB stack-up, contact HUBER+SUHNER	single
91_SMP-50-0-S1/111_NE	80377835	smooth bore	DC – 40GHz	depends on PCB stack-up, contact HUBER+SUHNER	single

Cable groups see page 32 | Assembly tools see page 531 | Mounting holes/PCB layouts see page 561

SMP – adaptors

Adaptor SMP jack – 2.9 mm jack (female/female)

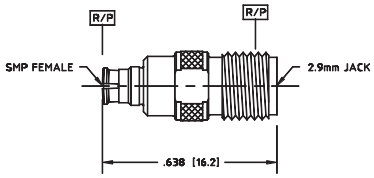

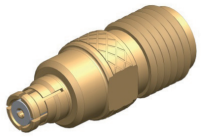

HUBER+SUHNER type	Item no.	Packaging
29487-3	80318039	single

Adaptor SMP jack – 2.9 mm plug (female/male)

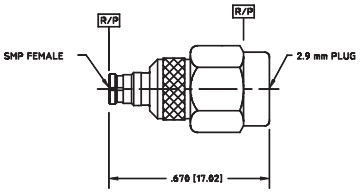

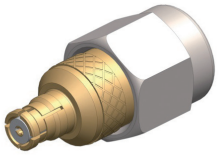

HUBER+SUHNER type	Item no.	Packaging
29487-4	80363059	single

Adaptor SMP plug – 2.9 mm plug (male/male)

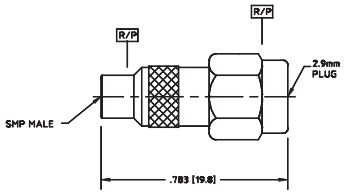

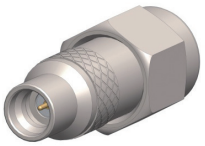

HUBER+SUHNER type	Item no.	Packaging	Detent
29487-1	80318037	single	full

Adaptor/bullet jack/jack (female/female)

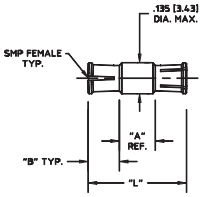

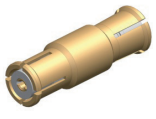

HUBER+SUHNER type	Item no.	Packaging	"A"	Adaptor length X	"B"
31_SMP-50-0-5/111_NE	80377837	single	1.91 mm/0.075"	8.76 mm/0.345"	3.43 mm/0.135"
31_SMP-50-0-6/111_NE	80377836	single	12.45 mm/0.190"	19.30 mm/0.760"	3.43 mm/0.135"

Adaptor length available from 8.76 mm/0.345" up to 19.20 mm/0.760" up on request.

Cable groups see page 32 | Assembly tools see page 531 | Mounting holes/PCB layouts see page 561

SMPM

Description

HUBER+SUHNER SMPM connectors offer remarkable miniaturisation and performance for RF applications up to 65 GHz.
HUBER+SUHNER SMPM connectors are MIL-SPEC qualified for defence and space flight applications.
HUBER+SUHNER also offers the unique bend-to-the-end microbend style cable connectors.
Along with a large portfolio of different SMPM PCB mount connectors that have been designed with optimised PCB trace launch geometries to offer a complete interconnect design solution from «wire-to-trace».

Content

Description	93
Compatibility	93
Interface dimensions in mm/inches	93
Technical data	94
Hermetic shrouds	96
PCB mount connectors	97
Edge mount connectors	98
Adaptors	100
PSM mount connector	101
Launchers	102

Compatibility

50 Ω SMPM connectors are intermateable without restrictions.

Interface dimensions (mm/inches)

SMPM female (socket contact)

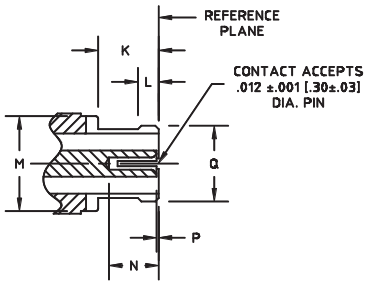

SMPM FEMALE (SOCKET CONTACT)
INTERFACE MEETS MIL-STD-348

SMPM male (pin contact), smooth bore

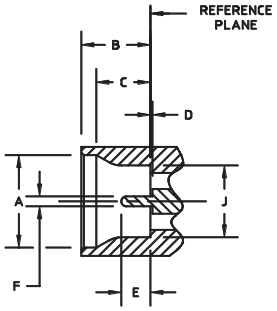

SMPM MALE (PIN CONTACT)
SMOOTH BORE
INTERFACE MEETS MIL-STD-348

SMPM male (pin contact), full detent

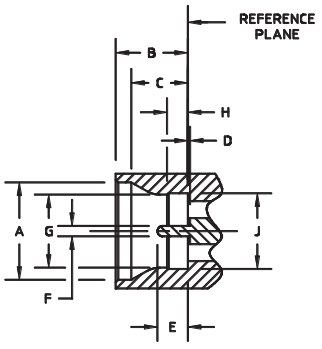

SMPM MALE (PIN CONTACT)
FULL DETENT
INTERFACE MEETS MIL-STD-348

	min.	max.		min.	max.
A	2.82/0.111	2.92/0.115	J	2.18/0.086	2.24/0.088
B	2.08/0.082	2.13/0.084	K	1.73/0.068	-
C	1.57/0.062	1.83/0.072	L	-	0.58/0.023
D	0.00/0.000	-	M	-	2.79/0.110
E	0.76/0.030	1.14/0.045	N	1.27/0.050	-
F	0.28/0.011	0.33/0.013	P	0.00/0.000	0.20/0.008
G	2.11/0.083	2.16/0.085	Q	-	2.41/0.095
H	0.53/0.021	0.58/0.023			

Interface dimensions conformable to the following standards:

USA: MIL-PRF-31031
SMPM interface MIL-STD-348

L'IMPULSION Retrouvez nous sur www.limpulsion.fr

SMPM – technical data

Electrical data	Requirements
Impedance	50 Ω
Frequency range	DC to 65 GHz
Contact resistance	center conductor 6.0 milliohms max. outer conductor 2.0 milliohms max.
DWV	335 Vrms at sea level
Insulation resistance	5000 megaohms min.
Corona levels	125 Vrms at 70 000 ft
RF high potential	200 Vrms at 5 MHz
RF leakage	80 dB max. at 3 GHz 65 dB max. at 3 to 26.5 GHz
Magnetic permeability	< 2 Mu
VSWR	1.1:1 to 26.5 GHz 1.3:1 to 65 GHz
Insertion loss	0.05 + 0.04 √f in GHz (non-hermetic connectors) 0.12 √f in GHz (hermetic connectors)

Mechanical data	Requirements
Center contact retention	1.5 lbs (6.672 N) min. (captivated designs)
Durability	100 cycles min. into a full detent shroud 1000 cycles min. into a smooth bore shroud
Force to engage	SMPM full detent – 3.5 lbs (15.569 N) typical SMPM smooth bore – 1.5 lbs (6.672 N) typical
Force to disengage	SMPM full detent – 5 lbs (22.241 N) typical SMPM smooth bore – 1.5 lbs (6.672 N) typical

Environmental data	Requirements
Temperature range	–65 to +165 °C
Thermal shock	MIL-STD-202, method 107, condition B
Moisture resistance	MIL-STD-202, method 106
Corrosion	MIL-STD-202, method 101, condition B
Sine vibration	MIL-STD-202, method 204, 28 g peak
Random vibration	MIL-STD-202, method 214, condition K-I, 46.3 g
Shock	MIL-STD-202, method 213, 12 000 g peak

L'IMPULSION
Retrouvez nous sur
www.limpulsion.fr

SMPM – technical data

Material data		
Cable and shroud connectors	**Material**	**Plating**
Body and contact	beryllium copper per ASTM B-196	gold plate per ASTM B-488, code C, type II over nickel plate per SAE-AMS-QQ-N-290, type 1
Dielectric	PTFE per ASTM D-1710, type I, grade 1 or Torlon™* per ASTM D-5204 or polyether ether ketone per MIL-P_46189, type I or polyetherimide (PEI) per ASTM D-5202	–
Shroud	#303 SS per ASTM A-582	passivated per SAE-AMS-2700
Hermetic shroud connectors	**Material**	**Plating**
Body and contact	iron nickel alloy IAW ASTM F-15 and F-1466 UNS K94610 per ASTM F-15, class 1, only for pin on glass seal contacts	gold plate per ASTM B-488, code A, type III over nickel plate per SAE-AMS-QQ-N-290, type 1
Dielectric	Corning 7070 glass or equivalent	–
Adaptors	**Material**	**Plating**
Body	beryllium copper per ASTM B-196 or #303 SS per ASTM A-582	gold plate per ASTM B-488, code C, type II over nickel plate per SAE-AMS-QQ-N-290, type 1
Contact	beryllium copper per ASTM B-196	gold plate per ASTM B-488, code C, type II over nickel plate per SAE-AMS-QQ-N-290, type 1
Dielectric	PTFE per ASTM D-1710, type I, grade 1 or polyether ether ketone per MIL-P_46189, type I or polyetherimide (PEI) per ASTM D-5202	–

* Note: Torlon™ is not used for space applications.

Performance listed is typical. Individual part configuration may vary. Contact HUBER+SUHNER for more information and specifications by part number. Customer specific factors pertaining to recommended mounting patterns including transmission line topology, substrate thickness and material, board-stackup, operating frequency, etc. must be submitted to HUBER+SUHNER for analysis prior to release of final performance levels and mounting configurations.

SMPM – hermetic shrouds

Hermetically sealed, plugs (male)

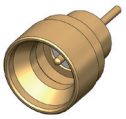

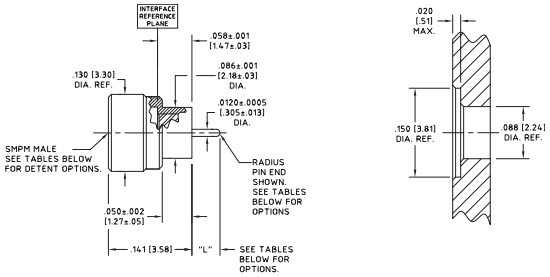

HUBER+SUHNER type	Item no.	"L"	End option	Detent
		mm/in		
29972H1-2-030S	80376464	0.762/0.030	square	full
29972H1-2-050S	80376465	1.270/0.050	square	full
29972H1-2-060S	80395460	1.524/0.060	square	full
29972H1-2-070S	80395461	1.778/0.070	square	full
29972H1-2-090S	80395462	2.286/0.090	square	full
29972H1-4-030S	80395463	0.762/0.030	square	smooth bore
29972H1-4-050S	80395464	1.270/0.050	square	smooth bore
29972H1-4-060S	80395465	1.524/0.060	square	smooth bore
29972H1-4-070S	80395466	1.778/0.070	square	smooth bore
29972H1-4-090S	80395467	2.286/0.090	square	smooth bore

Cable groups see page 32 | Assembly tools see page 531 | Mounting holes/PCB layouts see page 561

SMPM – PCB mount connectors

Straight PCB plugs (male)

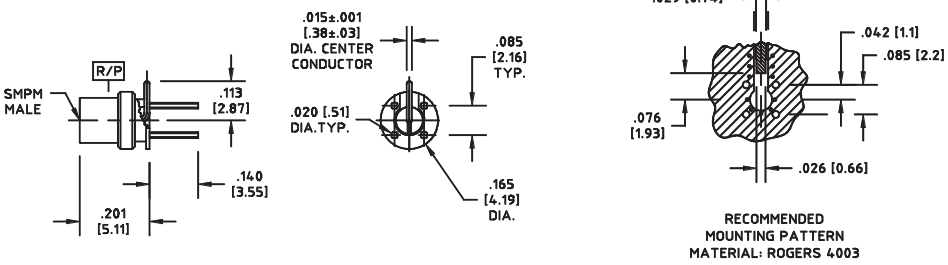

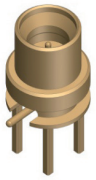

HUBER+SUHNER type	Item no.	Detent
29972S1-2-001	80367473	full
29972S1-4-001	80367474	smooth bore

Straight PCB plugs (male)

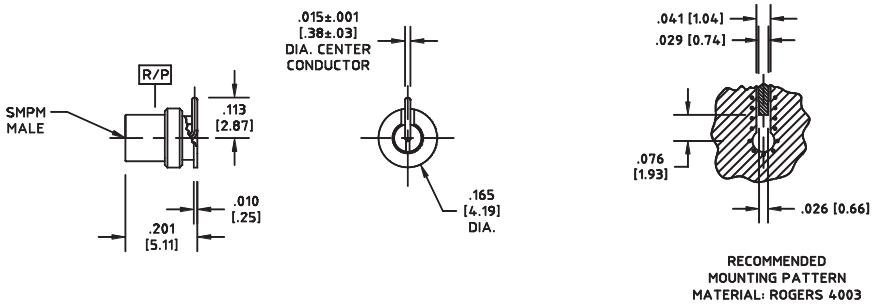

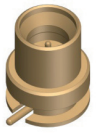

HUBER+SUHNER type	Item no.	Detent
29972SM-2-001	80367475	full
29972SM-4-001	80367476	smooth bore

Straight PCB plugs (male)

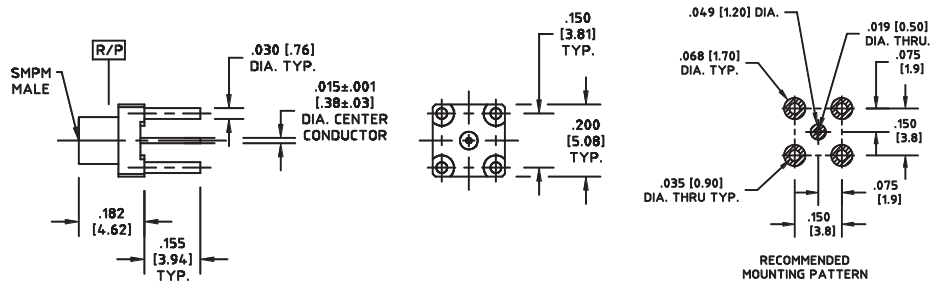

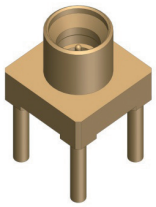

HUBER+SUHNER type	Item no.	Detent
29972T1-2-155	80395469	full
29972T1-4-155	80395470	smooth bore

Cable groups see page 32 | Assembly tools see page 531 | Mounting holes/PCB layouts see page 561

SMPM – edge mount connectors

29972CB4-003A/B – edge mount

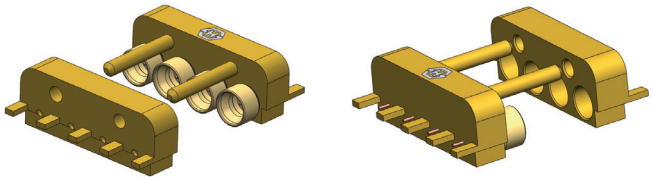

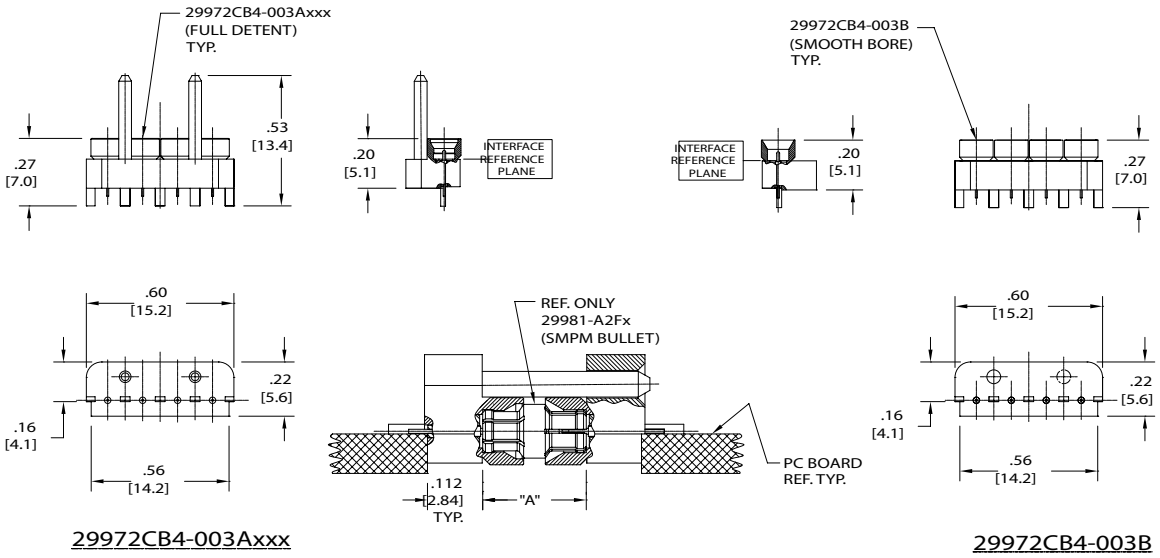

29972CB4-003Axxx

29972CB4-003B

4 CHANNEL PC BOARD TO PC BOARD CONNECTOR BLOCKS WITH BULLET

HUBER+SUHNER type	Item no.	Detent
29972CB4-003A	80351053	full
29972CB4-003B	80351054	smooth bore

Edge mount PCB plugs (male)

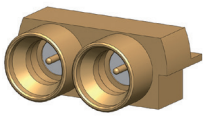

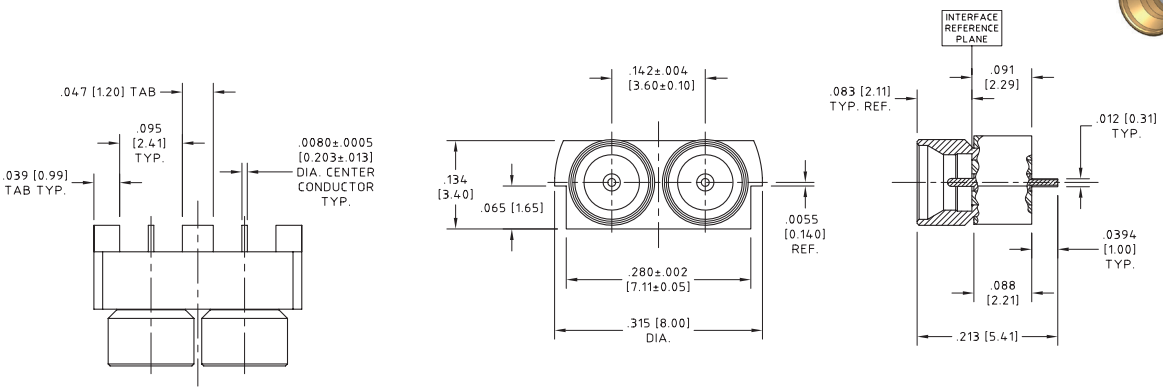

HUBER+SUHNER type	Item no.	Detent
29972CB2-2-002	80376772	full
29972CB2-4-002	80376773	smooth bore

Cable groups see page 32 | Assembly tools see page 531 | Mounting holes/PCB layouts see page 561

SMPM – edge mount connectors

Edge mount PCB plugs (male)

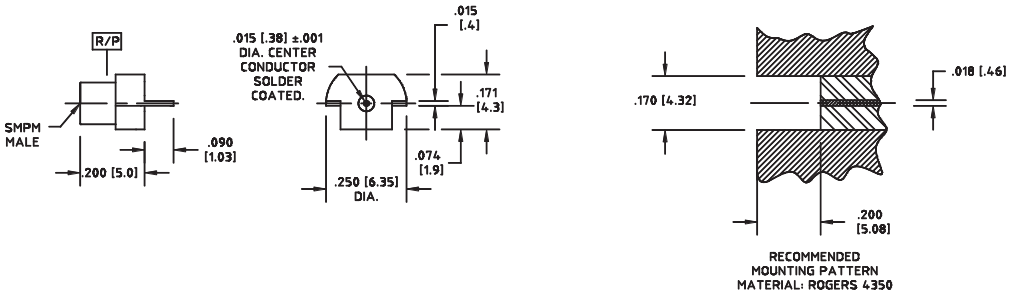

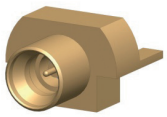

HUBER+SUHNER type	Item no.	Detent
29972BM-2-002	80395471	full
29972BM-4-002	80362691	smooth bore

Edge mount PCB plugs (male)

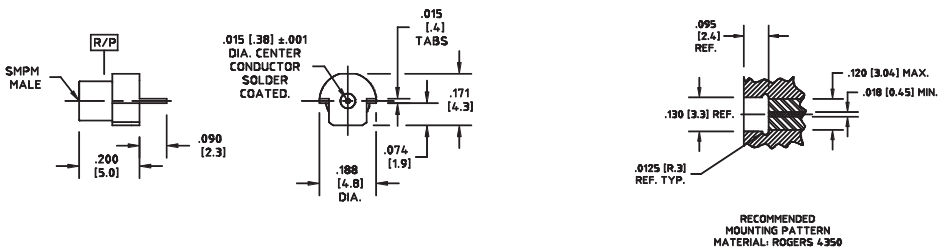

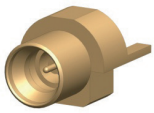

HUBER+SUHNER type	Item no.	Detent
29972BM-2-004	80395472	full
29972BM-4-004	80395473	smooth bore

Edge mount PCB plugs (male)

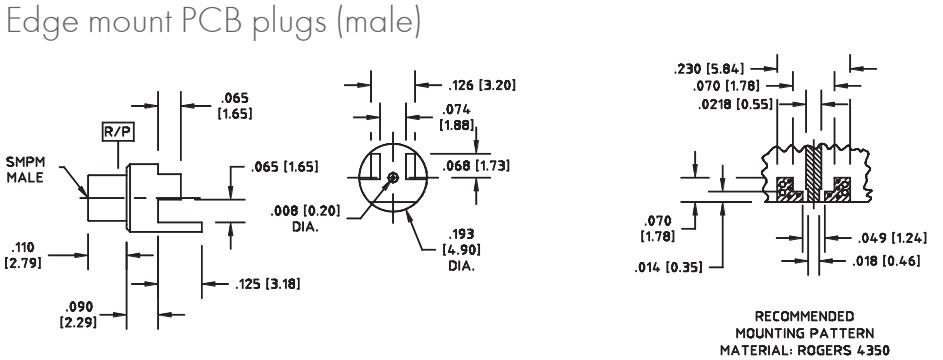



HUBER+SUHNER type	Item no.	Detent
29972EM-2-001	80395474	full
29972EM-4-001	80377148	smooth bore

Cable groups see page 32 | Assembly tools see page 531 | Mounting holes/PCB layouts see page 561

L'IMPULSION Retrouvez nous sur www.limpulsion.fr

SMPM – adaptor

Adaptor jack/jack (female/female)

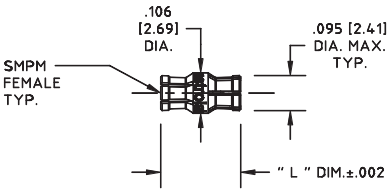

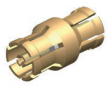

HUBER+SUHNER type	Packaging	Adaptor length L
		mm/in
29981-A2F1	individual	5.33/0.210
29981-A2F2	individual	12.7/0.500
29981-A2F3	individual	6.45/0.254
29981-A2F5	individual	8.483/0.334
29981-A2F6	individual	15.367/0.605
29981-A2F8	individual	11.303/0.445
29981-A2F11	individual	5.359/0.211

Note: Adaptors to other interfaces can be found in the section SMPM-T (page 112).
The SMPM-T plug (male) to SK adaptors can also be used to connect SMPM.

Cable groups see page 32 | Assembly tools see page 531 | Mounting holes/PCB layouts see page 561

SMPM – PSM mount connectors

29972CB8-002A/B – edge mount

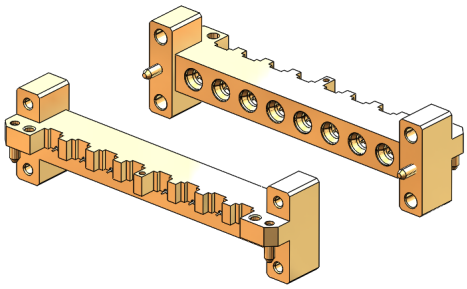

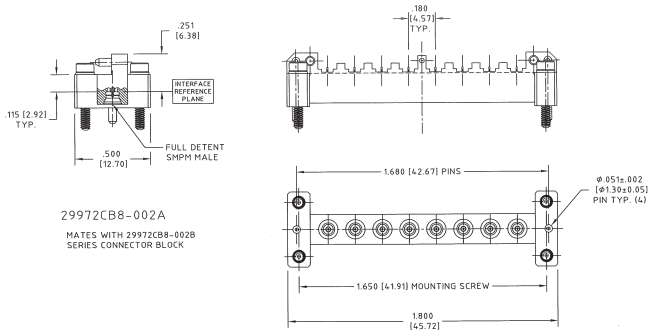

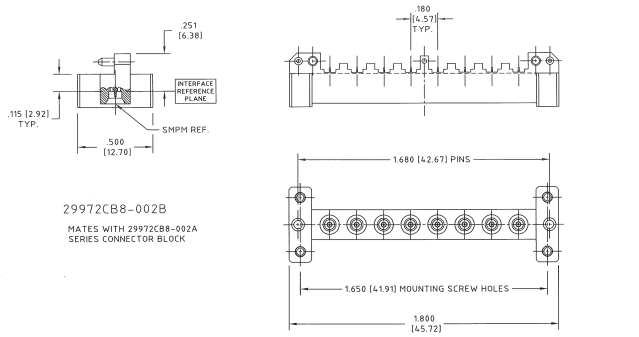

HUBER+SUHNER type	Detent
29972CB8-002A	full
29972CB8-002B	smooth bore

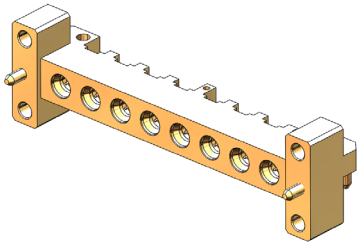

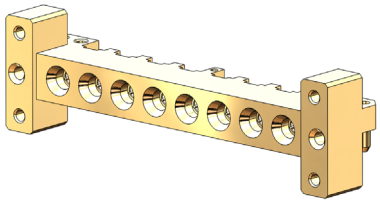

Cable groups see page 32 | Assembly tools see page 531 | Mounting holes/PCB layouts see page 561

L'IMPULSION
Retrouvez nous sur
www.limpulsion.fr

SMPM – launchers

29972CB4-003A – launcher, male connector housing

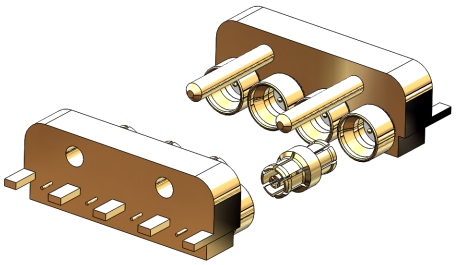

HUBER+SUHNER type	Detent	SMPM bullet	«A» dimension
			mm/in
29972CB4-003A210	full	29981-A2F1	5.334/0.210
29972CB4-003A500	full	29981-A2F2	12.700/0.500
29972CB4-003A254	full	29981-A2F3	6.451/0.254
29972CB4-003A334	full	29981-A2F5	8.483/0.334
29972CB4-003A605	full	29981-A2F6	15.367/0.605
29972CB4-003A445	full	29981-A2F8	11.303/0.445
29972CB4-003A211	full	29981-A2F11	5.359/0.211

Cable groups see page 32 | Assembly tools see page 531 | Mounting holes/PCB layouts see page 561

L'IMPULSION | Retrouvez nous sur www.limpulsion.fr

SMPM – launchers

29972CB4-003B – launcher, male connector housing

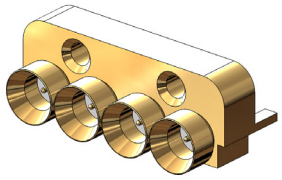

HUBER+SUHNER type	Item no.	Detent
29972CB4-003B	80351054	smooth bore

29972CB4-004

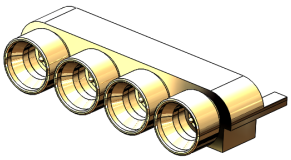

HUBER+SUHNER type	Item no.	Detent
29972CB4-004	80392618	full

29972CB8-003B-001

HUBER+SUHNER type	Item no.	Detent
29972CB8-003B-001	80379105	
29972CB8-003A	80396343	smooth bore

Cable groups see page 32 | Assembly tools see page 531 | Mounting holes/PCB layouts see page 561

L'IMPULSION
Retrouvez nous sur
www.limpulsion.fr

Series SMPM-T

Description

The SMPM-T is the smallest threaded open source connector on the market. Its unique and innovative combination of a MIL-STD-348 SMPM female interface connector together with a retractable threaded nut provides an integrated solution offering unprecedented electrical and mechanical performance. The SMPM-T handles high density requirements with a connector centerline-to-centerline spacing of just 5 mm (0.20 in) while offering unmatched electrical stability at frequencies up to 65 GHz in even the harshest operating environments.

The SMPM-T connector is available along with HUBER+SUHNER's industry driving microbend «bend-to-the-end» technology that is already qualified for any aerospace application. The SMPM-T connector complies with the hi-rel material restrictions of NASA while still offering full compliance with RoHS and REACH legislation in the commercial market.

Compatibility

50 Ω SMPM-T connectors are intermateable without restrictions.

Content

Description	105
Compatibility	105
Interface dimensions in mm/inches	105
Technical data	106
Cable connectors	108
Hermetic shrouds	108
Panel mount connectors	109
PCB mount connectors	109
Edge mount connectors	112
Adaptors	112

Interface dimensions (mm/inches)

SMPM-T female (socket contact)

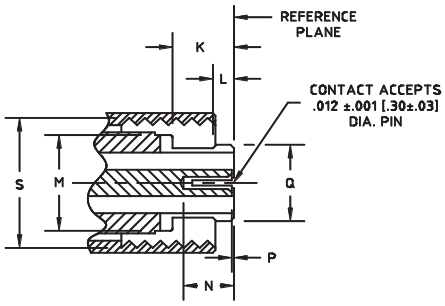

SMPM-T FEMALE (SOCKET CONTACT)
INTERFACE MEETS MIL-STD-348

SMPM-T male (pin contact), smooth bore

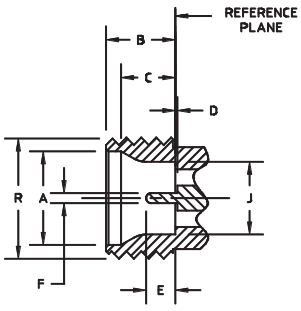

SMPM-T MALE (PIN CONTACT)
SMOOTH BORE
INTERFACE MEETS MIL-STD-348

SMPM-T male (pin contact), full detent

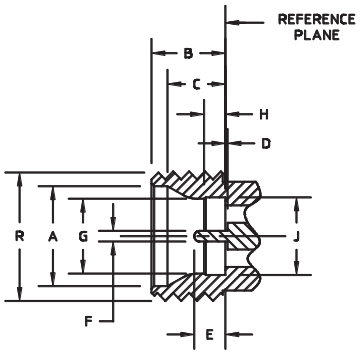

SMPM-T MALE (PIN CONTACT)
FULL DETENT
INTERFACE MEETS MIL-STD-348

	min.	max.		min.	max.
A	2.82 /0.111	2.92/0.115	K	1.73/0.068	-
B	2.08/0.082	2.13/0.084	L	-	0.58/0.023
C	1.57/0.062	1.83/0.072	M	-	2.79/0.110
D	0.00/0.000	-	N	1.27/0.050	-
E	0.76/0.030	1.14/0.045	P	0.00/0.000	0.20/0.008
F	0.28/0.011	0.33/0.013	Q	-	2.41/0.095
G	2.11/0.083	2.16/0.085	R	-	3.66/0.145
H	0.53/0.021	0.58/0.023	S	3.30/0.130	-
J	2.18/0.086	2.24/0.088			

Interface dimensions conformable to the standards:

USA: MIL-PRF-31031
SMPM interface MIL-STD-348

L'IMPULSION
Retrouvez nous sur
www.limpulsion.fr

SMPM-T – technical data

Electrical data	Requirements
Impedance	50 Ω
Frequency range	DC to 65 GHz
Contact resistance	center conductor 6.0 milliohms max. outer conductor 2.0 milliohms max.
DWV	335 Vrms at sea level
Insulation resistance	5000 megaohms min.
Corona levels	125 Vrms at 70 000 ft
RF high potential	200 Vrms at 5 MHz
RF leakage	–80 dB max. at 3 GHz –65 dB max. at 3 to 26.5 GHz
Magnetic permeability	< 2 Mu
VSWR	1.1:1 to 26.5 GHz 1.3:1 to 65 GHz
Insertion loss	0.05 + 0.04 √f in GHz (non-hermetic connectors) 0.12 √f in GHz (hermetic connectors)

Mechanical data	Requirements
Center contact retention	1.5 lbs (0.68 kg) min. (captivated designs)
Durability	100 cycles min. into a full detent shroud 1000 cycles min. into a smooth bore shroud
Force to engage	SMPM full detent – 3.5 lbs (1.59 kg) typical SMPM smooth bore – 1.5 lbs (0.68 kg) typical
Force to disengage	SMPM full detent – 5 lbs (2.27 kg) typical SMPM smooth bore – 1.5 lbs (0.68 kg) typical
Mating torque	22 ± 2 in-oz (0.016 ± 0.001 m-kg)

Environmental data	Requirements
Temperature range	–65 to +165 °C
Thermal shock	MIL-STD-202, method 107, condition B
Moisture resistance	MIL-STD-202, method 106
Corrosion	MIL-STD-202, method 101, condition B
Sine vibration	MIL-STD-202, method 204, 28g peak
Random vibration	MIL-STD-202, method 214, condition K-I, 46.3 grms
Shock	MIL-STD-202, method 213, 12 000 g peak

L'IMPULSION | Retrouvez nous sur www.limpulsion.fr

SMPM-T – technical data

Material data		
Cable and shroud connectors	**Material**	**Plating**
Body and contact	beryllium copper per ASTM B-196	gold plate per ASTM B-488, code C, type II over nickel plate per SAE-AMS-QQ-N-290, type II, class 1
Dielectric	PTFE per ASTM D-1710, type I, grade 1, polyamide-imide per ASTM D-5204 or polytherimide (PEI) per ASTM D-5205 or PEEK per MIL-P-46183, type I	–
Hermetic shroud connectors	**Material**	**Plating**
Body and contact	nickel-cobalt ferrous alloy per ASTM F-15, class 1	gold plate per ASTM B-488, code A, type III over nickel plate per SAE-AMS-QQ-N-290, type II, class 1
Dielectric	Corning 7070 glass or equivalent	–
Adaptors	**Material**	**Planting**
Body and nut	#303 SS per ASTM A-582	gold plate per ASTM B-488, code C, type II over nickel plate per SAE-AMS-QQ-N-290, type II, class 1
Contact	beryllium copper per ASTM B-196	gold plate per ASTM B-488, code C, type II over nickel plate per SAE-AMS-QQ-N-290, type II, class 1
Dielectric	PTFE per ASTM D-1710, type I, grade 1 and poly-therimide (PEI) per ASTM D-5205	–

Performance listed is typical. Individual part configuration may vary. Contact HUBER+SUHNER for more information and specifications by part number. Customer specific factors pertaining to recommended mounting patterns including transmission line topology, substrate thickness and material, board-stackup, operating frequency, etc. must be submitted to HUBER+SUHNER for analysis prior to release of final performance levels and mounting configurations.

SMPM-T – cable connectors

Straight cable jacks (female)

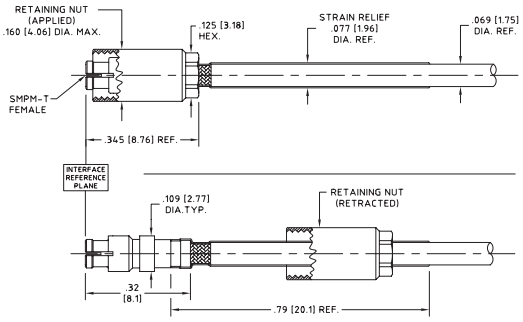



HUBER+SUHNER type	Item no.	Cable group (example)	Packaging	Cable dia.
				mm/in
29971T-MF53	80376818	Y3, Y16, Y11 (2.18 mm/0.086 in)	single	1.96/0.077

SMPM-T – hermetic shrouds

Hermetically sealed, plugs (male)

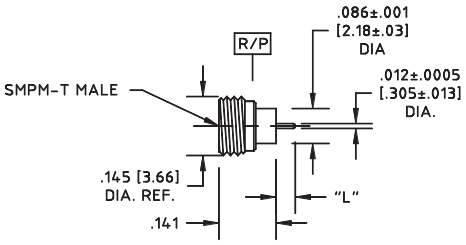

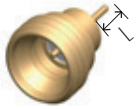

HUBER+SUHNER type	Item no.	Contact length "L"	Detent	End option
		mm/in		
29976H1-2-060S	80362701	1.52/0.06	full	square
29976H1-2-090S	80362703	2.28/0.09	full	square
29976H1-4-060S	80362705	1.52/0.06	smooth bore	square
29976H1-4-090S	80362707	2.28/0.09	smooth bore	square

Cable groups see page 32 | Assembly tools see page 531 | Mounting holes/PCB layouts see page 561

SMPM-T – panel mount connectors

Straight bulkhead receptacles, plug (male)

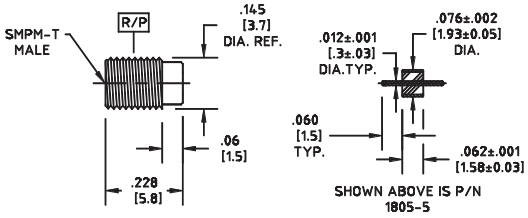

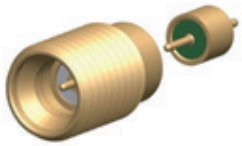

Bead as shown on picture sold separately.

HUBER+SUHNER type	Item no.	Detent
29976TSP-2-005	80370422	full
29976TSP-4-005	80374421	smooth bore

SMPM-T – PCB mount connectors

Straight PCB plugs (male)

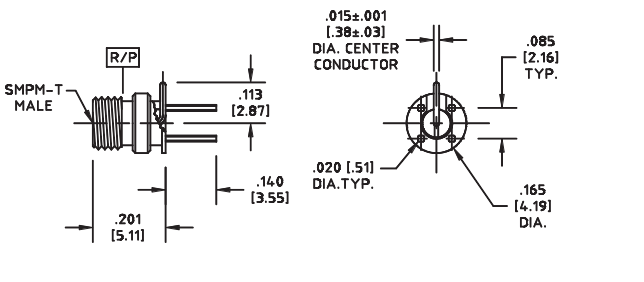

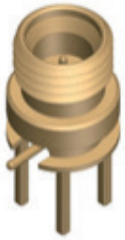

HUBER+SUHNER type	Item no.	Detent
29976S1-2-140	80362694	full
29976S1-4-140	80362695	smooth bore

Cable groups see page 32 | Assembly tools see page 531 | Mounting holes/PCB layouts see page 561

SMPM-T – PCB mount connectors

Right angle PCB plugs (male)

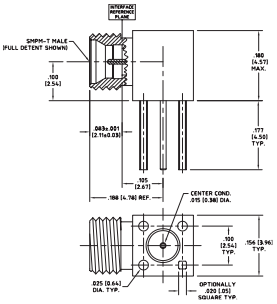

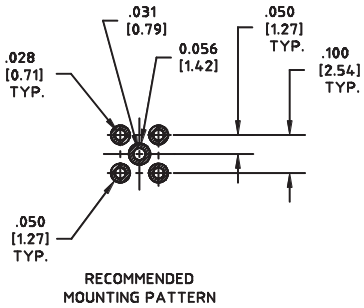

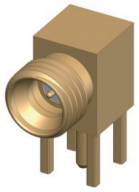

HUBER+SUHNER type	Item no.	Detent
29976RA-2-001	80374263	full
29976RA-4-001	80374264	smooth bore

Straight PCB plugs (male)

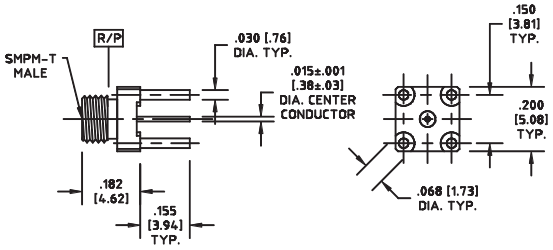

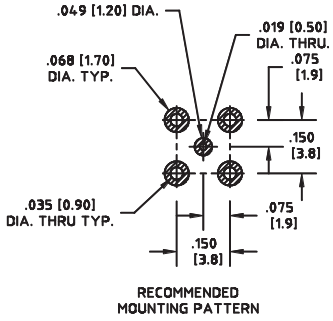

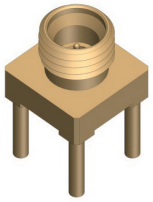

HUBER+SUHNER type	Item no.	Detent
29976T1-2-155	80366706	full
29976T1-4-155	80370524	smooth bore

Straight PCB plugs (male)

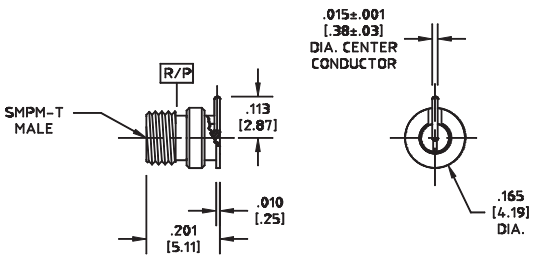

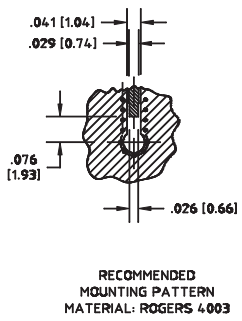



HUBER+SUHNER type	Item no.	Detent
29976SM-2-001	80362696	full
29976SM-4-001	80362697	smooth bore

Cable groups see page 32 | Assembly tools see page 531 | Mounting holes/PCB layouts see page 561

SMPM-T – PCB mount connectors

Straight PCB plugs (male)/reverse mount

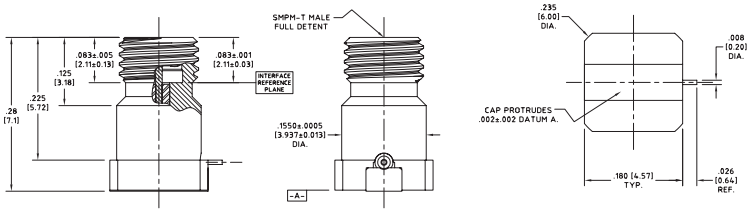

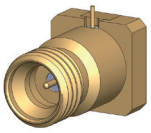

HUBER+SUHNER type	Item no.	Detent
29976TRM-2-001	80374144	full
29976TRM-4-001	80395475	smooth bore

Right angle PCB plugs (male)

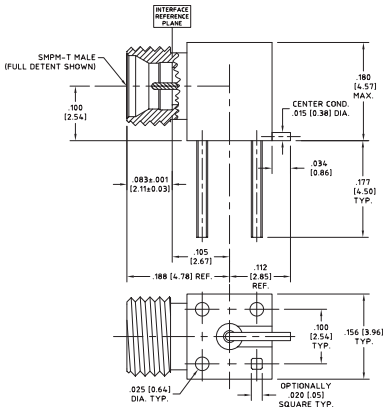

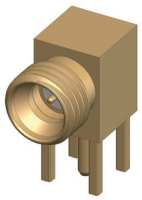

HUBER+SUHNER type	Item no.	Detent
29976RA-2-003	80376679	full
29976RA-4-003	80376680	smooth bore

Cable groups see page 32 | Assembly tools see page 531 | Mounting holes/PCB layouts see page 561

SMPM-T – edge mount connectors

Edge mount PCB plugs (male)

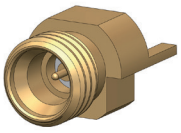

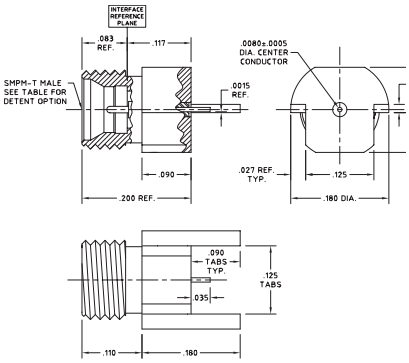

HUBER+SUHNER type	Item no.	Detent
29976BM-2-006	80367075	full
29976BM-4-006	80367222	smooth bore

SMPM-T – adaptors

Adaptor SMPM-T plug – SK (2.92 mm standard) plug (male/male)

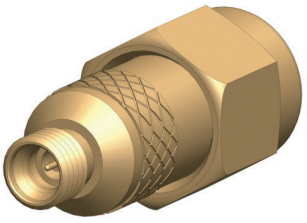

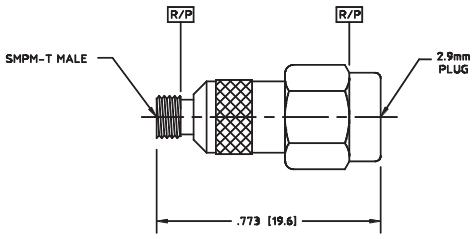

HUBER+SUHNER type	Item no.	Packaging	Detent
29429-1T2	80317870	single	full

Adaptor SMPM-T plug – SK (2.92 mm standard) jack (male/female)

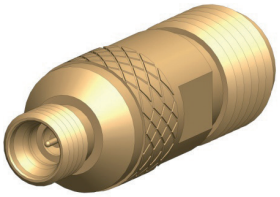

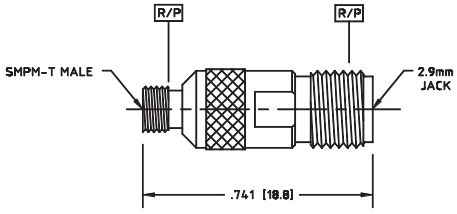

HUBER+SUHNER type	Item no.	Packaging	Detent
29429-4T2	80362561	single	full

Cable groups see page 32 | Assembly tools see page 531 | Mounting holes/PCB layouts see page 561

L'IMPULSION
Retrouvez nous sur
www.limpulsion.fr

Series MMCX – micro miniature connectors

Description

HUBER+SUHNER MMCX connectors are intended for use in applications where the smallest dimensions have to be achieved. These connectors can be used in applications from DC to 6 GHz.

The reliable "snap-on" coupling mechanism ensures that the electrical parameters are consistently reproduced. Due to its non-slotted outer contact, the MMCX series provides a low RF leakage.

In addition, HUBER+SUHNER SMT MMCX connectors fully meet today's SMT (Surface Mount Technology) requirements with superior design, material selection and packaging.
The HUBER+SUHNER SMT connectors are suitable to all reflow-soldered SMT-PCBs where impedance matching or screened signal transmission is necessary.

Content

Description	113
Interface dimensions in mm/inches	113
Technical data	114
Cable connectors	116
Receptacles with solder end	121
PCB connectors	122
Packaging for MMCX edge mount	124
Application notes for MMCX edge mount	124

Interface dimensions (mm/inches)

Plug (male)

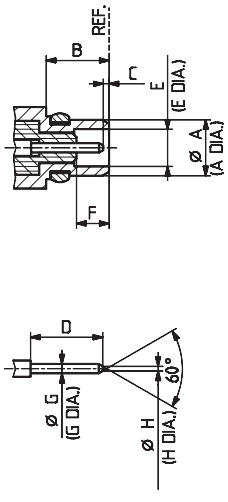

Jack (female)

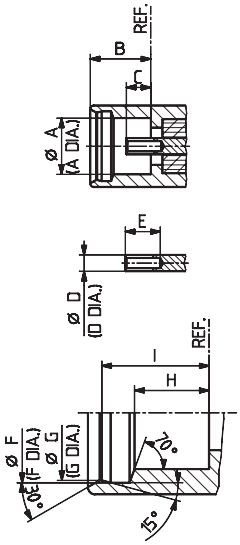

	Plug		Jack	
	min.	max.	min.	max.
A	-	2.40/0.094	2.41/0.095	-
B	2.70/0.106	-	-	2.65/0.104
C	0.00/0.000	0.25/0.010	0.90/0.035	1.20/0.047
D	1.23/0.048	-	0.70/0.028 nom.	
E	1.58/0.062	1.62/0.064	1.40/0.055	-
F	1.23/0.048	-	3.00/0.118	3.04/0.120
G*	0.38/0.015	0.42/0.017	2.88/0.113	2.92/0.115
H	-	0.20/0.008	1.57/0.062	1.63/0.064

	Jack		
G [1]	2.88/0.113	2.90/0.114	2.92/0.115
I	2.34/0.092	2.30/0.091	2.26/0.089

Interface dimensions conformable to the standards:

International: IEC 61169-52

[1] I is rated to G

L'IMPULSION
Retrouvez nous sur
www.limpulsion.fr

Series MMCX – technical data

Electrical data	CECC 22000	Requirements
Impedance		50 Ω
Frequency range		DC to 6 GHz
Dielectric withstanding voltage (at sea level)	4.4.5	500 V rms, 50 Hz
Working voltage (at sea level)		≥ 170 V rms, 50 Hz
Insulation resistance	4.4.4	≥10^3 MΩ/≥ 500 MΩ [1]
Contact resistance • Centre contact • Outer contact	 4.4.2 4.4.3	 ≤ 5.0 mΩ/≥ 10 MΩ [1] ≤ 2.5 mΩ/≥ 5 MΩ [1]
VSWR (mated pair) • Up to 4 GHz • 4 up to 6 GHz	4.4.1	(typical values) ≤ 1.15 ≤ 1.40 for cable connectors, see table below
RF leakage (measured at 1 GHz) • Connectors for flexible cables • Connectors for semi-rigid cables	4.4.8	 ≥ 60 dB ≥ 70 dB

[1] valid for MMCX "cube" connectors only

Typical VSWR	Frequency range			Cable group
Connector type	1 GHz	2.5 GHz	6 GHz	
Straight connectors	1.03	1.08	1.12	Y3, Y11
	1.04	1.08	1.12	U1
Right angle connectors	1.03	1.08	1.13	Y3, Y11
	1.07	1.12	1.25	U1

Mechanical data	CECC 22000	Requirements
Engagement force	4.5.4	≤ 15 N/3.4 lbs
Disengagement force	4.5.4	6 to 15 N/1.4 to 3.4 lbs
Contact captivation	4.5.2	≥ 10 N/2.3 lbs
Cable retention force [1]	4.5.5	see pages 32 – 41
Durability (matings)	4.7.1	≥ 500

[1] value considers maximum load of the cables without irreversible variations of specifications

Environmental data	CECC 22000 test conditions	Equivalent MIL test conditions
Temperature range		–55 to +155 °C/–67 to +311 °F
Climatic category	4.6.5 → 55/155/21	
Thermal shock	4.6.7 → IEC 68-2-14 Na	MIL-STD-202, method 107, condition F
Moisture resistance	4.6.6 → IEC 68-2-3 Ca	MIL-STD-202, method 106
Corrosion	4.6.10 → IEC 68-2-11 Ka	saltspray test acc. to MIL-STD-202, method 101, condition B
Vibration	4.6.3 → IEC 68-2-6 Fc	MIL-STD-202, method 204, condition C

Performance values are typical for the connector interface. Individual component or connector performance may vary depending on the connector design, attachment (e.g. cable, PCB) or application. For detailed specifications please refer to the specific data sheets on our website www.hubersuhner.com.

L'IMPULSION | Retrouvez nous sur www.limpulsion.fr

Series MMCX – technical data

Environmental data for "cube" connectors only	CECC 22000 test conditions	Equivalent MIL test conditions
Temperature range		−40 to +90 °C/−40 to +194 °F
Climatic category	4.6.5 → 40/90/21	
Thermal shock	4.6.7	MIL-STD-202, method 107, −40 °C/40 °F and +90 °C/+194 °F, 30 min. each
Moisture resistance	4.6.6	MIL-STD-202, method 103, condition B
Vibration	4.6.3	3 cycles in 3 opposite directions 10 to 150 Hz, 10 to 60 Hz: 0.75 mm/0.030 in., 60 to 150 Hz: 10 G
Mechanical shock	4.6.4	MIL-STD-202, method 213, condition B

Material data		
Connector parts	Material	Plating
Centre contact	copper-beryllium alloy, bronze	gold/SUCOPRO® gold plating
Body	brass	gold/SUCOPRO® gold plating
Crimp ferrules	brass	gold/SUCOPRO® gold plating
Insulators	PTFE or PFA	

Material data for "cube" connectors only		
Connector parts	Material	Plating
Leads Contact sockets	bronze	gold
Body	LCP (liquid drystal polymer), brass	gold
Outer contact	brass	gold
Insulators	LCP (liquid drystal polymer), PTFE or PFA	

Processing data		
for "cube" connectors only	Test standard	Requirement
Lead free reflow process	IPC/JEDECJ-STD-020C	recommended
Adherent to the print • Shearing • Pulling (vertical to PCB)		25 N/5.6 lbs 50 N/11.2 lbs

Performance values are typical for the connector interface. Individual component or connector performance may vary depending on the connector design, attachment (e.g. cable, PCB) or application. For detailed specifications please refer to the specific data sheets on our website www.hubersuhner.com.

L'IMPULSION Retrouvez nous sur www.limpulsion.fr

Series MMCX – cable connectors

Straight cable plugs (male)

For semi-rigid cables

- Cable entry soldered
- Centre contact crimped

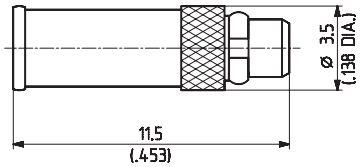



HUBER+SUHNER type	Item no.	Cable group (example)	Packaging	Assembly instruction	Crimp insert
11_MMCX-50-1-3/111_OE	22648893	Y2 (EZ_47)	single	9078	1
11_MMCX-50-2-1/111_OE 11_MMCX-50-2-1/111_OH	22645297 22649039	Y3, Y11, Y16 (EZ_86)	single bulk 100 pcs.	9170	

For flexible cables

- HUBER+SUHNER full crimp

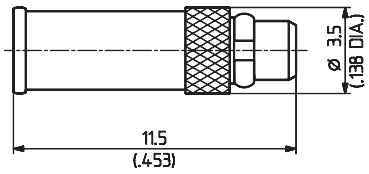



HUBER+SUHNER type	Item no.	Cable group (example)	Packaging	Assembly instruction	Crimp insert
11_MMCX-50-1-1/111_OE 11_MMCX-50-1-1/111_OH	22645298 22651666	U1 (ENVIROFLEX_178)	single bulk 100 pcs.	9169	1/2.67
11_MMCX-50-1-2/111_OE 11_MMCX-50-1-2/111_OH	22645296 84027753	U0 (K_01152-07)	single bulk 100 pcs.		

For flexible cables

- HUBER+SUHNER full crimp

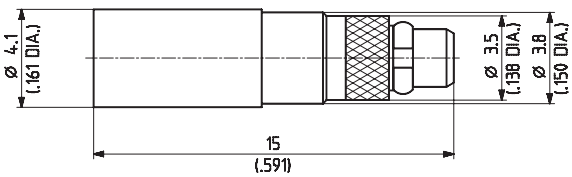



HUBER+SUHNER type	Item no.	Cable group (example)	Packaging	Assembly instruction	Crimp insert
11_MMCX-50-2-3/111_OE 11_MMCX-50-2-3/111_OH	22649899 23000258	U2 (ENVIROFLEX_316)	single bulk 100 pcs.	9110	1 A
11_MMCX-50-2-4/111_OE	22649901	U4 (ENVIROFLEX_316_D)	single		

Cable groups see page 32 | Assembly tools see page 531 | Mounting holes/PCB layouts see page 561

Series MMCX – cable connectors

Right angle cable plugs (male)

For semi-rigid cables

- Cable entry soldered
- Centre contact soldered



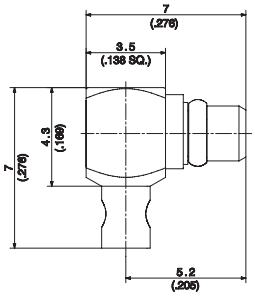

Fig. 1

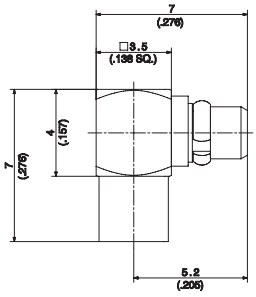

Fig. 2

HUBER+SUHNER type	Item no.	Cable group (example)	Packaging	Assembly instruction	Fig.
16_MMCX-50-1-12/111_OE 16_MMCX-50-1-12/111_OH	84030531 21000178	Y2, Y15 (EZ_47)	single bulk 100 pcs.	0000180777	1
16_MMCX-50-2-13/111_OE 16_MMCX-50-2-13/111_OH	84032569 84007944	Y3, Y11 (EZ_86)	single bulk 100 pcs.	0000214734	2

For flexible cables

- Cable entry crimp
- Centre contact soldered



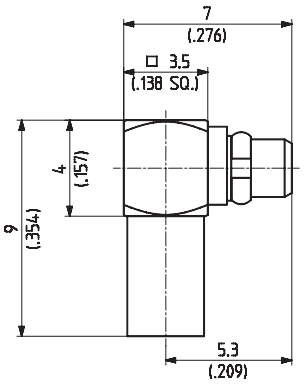

HUBER+SUHNER type	Item no.	Cable group (example)	Packaging	Assembly instruction	Crimp insert
16_MMCX-50-1-1/111_OE 16_MMCX-50-1-1/111_OH	22645955 22648762	U1 (ENVIROFLEX_178)	single bulk 100 pcs.	9175	2.67

Cable groups see page 32 | Assembly tools see page 531 | Mounting holes/PCB layouts see page 561

L'IMPULSION
Retrouvez nous sur
www.limpulsion.fr

Series MMCX – cable connectors

Right angle cable plugs (male)

For flexible cables
- Cable entry crimp
- Centre contact soldered

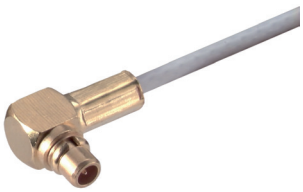

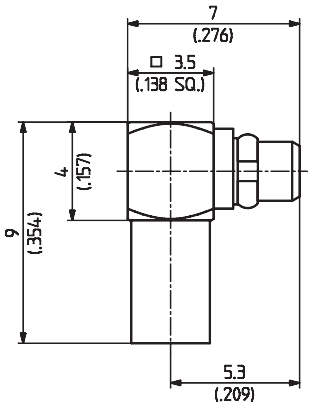

HUBER+SUHNER type	Item no.	Cable group (example)	Packaging	Assembly instruction	Crimp insert
16_MMCX-50-1-2/111_OE 16_MMCX-50-1-2/111_OH	22645956 22649009	U0 (K_01152-07)	single bulk 100 pcs.	9175	2.67

For flexible cables
- Cable entry crimp
- Centre contact soldered

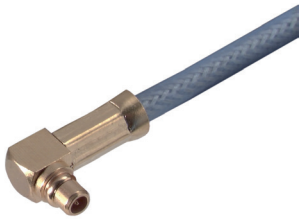

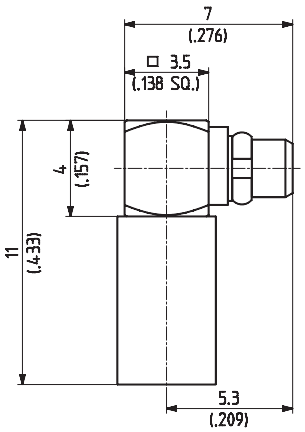

HUBER+SUHNER type	Item no.	Cable group (example)	Packaging	Assembly instruction	Crimp insert
16_MMCX-50-2-2/111_OE 16_MMCX-50-2-2/111_OH	22649374 22651401	U4 (ENVIROFLEX_316_D)	single bulk 100 pcs.	9128	A
16_MMCX-50-2-4/111_OE 16_MMCX-50-2-4/111_OH	22649433 22649635	U2 (ENVIROFLEX_316)	single bulk 100 pcs.		

Cable groups see page 32 | Assembly tools see page 531 | Mounting holes/PCB layouts see page 561

Series MMCX – cable connectors

Straight cable jacks (female)

For semi-rigid cables

- Cable entry soldered
- Centre contact crimped

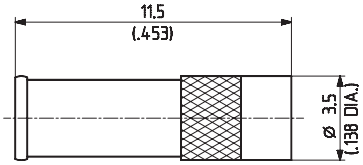



HUBER+SUHNER type	Item no.	Cable group (example)	Packaging	Assembly instruction	Crimp insert
21_MMCX-50-2-1/111_OE	22645290	Y3, Y11, Y16 (EZ_86)	single	9170	1

For flexible cables

- HUBER+SUHNER full crimp

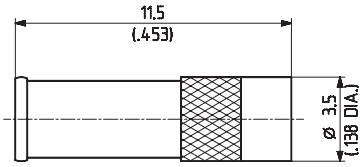



HUBER+SUHNER type	Item no.	Cable group (example)	Packaging	Assembly instruction	Crimp insert
21_MMCX-50-1-1/111_OE	22645288	U1 (ENVIROFLEX_178)	single	9169	1/2.67
21_MMCX-50-1-2/111_OE	22645289	U0 (K_01152-07)			

Straight bulkhead cable jacks (female)

For semi-rigid cables

- Cable entry soldered
- Centre contact crimped
- Front mounting

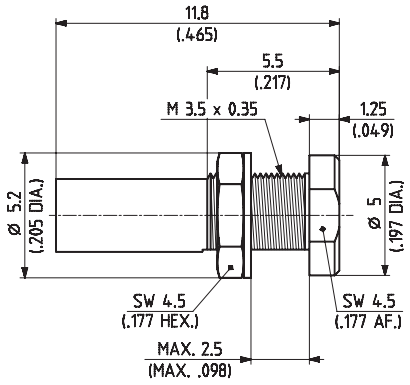

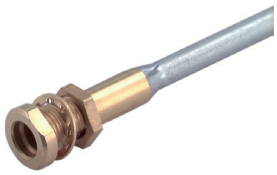

HUBER+SUHNER type	Item no.	Cable group (example)	Packaging	Assembly instruction	Mounting hole	Crimp insert
24_MMCX-50-2-1/111_OE	22645954	Y3, Y11, Y16 (EZ_86)	single	9170	ML 68	1

Cable groups see page 32 | Assembly tools see page 531 | Mounting holes/PCB layouts see page 561

L'IMPULSION Retrouvez nous sur www.limpulsion.fr

Series MMCX – cable connectors

Straight bulkhead cable jacks (female)

For flexible cables
- HUBER+SUHNER full crimp
- Front mounting

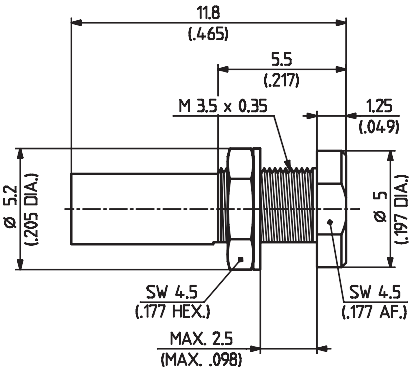



HUBER+SUHNER type	Item no.	Cable group (example)	Packaging	Assembly instruction	Mounting hole	Crimp insert
24_MMCX-50-1-1/111_OE 24_MMCX-50-1-1/111_OH	22645952 23000416	U1 (ENVIROFLEX_178)	single bulk 100 pcs.	9169	ML 68	1/2.67

Cable groups see page 32 | Assembly tools see page 531 | Mounting holes/PCB layouts see page 561

L'IMPULSION | Retrouvez nous sur www.limpulsion.fr

Series MMCX – receptacles with solder end

Receptacles, jacks (female)

- Bulkhead mounted



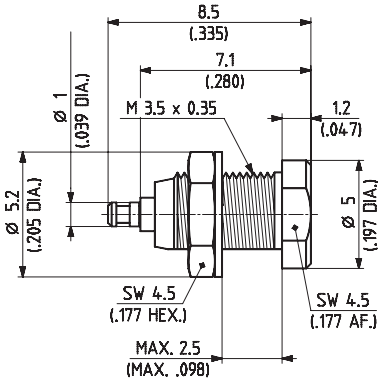

HUBER+SUHNER type	Item no.	Packaging	Mounting hole
22_MMCX-50-0-1/111_OE	22645951	single	ML 68
22_MMCX-50-0-1/111_OH	22660126	bulk 100 pcs.	

- Bulkhead mounted



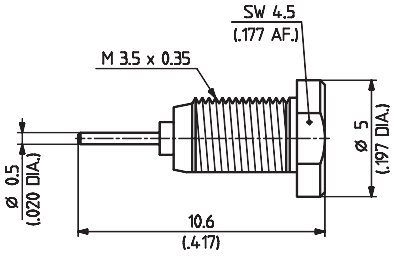

HUBER+SUHNER type	Item no.	Packaging	Mounting hole
22_MMCX-50-0-4/111_OH	22660282	bulk 100 pcs.	M 3.5 × 0.35

Cable groups see page 32 | Assembly tools see page 531 | Mounting holes/PCB layouts see page 561

L'IMPULSION
Retrouvez nous sur
www.limpulsion.fr

Series MMCX – PCB connectors

Straight PCB plugs (male)

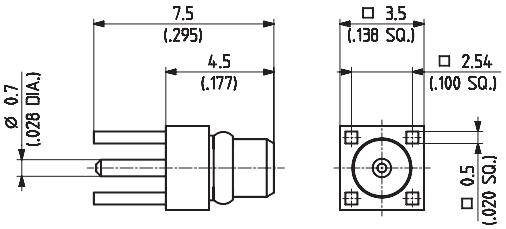

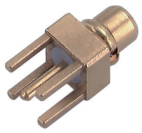

HUBER+SUHNER type	Item no.	Packaging	Mounting hole	Notes
81_MMCX-50-1-1/111_OE	22646298	single	ML 44	without stand-off

Straight PCB jacks (female)

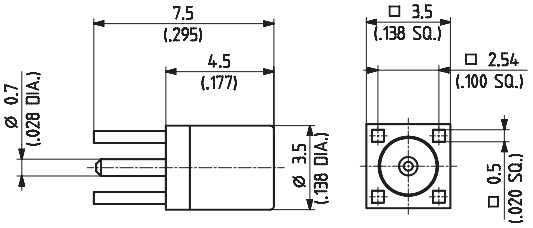



HUBER+SUHNER type	Item no.	Packaging	Mounting hole	Notes
82_MMCX-50-0-1/111_NE 82_MMCX-50-0-1/111_NH	22645958 22648469	single bulk 100 pcs.	ML 44	without stand-off

Jacks for horizontal applications

- Edge mount

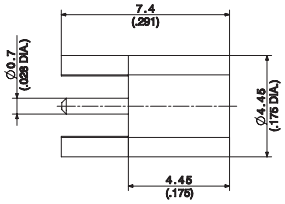



HUBER+SUHNER type	Item no.	Packaging	PCB layout	Notes
82_MMCX-S50-0-2/111_KE 82_MMCX-S50-0-2/111_KH	22648789 22649680	single bulk 100 pcs.	see application notes on page 125	
82_MMCX-S50-0-2/111_KG	22649679	tape and reel	see application notes on page 125	blister tape containing 750 pcs.

Cable groups see page 32 | Assembly tools see page 531 | Mounting holes/PCB layouts see page 561

Series MMCX – PCB connectors

Straight PCB jacks (female)



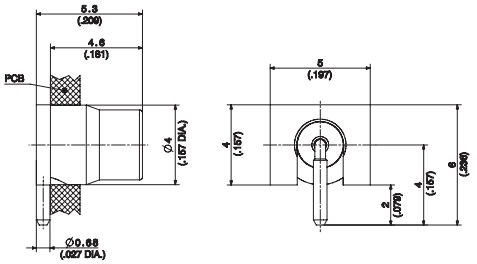

Fig. 1

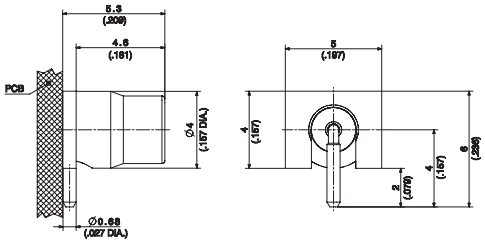

Fig. 2

HUBER+SUHNER type	Item no.	Packaging	Mounting hole	Notes	
82_MMCX-50-0-8/111_OE 82_MMCX-50-0-8/111_OM	22652153 22660270	single tape and reel	ML 167	through-hole mount	1
82_MMCX-50-0-18/111_OM	23023564	tape and reel	ML 130	surface mount technology	2

Right angle PCB plugs (male)



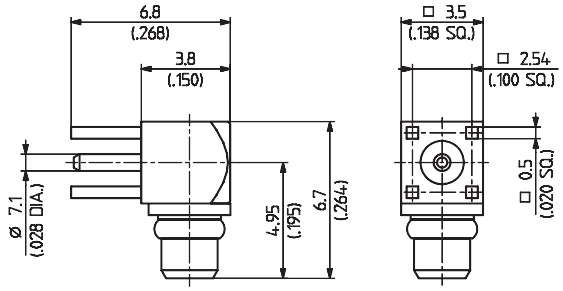

HUBER+SUHNER type	Item no.	Packaging	Mounting hole	Notes
84_MMCX-50-0-1/111_OH	22658819	bulk 100 pcs.	ML 44	without stand-off

Right angle PCB jacks (female)

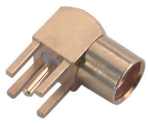

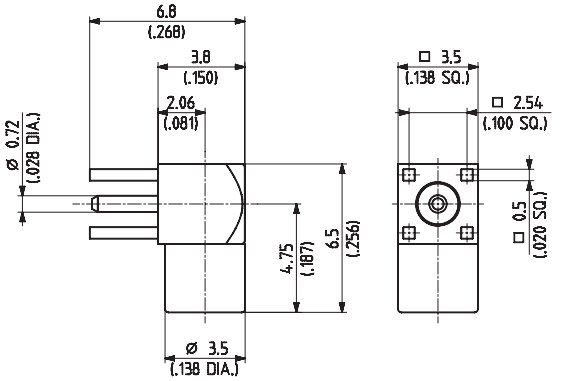

HUBER+SUHNER type	Item no.	Packaging	Mounting hole	Notes
85_MMCX-50-0-1/111_OE 85_MMCX-50-0-1/111_OH	22645968 22646636	single bulk 100 pcs.	ML 44	without stand-off

Cable groups see page 32 | Assembly tools see page 531 | Mounting holes/PCB layouts see page 561

L'IMPULSION
Retrouvez nous sur
www.limpulsion.fr

Series MMCX – edge mount connectors – packaging

Blister tape supply in accordance with IEC 286-3/EIA-481

For automated placement the connectors can be supplied on industry standard type-and-reel.

Bulk supply in bags of 100 pcs.

This delivery form is suitable for manual or automated tube fed pick-and-place assembly.

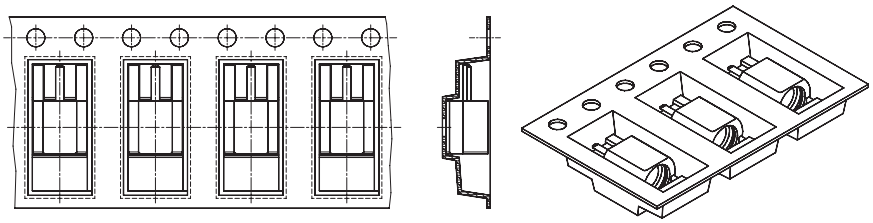

Straight (horizontal) application

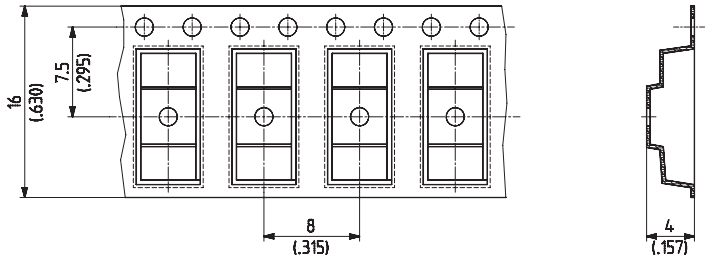

Dimensions of blister carrier tape

The 16 mm/0.630 in. blister tape is delivered on reels of 330 mm/13 in. diameter and in tough cardboard box.

Series MMCX edge mount connectors – application notes

Dimensions of mated pair and clearance for mating

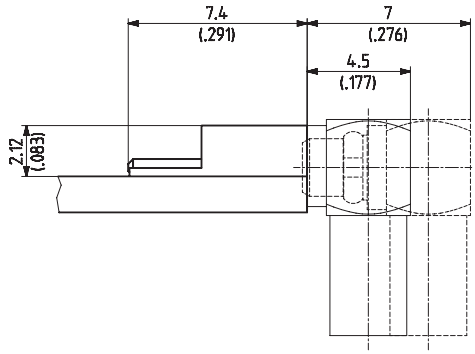

Horizontal mounting together with a right angle cable connector.

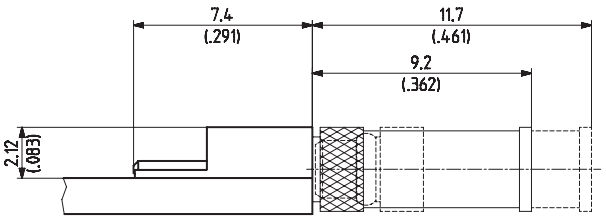

Horizontal mounting together with a straight cable connector.

Cable groups see page 32 | Assembly tools see page 531 | Mounting holes/PCB layouts see page 561

Series MMCX – edge mount connectors – application notes

Appropriate operation for MMCX edge mount

For appropriate operation the following has to be considered:
- Avoid forces from the cable of the mating connector to the surface mount connector.
  Fix the cable sufficiently and in several places.
- Apply only axial forces during the mating and demating of the connector parts.

Non-axial forces – such as improper pulling at the cable entry or the cable portion of a right angle mating connector – may cause excessive torque forces, which could result in damage to the solder joints.

Warning:
force must not be applied to this region.

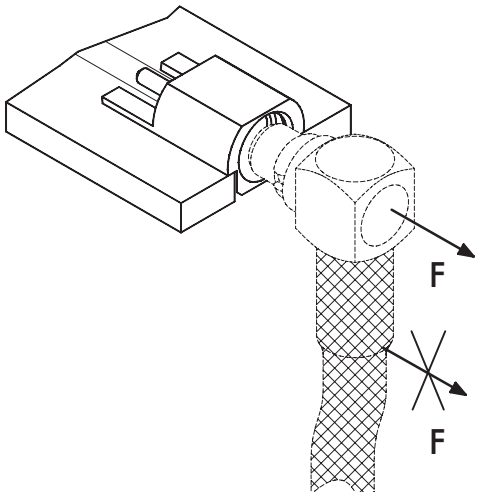

Recommended mounting pattern for MMCX edge mount

Material FR 4 (ε_r = 4.6)

Pattern
Land (free of solder mask)

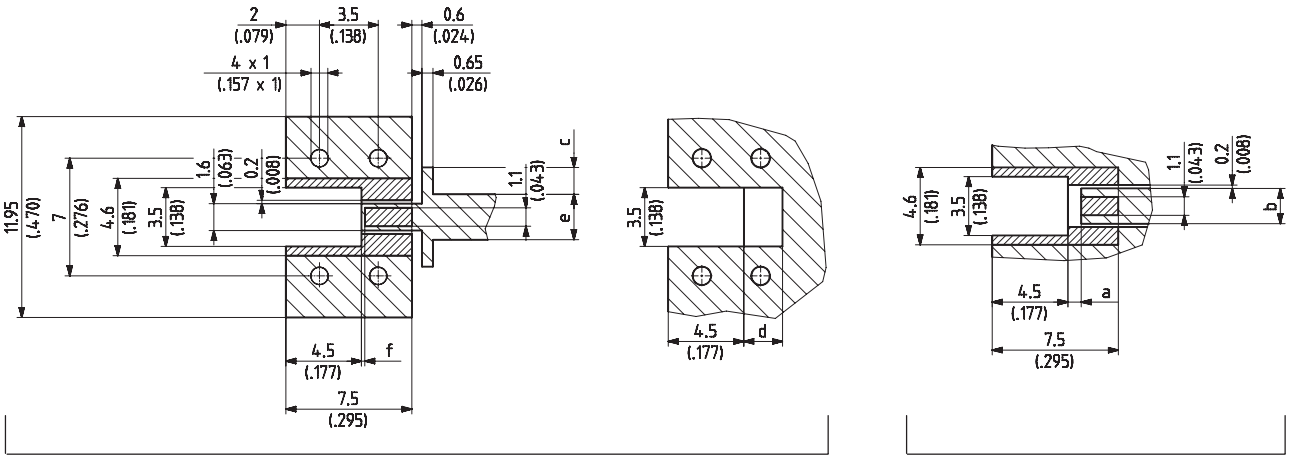

Microstrip line

Coplanar line

PCB thickness	a	b	c	d	e	f
0.8 mm/0.031 in.	1.6/0.063	1.90/0.075		1.1/0.043	1.4/0.055	1.0/0.039
1.0 mm/0.039 in.	1.4/0.055	1.75/0.069	0.3/0.012	1.2/0.047	1.8/0.071	0.9/0.035
1.6 mm/0.063 in.	0.8/0.031	1.55/0.061	1.6/0.063	2.3/0.091	2.8/0.110	0.4/0.016

Cable groups see page 32 | Assembly tools see page 531 | Mounting holes/PCB layouts see page 561

L'IMPULSION
Retrouvez nous sur
www.limpulsion.fr

L'IMPULSION
Retrouvez nous sur
www.limpulsion.fr

Series MCX 50 Ω – micro miniature connectors

Description

HUBER+SUHNER MCX micro miniature snap-on connectors offer you an excellent blend of size,weight, durability and performance for applications such as mobile and fixed telecommunications, in GPS applications and in test+measurement systems for testing instruments and apparatus. They are designed for frequencies up to 6 GHz and are tested according to the international standard CECC 22220. And they meet all the high requirements that micro coaxial connectors are expected to satisfy today.

Content

Description	127
Interface dimensions in mm/inches	127
Technical data	128
Cable connectors	130
Receptacles with solder end	134
PCB connectors	135

Interface dimensions (mm/inches)

Plug (male)

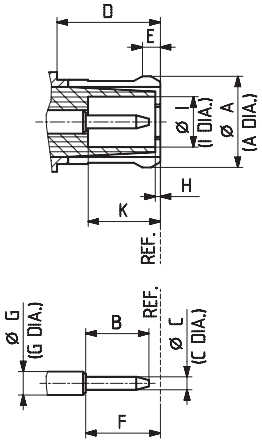

	Plug		Jack	
	min.	max.	min.	max.
A	3.72/0.146 [1]	3.80/0.150*	3.60/0.142	3.70/0.146
B	2.49/0.098	2.59/0.102	2.80/0.110	-
C	0.48/0.019	0.53/0.021	3.75/0.148	3.85/0.152
D	4.15/0.163	-	4.00/0.157	4.12/0.162
E	0.70/0.028	0.75/0.030	0.75/0.030	0.85/0.033
F	2.80/0.110	3.20/0.126	2.30/0.091	2.80/0.110
G	0.95/0.037 nom.		0.95/0.037 nom.	
H	-	0.30/0.012	3.42/0.135	3.48/0.137
I	2.00/0.079	2.07/0.081	1.80/0.071	1.98/0.078
K	2.80/0.110	3.20/0.126	2.60/0.102	2.80/0.110

Jack (female)

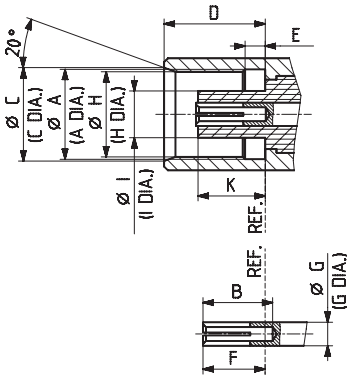

Interface dimensions conformable to the standards:

International	IEC 60169-36
Europe	CECC 22220

[1] prior to slotting

L'IMPULSION Retrouvez nous sur www.limpulsion.fr

Series MCX 50 Ω – technical data

Electrical data	CECC 22000	Requirements
Impedance		50 Ω
Frequency range		DC to 6 GHz
Dielectric withstanding voltage (at sea level)	4.4.5	≥ 750 V rms, 50 Hz (depending on cable)
Working voltage (at sea level) • Unmated		≥ 170 V rms, 50 Hz (depending on cable)
Working voltage (at 21 000 m/70 000 ft) • Unmated		≥ 42 V rms, 50 Hz (depending on cable)
Insulation resistance	4.4.4	$\geq 10^4$ MΩ
Contact resistance • Centre contact • Outer contact	 4.4.2 4.4.3	 ≤ 5.0 mΩ ≤ 1.0 mΩ
RF leakage (measured at 1 GHz) • Connectors for flexible cables • Connectors for semi-rigid cables	 4.4.8	 ≥ 60 dB ≥ 70 dB

Mechanical data	CECC 22000	Requirements
Engagement force	4.5.1	≤ 25 N/5.6 lbs
Disengagement force	4.5.1	8 to 20 N/1.8 to 4.5 lbs
Contact captivation	4.5.2	≥ 10 N/2.3 lbs
Cable retention force [1]	4.5.5	see pages 32 – 41
Durability (matings)	4.7.1	≥ 500

Environmental data	CECC 22000	Requirements
Temperature range		–55 to +155 °C/–67 to +311 °F
Climatic category		IEC → 55/155/21
Thermal shock	4.6.7	MIL-STD-202, method 107, condition F
High temperature endurance test	4.7.2	MIL-STD-202, method 108A, condition D
Moisture resistance	4.6.6	MIL-STD-202, method 106
Corrosion	4.6.10	saltspray test acc. to MIL-STD-202, method 101, condition B
Vibration	4.6.3	MIL-STD-202, method 204, condition D

Performance values are typical for the connector interface. Individual component or connector performance may vary depending on the connector design, attachment (e.g. cable, PCB) or application. For detailed specifications please refer to the specific data sheets on our website www.hubersuhner.com.

[1] Value considers maximum load of the cables without irreversible variations of specifications.

L'IMPULSION
Retrouvez nous sur
www.limpulsion.fr

Series MCX 50 Ω – technical data

Material data		
Connector parts	**Material**	**Plating**
Bodies	brass	gold/SUCOPLATE®/SUCOPRO® gold plating
Pin contacts	brass	gold/SUCOPRO® gold plating
Socket contacts	copper-beryllium alloy	gold/SUCOPRO® gold plating
Outer contacts • Plug • Jack	 copper-beryllium alloy brass	 gold/SUCOPRO® gold plating SUCOPLATE®
Crimp ferrules	copper/brass	gold/SUCOPLATE®/SUCOPRO® gold plating
Insulators	PTFE or PFA	

Performance values are typical for the connector interface. Individual component or connector performance may vary depending on the connector design, attachment (e.g. cable, PCB) or application. For detailed specifications please refer to the specific data sheets on our website www.hubersuhner.com.

L'IMPULSION Retrouvez nous sur www.limpulsion.fr

Series MCX 50 Ω – cable connectors

Straight cable plugs (male)

For semi-rigid cables, Sucoform and Multiflex cables
- Cable entry soldered
- Centre contact soldered



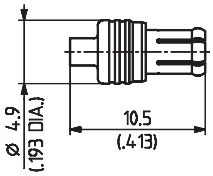

HUBER+SUHNER type	Item no.	Cable group (example)	Packaging	Assembly instruction
11_MCX-50-1-14/111_NE	23032081	Y2, Y15 (EZ_47)	single	27413
11_MCX-50-2-19/111_NE 11_MCX-50-2-19/111_NH	23024699 23032147	Y3, Y11, Y16 (EZ_86)	single bulk 100 pcs.	27496
11_MCX-50-3-1/111_NH	84006763	Y12, Y17 (SUCOFORM_141)	bulk 100 pcs.	0000200108

For flexible cables
- HUBER+SUHNER full crimp
- Taper sleeves see page 554



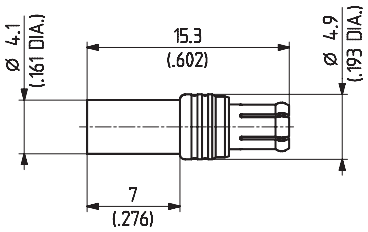

HUBER+SUHNER type	Item no.	Cable group (example)	Packaging	Assembly instruction	Crimp insert
11_MCX-50-1-13/133_NH	22658307	U1 (ENVIROFLEX_178)	bulk 100 pcs.	27316	1 A
11_MCX-50-1-13/111_NH	23002830	U1 (ENVIROFLEX_178)	bulk 100 pcs.	27316	
11_MCX-50-2-15/111_NE 11_MCX-50-2-15/111_NH	84018641 23000440	U4 (ENVIROFLEX_316_D)	single bulk 100 pcs.	27306	
11_MCX-50-2-15/133_NH	23000566	U4 (ENVIROFLEX_316_D)	bulk 100 pcs.	27306	
11_MCX-50-2-16/111_NE 11_MCX-50-2-16/111_NH	84022831 22658275	U2 (ENVIROFLEX_316)	single bulk 100 pcs.	27306	
11_MCX-50-2-16/133_NH	23000437	U2 (ENVIROFLEX_316)	bulk 100 pcs.	27306	

Cable groups see page 32 | Assembly tools see page 531 | Mounting holes/PCB layouts see page 561

L'IMPULSION | Retrouvez nous sur www.limpulsion.fr

Series MCX 50 Ω – cable connectors

Right angle cable plugs (male)

For semi-rigid cables, Sucoform and Multiflex cables
- Cable entry soldered
- Centre contact soldered



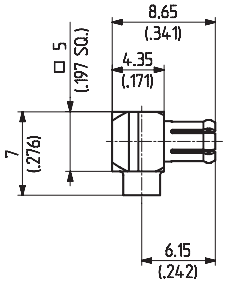

HUBER+SUHNER type	Item no.	Cable group (example)	Packaging	Assembly instruction
16_MCX-50-1-11/111_NE 16_MCX-50-1-11/111_NH	23024700 23032063	Y2, Y15 (EZ_47)	single bulk 100 pcs.	27495
16_MCX-50-2-104/111_NH	23032067	Y3, Y11, Y16 (EZ_86)	bulk 100 pcs.	27308
16_MCX-50-3-8/111_NH	23012471	Y5, Y17 (EZ_141)	bulk 100 pcs.	27401

For flexible cables
- Cable entry crimp
- Centre contact soldered
- Taper sleeves see page 554

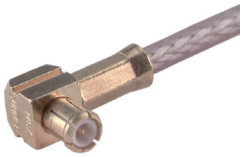

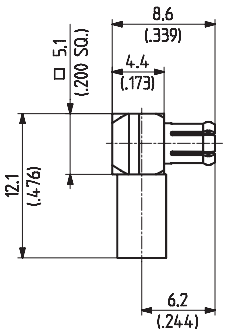

HUBER+SUHNER type	Item no.	Cable group (example)	Packaging	Assembly instruction	Crimp insert
16_MCX-50-1-7/111_NH	23000443	U1 (ENVIROFLEX_178)	bulk 100 pcs.	27319	A
16_MCX-50-1-7/133_NH	22658308	U1 (ENVIROFLEX_178)	bulk 100 pcs.	27319	
16_MCX-50-2-11/133_NE 16_MCX-50-2-11/133_NH	22660003 22650803	U4 (ENVIROFLEX_316_D)	single bulk 100 pcs.	27102	
16_MCX-50-2-11/111_NH-1	23015358	U4 (ENVIROFLEX_316_D)	bulk 100 pcs.	27102	
16_MCX-50-2-14/133_NE 16_MCX-50-2-14/133_NH	22660002 22660001	U2 (ENVIROFLEX_316)	single bulk 100 pcs.	27102	
16_MCX-50-2-14/111_NH	23000445	U2 (ENVIROFLEX_316)	bulk 100 pcs.	27102	

Cable groups see page 32 | Assembly tools see page 531 | Mounting holes/PCB layouts see page 561

L'IMPULSION
Retrouvez nous sur
www.limpulsion.fr

Series MCX 50 Ω – cable connectors

Right angle cable plugs (male)

For flexible cables
- Low profile
- Cable entry soldered
- Centre contact soldered



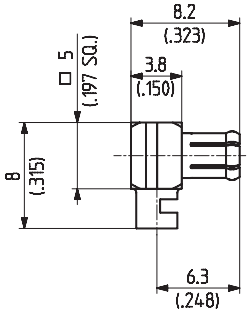

HUBER+SUHNER type	Item no.	Cable group (example)	Packaging	Assembly instruction
16_MCX-50-2-102/111_NH-1	23000454	U2 (ENVIROFLEX_316)	bulk 100 pcs.	27307

Straight cable jacks (female)

For flexible cables
- HUBER+SUHNER full crimp
- Taper sleeves see page 554



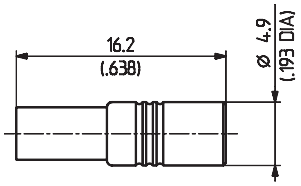

HUBER+SUHNER type	Item no.	Cable group (example)	Packaging	Assembly instruction	Crimp insert
21_MCX-50-1-11/111_NE 21_MCX-50-1-11/111_NH	84023972 23005297	U1 (ENVIROFLEX_178)	single bulk 100 pcs.	27317	1 A
21_MCX-50-2-12/111_NE	23032052	U4 (ENVIROFLEX_316_D)	single	27309	
21_MCX-50-2-12/133_NH	22658278	U4 (ENVIROFLEX_316_D)	bulk 100 pcs.	27309	
21_MCX-50-2-13/111_NH	23005298	U2 (ENVIROFLEX_316)	bulk 100 pcs.	27309	
21_MCX-50-2-13/133_NH	22658279	U2 (ENVIROFLEX_316)	bulk 100 pcs.	27309	

Cable groups see page 32 | Assembly tools see page 531 | Mounting holes/PCB layouts see page 561

L'IMPULSION | Retrouvez nous sur www.limpulsion.fr

Series MCX 50 Ω – cable connectors

Straight bulkhead cable jacks (female)

For semi-rigid, Sucoform and Multiflex cables

- Cable entry soldered
- Centre contact soldered



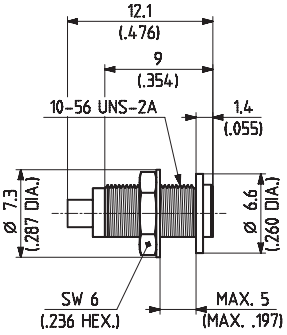

Fig. 1

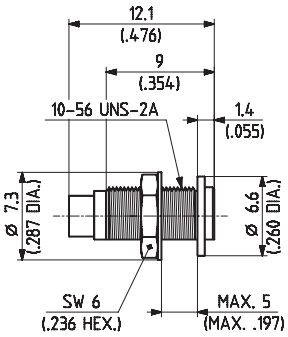

Fig. 2

HUBER+SUHNER type	Item no.	Cable group (example)	Packaging	Assembly instruction	Mounting hole	Fig.
24_MCX-50-1-3/111_NE	22641648	Y2, Y15 (EZ_47)	single	3100	ML 11	1
24_MCX-50-2-3/111_NE	22543580	Y3, Y11 (EZ_86)				2

For flexible cables

- HUBER+SUHNER full crimp
- Taper sleeves see page 554



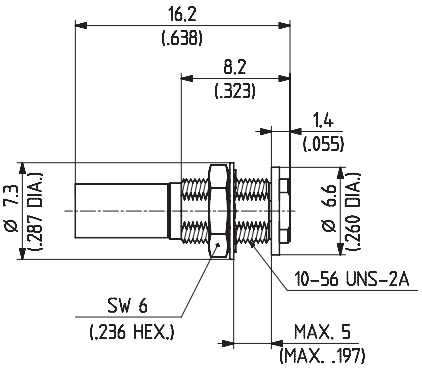

HUBER+SUHNER type	Item no.	Cable group (example)	Packaging	Assembly instruction	Mounting hole	Crimp insert
24_MCX-50-1-13/111_NH	23005299	U1 (ENVIROFLEX_178)	bulk 100 pcs.	27317	ML 11	1 A
24_MCX-50-1-13/133_NH	22658310	U1 (ENVIROFLEX_178)		27317		
24_MCX-50-2-6/111_NH	23005300	U4 (ENVIROFLEX_316_D)		27309		
24_MCX-50-2-7/111_NH	23000468	U2 (ENVIROFLEX_316)		27309		

Cable groups see page 32 | Assembly tools see page 531 | Mounting holes/PCB layouts see page 561

Series MCX 50 Ω – receptacles with solder end

Receptacles, jacks (female)

- Bulkhead mounted
- Front mounting



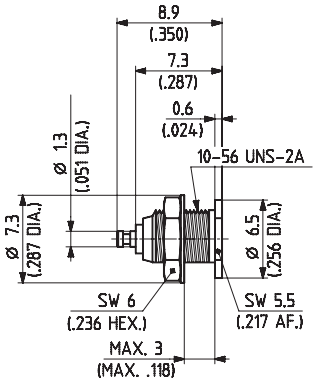

Fig. 1

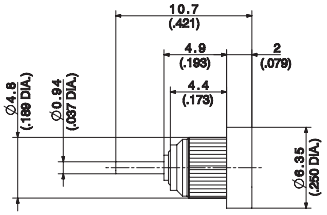

Fig. 2 (press-in)

HUBER+SUHNER type	Item no.	Packaging	Mounting hole	Fig.
22_MCX-50-0-2/111_NE 22_MCX-50-0-2/111_NH	22640171 22646960	single bulk 100 pcs.	ML 11	1
22_MCX-50-0-2/133_NH	22644433	bulk 100 pcs.	ML 11	
22_MCX-50-0-19/111_NH	22652984	bulk 100 pcs.	ML 103	2

Cable groups see page 32 Assembly tools see page 531 Mounting holes/PCB layouts see page 561

L'IMPULSION | Retrouvez nous sur www.limpulsion.fr

Series MCX 50 Ω – PCB connectors

Straight PCB plugs (male)

- With stand-off
- 2.54 mm/0.100 in. grid



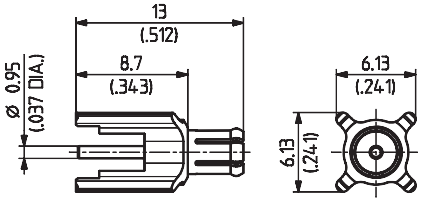

Fig. 1

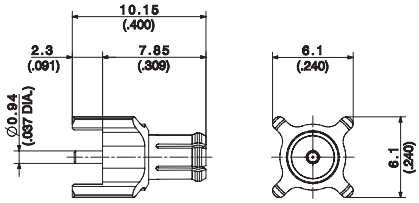

Fig. 2

HUBER+SUHNER type	Item no.	Packaging	Mounting hole	Fig.
81_MCX-50-0-6/111_NE 81_MCX-50-0-6/111_NH	84023713 23005296	single bulk 100 pcs.	ML 15	1
81_MCX-50-0-9/111_NH	23026871	bulk 100 pcs.		2

Straight PCB jacks (female)

- 2.54 mm/0.100 in. grid



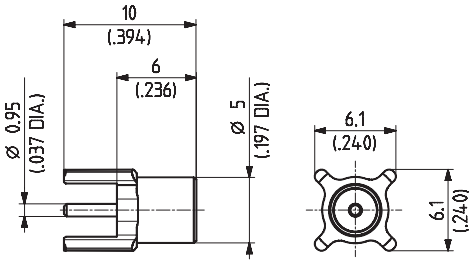

Fig. 1

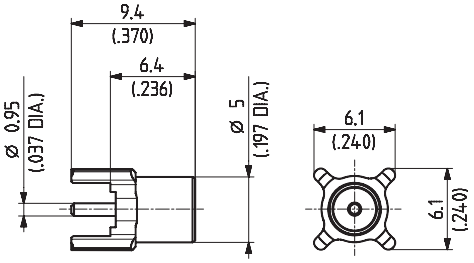

Fig. 2

HUBER+SUHNER type	Item no.	Packaging	Mounting hole	Notes	Fig.
82_MCX-50-0-17/111_NH-1	23006209	bulk 100 pcs.	ML 15	without stand-off	1
82_MCX-50-0-19/111_NE 82_MCX-50-0-19/111_NH-1 82_MCX-50-0-19/111_NM	84018352 22658305 23000573	single bulk 100 pcs. tape and reel		with stand-off	2

Cable groups see page 32 | Assembly tools see page 531 | Mounting holes/PCB layouts see page 561

L'IMPULSION
Retrouvez nous sur
www.limpulsion.fr

Series MCX 50 Ω – PCB connectors

Straight PCB jacks (female)

- 1.27 mm/0.050 in. grid
- Space saving version



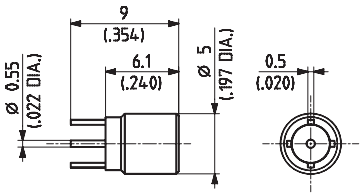

HUBER+SUHNER type	Item no.	Packaging	Mounting hole	Notes
82_MCX-50-0-10/111_NE	22641649	single	ML 44	without stand-off
82_MCX-50-0-10/111_NH	22651980	bulk 100 pcs.		

- Surface mount type SMT



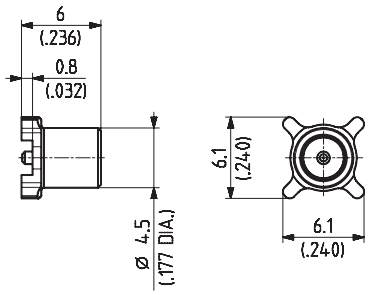

HUBER+SUHNER type	Item no.	Packaging	Mounting hole
82_MCX-S50-0-29/111_NE	84018482	single	ML 120
82_MCX-S50-0-29/111_NH	23001527	bulk 100 pcs.	
82_MCX-S50-0-29/111_NM	22658306	tape and reel	

- Surface mount type SMT
- Edge mount

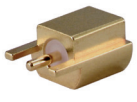

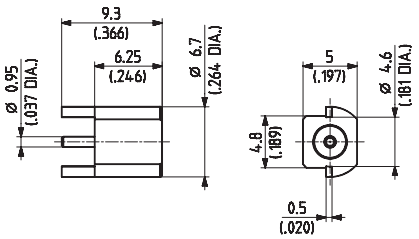

HUBER+SUHNER type	Item no.	Packaging	Mounting hole
82_MCX-S50-0-22/111_NE	22651467	single	ML 121
82_MCX-S50-0-22/111_NM	84011207	tape and reel	

Cable groups see page 32 | Assembly tools see page 531 | Mounting holes/PCB layouts see page 561

L'IMPULSION | Retrouvez nous sur www.limpulsion.fr

Series MCX 50 Ω – PCB connectors

Right angle PCB jacks (female)

- 2.54 mm/0.100 in. grid

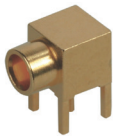

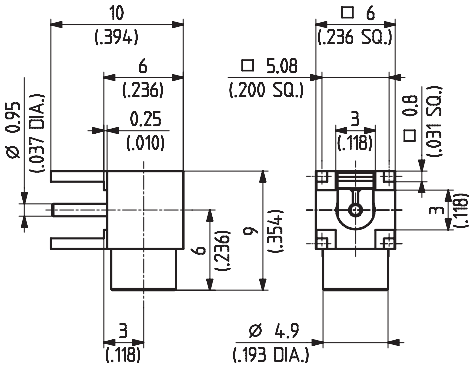

HUBER+SUHNER type	Item no.	Packaging	Mounting hole
85_MCX-50-0-16/111_NE	84018523	single	ML 15
85_MCX-50-0-16/111_NH	23001545	bulk 100 pcs.	
85_MCX-50-0-16/111_NM	84030779	tape and reel	

- Surface mount type SMT



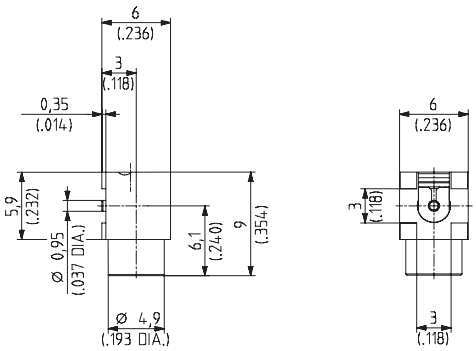

HUBER+SUHNER type	Item no.	Packaging	Mounting hole
85_MCX-S50-0-25/111_NH	23005091	bulk 100 pcs.	ML 123
85_MCX-S50-0-25/111_NM	84036471	tape and reel	

Cable groups see page 32 | Assembly tools see page 531 | Mounting holes/PCB layouts see page 561

L'IMPULSION
Retrouvez nous sur
www.limpulsion.fr

L'IMPULSION | Retrouvez nous sur www.limpulsion.fr

Series MCX 75 Ω – micro miniature connectors

Description

HUBER+SUHNER MCX 75 Ω connectors are derived from the MCX 50 Ω series but have a characteristic impedance of 75 Ω. They offer outstanding electrical properties up to 6 GHz and allow the transmission of digital signals with high bit rates.

Content

Description	139
Interface dimensions in mm/inches	139
Technical data	140
Cable connectors	141
PCB connectors	142

Interface dimensions (mm/inches)

Plug (male)

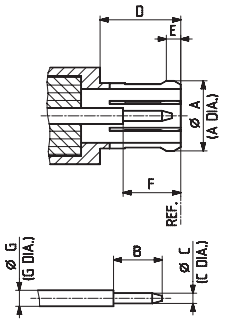

	Plug		Jack	
	min.	max.	min.	max.
A	3.72/0.146 [1]	3.80/0.150*	3.60/0.142	3.70/0.146
B	2.49/0.098	2.59/0.102	2.80/0.110	-
C	0.48/0.019	0.53/0.021	3.75/0.148	3.85/0.152
D	4.15/0.163	-	4.00/0.157	4.12/0.162
E	0.70/0.028	0.75/0.030	0.75/0.030	0.85/0.033
F	2.80/0.110	3.20/0.126	2.30/0.091	2.80/0.110
G	0.83/0.033 nom.		0.83/0.033 nom.	
H	3.42/0.135	3.48/0.137	-	-

Jack (female)

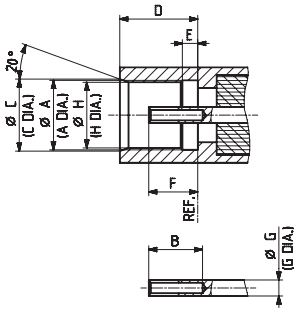

Interface dimensions conformable to the standards:

Intermateable with MCX 50 Ω connectors acc. to CECC 22220.

[1] prior to slotting

L'IMPULSION
Retrouvez nous sur
www.limpulsion.fr

Series MCX 75 Ω – technical data

Electrical data	Requirements
Impedance	75 Ω
Frequency range	DC to 6 GHz
Dielectric withstanding voltage (at sea level)	≥ 500 V rms, 50 Hz (depending on cable)
Working voltage (at sea level) • Unmated	≥ 170 V rms, 50 Hz (depending on cable)
Working voltage (at 21 000 m/70 000 ft.) • Unmated	≥ 45 V rms, 50 Hz (depending on cable)
Insulation resistance	≥10^3 MΩ
Contact resistance • Centre contact • Outer contact	 ≤ 5.0 mΩ ≤ 2.5 mΩ

Mechanical data	Requirements
Engagement force	≥ 25 N/5.6 lbs
Disengagement force	8 to 20 N/1.8 to 4.5 lbs
Contact captivation	≥ 10 N/2.3 lbs
Cable retention force [1]	see pages 32 – 41
Durability (matings)	≥ 500

Environmental data	Requirements
Temperature range	–65 to +165 °C/–85 to +329 °F
Climatic category	IEC → 55/155/21
Thermal shock	MIL-STD-202, method 107, condition F
Moisture resistance	MIL-STD-202, method 106
Corrosion	saltspray test acc. to MIL-STD-202, method 101, condition B
Vibration	MIL-STD-202, method 204, condition D

Material data		
Connector parts	Material	Plating
Bodies	brass	gold/SUCOPLATE®/SUCOPRO® gold plating
Pin contacts	brass	gold/SUCOPRO® gold plating
Socket contacts	copper-beryllium alloy	gold/SUCOPRO® gold plating
Outer contacts (resilient)	copper-beryllium alloy	gold/SUCOPLATE®/SUCOPRO® gold plating
Crimp ferrules	copper	SUCOPLATE®/SUCOPRO® gold plating
Insulators	PTFE or PFA	

Performance values are typical for the connector interface. Individual component or connector performance may vary depending on the connector design, attachment (e.g. cable, PCB) or application. For detailed specifications please refer to the specific data sheets on our website www.hubersuhner.com.

[1] Value considers maximum load of the cables without irreversible variations of specifications.

L'IMPULSION | Retrouvez nous sur www.limpulsion.fr

Series MCX 75 Ω – cable connectors

Straight cable plugs (male)

- HUBER+SUHNER full crimp
- Taper sleeves see page 554

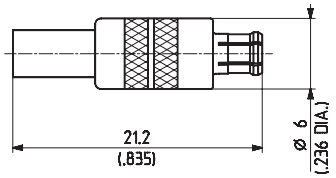



HUBER+SUHNER type	Item no.	Cable group (example)	Packaging	Assembly instruction	Crimp insert
11_MCX-75-2-1/113_NE	22646946	U5 (RG_179_B/U, ENVIROFLEX_179)	single	9196	1 A

Right angle cable plugs (male)

- Cable entry crimp
- Centre contact soldered
- Taper sleeves see page 554

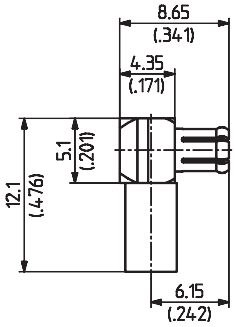



HUBER+SUHNER type	Item no.	Cable group (example)	Packaging	Assembly instruction	Crimp insert
16_MCX-75-2-5/133_NH	23008072	U5 (RG_179_B/U ENVIROFLEX_179)	bulk 100 pcs.	27383	A

Straight bulkhead cable jacks (female)

- HUBER+SUHNER full crimp
- "Snap-on" panel mounting
- Taper sleeves see page 554

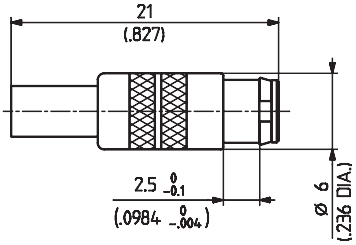



HUBER+SUHNER type	Item no.	Cable group (example)	Packaging	Assembly instruction	Mounting hole	Crimp insert
24_MCX-75-2-1/113_NE	22646948	U5 (RG_179_B/U, ENVIROFLEX_179)	single	9196	ML 82	1 A

Cable groups see page 32 | Assembly tools see page 531 | Mounting holes/PCB layouts see page 561

L'IMPULSION
Retrouvez nous sur
www.limpulsion.fr

Series MCX 75 Ω – PCB connectors

Straight PCB jacks (female)

- 2.54 mm/0.100 in.



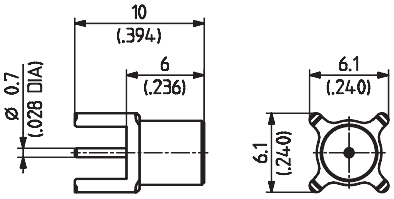

Fig. 1

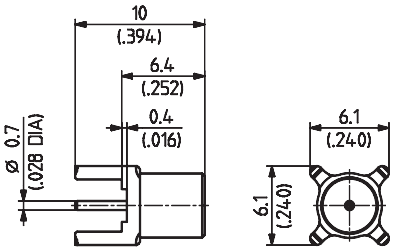

Fig. 2

HUBER+SUHNER type	Item no.	Packaging	Mounting hole	Notes	Fig.
82_MCX-75-0-4/111_NE 82_MCX-75-0-4/111_NH	84023729 23004043	single bulk 100 pcs.	ML 15	without stand-off	1
82_MCX-75-0-5/111_NH	23004046	bulk 100 pcs.		with stand-off	2

- Surface mount type SMT
- Edge mount



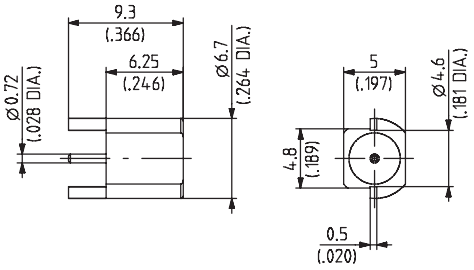

HUBER+SUHNER type	Item no.	Packaging
82_MCX-S75-0-2/111_NE 82_MCX-S75-0-2/111_NH	22651011 84020046	single bulk 100 pcs.

Right angle PCB jacks (female)

- 2.54 mm/0.100 in.



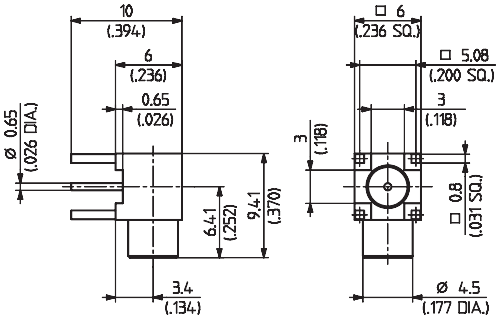

HUBER+SUHNER type	Item no.	Packaging
85_MCX-75-0-1/111_NE 85_MCX-75-0-1/111_NH	22649202 22650766	single bulk 100 pcs.

Cable groups see page 32 | Assembly tools see page 531 | Mounting holes/PCB layouts see page 561

L'IMPULSION
Retrouvez nous sur
www.limpulsion.fr

Series MMPX – 67 GHz snap-on connectors

Description

The snap-on connector family MMPX is the most ideal coaxial-to-PCB system solution for operating frequencies up to 67 GHz. The comprehensive product range consits of cable connectors and assemblies, PCB connectors and adaptors to open standards. MMPX connectors feature excellent electrical performance at smallest mechanical dimensions. The broad-band characteristics, the small size and the outstanding performance permit new solutions for applications in numerous markets such as high speed digital testing and radio frequency testing (60 GHz WPAN), industrial, mobile communication, space and defence.

Content

Description	143
67 Gbps snap-on solution	144
Technical data	145
Cable connectors	146
PCB connectors	148
Decoupling tools	151

Interface dimensions conformable to the standards:

HUBER+SUHNER proprietary interface standard

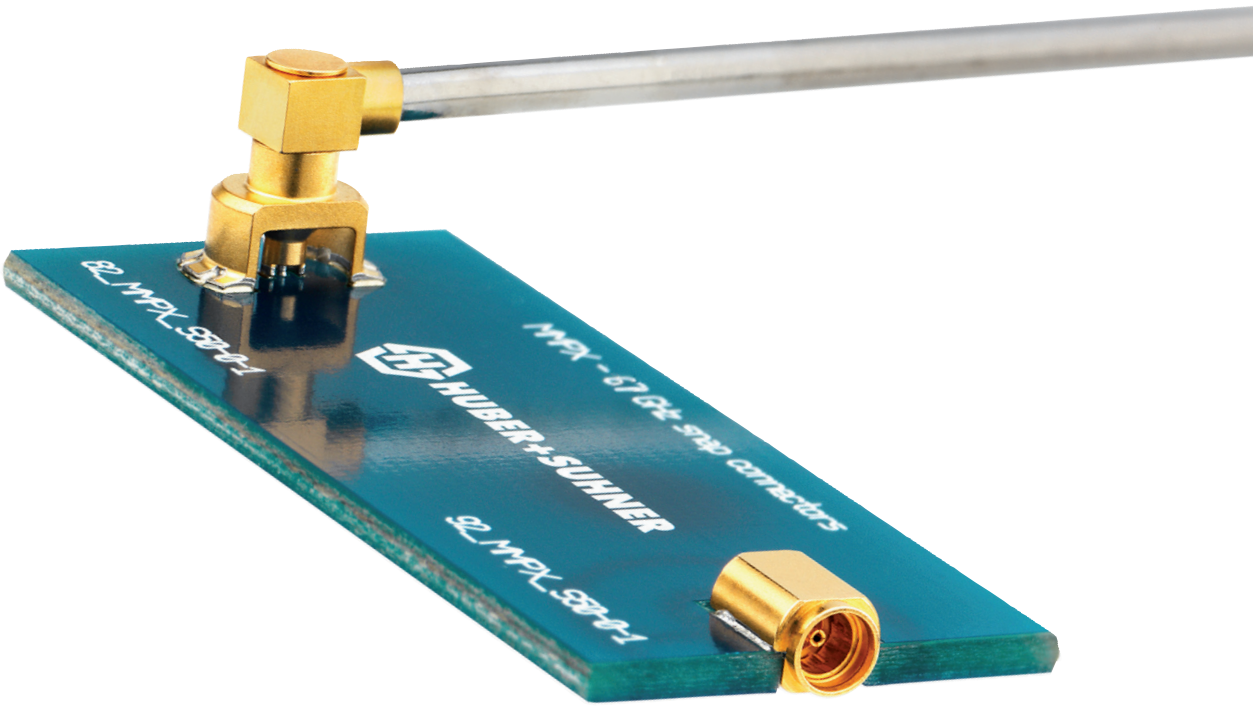

L'IMPULSION
Retrouvez nous sur
www.limpulsion.fr

Series MMPX – smallest dimensions and highest performance

Key features

- True 67 GHz coaxial-to-PCB transition
- Broadband characteristics from DC to 67 GHz
- Excellent return loss
- Excellent shielding, low cross-talk
- Via-in-pad capable
- 5.08 mm pitch (0.2 inch)
- Mechanically robust design
- Extensive technical support

Benefits

- **Future proof design**
  Thanks to the broadband characteristics, the excellent return loss and the true 67 GHz coaxial-to-PCB transition, MMPX helps in developing future proof RF systems.
- **Quick and reliable mating**
  The MMPX snap-on mechanism is completely decoupled from the electrical path and therefore specifically optimised for quick and reliable mating.
- **Space saving**
  The minimal pitch on boards of 5.08 mm (0.2 inch) saves expensive board material.
- **One connector for several applications**
  The unique electrical and mechanical performance as well as the compact form makes MMPX ideal for a variety of applications.
- **Overall cost saving**
  The attractive pricing, the extensive technical support including footprint service and the HUBER+SUHNER one-stop shop approach minimises the overall costs for design-ins and trade procedures.

Comprehensive product range of standard products

- Various PCB connector and cable connector types
- Broad range of standard Multiflex 86 HE cable assemblies (MMPX to SMA, PC 3.5, SK (2.92 mm standard) and PC 1.85/phase match: ± 1 ps absolute)
- Customised assemblies with semi-rigid, Sucoform, Multiflex and Minibend L cables
- Adaptors to SK (2.92 mm standard) and to PC 1.85
- Decoupling tools for easy and safe connector decoupling

L'IMPULSION | Retrouvez nous sur www.limpulsion.fr

Series MMPX – technical data

Electrical data				
Impedance	50 Ω			
Frequency range	DC to 67 GHz			
Return loss	typical values for coaxial-to-PCB transition (measured) [1]			
	configuration	DC to 26.5 GHz	26.5 to 50 GHz	50 to 67 GHz
	straight PCB jack mated with a straight cable plug	25 dB	20 dB	10 dB
	straight PCB jack mated with a right angle cable plug	25 dB	20 dB	10 dB
	edge mount PCB jack mated with a straight cable plug	25 dB	20 dB	16 dB
RF leakage (interface only)	–40 dB (DC to 67 GHz)			
Dielectric withstanding voltage (at sea level)	500 V rms, 50 Hz			
Working voltage (at sea level)	≤ 170 V rms, 50 Hz			
Insulation resistance	≥ 1 GΩ			
Contact resistance • Centre contact • Outer contact	 ≤ 5 mΩ ≤ 2 mΩ			

Mechanical data	
Engagement force	max. 30 N/6.7 lb_f (typical 20 N/4.4 lb_f)
Disengagement force	max. 30 N/6.7 lb_f (typical 15 N/3.3 lb_f)
Durability (matings)	100 (adaptors: 500)

Environmental data	Testing conditions
Temperature range	–65 to +155 °C/–85 to +31 °F
Thermal shock	MIL-STD-202, method 107 G, condition A/F
High temperature endurance	IEC-61-169-1
Corrosion	MIL-STD-202, method 101, condition B
Vibration	MIL-STD-202, method 204 D, condition D
Mechanical shock	MIL-STD-202, method 213 B, condition I
Solderability	MIL-STD-883

Processing data		
Typical values adherent to the PCB • Shearing • Pulling (vertical to the PCB)	straight PCB jack full SMT 90 N/20.2 lb_f 50 N/11.2 lb_f	edge mount PCB full SMT 70 N/15.7 lb_f no standard value available

Material data		
Male connector parts	**Material**	**Plating**
Centre contact	CuBe/brass	SUCOPRO® gold plating
Outer contact	brass	SUCOPRO® gold plating
Body	brass	SUCOPRO® gold plating
Insulators	PTFE	
Female connector parts		
Centre contact	CuBe	SUCOPRO® gold plating
Outer contact	CuBe	SUCOPRO® gold plating
Body	brass	SUCOPRO® gold plating
Insulators	PTFE	

Performance values are typical for the connector interface. Individual component or connector performance may vary depending on the connector design, attachment (e.g. cable, PCB) or application. For detailed specifications please refer to the specific data sheets on our website www.hubersuhner.com.

[1] Valid for recommended PCB material/stacking only!

L'IMPULSION
Retrouvez nous sur
www.limpulsion.fr

Series MMPX – cable connectors

Straight cable plugs (male)

For semi-rigid cables

- Outer contact soldered
- Center contact soldered

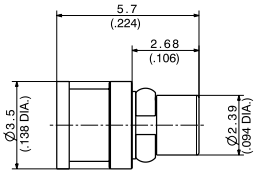



HUBER+SUHNER type	Item no.	Cable	Packaging	Notes
11_MMPX-50-2-1/111_NE	84022225	EZ_86, SR_86	single	precision interface, air dielectric

For semi-rigid, semi-flexible and flexible cables

- Outer contact soldered
- Center contact plugged

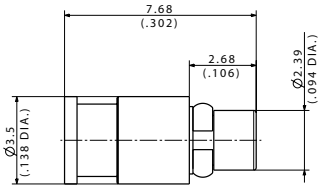



HUBER+SUHNER type	Item no.	Cable	Packaging	Notes
11_MMPX-50-1-4/111_NE	84122130	MULTIFLEX_53-02	single	for HUBER+SUHNER Multiflex 53-02 cable
11_MMPX-50-2-2/111_NE	84022228	EZ_86, SUCOFORM_86, SR_86		for semi-rigid and HUBER+SUHNER Sucoform cables
11_MMPX-50-2-3/111_NE	84089228	MULTIFLEX_86_HE		for HUBER+SUHNER Multiflex 86 HE cables

For minibend L assemblies

- Bend to the end cable entry
- Available as assembly only

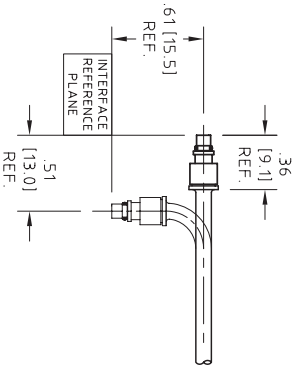



HUBER+SUHNER type	Item no.	Cable	Packaging
11_MMPX-50-0-1/19-_NE	---	Minibend L	single

Cable groups see page 32 | Assembly tools see page 531 | Mounting holes/PCB layouts see page 561

L'IMPULSION
Retrouvez nous sur
www.limpulsion.fr

Series MMPX – cable connectors

Right angle cable plugs (male)

For semi-rigid, semi-flexible and flexible cables
- Outer contact soldered
- Center contact plugged



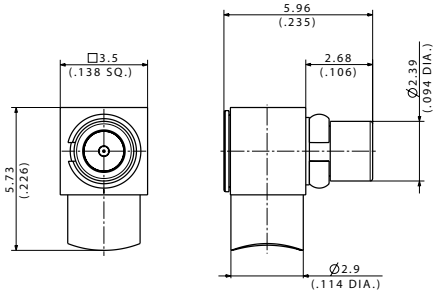

HUBER+SUHNER type	Item no.	Cable	Packaging	Notes
16_MMPX-50-2-1/111_NE	84022227	EZ_86, SUCOFORM_86, SR_86	single	for semi-rigid and HUBER+SUHNER Sucoform cables
16_MMPX-50-2-2/111_NE	84067778	MULTIFLEX_86_HE		for HUBER+SUHNER Multiflex 86 HE cable

Straight cable jack (female)

For semi-rigid and semi-flexible cables
- Outer contact soldered
- Center contact soldered



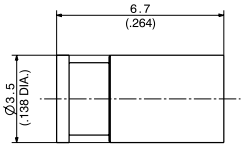

HUBER+SUHNER type	Item no.	Cable size	Packaging
21_MMPX-50-2-1/111_NE	84022226	EZ_86, SUCOFORM_86, SR_86	single

Cable groups see page 32 | Assembly tools see page 531 | Mounting holes/PCB layouts see page 561

L'IMPULSION
Retrouvez nous sur
www.limpulsion.fr

Series MMPX – PCB connectors

Straight PCB jacks (female)

- Full surface mount (SMD)
- Decoupling tool 74_Z-0-0-491 or 74_Z-0-0-555 recommended



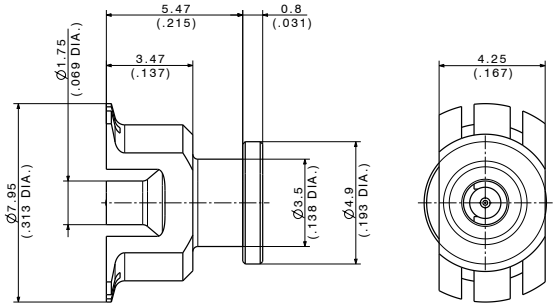

HUBER+SUHNER type	Item no.	Packaging	Notes
82_MMPX-S50-0-2/111_NM	84096711	tape	blister tape containing 10 pcs.
82_MMPX-S50-0-2/111_NM-1	84096752	tape and reel	reeled blister tape containing 750 pcs.

- Semi surface mount (semi-SMD)
- Short print legs
- Decoupling tool 74_Z-0-0-491 or 74_Z-0-0-555 recommended



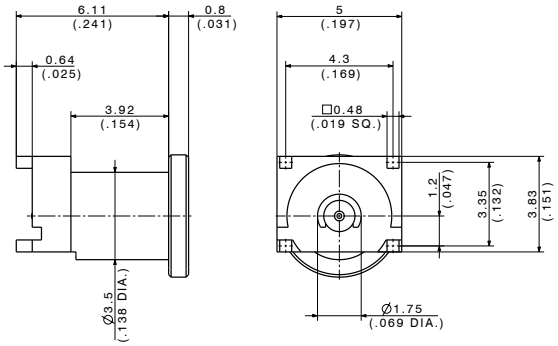

HUBER+SUHNER type	Item no.	Packaging	Notes
96_MMPX-50-0-2/111_NM-1	84093961	tape	blister tape containing 10 pcs.
96_MMPX-50-0-2/111_NM	84093966	tape/reel	reeled blister tape containing 750 pcs.

Cable groups see page 32 | Assembly tools see page 531 | Mounting holes/PCB layouts see page 561

L'IMPULSION
Retrouvez nous sur
www.limpulsion.fr

Series MMPX – PCB connectors

Straight PCB jacks (female)

- Semi surface mount (semi-SMD)
- Long print legs



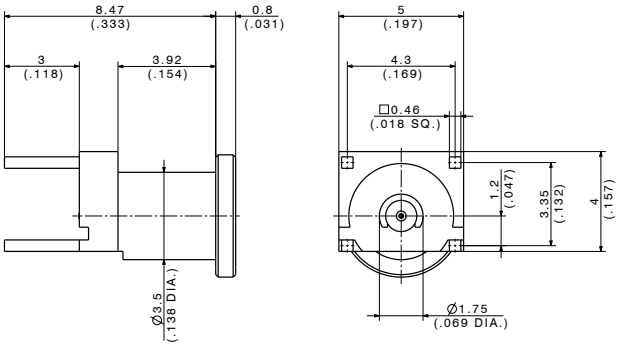

HUBER+SUHNER type	Item no.	Packaging	Notes
96_MMPX-50-0-3/111_NM-1	84099981	tape	blister tape containing 10 pcs.
96_MMPX-50-0-3/111_NM	84099988	tape and reel	reeled blister tape containing 500 pcs.

Straight PCB jacks (female), edge-mount

- Full surface mount (SMD)
- PCB cut out required
- Decoupling tool 74_Z-0-0-491 or 74_Z-0-0-555 recommended



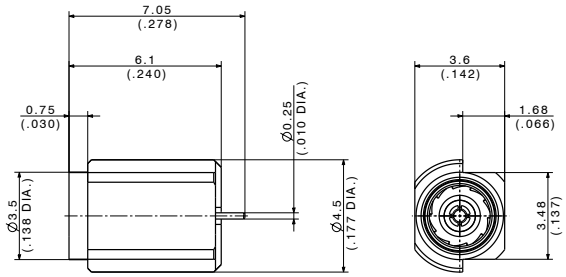

HUBER+SUHNER type	Item no.	Packaging	Notes
92_MMPX-S50-0-1/111_NM	84009138	tape	blister tape containing 10 pcs.
92_MMPX-S50-0-1/111_NM-1	84009140	tape and reel	reeled blister tape containing 500 pcs.

Cable groups see page 32 | Assembly tools see page 531 | Mounting holes/PCB layouts see page 561

L'IMPULSION
Retrouvez nous sur
www.limpulsion.fr

Series MMPX – PCB connectors

Straight PCB jacks (female), edge-mount

- Full surface mount (SMD)
- PCB cut out required
- Extra shielded for EMF sensitive applications
- Operating range at up to 26.5 GHz
- Decoupling tool 74_Z-0-0-491 or 74_Z-0-0-555 recommended



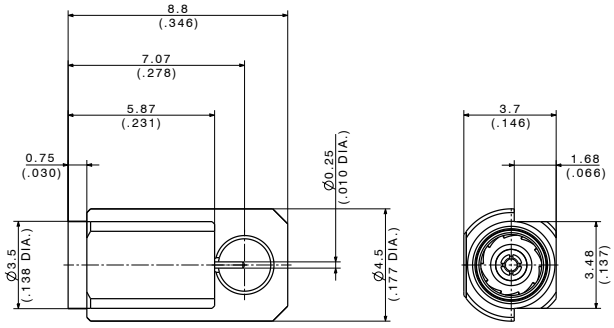

HUBER+SUHNER type	Item no.	Packaging
92_MMPX-S50-0-2/111_NE	84016110	single

- Full surface mount (SMD)
- No PCB cut-out required
- Operating range at up to 15 GHz
- Decoupling tool 74_Z-0-0-491 or 74_Z-0-0-555 recommended



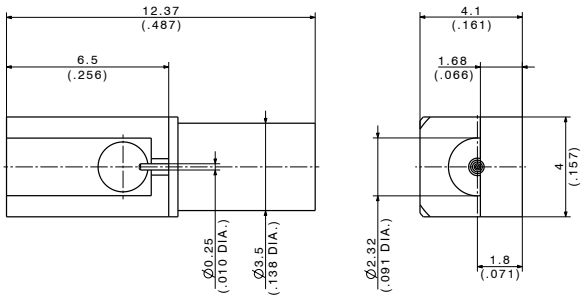

HUBER+SUHNER type	Item no.	Packaging	Notes
92_MMPX-S50-0-3/111_NM-1	84100614	tape	blister tape containing 10 pcs.
92_MMPX-S50-0-3/111_NM	84096563	tape and reel	blister tape containing 1750 pcs.

Cable groups see page 32 | Assembly tools see page 531 | Mounting holes/PCB layouts see page 561

Series MMPX – decoupling tools

"All-round" decoupling tool

This decoupling tool is suitable for all kind of MMPX combinations.

HUBER+SUHNER type	Item no.
74_Z-0-0-555	84020011

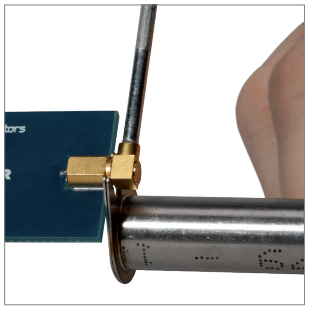



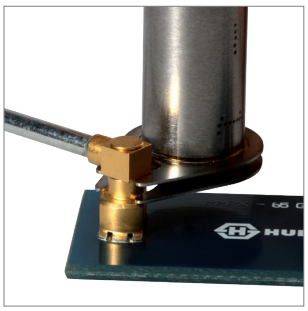

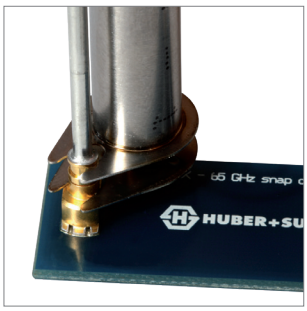



"PCB" decoupling tool

This high-end decoupling tool is especially suited for decoupling MMPX combinations when the PCB connectors are placed very close to each other. The anodized surface is non-conductive and helps to prevent short-cutting circuits on the PCB.

Note: Suitable for flexible cables only!

Possible combination of patterns
11_MMPX/82_MMPX
11_MMPX/92_MMPX
11_MMPX/96_MMPX
16_MMPX/82_MMPX
16_MMPX/96_MMPX

HUBER+SUHNER type	Item no.
74_Z-0-0-491	84114252

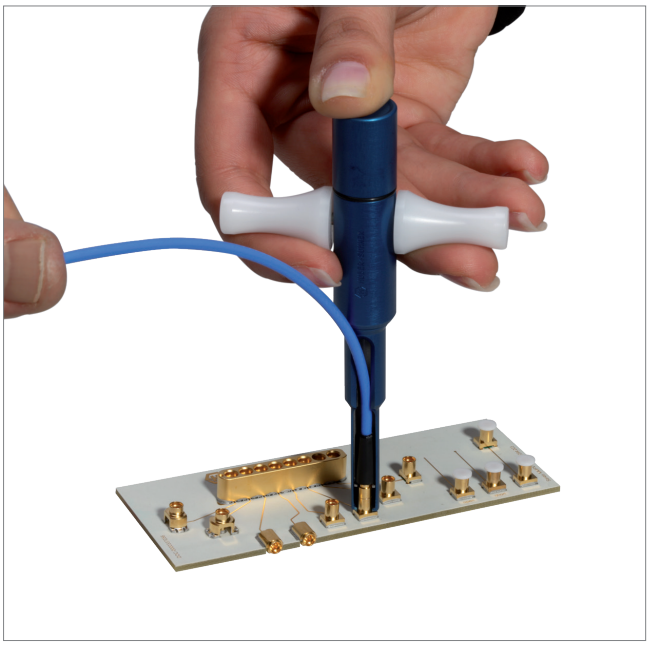

Cable groups see page 32 | Assembly tools see page 531 | Mounting holes/PCB layouts see page 561

L'IMPULSION
Retrouvez nous sur
www.limpulsion.fr

L'IMPULSION | Retrouvez nous sur www.limpulsion.fr

Series SMB – subminiature connectors

Description

The HUBER+SUHNER subminiature connectors series SMB and SMC have the same basic design. They only differ with regard to their coupling mechanism. HUBER+SUHNER SMB subminiature connectors are suitable for applications from DC up to 4 GHz.

Content

Description	153
Interface dimensions in mm/inches	153
Technical data	154
Cable connectors	155
Receptacles with solder end	159
PCB connectors	160

Interface dimensions (mm/inches)

Plug (male)

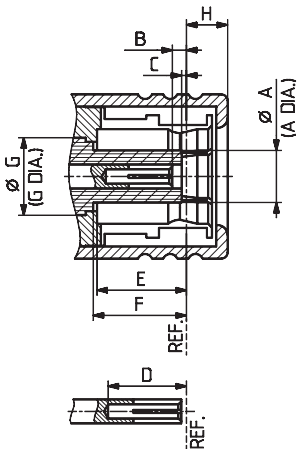

	Plug		Jack	
	min.	max.	min.	max.
	–	2.06/0.081	2.08/0.082	–
B	0.18/0.007	0.94/0.037	–	0.18/0.007
C	0.18/0.007	–	–	0.18/0.007
D	2.97/0.117	–	–	2.97/0.117
E	3.58/0.141	–	1.32/0.052	–
F	3.58/0.141	–	3.66/0.144	3.71/0.146
G	3.05/0.120 nom.		0.48/0.019	0.53/0.021
H	–	1.63/0.064	0.00/0.000	–
I	–	–	3.05/0.120 nom.	
K	–	–	3.33/0.131	3.58/0.141
L	–	–	1.65/0.065	–

Jack (female)

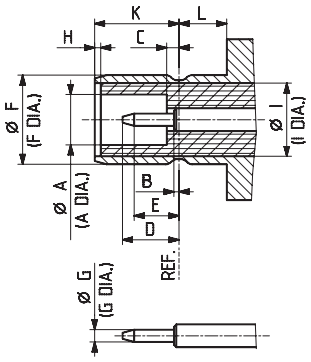

Interface dimensions conformable to the standards:

International:	IEC 60169-10
Europe:	CECC 22130
USA:	MIL-PRF-39012
	Interface MIL-STD-348/311

L'IMPULSION
Retrouvez nous sur
www.limpulsion.fr

Series SMB – technical data

Electrical data	Requirements
Impedance	50 Ω
Frequency range	DC to 4 GHz
Dielectric withstanding voltage (at sea level)	750 V rms, 50 Hz (depending on cable)
Working voltage (at sea level)	250 V rms for cables with 1 mm/0.039 in. dielectric 335 V rms for cables with 2 mm/0.078 in. dielectric
Insulation resistance	≥10^4 MΩ
Contact resistance • Centre contact • Outer contact	 ≤ 5 mΩ ≤ 2.5 mΩ
RF leakage (measured at 1 GHz)	≥ 55 dB

Mechanical data	Requirements
Engagement force	8 to 63 N/1.8 to 14.2 lbs
Disengagement force	8 to 63 N/1.8 to 14.2 lbs
Contact captivation	≥ 18 N/4.0 lbs
Cable retention force [1]	see pages 32 – 41
Durability (matings)	≥ 500

Environmental data	Requirements
Temperature range	–65 to +165 °C/–85 to +329 °F
Climatic category	IEC → 55/155/21
Thermal shock	MIL-STD-202, method 107, condition B
Moisture resistance	MIL-STD-202, method 106
Corrosion	saltspray test acc. to MIL-STD-202, method 101, condition B
Vibration	MIL-STD-202, method 204, condition B

Material data		
Connector parts	Material	Plating
Bodies	brass	gold or SUCOPLATE®
Pin contacts	brass	gold
Socket contacts	copper-beryllium alloy	gold
Crimp ferrules	copper/brass	gold or SUCOPLATE®
Springs and washers	copper-beryllium alloy	gold or SUCOPLATE®
Insulators	PTFE or PFA	

Performance values are typical for the connector interface. Individual component or connector performance may vary depending on the connector design, attachment (e.g. cable, PCB) or application. For detailed specifications please refer to the specific data sheets on our website www.hubersuhner.com.

[1] Value considers maximum load of the cables without irreversible variations of specifications.

L'IMPULSION | Retrouvez nous sur www.limpulsion.fr

Series SMB – cable connectors

Straight cable plugs (male)

For semi-rigid cables

- Open entry
- Cable entry soldered
- Centre contact crimp or soldered



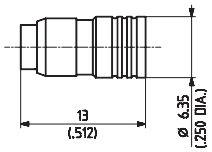

HUBER+SUHNER type	Item no.	Cable group (example)	Packaging	Assembly instruction	Crimp insert
11_SMB-50-2-13/111_NE 11_SMB-50-2-13/111_NH	22543362 22658765	Y3, Y11, (EZ_86)	single bulk 100 pcs.	9002	1

For flexible cables

- Closed entry
- HUBER+SUHNER full crimp
- Taper sleeves see page 554



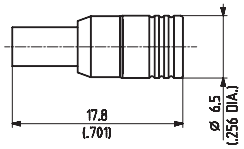

HUBER+SUHNER type	Item no.	Cable group (example)	Packaging	Assembly instruction	Crimp insert	Notes
11_SMB-50-1-40/111_NE 11_SMB-50-1-40/111_NH	22648050 22650186	U1 (RG_178_B/U, ENVIROFLEX_178)	single bulk 100 pcs.	3077	1 A	low retention
11_SMB-50-2-40/111_NE 11_SMB-50-2-40/111_NH	22648051 23014146	U2 (RG_316/U, ENVIROFLEX_316)	single bulk 100 pcs.			
11_SMB-50-2-40/133_NE 11_SMB-50-2-40/133_NH	22648498 22650179		single bulk 100 pcs.			
11_SMB-50-2-41/111_NE 11_SMB-50-2-41/111_NH	22648052 22650536	U4 (K_02252_D, ENVIROFLEX_316_D)	single bulk 100 pcs.			

Cable groups see page 32 | Assembly tools see page 531 | Mounting holes/PCB layouts see page 561

L'IMPULSION Retrouvez nous sur www.limpulsion.fr

Series SMB – cable connectors

Right angle cable plugs (male)

For semi-rigid cables

- Closed entry
- Cable entry soldered
- Centre contact soldered



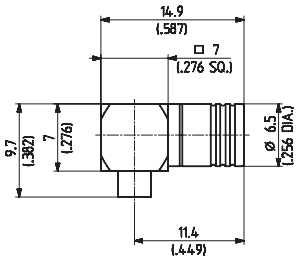

HUBER+SUHNER type	Item no.	Cable group (example)	Packaging	Assembly instruction
16_SMB-50-2-23/111_NE	22644079	Y3, Y11 (EZ_86)	single	9160

For flexible cables

- Closed entry
- HUBER+SUHNER full crimp
- Taper sleeves see page 554



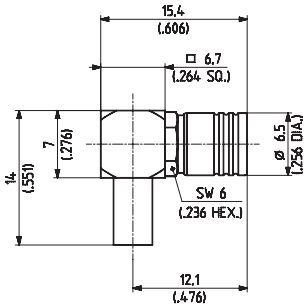

HUBER+SUHNER type	Item no.	Cable group (example)	Packaging	Assembly instruction	Crimp insert	Notes
16_SMB-50-2-110/111_NE	22659113	U2 (RG_316_/U, ENVIROFLEX_316)	single	3096	1 A	high retention, open entry
16_SMB-50-2-110/133_NH	22659116	U2 (RG_316_/U, ENVIROFLEX_316)	bulk 100 pcs.			
16_SMB-50-2-111/111_NH 16_SMB-50-2-111/111_NH-1	22659120 23015343	U4 (K_02252_D, ENVIROFLEX_316_D)	bulk 100 pcs. bulk 100 pcs.			high retention, open entry
16_SMB-50-1-40/111_NE	22648053	U1 (RG_178_B/U, ENVIROFLEX_178)	single			
16_SMB-50-2-40/111_NE 16_SMB-50-2-40/111_NH	22648054 22650695	U2 (RG_316_/U, ENVIROFLEX_316)	single bulk 100 pcs.			
16_SMB-50-2-41/111_NH	22660335	U4 (K_02252_D, ENVIROFLEX_316_D)	bulk 100 pcs.			

Cable groups see page 32 | Assembly tools see page 531 | Mounting holes/PCB layouts see page 561

L'IMPULSION | Retrouvez nous sur www.limpulsion.fr

Series SMB – cable connectors

Right angle cable plugs (male)

For flexible cables
- Closed entry
- Cable entry crimp
- Centre contact soldered
- Taper sleeves see page 554



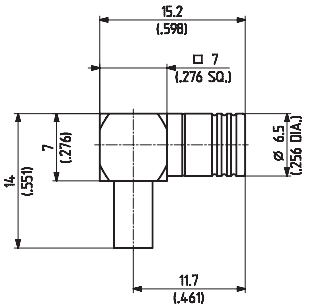

HUBER+SUHNER type	Item no.	Cable group (example)	Packaging	Assembly instruction	Crimp insert	Plating body
16_SMB-50-2-50/111_NE 16_SMB-50-2-50/111_NH	22648057 23011371	U2(RG_316_/U, ENVIROFLEX_316)	single bulk 100 pcs.	9157	A	
16_SMB-50-2-50/133_NH [1]	22650181	U2 (RG_316_/U, ENVIROFLEX_316)	bulk 100 pcs.			SUCOPLATE®
16_SMB-50-2-51/111_NE 16_SMB-50-2-51/111_NH	22648058 22658985	U 4 (K_02252_D, ENVIROFLEX_316_D)	single bulk 100 pcs.			
16_SMB-50-2-51/133_NE [1] 16_SMB-50-2-51/133_NH [1]	23029417 22650182	U 4 (K_02252_D, ENVIROFLEX_316_D)	single bulk 100 pcs.			SUCOPLATE®

Straight cable jacks (female)

For flexible cables
- HUBER+SUHNER full crimp
- Taper sleeves see page 554

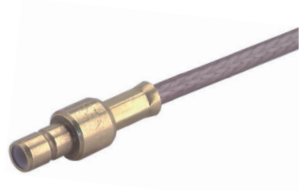

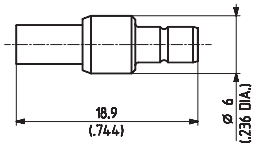

HUBER+SUHNER type	Item no.	Cable group (example)	Packaging	Assembly instruction	Crimp insert
21_SMB-50-1-10/111_NE [2]	22543424	U1 (RG_178_B/U, ENVIROFLEX_178)	single	3077	1 A
21_SMB-50-2-10/111_NE 21_SMB-50-2-10/111_NH	22640205 22651810	U2 (RG_316_/U, ENVIROFLEX_316)	single bulk 100 pcs.		
21_SMB-50-2-11/111_NE	22642407	U4, (K_02252_D, ENVIROFLEX_316_D)	single		

[1] Cost effective
[2] Centre contact not captivated

Cable groups see page 32 | Assembly tools see page 531 | Mounting holes/PCB layouts see page 561

Series SMB – cable connectors

Straight bulkhead cable jacks (female)

For semi-rigid cables

- Cable entry soldered
- Centre contact crimp or soldered



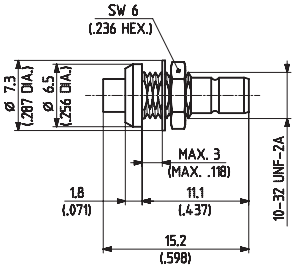

HUBER+SUHNER type	Item no.	Cable group (example)	Packaging	Assembly instruction	Mounting hole	Crimp insert
24_SMB-50-2-13/111_NE [1] 24_SMB-50-2-13/111_NH [1]	22640822 84047710	Y3, Y11, Y16 (EZ_86)	single bulk 100 pcs.	9002	ML 11	1

For flexible cables

- HUBER+SUHNER full crimp
- Rear mounting
- Mounting hole ML 11
- Taper sleeves see page 554



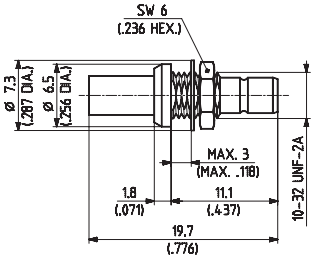

Fig. 1

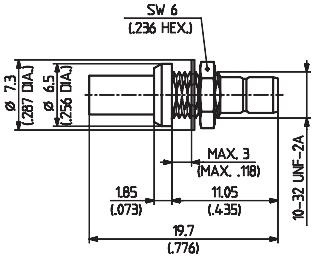

Fig. 2

HUBER+SUHNER type	Item no.	Cable group (example)	Packaging	Assembly instruction	Crimp insert	Plating body	Fig.
24_SMB-50-1-10/111_NE [1] 24_SMB-50-1-10/111_NH	22543631 22645690	U1 (RG_178_B/U, ENVIROFLEX_178)	single bulk 100 pcs.	3077	1 A		1
24_SMB-50-2-110/111_NE 24_SMB-50-2-110/111_NH	22658161 22659126	U2 (RG_316_/U, ENVIROFLEX_316)	single bulk 100 pcs.				2
24_SMB-50-2-110/133_NH [2]	22659128	U2 (RG_316_/U, ENVIROFLEX_316)	bulk 100 pcs.			SUCOPLATE®	
24_SMB-50-2-111/111_NH	22659130	U2 (RG_316_/U, ENVIROFLEX_316)	bulk 100 pcs.				
24_SMB-50-2-111/133_NH [2]	23005564	U4 (K_02252_D, ENVIROFLEX_316_D)	bulk 100 pcs.			SUCOPLATE®	

[1] Cost effective
[2] Centre contact not captivated

Cable groups see page 32 | Assembly tools see page 531 | Mounting holes/PCB layouts see page 561

L'IMPULSION | Retrouvez nous sur www.limpulsion.fr

Series SMB – receptacles with solder end

Receptacle jack (female)

- Bulkhead mounted
- Rear mounting
- Insulating washers see page 556



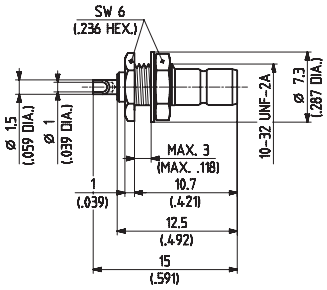

HUBER+SUHNER type	Item no.	Packaging	Mounting hole
22_SMB-50-0-3/111_NE	22640207	single	ML 11

- Bulkhead mounted
- Hermetically sealed
- RoHS compliant alternative on request



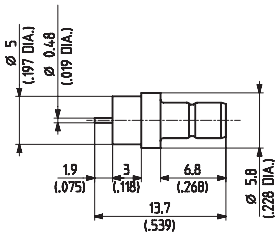

HUBER+SUHNER type	Item no.	Packaging	Mounting hole	Notes
22_SMB-50-0-5/111_NE	22640209	single	ML 90	panel sealing: laser beam welding leak rate ≤ 10^{-8} Torr l/s (atm cc/s)

- Bulkhead mounted
- Front mounting
- Insulating washers see page 556



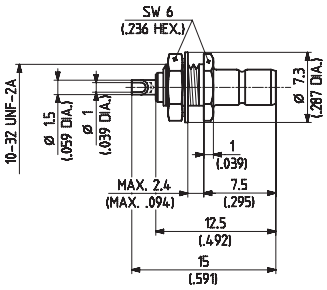

HUBER+SUHNER type	Item no.	Packaging	Mounting hole	Plating body
22_SMB-50-0-2/133_NH	22651503	bulk 100 pcs.	ML 11	SUCOPLATE®

Cable groups see page 32 | Assembly tools see page 531 | Mounting holes/PCB layouts see page 561

L'IMPULSION
Retrouvez nous sur
www.limpulsion.fr

Series SMB – PCB connectors

Straight PCB plug (male)

- 2.54 mm/0.100 in. grid
- Open entry



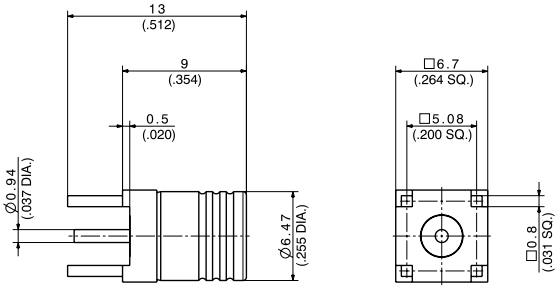

HUBER+SUHNER type	Item no.	Mounting hole	Plating body	Notes
81_SMB-50-0-41/111_NE	22648059	ML 15	gold	with stand-off

Straight PCB jacks (female)

- 2.54 mm/0.100 in. grid



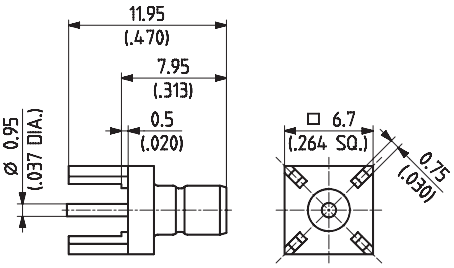

Fig. 1

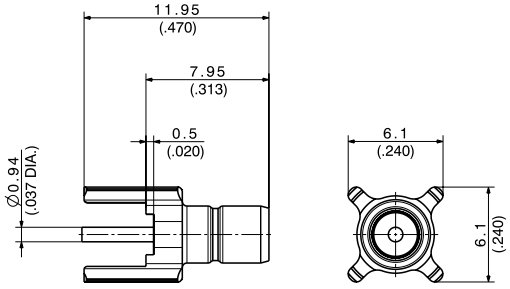

Fig. 2

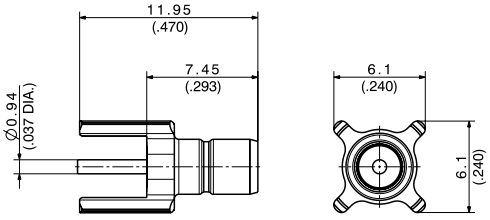

Fig. 3

HUBER+SUHNER type	Item no.	Packaging	Mounting hole	Plating body	Fig.	Notes
82_SMB-50-0-1/133_NE	22641492	single	ML 15	SUCOPLATE®	1	with stand-off
82_SMB-50-0-1/111_NH-1	23017254	bulk 100 pcs.		SUCOPRO® plating	1	with stand-off
82_SMB-50-0-17/111_NH	23010991	bulk 100 pcs.		SUCOPRO® gold plating	2	with stand-off
82_SMB-50-0-19/111_NH	23011018	bulk 100 pcs.		SUCOPRO® gold plating	3	without stand-off

Cable groups see page 32 | Assembly tools see page 531 | Mounting holes/PCB layouts see page 561

L'IMPULSION
Retrouvez nous sur
www.limpulsion.fr

Series SMB – PCB connectors

Straight PCB jacks (female)

- Surface mount type SMT

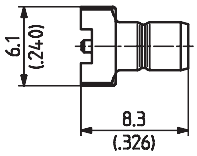



HUBER+SUHNER type	Item no.	Packaging	Mounting hole	Plating body
82_SMB-S50-0-18/111_NH	23010995	bulk 100 pcs.	ML 122	SUCOPRO® gold plating

Right angle PCB jacks (female)

- 2.54 mm/0.100 in. grid
- With stand-off



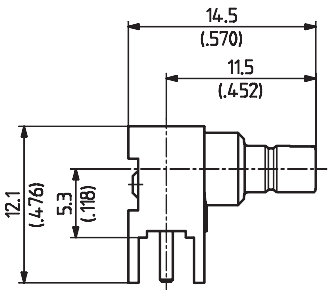

Fig. 1

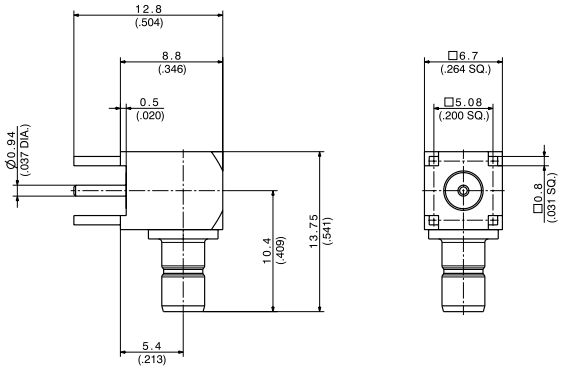

Fig. 2

HUBER+SUHNER type	Item no.	Packaging	Mounting hole	Plating body	Fig.
85_SMB-Z50-0-19/111_NE 85_SMB-Z50-0-19/111_NH	84041359 23010999	single bulk 100 pcs.	ML 15	SUCOPRO® gold plating	1
85_SMB-50-0-1/111_NE 85_SMB-50-0-1/111_NH	22640235 22645989	single bulk 100 pcs.		gold	2
85_SMB-50-0-1/133_NE [1] 85_SMB-50-0-1/133_NH [1]	22641270 22644524	single bulk 100 pcs.		SUCOPLATE®	

[1] Cost effective

Cable groups see page 32 | Assembly tools see page 531 | Mounting holes/PCB layouts see page 561

L'IMPULSION
Retrouvez nous sur
www.limpulsion.fr

L'IMPULSION
Retrouvez nous sur
www.limpulsion.fr

Series SMC – subminiature connectors

Description

The HUBER+SUHNER SMC subminiature connector series is based on the same design as the SMB series. But due to its screw-on coupling mechanism, the HUBER+SUHNER SMC subminiature connectors are suitable for applications up to 10 GHz.

Content

Description	163
Interface dimensions in mm/inches	163
Technical data	164
Cable connectors	165
Receptacles	168
PCB connectors	169

Interface dimensions (mm/inches)

Plug (male)

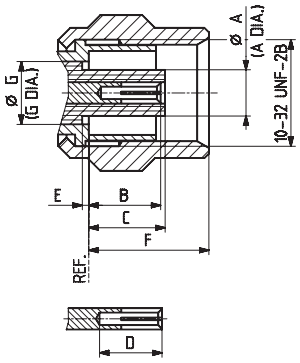

	Plug		Jack	
	min.	max.	min.	max.
A	-	2.60/0.081	2.08/0.082	-
B	2.85/0.112	3.40/0.134	3.40/0.134	-
C	-	3.40/0.134	3.40/0.134	-
D	2.79/0.110	-	0.61/0.024	-
E	0.00/0.000	-	-	2.13/0.084
F	-	5.92/0.233	-	3.71/0.146
G	3.05/0.120 nom.		0.48/0.019	0.53/0.021
H	-	-	0.00/0.000	-
I	-	-	3.05/0.120 nom.	
K	-	-	5.94/0.234	-

Jack (female)

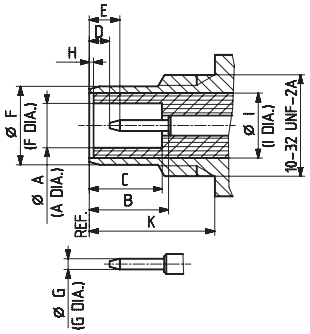

Interface dimensions conformable to the standards:

International:	IEC 60169-9
Europe:	CECC 22140
USA:	MIL-PRF-39012

L'IMPULSION Retrouvez nous sur www.limpulsion.fr

Series SMC – technical data

Electrical data	Requirements
Impedance	50 Ω
Frequency range	DC to 10 GHz
Dielectric withstanding voltage (at sea level)	750 V rms, 50 Hz (depending on cable)
Working voltage (at sea level)	250 V rms for cables with 1 mm/0.039 in. dielectric 335 V rms for cables with 2 mm/0.078 in. dielectric
Insulation resistance	≥10^4 MΩ
Contact resistance • Centre contact • Outer contact	 ≤ 5 mΩ ≤ 2.5 mΩ
RF leakage (measured at 1 GHz)	≥ 90 dB

Mechanical data	Requirements
Coupling nut torque • Recommended	 25 to 35 Ncm/2.2 to 3.1 in lbs
Coupling nut retention force	≥ 150 N/33.72 lbs
Contact captivation	≥ 10 N/2.25 lbs
Cable retention force [1]	see pages 32 – 41
Durability (matings)	≥ 500

Environmental data	Requirements
Temperature range	–65 to +165 °C/–85 to +329 °F
Climatic category	IEC → 55/155/21
Thermal shock	MIL-STD-202, method 107, condition B
Moisture resistance	MIL-STD-202, method 106
Corrosion	saltspray test acc. to MIL-STD-202, method 101, condition B
Vibration	MIL-STD-202, method 204, condition D

Material data		
Connector parts	Material	Plating
Bodies	brass	SUCOPLATE®/SUCOPRO® gold plating/ gold
Pin contacts	brass	gold
Socket contacts	copper-beryllium alloy	gold
Crimp ferrules	copper/brass	SUCOPLATE®/SUCOPRO® gold plating/ gold
Coupling nut	brass	SUCOPLATE®/SUCOPRO® gold plating/ gold
Insulators	PTFE or PFA	

Performance values are typical for the connector interface. Individual component or connector performance may vary depending on the connector design, attachment (e.g. cable, PCB) or application. For detailed specifications please refer to the specific data sheets on our website www.hubersuhner.com.

[1] Value considers maximum load of the cables without irreversible variations of specifications.

L'IMPULSION | Retrouvez nous sur www.limpulsion.fr

Series SMC – cable connectors

Straight cable plugs (male)

For semi-rigid cables

- Cable entry soldered
- Centre contact soldered

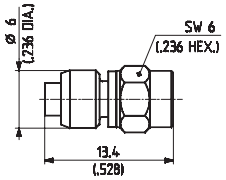



HUBER+SUHNER type	Item no.	Cable group (example)	Packaging	Assembly instruction
11_SMC-50-2-13/111_NH	22650675	Y3, Y11, Y15 (EZ_86)	bulk 100 pcs.	9002

For flexible cables

- HUBER+SUHNER full crimp
- Taper sleeves see page 554

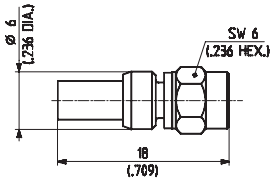

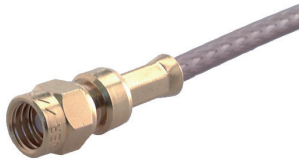

HUBER+SUHNER type	Item no.	Cable group (example)	Packaging	Plating body	Assembly instruction	Crimp insert
11_SMC-50-1-10/111_NH	22648629	U1 (RG_178_B/U, ENVIROFLEX_178)	bulk 100 pcs.	gold	3077	1A
11_SMC-50-2-10/111_NE 11_SMC-50-2-10/111_NH	22640811 22645841	U2 (RG_316_/U, ENVIROFLEX_316)	single bulk 100 pcs.	gold		
11_SMC-50-2-10/133_NE	22641528	U2 (RG_316_/U, ENVIROFLEX_316)	single	SUCOPLATE®		
11_SMC-50-2-11/111_NE	22640251	U4 (K_02252_D, ENVIROFLEX_316_D)	single	gold		

Cable groups see page 32 | Assembly tools see page 531 | Mounting holes/PCB layouts see page 561

L'IMPULSION Retrouvez nous sur www.limpulsion.fr

Series SMC – cable connectors

Right angle cable plugs (male)

For semi-rigid cables

- Cable entry soldered
- Centre contact soldered

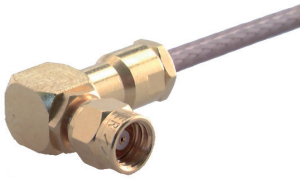

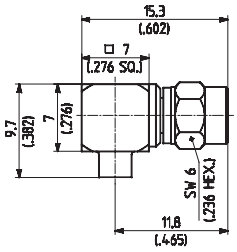

HUBER+SUHNER type	Item no.	Cable group (example)	Packaging	Assembly instruction
16_SMC-50-2-25/111_NE 16_SMC-50-2-25/111_NH	22644126 23003713	Y3, Y11, Y15 (EZ_86)	single bulk 100 pcs.	9160

For flexible cables

- HUBER+SUHNER full crimp
- Taper sleeves see page 554

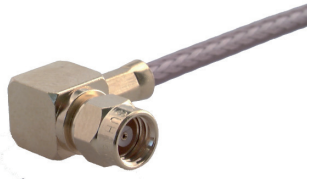

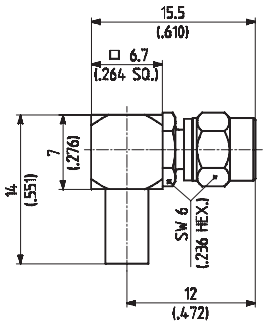

HUBER+SUHNER type	Item no.	Cable group (example)	Packaging	Plating body	Assembly instruction	Crimp insert
16_SMC-50-1-10/111_NE 16_SMC-50-1-10/111_NH	22543364 22648283	U1 (RG_178_B/U, ENVIROFLEX_178)	single bulk 100 pcs.	gold	3096	1A
16_SMC-50-2-10/111_NE 16_SMC-50-2-10/111_NH	22640269 22645323	U2 (RG_316_/U, ENVIROFLEX_316)	single bulk 100 pcs.	gold		
16_SMC-50-2-11/111_NE	22543366	U4 (K_02252_D, ENVIROFLEX_316_D)	single	gold		

Cable groups see page 32 | Assembly tools see page 531 | Mounting holes/PCB layouts see page 561

L'IMPULSION | Retrouvez nous sur www.limpulsion.fr

Series SMC – cable connectors

Right angle cable plugs (male)

For flexible cables
- Cable entry crimp
- Centre contact soldered
- Taper sleeves see page 554



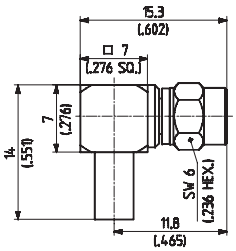

HUBER+SUHNER type	Item no.	Cable group (example)	Packaging	Assembly instruction	Crimp insert
16_SMC-50-1-20/111_NE	22644083	U1 (RG_178_B/U, ENVIROFLEX_178)	single	9157	A
16_SMC-50-2-20/111_NE	22643949	U2 (RG_316_/U, ENVIROFLEX_316)			

Straight cable jacks (female)

For flexible cables
- HUBER+SUHNER full crimp
- Taper sleeves see page 554



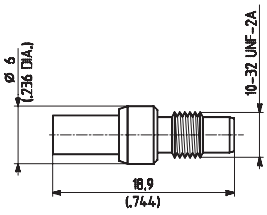

HUBER+SUHNER type	Item no.	Cable group (example)	Packaging	Assembly instruction	Crimp insert
21_SMC-50-2-10/111_NE	22640279	U2 (RG_316_/U, ENVIROFLEX_316)	single	3077	1 A

Cable groups see page 32 | Assembly tools see page 531 | Mounting holes/PCB layouts see page 561

Series SMC – cable connectors

For flexible cables
- HUBER+SUHNER full crimp
- Rear mounting
- Taper sleeves see page 554

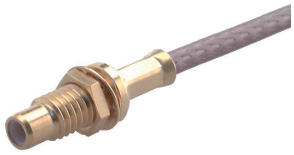

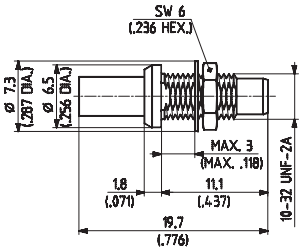

HUBER+SUHNER type	Item no.	Cable group (example)	Packaging	Assembly instruction	Mounting hole	Crimp insert
24_SMC-50-1-10/111_NE [1]	22640290	U1 (RG_178_B/U, ENVIROFLEX_178)	single	3077	ML 11	1 A
24_SMC-50-2-110/111_NE	22660133	U2 (RG_316_/U, ENVIROFLEX_316)	single			

Series SMC – receptacles

Straight bulkhead receptacles, jacks (female)

- Solder end
- Insulating washers see page 556



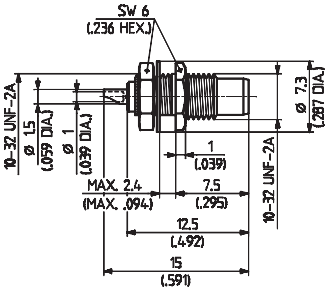

Fig. 1

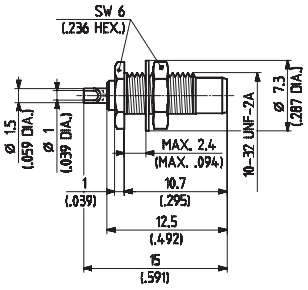

Fig. 2

HUBER+SUHNER type	Item no.	Packaging	Mounting hole	Fig.	Notes
22_SMC-50-0-2/111_NE	22640281	single	ML 11	1	front mounting
22_SMC-50-0-3/111_NE	22640282			2	rear mounting

[1] Centre contact NOT captivated

Cable groups see page 32 | Assembly tools see page 531 | Mounting holes/PCB layouts see page 561

L'IMPULSION | Retrouvez nous sur www.limpulsion.fr

Series SMC – PCB connectors

Straight PCB jacks (female)

- 2.54 mm/0.100 in. grid
- With stand-off



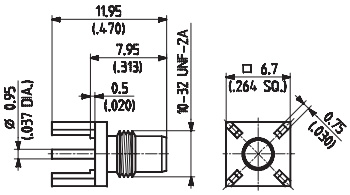

HUBER+SUHNER type	Item no.	Packaging	Mounting hole
82_SMC-50-0-1/111_NE	22640313	single	ML 15
82_SMC-50-0-1/111_NH	22646201	bulk 100 pcs.	

Right angle PCB jacks (female)

- 2.54 mm/0.100 in. grid
- With stand-off



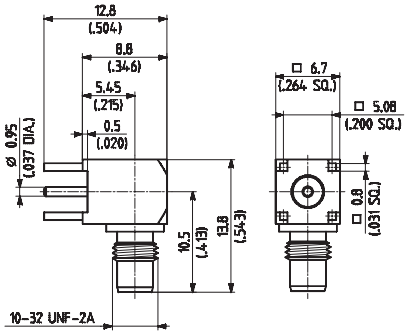

HUBER+SUHNER type	Item no.	Packaging	Mounting hole
85_SMC-50-0-1/111_NE	22640326	single	ML 15
85_SMC-50-0-1/111_NH	22652987	bulk 100 pcs.	
85_SMC-50-0-1/133_NE	22642472	single	

Cable groups see page 32 | Assembly tools see page 531 | Mounting holes/PCB layouts see page 561

L'IMPULSION
Retrouvez nous sur
www.limpulsion.fr

L'IMPULSION
Retrouvez nous sur
www.limpulsion.fr

Series NEX10® – low PIM performance connectors

Description

NEX10 interface offers very low PIM performance together with a robust design and small size. Another key feature of NEX10 is the separation of the electrical contact from the mechanical contact area, which yields a low PIM and high return loss performance independent of the coupling mechanism or applied torque. This characteristic also gives the possibility of offering the connector plug with screw and quick-lock designs, thus simplifying the installation effort while guaranteeing a very high electrical performance for all coupling mechanisms.

Content

Description	171
Applications	171
Features and benefits	171
Technical data	172
Admissible RF power	173
Cable connectors	174
Receptacles	176
Protective cap	176

Applications

NEX10 is the ideal candidate for applications requiring PIM stability and robustness in a small size such as remote radios, distributed antenna systems (DAS), small cells and in-building architecture:

- In small cell applications,
- In low power base stations,
- In multi-operator/multiband DAS,
- Blind mate for panel-to-panel and test and measurement

Features

- Radial contact
- Interface optimized for return loss
- Compact size
- Protection of electrical contact areas
- Multiple coupling mechanisms
- Rubber boot weather protection

Benefits

- Low PIM, independent of coupling mechanism
- Reliable performance eliminating installation errors
- Compact and space saving modules
- Interface safe from installation damages
- Flexibility in installation
- Interface specific boot guaranteeing protection in extreme weather



L'IMPULSION
Retrouvez nous sur
www.limpulsion.fr

Series NEX10® – technical data

Electrical data				
Frequency	DC to 20 GHz			
Impedance	50 Ω			
PIM (Passive Intermodulation)	–166 dBc, 2 × 43 dBm (static and dynamic)			
Power	100 W @ 2 GHz @ 85 °C			
Interface return loss (typical)	DC to 4 GHz	4 to 6 GHz	6 to 10 GHz	10 to 20 GHz
	≥ 36 dB	≥ 34 dB	≥ 30 dB	≥ 20 dB
Working voltage	1000 V			
Screening effectiveness Screw Quick lock	 DC to 6 GHz; ≥ 110 dB DC to 3 GHz: ≥ 90 dB (typical) 3 to 6 GHz: ≥ 70 dB (typical)			

Mechanical data	
Durability (mating cycles)	100 min. 500 for test and measurement adaptors
Mating characteristics Quick lock: engagement force Screw type: rec. torque	 40 N typical 1.5 Nm
Interface retention force	quick lock 150 N min. screw 500 N min
Bending force	≥ 5 Nm
Vibration	100 m/s², 10 – 500 Hz (IEC 61169-1§9.3.3)
Flange height	12.7 mm

Environmental data	
Temperature range	–55 °C to +125 °C
Corrosion	48 h salt mist test (720 h on request)
Interface ingress protection	IP68 (24 h, 1 m, room temp, mated pair)
RoHS	compliant

Performance values are typical for the connector interface. Individual component or connector performance may vary depending on the connector design, attachment (e.g. cable, PCB) or application. For detailed specifications please refer to the specific data sheets on our website www.hubersuhner.com.

L'IMPULSION
Retrouvez nous sur
www.limpulsion.fr

Series NEX10® – admissible RF power

The maximum temperature usually occurs on the connector inner conductor. When connectors are employed in a coaxial cable assembly, the connector should have a center conductor diameter that is equal to or larger than the cable center conductor diameter in order to maximise the power handling of the assembly.

The curves are the results of a typical application and are simulation results. Curves may vary depending on the connector. For specific questions please contact nearest HUBER+SUHNER sales office.

T_{amb} = 25 °C/sea level
VSWR = 1.0

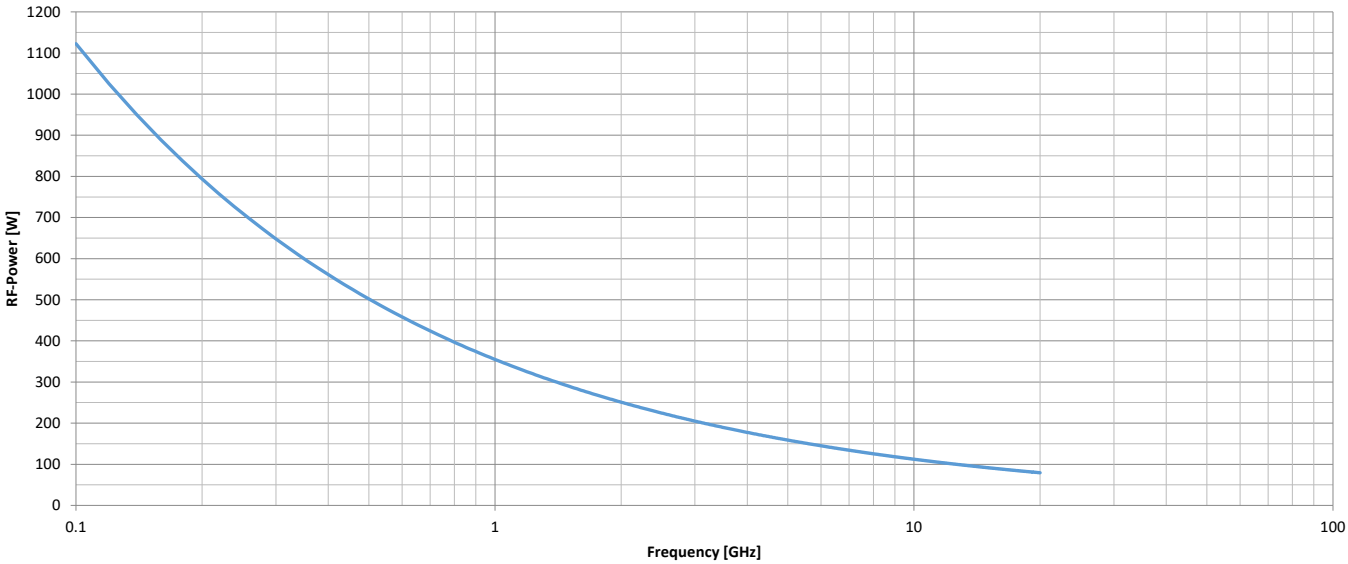

Material data		
Connector parts	Material	Plating
Bodies	brass	SUCOPLATE®, Tin-Nickel, silver, Nickel-Phosphorus
Outer contact	spring bronze	silver
Insulators	PTFE	
Centre contact	brass/CuBe	silver
Gaskets	MVQ	
Coupling nut	brass	SUCOPLATE®

Performance values are typical for the connector interface. Individual component or connector performance may vary depending on the connector design, attachment (e.g. cable, PCB) or application. For detailed specifications please refer to the specific data sheets on our website www.hubersuhner.com.

Cable groups see page 32 | Assembly tools see page 531 | Mounting holes/PCB layouts see page 561

Series NEX10® – cable connectors

Straight cable plugs (male)

- Cable entry soldered
- Centre contact soldered



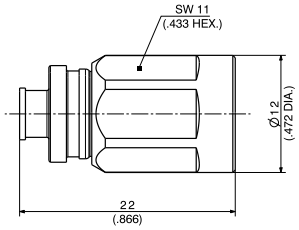

Fig. 1

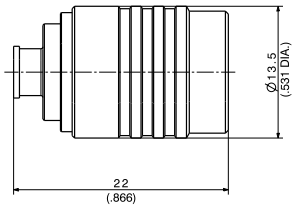

Fig. 2

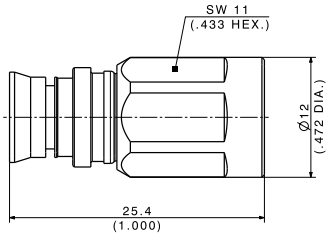

Fig. 3

HUBER+SUHNER type	Item no.	Cable group (example)	Packaging	Fig.
11_NEX10-50-3-X1/003_-H	85091361	Y12, (Sucoform_141)	bulk	1
11_NEX10-50-3-Z2/003_-H	85095347	Y12, (Sucoform_141)	bulk	2
11_NEX10-50-5-X1/000_-H	85095631	M5 (SUCOFEED_1/4_HF)	bulk	3

Right angle jacks (male)

- Cable entry soldered
- Centre contact soldered



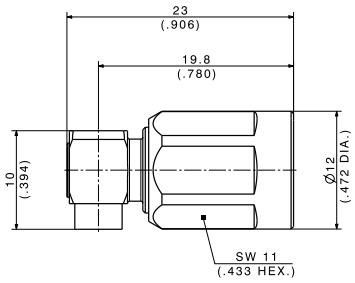

Fig. 1

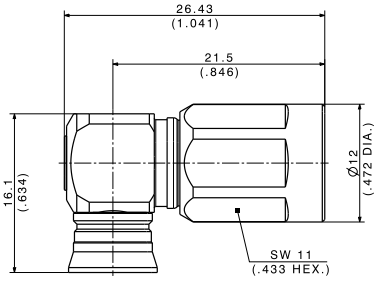

Fig. 2

HUBER+SUHNER type	Item no.	Cable group (example)	Packaging	Fig.
16_NEX10-50-3-X1/003_-H	85102764	Y12, (Sucoform_141)	bulk	1
16_NEX10-50-5-X1/003_-H	85095633	M5 (SUCOFEED_1/4_HF	bulk	2

X: torque, Z: quick-lock

Cable groups see page 32 | Assembly tools see page 531 | Mounting holes/PCB layouts see page 561

L'IMPULSION
Retrouvez nous sur
www.limpulsion.fr

Series NEX10® – cable connectors

Straight cable jacks (female)

For Sucoform, the hand formable cables
- Cable entry soldered
- Centre contact soldered



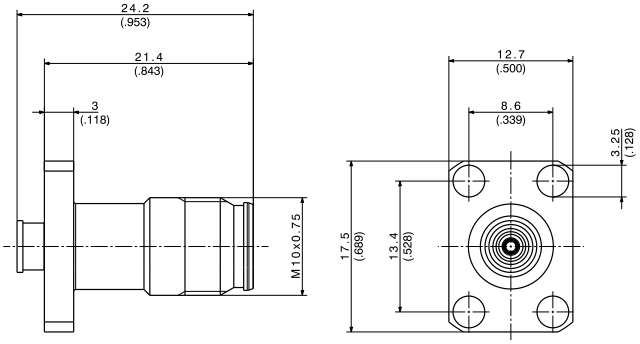

Fig. 1

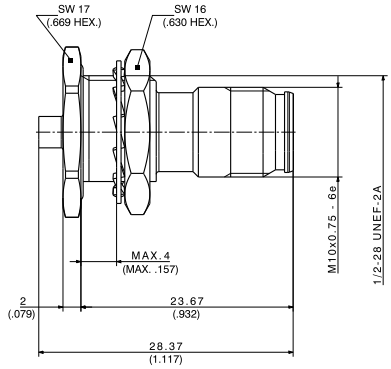

Fig. 2

HUBER+SUHNER type	Item no.	Cable group (example)	Packaging	Fig.
25_NEX10-50-3-1/033_-E	85091413	Y12, (Sucoform_141)	Bulk	1
24_NEX10-50-2-1/033_-Y	85095339	Y16, (Sucoform_86)	Bulk	2

Cable groups see page 32 | Assembly tools see page 531 | Mounting holes/PCB layouts see page 561

L'IMPULSION
Retrouvez nous sur
www.limpulsion.fr

Series NEX10® – receptacles

Straight panel receptacle (jack)



With solder end
- 4 hole, 12.5 mm flange height
- M3 mounting screws

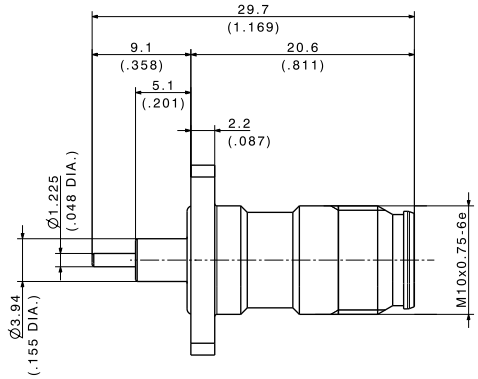

Fig. 1

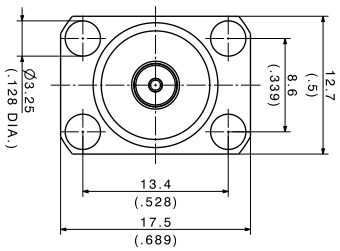

Fig. 2

HUBER+SUHNER type	Item no.	Packaging	Fig.
23_NEX10-50-0-3/033_-Y	85094630	bulk	1

Series NEX10® – protective cap

- Cap for NEX10 female (jack) interface
- Economical design



HUBER+SUHNER type	Item no.	Packaging	Notes
62_NEX10-0-0-1/---_-Z	85095030	bulk	Ingress Protection IP X8

Cable groups see page 32 | Assembly tools see page 531 | Mounting holes/PCB layouts see page 561

L'IMPULSION | Retrouvez nous sur www.limpulsion.fr

Series SSMA – subminiature precision connectors

Description

HUBER+SUHNER SSMA connectors are subminiature precision stainless steel connectors for microwave applications. The SSMA is 30 % smaller than SMA and its standard frequency range is DC to 40 GHz and the extended frequency version operates up to 60 GHz. There is a wide variety of applications for SSMA connectors in telecom, test and measurement, instruments, avionics and defense.
SSMA connectors conform to MIL-PRF-39012 and MIL-STD-348 requirements.

Content

Description	177
Interface dimensions in mm/inches	177
Technical data	178
Cable connectors	180
Receptacles	185
Adaptors	188

Compatibility

50 Ω SSMA connectors are intermateable without restrictions.

Interface dimensions (mm/inches)

Plug (male)

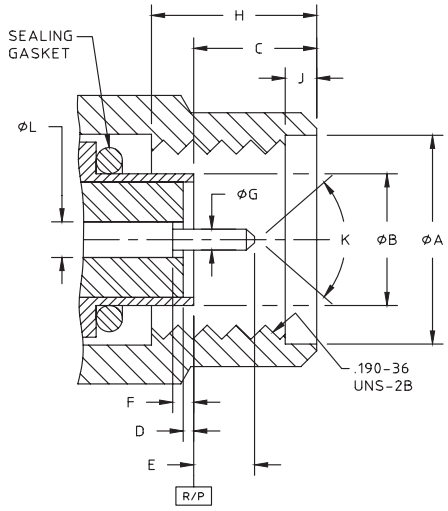

Jack (female)

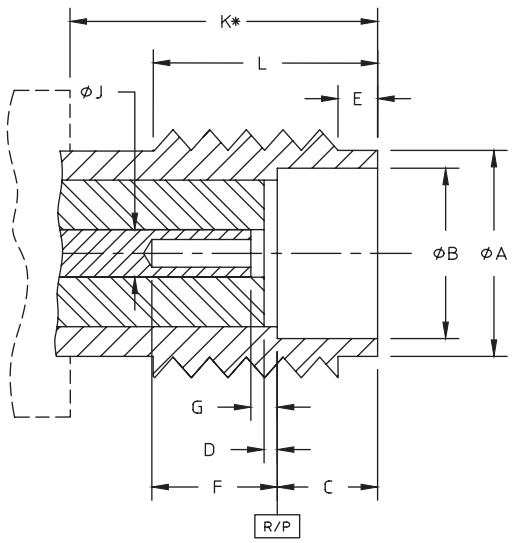

	Plug		Jack	
	min.	max.	min.	max.
A	0.196/4.98	0.202/5.13	0.153/3.88	0.160/4.06
B	0.124/3.15	0.1268/ 3.221	0.127/3.23	0.130/3.30
C	0.100/2.54	0.133/3.38	0-075/1.91	0.077/1.96
D	-	0.005/0.13	-	0.005/0.13
E	0.060/1.52	0.065/1.65	0.020/0.51	0.040/1.02
F	-	0.010/0.25	0.075/1.91	-
G	0.0195/ 0.495	0.0208/ 0.528	-	0.010/0.25
H	0.130/3.30	-		
J	0.015/0.38	0.045/1.14	0.0335/ 0.851	0.0348/ 0.884
K	70°	95°	0.230/5.84	-
L	0.335/ 0.851	0.0348/ 0.884	0.190/4.83	0.210/5.33

Interface dimensions conformable to the standards:

International: IEC 60169-23
USA: MIL-PRF-39012
SSMA interface MIL-STD-348

Series SSMA – technical data

Electrical data	MIL-PRF-39012	Requirements					
Impedance		50 Ω					
Frequecny range for interface		DC to 40 GHz (extended range DC to 65 GHz)					
RL (typical value)		for cable connectors refer to table below					
Cable type		semi-rigid			flexible*		
Cable diameter (mm/in)		1.194/ 0.047	2.184/ 0.086	3.581/ 0.141	1.194/ 0.047**	2.184/ 0.086**	3.581/ 0.141**
RF leakage measured at 3 GHz	3.26	≥ 100 dB	≥ 100 dB	≥ 100 dB	≥ 100 dB	≥ 100 dB	≥ 100 dB
Dieletric withstanding voltage (at sea level, in Vrms, 50 Hz)	3.17	500	750	750	350	500	500
Corona extinction voltage (at 21000 m/70000 ft, in V rms, 50 Hz)	3.22	125	190	190	110	125	125
RF withstanding voltage at 5 MHz (V rms)	3.23	190	250	250	125	190	190
Insulation resistance	3.11	≥ 5 · 103 MΩ					
Conatct resistance	3.16						
Center contact		≥ 3 mΩ					
Outer contact		≥ 5 mΩ					

* Flexible highly shielded cables have RF leakage at 3 GHz ≥ 120 dB.
** Flexible replacement cables for standard size diameters have larger outer diameter due to the jacket.

Typical RL for HUBER+SUHNER standard SSMA cable connectors

Electrical data for extended frequency designs availble upon request.

Typical RL (dB)	Frequency range					
Connector type	1 GHz	2.5 GHz	5 GHz	12.4 GHz	26.5 GHz	40 GHz
Straight connectors	37	37	30	28	25	22
Right angle connectors	37	32	28	25	23	

L'IMPULSION | Retrouvez nous sur www.limpulsion.fr

Series SSMA – technical data

Mechanical data	MIL-PRF-39012	
Recommended coupling nut torque		0.8 to 0.9 Nm/7 to 8 inlbs
Coupling nut retention force	3.25	≥ 270 N/60.7 lbs
Contact captivation	3.12	≥ 27 N/6 lbs
Cable retention force [1]	see suitable cables on pages 32 – 41	
Durability (matings)		≤ 500

[1] Value considers maximum load of the cables without irreversible variations of specifications.

Environmental data	Test conditions
Temperature rage	–55 to +125 °C /–131 to +257 °F
Thermal shock	MIL-STD-202, method 107, method B
Moister resistance	MIL-STD-202, method 106
Corrosion	saltspray test acc. to MIL-STD-202, method 101, method B
Vibration	MIL-STD-202, method 204, method D
Shock	MIL-STD-202, method 213, condition I
RoHS 6 complaint	complaint designs available

Material data

Connector part	Material	Plating
Bodies and nut	steel, corrosion resistant per ASTM A-582, UNS No. S30300, cond. A. Non-magnetic, passivated per SAE-AMS-2700. No dichromate solutions used	nickel plated 100 µin (2.54 µm) min. thk per SAE-AMS-C-26074 or ASTM B-733 SC1, type II class 3
Back nut and mounting nut	steel, corrosion resistant per ASTM A-582, UNS No. S30300, cond. A. Non-magnetic, passivated per SAE-AMS-2700. No dichromate solutions used	nickel alloy per AMS-2433, class 1
Center conductors	beryllium copper alloy per ASTM B-196, UNS No. C17300, TEMPER TD04(H)	gold plated 1.27 µM/50 µIN per ASTM B-488, code C, type II, class 1.27 over nickle plate, 1.27 µM/50 µIN thk per SAE-AMS-QQ-N-290, class 1
Retaininng ring	beryllium copper, per ASTM B-197 UNS No. C17200 TEMPER TD04(H)	
Lockwasher	copper alloy UNS No. C425xx series per ASTM B-591	nickel plated 100 µIN min. thk (2.54 µM) per SAE-AMS-C-26074 or ASTM B-733
Crimp ferrules	seamlessbrass tubing per ASTM B-135, UNS alloy No. C26000	
Insulators	Polytetrafluoroethylene (PTFE) per ASTM D-1710, or ASTM D-4894, type I, grade I	
Gaskets	silicone rubber per GSA CID A-A-59588-2B and SAE-AMS-3304 or low out gassing silicone rubber per GSA CID A-A-59588 or fluorosilicone polymer, fluorosilicone filled with silver per MIL-DLT-83528 type F or other options available upon request	

Notes:
HUBER+SUHNER SSMA connectors satisfy in principle the above technical data.
For detailed specifications refer to the published data sheets on our webspage www.hubersuhner.com or contact your corresponding H+S representative.
Low outgassing alternatives that meet or exceed NASA low outgassing requirements available.

L'IMPULSION Retrouvez nous sur www.limpulsion.fr

Series SSMA – cable connectors

SSMA plug (male)

For semi-rigid cables

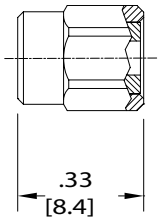

HUBER+SUHNER type	Cable type	Cable group	Packaging
29100	semi-rigid	A92 - 0.086 semi-rigid (2.18/0.086)	single

SSMA jack (female)

For semi-rigid cables

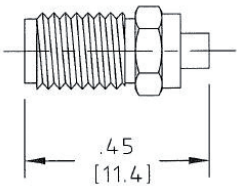

HUBER+SUHNER type	Cable type	Cable group	Packaging
29101	semi-rigid	A92 - 0.086 semi-rigid (2.18/0.086)	single

SSMA plug (male)

For semi-rigid cables

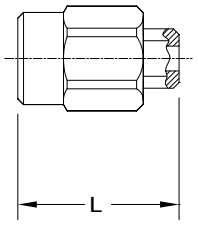

HUBER+SUHNER type	Cable type	Cable dia, mm/in	L, mm/in
29123	0.086 semi-rigid	2.18/0.86	11.18/0.44
29123-1	0.047 semi-rigid	1.19/0.47	12.95/0.51

Cable groups see page 32 | Assembly tools see page 531 | Mounting holes/PCB layouts see page 561

Series SSMA – cable connectors

SSMA bulkhead jack (female)

For flexible cables

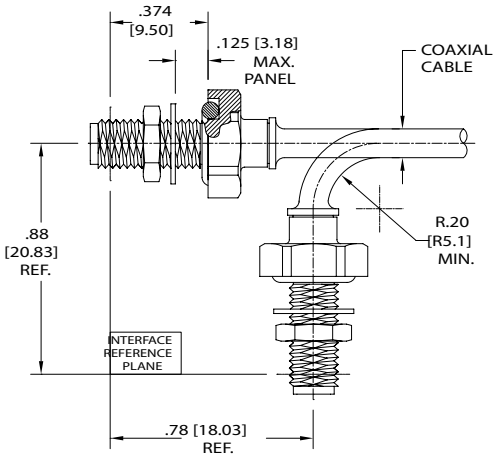

Fig. 1

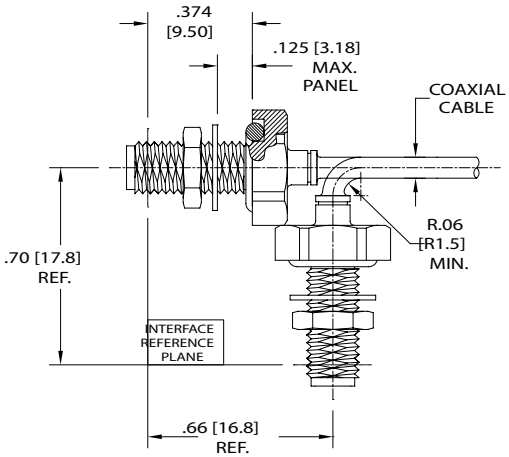

Fig. 2

HUBER+SUHNER type	Cable group (mm/in)	Cable type	Cable	Fig.
29102CR-32-24	A11- (1.70/0.067)	flexible	32024E - Minibend L	1
29102CR-32-41	A20 - (1.14 /0.045)	flexible	32041E - Microbend	2
29102CR-32-81	A10 - (2.18 /0.086)	flexible	32081E - Minibend	1
29102CR-32-85	A21 - (1.22 /0.048)	flexible	32085E - Microbend L	1
29102CR-32-87	A14 - (1.22 /0.048)	flexible	32087E - Minibend LH	1
29102CR-32-91	A13 - (1.14 /0.045)	flexible	32091E - Minibend H	1

Note: Sold on cable assemblies only.

Cable groups see page 32 | Assembly tools see page 531 | Mounting holes/PCB layouts see page 561

Series SSMA – cable connectors

SSMA plug (male)

For flexible cables

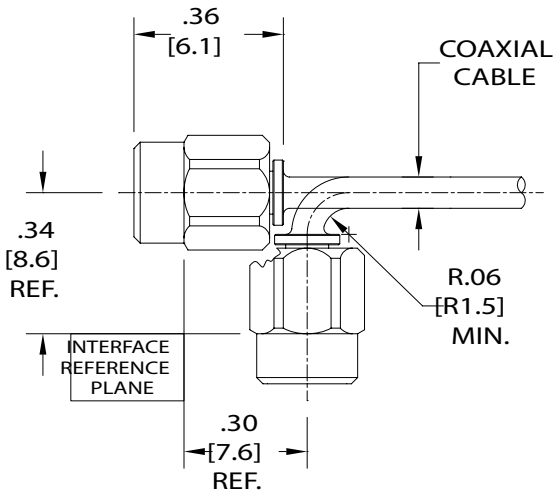

Fig. 1

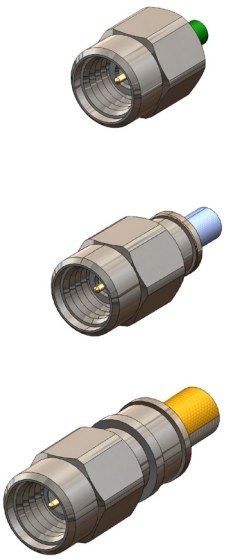

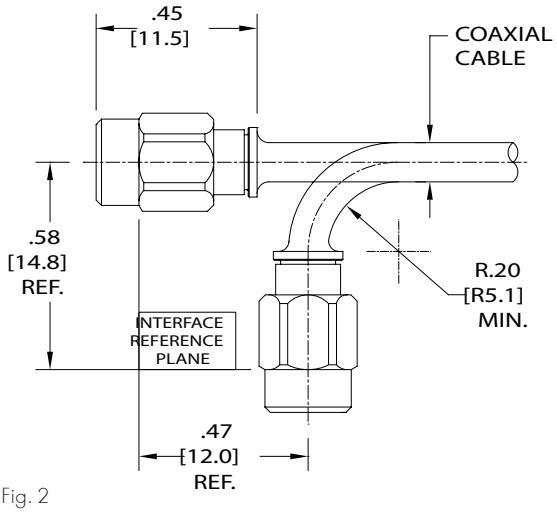

Fig. 2

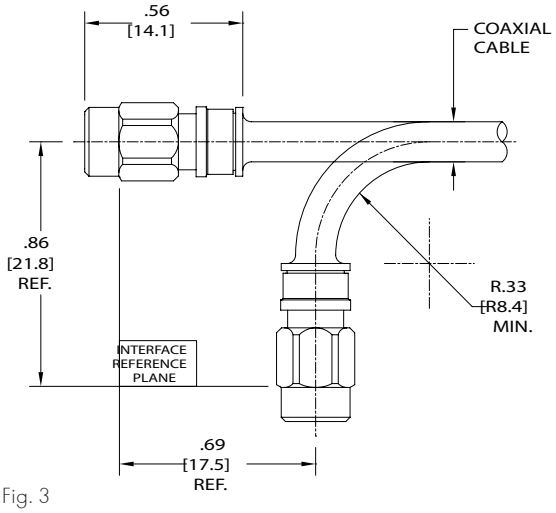

Fig. 3

HUBER+SUHNER type	Cable group (mm/in)	Cable type	Cable	Fig.
29112CR-32-41	A20 - (1.14 /0.045)	flexible	32041E - Microbend	1
29112CR-32-81	A10 - (2.18 /0.086)	flexible	32081E - Minibend	2
29112CR-32-85	A21 - (1.22 /0.048)	flexible	32085E - Microbend L	2
29112CR-32-87	A14 - (1.22 /0.048)	flexible	32087E - Minibend LH	2
29112CR-32-91	A13 - (1.14 /0.045)	flexible	32091E - Minibend H	2
29112CR-32381	A10 - (2.18 /0.086)	flexible	32081E - Minibend	2
29112CR-32-24	A11- (1.70/0.067)	flexible	32024E - Minibend L	2
29112CR-32-21	A32 - (2.36 /0.093)	flexible	32021E - Mini141 H	3
29112CR-32-22	A30 - (2.69 /0.106)	flexible	32022E - Mini141	3
29112CR-32322	A31 - (2.59 /0.102)	flexible	32322E - Mini141 CT	3

Note: Sold on cable assemblies only.

Cable groups see page 32 | Assembly tools see page 531 | Mounting holes/PCB layouts see page 561

L'IMPULSION | Retrouvez nous sur www.limpulsion.fr

Series SSMA – cable connectors

SSMA bulkhead jack (female)

For flexible cables

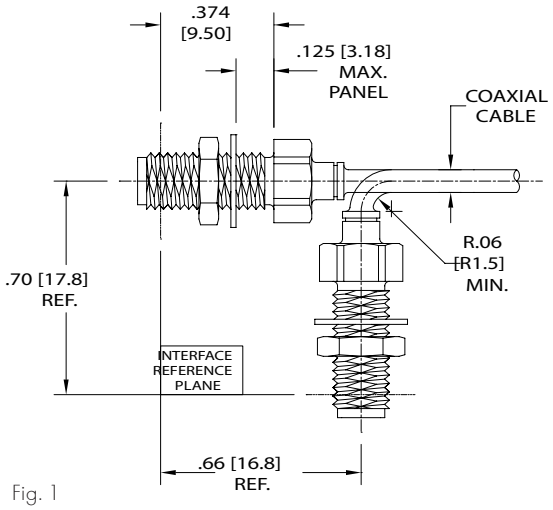

Fig. 1

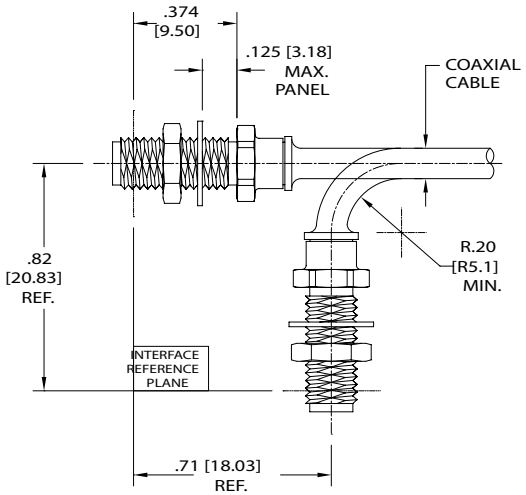

Fig. 2

HUBER+SUHNER type	Connectors	Cable group (mm/in)	Cable type	Cable	Fig.
29125CR-32-41	SSMA jack (f) bulkhead	A20 - (1.14 /0.045)	flexible	32041E - Microbend	1
29125CR-32-24	SSMA jack (f) bulkhead	A11- (1.70/0.067)	flexible	32024E - Minibend L	2
29125CR-32-81	SSMA jack (f) bulkhead	A10 - (2.18 /0.086)	flexible	32081E - Minibend	2
29125CR-32-85	SSMA jack (f) bulkhead	A21 - (1.22 /0.048)	flexible	32085E - Microbend L	2
29125CR-32-87	SSMA jack (f) bulkhead	A14 - (1.22 /0.048)	flexible	32087E - Minibend LH	2
29125CR-32-91	SSMA jack (f) bulkhead	A13 - (1.14 /0.045)	flexible	32091E - Minibend H	2
29125CR-32381	SSMA jack (f) bulkhead	A10 - (2.18 /0.086)	flexible	32081E - Minibend	2

Note: Sold on cable assemblies only.

Cable groups see page 32 | Assembly tools see page 531 | Mounting holes/PCB layouts see page 561

L'IMPULSION
Retrouvez nous sur
www.limpulsion.fr

Series SSMA – cable connectors

SSMA right angle plug (male)

For flexible cables

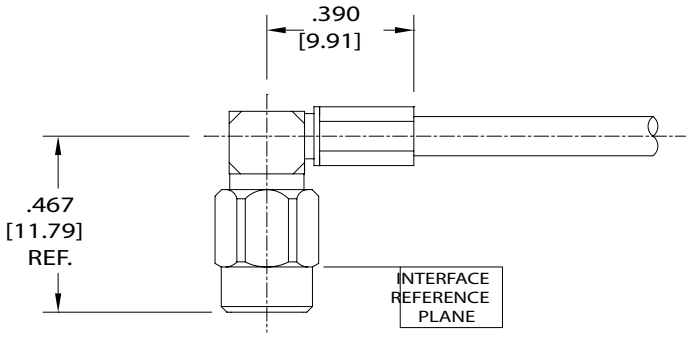

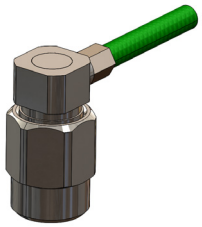

HUBER+SUHNER type	Cable group (mm/in)	Cable type	Cable
29111CR-32-41	A20 - (1.14 /0.045)	flexible	32041E - Microbend
29111CR-32-24	A11- (1.70/0.067)	flexible	32024E - Minibend L
29111CR-32-81	A10 - (2.18 /0.086)	flexible	32081E - Minibend
29111CR-32-85	A21 - (1.22 /0.048)	flexible	32085E - Microbend L
29111CR-32-87	A14 - (1.22 /0.048)	flexible	32087E - Minibend LH
29111CR-32-91	A13 - (1.14 /0.045)	flexible	32091E - Minibend H
29111CR-32381	A10 - (2.18 /0.086)	flexible	32081E - Minibend

Cable groups see page 32 | Assembly tools see page 531 | Mounting holes/PCB layouts see page 561

Series SSMA – receptacles

Straight bulkhead receptacles

Straight panel receptacles

Flanged and panel mount

- SSMA panel mount

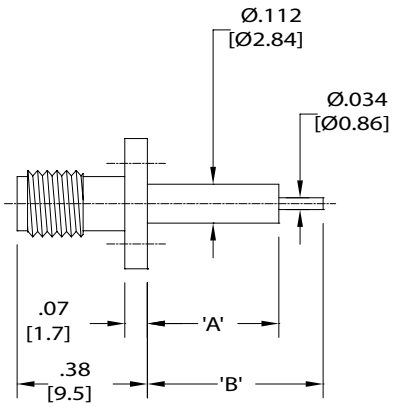

HUBER+SUHNER type	Contact type	A		B	
		in	mm	in	mm
29109-1C	1D	0.035	0.89	0.200	5.08
29109-2C	3F	0.375	9.53	0.500	12.70
29109-3C	4F	0.000	0.00	0.100	2.54
29109-4C	5F	0.000	0.00	0.100	2.54
29109-5C	3F	0.040	1.02	0.070	1.96

- SSMA panel mount plug (male)

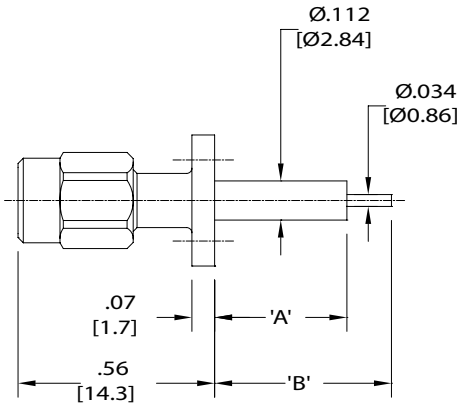

HUBER+SUHNER type	Contact type	A		B	
		in	mm	in	mm
29126-1	1F	0.035	0.89	0.200	5.08
29126-2	3F	0.375	9.53	0.500	12.70
29126-3	4F	0.000	0.00	0.100	2.54
29126-4	5F	0.000	0.00	0.100	2.54

Cable groups see page 32 | Assembly tools see page 531 | Mounting holes/PCB layouts see page 561

Series SSMA – receptacles

- SSMA flanged mount jack (female)

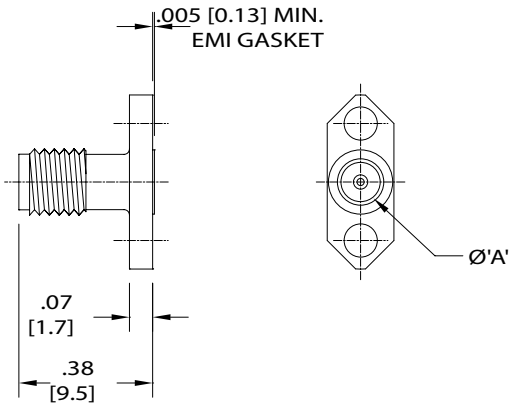

HUBER+SUHNER type	Connectors	Accepts pin dia. mm/in	Ø A mm/in
29196	SSMA jack (f)	0.51 ± 0.03/0.020 ± 0.001	2.79/0.110
29196-1	SSMA jack (f)	0.38 ± 0.03/0.015 ± 0.001	2.79/0.110
29196-2	SSMA jack (f)	0.31 ± 0.03/0.012 ± 0.001	2.11/0.083

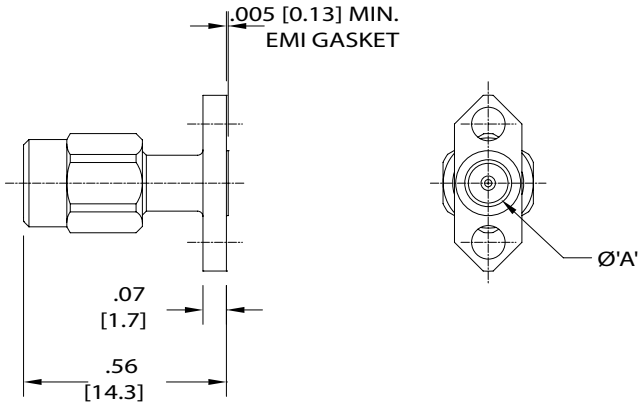

HUBER+SUHNER type	Connectors	Accepts pin dia. mm/in	Ø A mm/in
29195	SSMA plug (m)	0.51 ± 0.03 × 1.65/0.020 ± 0.001 × 0.065	2.79/0.110
29195-1	SSMA plug (m)	0.38 ± 0.03 × 1.27/0.015 ± 0.001 × 0.050	2.79/0.110
29195-2	SSMA plug (m)	0.31 ± 0.03 × 1.02/0.012 ± 0.001 × 0.040	2.11/0.083

Note: replacement gasket part number 632-2.

Cable groups see page 32 | Assembly tools see page 531 | Mounting holes/PCB layouts see page 561

Series SSMA – receptacles

- Panel mount SSMA jack (f)

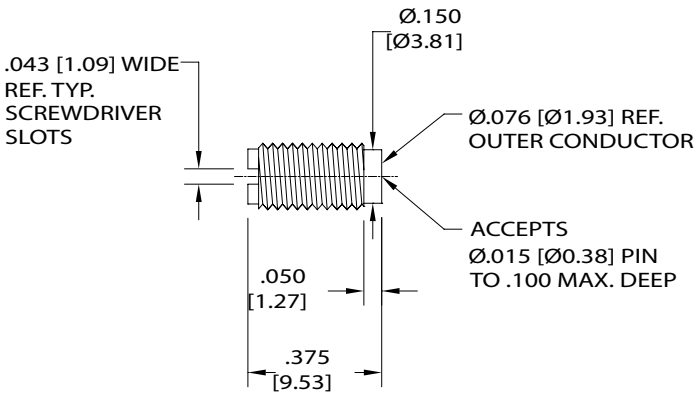

HUBER+SUHNER type	Connectors
29172-3	SSMA jack (f)

Cable groups see page 32 | Assembly tools see page 531 | Mounting holes/PCB layouts see page 561

Series SSMA – adaptors

- Bulkhead adaptor SSMA jack/jack (female/female)

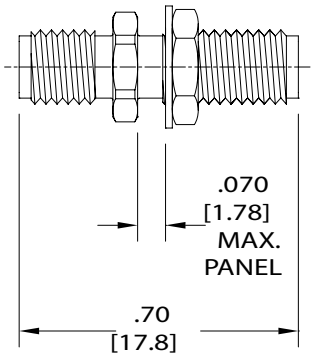

HUBER+SUHNER type	Connectors
29110	adaptor bulkhead SSMA jack (f) to jack (f)

- Adaptor SSMA jack/jack (female/female)

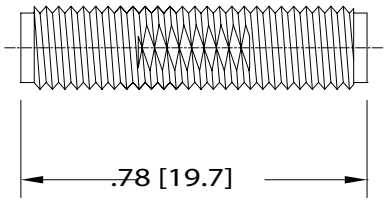

HUBER+SUHNER type	Connectors
29105	adaptor SSMA jack (f) tojack (f)

- Adaptor SSMA plug/plug (male/male)

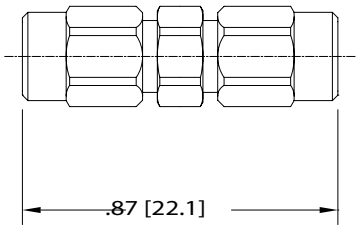

HUBER+SUHNER type	Connectors
29124	adaptor SSMA plug (m)/plug (m)

Cable groups see page 32 | Assembly tools see page 531 | Mounting holes/PCB layouts see page 561

L'IMPULSION | Retrouvez nous sur www.limpulsion.fr

Series SSMA – adaptors

- Adaptor SSMA plug/jack (male/female)

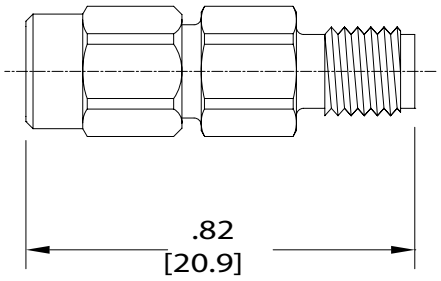

HUBER+SUHNER type	Connectors
29167	adaptor SSMA plug (m)/jack (f)

Hermitic Adaptor

- Hermetic adaptor SSMA jack/jack (female/female)

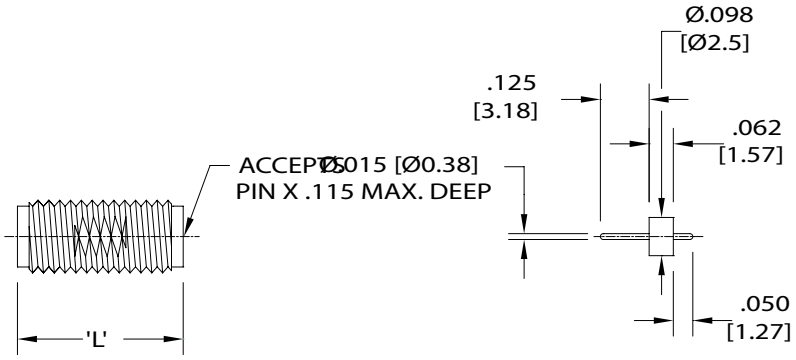

HUBER+SUHNER type	Glass seal P/N	Length	
		mm	in
29172	1805-2	10.80	0.425
29172-1	1805-3	13.94	0.549
29172-2	1805-3	10.80	0.425

Glass bead included with the adaptor, additional glass bead can be purchased separately.

Cable groups see page 32 | Assembly tools see page 531 | Mounting holes/PCB layouts see page 561

L'IMPULSION
Retrouvez nous sur
www.limpulsion.fr

Series SSMA – adaptors

Adaptors in between series

- SSMA jack (f) to SK plug (m)

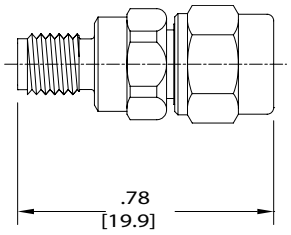

HUBER+SUHNER type	Connectors
29264-3	adaptor SSMA jack (f) to SK plug (m)

Cable groups see page 32 | Assembly tools see page 531 | Mounting holes/PCB layouts see page 561

L'IMPULSION
Retrouvez nous sur
www.limpulsion.fr

Series SMA – coaxial connectors

Description

HUBER+SUHNER SMA connectors are precision connectors for microwave applications up to 18 GHz. The extended frequency version operates with excellent return loss performances up to 26.5 GHz. There is a huge variety of applications for HUBER+SUHNER SMA connectors, as in telecom, test+measurement, instruments, avionics, etc.

The HUBER+SUHNER series SMA is classified into two categories:

- HUBER+SUHNER standard SMA connectors for high end applications or applications subject to rough conditions.
- HUBER+SUHNER ECO SMA connectors for high volume applications.

Content

Description	191
Interface dimensions in mm/inches	191
Features	191
Technical data	192
Cable connectors	195
Receptacles	211
PCB connectors	219
Protective caps and shorts	221

Interface dimensions (mm/inches)

Plug (male)

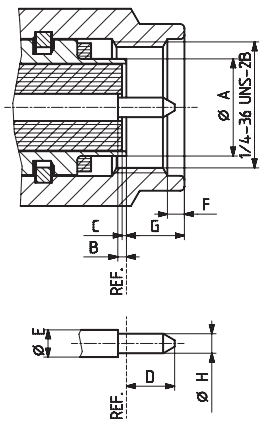

Jack (female)

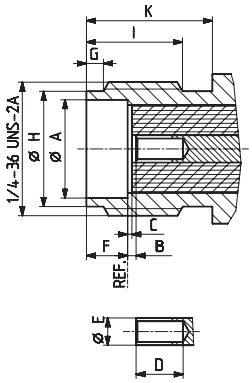

	Plug		Jack	
	min.	max.	min.	max.
A	-	4.59/1.81	4.59/0.181	-
B	0.00/0.000	0.25/0.010	0.00/0.000	0.25/0.010
C	0.00/0.000	0.25/0.010	0.00/0.000	0.25/0.010
D	-	2.54/0.100	2.67/0.105	-
E	1.24/0.049	1.29/0.051	1.24/0.049	1.29/0.051
F	0.38/0.015	1.14/0.045	1.88/0.074	1.98/0.078
G	-	3.43/0.135	0.38/0.015	1.14/0.045
H	0.90/0.036	0.94/0.037	5.28/0.208	5.49/0.216
I	-	-	4.32/0.170	-
K	-	-	5.54/0.218	-

Features

- Frequency range up to 18 GHz, extended frequency version up to 26.5 GHz
- Excellent return loss
- Intermateable with PC3.5 and SK
- The SMA (subminiature A) interface dimensions conform to the following standards:
  International: IEC 60169-15
  Europe: CECC 22110
  USA: MIL-PRF-39012 SMA
  Interface MIL-STD-348/310

Series SMA – technical data

Electrical data	MIL-C-39012					
Impedance		50 Ω				
Frequency range for interface		DC to 18 GHz (extended range DC to 26.5 GHz)				
RL (typical value)		for cable connectors refer to table below				
Cable type		semi-rigid		flexible		
Cable dielectric diameter (mm/in)		1.5/0.066	3/0.117	1.5/0.066	3/0.117	
RF leakage measured at 3 GHz	3.26	≥ 100 dB-f (GHz)		≥ 60 dB		
Dielectric withstanding voltage (at sea level, in V rms, 50 Hz)	3.17	1000	1500	750	1000	
Working voltage (at sea level, in V rms, 50 Hz)		335	500	250	335	
Corona extinction voltage (at 21 000 m/70 000 ft, in V rms, 50 Hz)	3.22	250	375	190	250	
Working voltage (at 21 000 m/70 000 ft, in V rms, 50 Hz)		85	125	65	85	
RF withstanding voltage at 5 MHz (V rms)	3.23	670	1000	500	670	
Insulation resistance	3.11	≥ 5 · 10^3 MΩ				
Contact resistance • Centre contact • Outer contact	3.16	 ≤ 3 mΩ ≤ 2.5 mΩ				

Typical RL for HUBER+SUHNER standard SMA cable connectors

Typical RL (dB)	Frequency range					Cable group
Connector type	1 GHz	2.5 GHz	5 GHz	12.4 GHz	18 GHz	
Straight connectors	37	37	37	29	28	Y3, Y11
	37	37	34	29	23	Y5, Y12
	32	29	28			U2, U4
	34	32	29			U7, U9
Right angle connectors	37	32	26	19		Y3, Y11
	37	32	28	22		Y5, Y12
	32	29	26			U2, U4
	37	32	29			U7, U9

Performance values are typical for the connector interface. Individual component or connector performance may vary depending on the connector design, attachment (e.g. cable, PCB) or application. For detailed specifications please refer to the specific data sheets on our website www.hubersuhner.com.

L'IMPULSION
Retrouvez nous sur
www.limpulsion.fr

Series SMA – technical data

Typical RL for HUBER+SUHNER ECO SMA cable connectors

Typical RL (dB)	Frequency range				Cable group
Connector type	1 GHz	2.5 GHz	5 GHz	6 GHz	
Straight connectors	36	36	35	30	Y3, Y11
	36	36	35	30	Y5, Y12
	32	29	26	25	U2, U4
	34	32	27	25	U7, U9
Right angle connectors	36	32	26	25	Y3, Y11
	36	32	28	24	Y5, Y12
	32	29	26	25	U2, U4
	36	32	26	25	U7, U9

Mechanical data	MIL-C-39012		
Recommended coupling nut torque		HUBER+SUHNER standard SMA	0.8 to 1.1 Nm (7.1 to 9.7 in lbs)
		HUBER+SUHNER ECO SMA	0.45 Nm (4.0 in lbs)
Coupling nut retention force	3.25		≥ 270 N/60.7 lbs
Contact captivation • Axial	3.12	HUBER+SUHNER standard SMA	≥ 27 N/6.1 lbs
		HUBER+SUHNER ECO SMA	≥ 20 N/5.4 lbs
Cable retention force [1]		see suitable cables, pages 32 – 41	
Durability (matings)			≤ 500

Environmental data	Test conditions
Temperature range	–65 to +165°C/–85 to +329 °F
Climatic category	IEC → 55/155/21
Thermal shock	MIL-STD-202, method 107, condition B
Moisture resistance	MIL-STD-202, method 106
Corrosion	saltspray test acc. to MIL-STD-202, method 101, condition B
Vibration	MIL-STD-202, method 204, condition D
Shock	MIL-STD-202, method 213, condition I
RoHS 6 compliant	Except the hermetic sealed SMA connectors all other connector types satisfy RoHS compability.

Performance values are typical for the connector interface. Individual component or connector performance may vary depending on the connector design, attachment (e.g. cable, PCB) or application. For detailed specifications please refer to the specific data sheets on our website www.hubersuhner.com.

[1] Value considers maximum load of the cables without irreversible variations of specifications.

L'IMPULSION
Retrouvez nous sur
www.limpulsion.fr

Series SMA – technical data

Material data			
Connector part		**Material**	**Plating**
Bodies, outer contacts, nut	HUBER+SUHNER standard SMA	copper-beryllium alloy stainless steel, spring bronze	gold, passivated
	HUBER+SUHNER ECO SMA	brass, spring bronze	SUCOPLATE®/ SUCOPRO® gold plating
Pin contacts		copper-beryllium alloy, brass	gold/SUCOPRO® gold plating
Socket contacts		copper-beryllium alloy/spring bronze	gold
Crimp ferrules		copper, brass	gold
Insulators		PTFE or PFA	
Gaskets		silicone rubber	

Performance values are typical for the connector interface. Individual component or connector performance may vary depending on the connector design, attachment (e.g. cable, PCB) or application. For detailed specifications please refer to the specific data sheets on our website www.hubersuhner.com.

L'IMPULSION | Retrouvez nous sur www.limpulsion.fr

Series SMA – cable connectors

Straight cable plugs (male)

For semi-rigid cables

- With pin and insulator
- Cable entry soldered
- Centre contact soldered

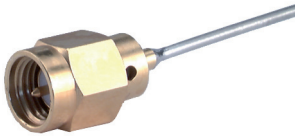

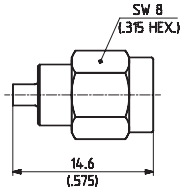

Fig. 1

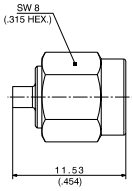

Fig. 2

HUBER+SUHNER type	Item no.	Cable group (example)	Packaging	Assembly instruction	Plating body	Fig.	Notes
11_SMA-50-1-1/111_NE [1] [2]	22642387	Y19 (EZ_34)	single	9118	gold	1	
11_SMA-50-1-2/111_NE [1] [2]	22642388	Y2, Y15 (SUCOFORM_47, EZ_47)	single	9119		1	
11_SMA-50-1-53/119_NH	23013327	Y2, Y15 (SUCOFORM_47, EZ_47)	bulk 100 pcs.	150006		2	nut passivated stainless steel

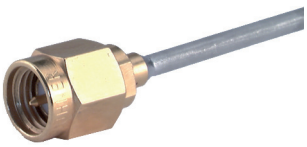

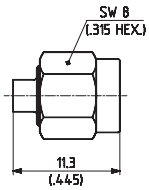

Fig. 1

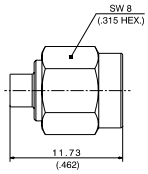

Fig. 2

HUBER+SUHNER type	Item no.	Cable group (example)	Packaging	Assembly instruction	Plating body	Fig.	Notes
11_SMA-50-2-15/111_NE [5] 11_SMA-50-2-15/111_NH	22544545 22645898	Y3, Y11, Y16 (SUCOFORM_86, EZ_86)	single bulk 100 pcs.	9056	gold	1	
11_SMA-50-2-65/119_NE [3], [5] 11_SMA-50-2-65/119_NH [3]	22642315 22645366	Y3, Y11, Y16 (SUCOFORM_86, EZ_86)	single bulk 100 pcs.	9056	gold	1	nut passivated stainless steel
11_SMA-50-2-110/133_NE [4] 11_SMA-50-2-110/133_NP [4]	84130715 84117816	Y3, Y11, Y16 (SUCOFORM_86, EZ_86)	single bulk 500 pcs.	0000349249	SUCO-PLATE®	2	

All highlighted types are HUBER+SUHNER ECO types.

[1] Compound 74_Z-0-0-116 needed
[2] SUCOPRO® (economical) version on request
[3] Cable entry CuBe/gold
[4] Use torque wrench 74_Z-0-0-79
[5] SUCOPRO® (economical) version on request

Cable groups see page 32 | Assembly tools see page 531 | Mounting holes/PCB layouts see page 561

L'IMPULSION
Retrouvez nous sur
www.limpulsion.fr

Series SMA – cable connectors

Straight cable plugs (male)

For semi-rigid cables

- With pin and insulator
- Cable entry soldered
- Centre contact soldered

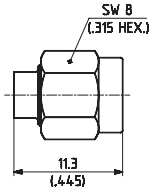

Fig. 1

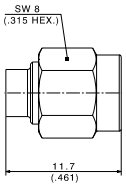

Fig. 2

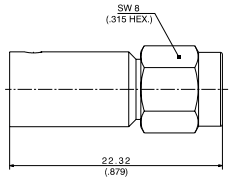

Fig. 3



HUBER+SUHNER type	Item no.	Cable group (example)	Packaging	Assembly instruction	Plating body	Fig.	Notes
11_SMA-50-3-15/111_NE [2] 11_SMA-50-3-15/111_NH	22544547 22651601	Y5, Y12, Y17 (SUCOFORM_141, EZ_141)	single bulk 100 pcs.	9056	gold	1	
11_SMA-50-3-65/119_NE 11_SMA-50-3-65/119_NH	22641643 22646570	Y5, Y12, Y17 (SUCOFORM_141, EZ_141)	single bulk 100 pcs.	9056	gold	1	nut passivated stainless steel
11_SMA-50-3-235/133_NE [1] 11_SMA-50-3-235/133_NP [1]	84130698 84104274	Y5, Y12, Y17 (SUCOFORM_141, EZ_141)	single bulk 500 pcs.	0000333508	SUCO-PLATE®	2	
11_SMA-50-5-1/111_NE [2]	22642399	Y7, Y14 (SUCOFORM_250_01, EZ_250)	single	0000181414	gold	3	

All highlighted types are HUBER+SUHNER ECO types.

26.5 GHz – straight cable plugs (male)

For semi-rigid cables

- With pin and insulator
- Centre contact soldered

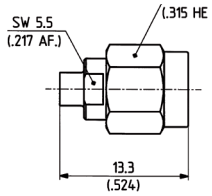

Fig. 1

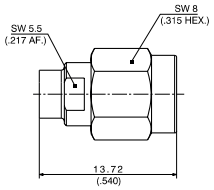

Fig. 2

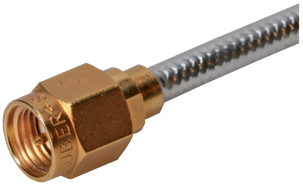

HUBER+SUHNER type	Item no.	Cable group (example)	Packaging	Assembly instruction	Fig.	Plating body
11_SMA-50-2-100/111_NE [2]	22648717	Y3, Y11, (SUCOFORM_86, EZ_86)	single	0000181590	1	gold
11_SMA-50-3-100/111_NE [2] 11_SMA-50-3-100/111_NH	22648718 22658936	Y5, Y12, Y17 (SUCOFORM_141, EZ_141)	single bulk 100 pcs.		2	

[1] Use torque wrench 74_Z-0-0-79
[2] SUCOPRO® (economical) version on request

Cable groups see page 32 | Assembly tools see page 531 | Mounting holes/PCB layouts see page 561

L'IMPULSION | Retrouvez nous sur www.limpulsion.fr

Series SMA – cable connectors

26.5 GHz – straight cable plugs (male)

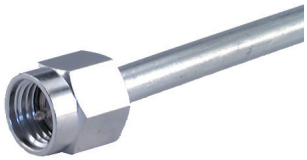

For semi-rigid cables

- Without pin and insulator

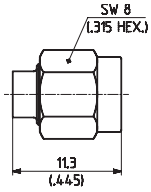

Fig. 1

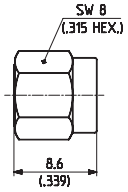

Fig. 2

HUBER+SUHNER type	Item no.	Cable group (example)	Packaging	Assembly instruction	Plating body	Fig.	Notes
11_SMA-50-3-14/-11_NH	22644467	Y5 (EZ_141)	bulk 100 pcs.	9055	gold	1	
11_SMA-50-3-16/-11_NH	22644470		bulk 100 pcs.		gold	2	
11_SMA-50-3-42/-33_NE 11_SMA-50-3-42/-33_NH	22649222 22646128		single bulk 100 pcs.		SUCOPLATE®	2	
11_SMA-50-3-64/-19_NH	22649224		bulk 100 pcs.		gold	1	nut passivated stainless steel
11_SMA-50-3-66/-19_NE 11_SMA-50-3-66/-19_NH	22641644 22645207		single bulk 100 pcs.		gold	2	nut passivated stainless steel

Straight cable plugs (male)

For flexible cables

- Cable entry clamp
- Centre contact soldered

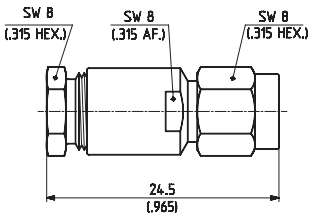

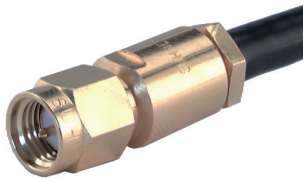

HUBER+SUHNER type	Item no.	Cable group (example)	Packaging	Assembly instruction	Plating body
11_SMA-50-3-7/111_NE [1]	22640050	U7 (RG_58_C/U, ENVIROFLEX_B58)	single	3071	gold
11_SMA-50-3-8/111_NH [1]	22648630	U9 (RG_142_B/U, ENVIROFLEX_142)	bulk 100 pcs.		
11_SMA-50-3-10/111_NE [1]	22640053	U11 (RG_400_/U, ENVIROFLEX_400)	single		

[1] SUCOPRO® (economical) version on request

Cable groups see page 32 | Assembly tools see page 531 | Mounting holes/PCB layouts see page 561

L'IMPULSION
Retrouvez nous sur
www.limpulsion.fr

Series SMA – cable connectors

Straight cable plugs (male)

For flexible cables

- Cable entry crimp
- Centre contact soldered

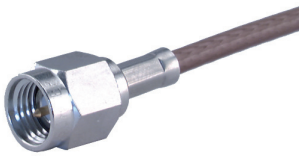

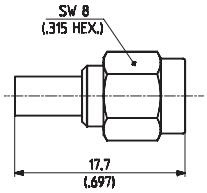

Fig. 1

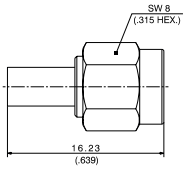

Fig. 2

HUBER+SUHNER type	Item no.	Cable group (example)	Packaging	Assembly instruction	Plating body	Crimp insert	Fig.
11_SMA-50-1-4/111_NE [3]	22645871	U1 (RG_178_B/U, ENVIROFLEX_178)	single	27061	gold	A	1
11_SMA-50-2-5/111_NE [3] 11_SMA-50-2-5/111_NH	22640042 22646312	U2 (RG_316_/U, ENVIROFLEX_316)	single bulk 100 pcs.	27266	gold	A	1
11_SMA-50-2-6/111_NE [3] 11_SMA-50-2-6/111_NH	22640043 22650740	U4 (K_02252_D ENVIROFLEX_316_D)	single bulk 100 pcs.	27266	gold	A	1
11_SMA-50-2-27/111_NE [1), 3] 11_SMA-50-2-27/111_NH [1]	84022967 22652923	U2 (RG_316_/U, ENVIROFLEX_316)	single bulk 100 pcs.	27164	gold	1 A	1
11_SMA-50-2-55/199_NE	22641377	U2 (RG_316_/U, ENVIROFLEX_316)	single	3069	passivated stainless steel	A	1
11_SMA-50-2-56/199_NE 11_SMA-50-2-56/199_NH	22641376 22651486	U4 (K_02252_D, ENVIROFLEX_316_D)	single bulk 100 pcs.	3069	passivated stainless steel	A	1
11_SMA-50-2-111/133_NE [2] 11_SMA-50-2-111/133_NP [2]	84130699 84117820	U2 (RG_316_/U, ENVIROFLEX_316_D)	single bulk 500 pcs.	0000348839	SUCOPLATE®	A	2
11_SMA-50-2-112/133_NE [2] 11_SMA-50-2-112/133_NP [2]	84130700 84115820	U4 (K_02252_D, ENVIROFLEX_316_D)	single bulk 500 pcs.	0000347891	SUCOPLATE®	A	2

All highlighted types are HUBER+SUHNER ECO types.

[1] HUBER+SUHNER full crimp
[2] use torque wrench 74_Z-0-0.79
[3] SUCOPRO® (economical) version on request

Cable groups see page 32 | Assembly tools see page 531 | Mounting holes/PCB layouts see page 561

L'IMPULSION | Retrouvez nous sur www.limpulsion.fr

Series SMA – cable connectors

Straight cable plugs (male)

For flexible cables

- Cable entry crimp
- Centre contact soldered (11_SMA-50-4-77 plugged center conductor)



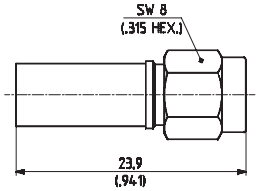

Fig. 1

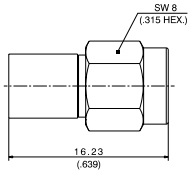

Fig. 2

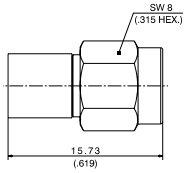

Fig. 3

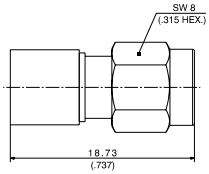

Fig. 4

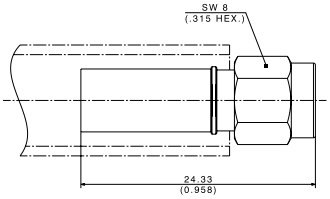

Fig. 5

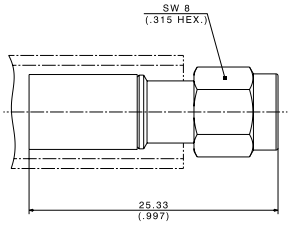

Fig. 6

HUBER+SUHNER type	Item no.	Cable group (example)	Packaging	Assembly instruction	Plating body	Crimp insert	Fig.
11_SMA-50-3-5/111_NE [2] 11_SMA-50-3-5/111_NH	22640048 22644684	U7 (RG_58_C/U, ENVIROFLEX_B58)	single bulk 100 pcs.	3069	gold	B	1
11_SMA-50-3-6/111_NE [2] 11_SMA-50-3-6/111_NH	22640049 22650739	U9, U11 (RG_400_/U, ENVIROFLEX_400)	single bulk 100 pcs.	3069	gold	B	1
11_SMA-50-3-55/199_NE	22641371	U7 (RG_58_C/U, ENVIROFLEX_B58)	single	3069	passivated stainless steel	B	1
11_SMA-50-3-56/199_NE 11_SMA-50-3-56/199_NH	22543647 22648300	U9, U11 (RG_400_/U, ENVIROFLEX_400)	single bulk 100 pcs.	3069	passivated stainless steel	B	1
11_SMA-50-3-236/133_NE [1] 11_SMA-50-3-236/133_NP [1]	84130702 84117821	U9, U11, U41 (RG_400_/U, ENVIROFLEX_400)	single bulk 500 pcs.	0000349507	SUCOPLATE®	1 [3]	2
11_SMA-50-3-237/133_NE [1] 11_SMA-50-3-237/133_NP [1]	84130703 84117823	U7 (RG_58_C/U, ENVIROFLEX_B58)	single bulk 500 pcs.	0000349571	SUCOPLATE®	B	3
11_SMA-50-3-239/133_NF	85010668	X27 (SPUMA_195, SPUMA_195-FR-01)	single	0000417562	SUCOPLATE®	B	5
11_SMA-50-4-50/133_NE [1] 11_SMA-50-4-50/133_NP [1]	84130705 84112519	S16, X9 (SX_04172_B-60)	single bulk 500 pcs.	0000347768	SUCOPLATE®	2 [4]	4
11_SMA-50-4-77/133_NE	85010193	X28 (SPUMA_240, SPUMA_240-FR-01)	single	0000416855	SUCOPLATE®	C	6

All highlighted types are HUBER+SUHNER ECO types.

[1] Use torque wrench 74_Z-0-0-79
[2] SUCOPRO® (economical) version on request
[3] Crimp tool 76_Z-0-0-57
[4] Crimp tool 76_Z-0-4-23

Cable groups see page 32 | Assembly tools see page 531 | Mounting holes/PCB layouts see page 561

L'IMPULSION
Retrouvez nous sur
www.limpulsion.fr

Series SMA – cable connectors

Right angle cable plugs (male)

For semi-rigid cables

- With pin and insulator
- Cable entry soldered
- Centre contact soldered



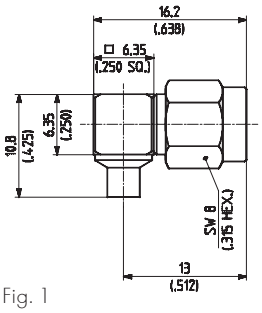

Fig. 1

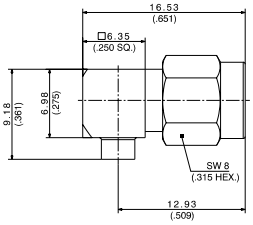

Fig. 2

HUBER+SUHNER type	Item no.	Cable group (example)	Packaging	Assembly instruction	Plating body	Fig.	Notes
16_SMA-50-2-53/119_NE 16_SMA-50-2-53/119_NH	22644242 22646639	Y3, Y11, Y16 (SUCOFORM_86, EZ_86)	single bulk 100 pcs.	3068	gold	1	nut passivated stainless steel
16_SMA-50-2-103/111_NE [2] 16_SMA-50-2-103/111_NH	84018309 22652924	Y3, Y11, Y16 (SUCOFORM_86, EZ_86)	single bulk 100 pcs.	3068	gold	1	
16_SMA-50-2-110/133_NE [1] 16_SMA-50-2-110/133_NP [1]	84130706 84117807	Y3, Y11, Y16 (SUCOFORM_86, EZ_86)	single bulk 500 pcs.	0000335631	SUCO-PLATE®	2	

All highlighted types are HUBER+SUHNER ECO types.

- With pin and insulator
- Cable entry soldered
- Centre contact soldered



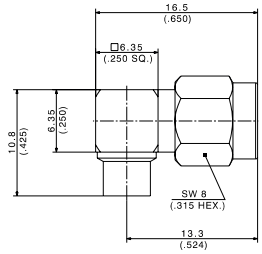

Fig. 1

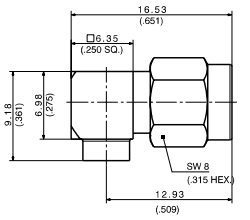

Fig. 2

HUBER+SUHNER type	Item no.	Cable group (example)	Packaging	Assembly instruction	Plating body	Fig.	Notes
16_SMA-50-3-3/111_NE [2] 16_SMA-50-3-3/111_NH	22640073 22646569	Y5, Y12, Y17 (SUCOFORM_141, EZ_141)	single bulk 100 pcs.	3068	gold	1	
16_SMA-50-3-13/133_NE [1] 16_SMA-50-3-13/133_NP [1]	84130707 84117810	Y5, Y12, Y17 (SUCOFORM_141, EZ_141)	single bulk 500 pcs.	0000335642	SUCO-PLATE®	2	
16_SMA-50-3-53/119_NE 16_SMA-50-3-53/119_NH	22644243 22646561	Y5, Y12, Y17 (SUCOFORM_141, EZ_141)	single bulk 100 pcs.	3068	gold	1	nut passivated stainless steel

All highlighted types are HUBER+SUHNER ECO types.

[1] Use torque wrench 74_Z-0-0-79
[2] SUCOPRO® (economical) version on request

Cable groups see page 32 | Assembly tools see page 531 | Mounting holes/PCB layouts see page 561

L'IMPULSION | Retrouvez nous sur www.limpulsion.fr

Series SMA – cable connectors

26.5 GHz – right angle cable plugs (male)

For semi-rigid cables

- With pin and insulator
- Cable entry soldered
- Centre contact plugged

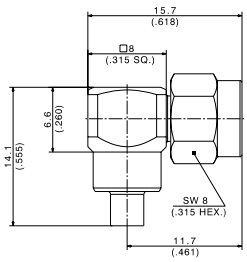

Fig. 1

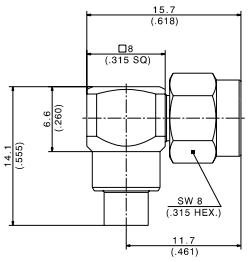

Fig. 2

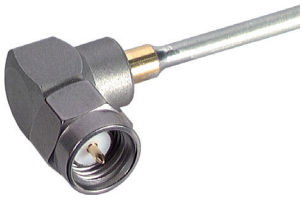

HUBER+SUHNER type	Item no.	Cable group (example)	Packaging	Assembly instruction	Plating body	Fig.
16_SMA-50-2-100/199_NH	23018813	Y3, Y11, Y16 (SUCOFORM_86, EZ_86)	bulk 100 pcs.	27055	passivated stainless steel	1
16_SMA-50-3-100/199_NE	22648293	Y5, Y12, Y17 (SUCOFORM_141, EZ_141)	single			2

Cable groups see page 32 | Assembly tools see page 531 | Mounting holes/PCB layouts see page 561

Series SMA – cable connectors

Right angle cable plugs (male)

For flexible cables

- Cable entry crimp
- Centre contact soldered



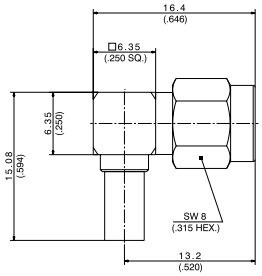

Fig. 1

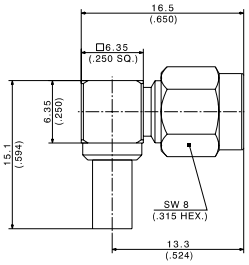

Fig. 2

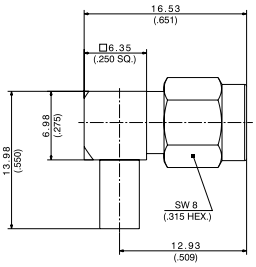

Fig. 3

HUBER+SUHNER type	Item no.	Cable group (example)	Packaging	Assembly instruction	Plating body	Crimp insert	Fig.
16_SMA-50-1-1/111_NE [2] 16_SMA-50-1-1/111_NH	22641805 22660358	U1 (RG_178_B/U, ENVIROFLEX_178)	single bulk 100 pcs.	3070	gold	A	1
16_SMA-50-2-55/199_NE 16_SMA-50-2-55/199_NH	22642661 84028953	U2 (RG_316_/U, ENVIROFLEX_316)	single bulk 100 pcs.	3070	passivated stainless steel		2
16_SMA-50-2-56/199_NE 16_SMA-50-2-56/199_NH	22642662 22658888	U4 (K_02252_D, ENVIROFLEX_316_D)	single bulk 100 pcs.	3070	passivated stainless steel		2
16_SMA-50-2-105/111_NE [2] 16_SMA-50-2-105/111_NH	22651455 22651456	U2 (RG_316_/U, ENVIROFLEX_316)	single bulk 100 pcs.	3070	gold		1
16_SMA-50-2-106/111_NE [2] 16_SMA-50-2-106/111_NH	22651457 22651458	U4 (K_02252_D, ENVIROFLEX_316_D)	single bulk 100 pcs.	3070	gold		1
16_SMA-50-2-111/133_NE [1] 16_SMA-50-2-111/133_NP [1]	84130708 84117808	U2 (RG_316_/U, ENVIROFLEX_316)	single bulk 500 pcs.	0000335656	SUCOPLATE®		3
16_SMA-50-2-112/133_NE [1] 16_SMA-50-2-112/133_NP [1]	84130709 84117809	U4 (K_02252_D, ENVIROFLEX_316_D)	single bulk 500 pcs.	0000335656	SUCOPLATE®		3

All highlighted types are HUBER+SUHNER ECO types.

[1] Use torque wrench 74_Z-0-0-79
[2] SUCOPRO® (economical) version on request

Cable groups see page 32 | Assembly tools see page 531 | Mounting holes/PCB layouts see page 561

L'IMPULSION
Retrouvez nous sur
www.limpulsion.fr

Series SMA – cable connectors

Right angle cable plugs (male)

For flexible cables

- Cable entry crimp
- Centre contact soldered



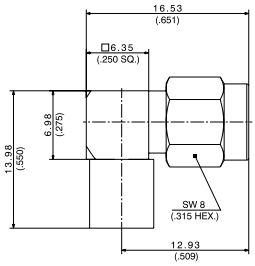

Fig. 1

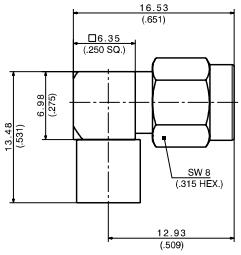

Fig. 2

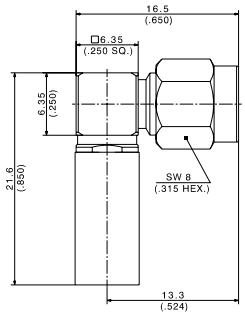

Fig. 3

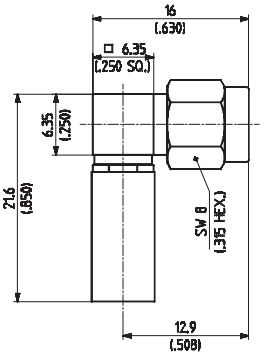

Fig. 4

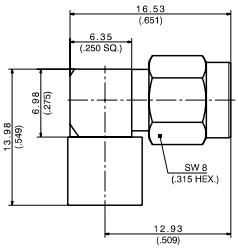

Fig. 5

HUBER+SUHNER type	Item no.	Cable group (example)	Packaging	Assembly instruction	Plating body	Crimp insert	Fig.
16_SMA-50-3-14/133_NE [1] 16_SMA-50-3-14/133_NP [1]	84130711 84117811	U9, U11, U41 (RG_400_/U, ENVIROFLEX_400)	single bulk 500 pcs.	0000335678	SUCOPLATE®	B	1
16_SMA-50-3-15/133_NE [1] 16_SMA-50-3-15/133_NP [1]	84130712 84117812	U7 (RG_58 _C/U, ENVIROFLEX_B58)	single bulk 500 pcs.	0000335679	SUCOPLATE®	B	2
16_SMA-50-3-56/199_NE	22642660	U9, U11 (RG_400_/U, ENVIROFLEX_400)	single	3070	passivated stainless steel	B	3
16_SMA-50-3-105/111_NE [2] 16_SMA-50-3-105/111_NH	22651585 22651800	U7 (RG_58 _C/U, ENVIROFLEX_B58)	single bulk 100 pcs.	3070	gold	B	4
16_SMA-50-3-106/111_NE [2] 16_SMA-50-3-106/111_NH	22650546 22650545	U9, U11 (RG_400_/U, ENVIROFLEX_400)	single bulk 100 pcs.	3070	gold	B	4
16_SMA-50-4-50/133_NE [1] 16_SMA-50-4-50/133_NP [1]	84130714 84117813	S16, X9 (SX_04172_B-60)	single bulk 500 pcs.	0000335684	SUCOPLATE®	C	5

All highlighted types are HUBER+SUHNER ECO types.

[1] Use torque wrench 74_Z-0-0-79
[2] SUCOPRO® (economical) version on request

Cable groups see page 32 | Assembly tools see page 531 | Mounting holes/PCB layouts see page 561

L'IMPULSION
Retrouvez nous sur
www.limpulsion.fr

Series SMA – cable connectors

Straight cable jacks (female)

For semi-rigid cables
- Cable entry soldered
- Centre contact soldered

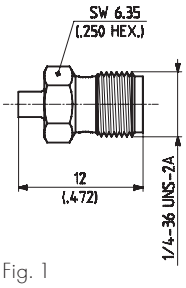

Fig. 1

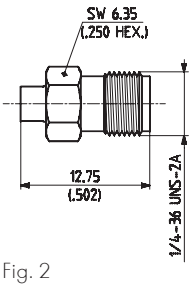

Fig. 2

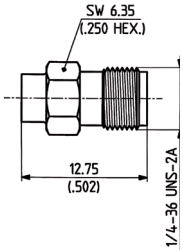

Fig. 3



HUBER+SUHNER type	Item no.	Cable group (example)	Packaging	Assembly instruction	Plating body	Fig.
21_SMA-50-1-1/111_NE [1]	22642385	Y19 (EZ_34)	single	9118	gold	1
21_SMA-50-1-2/111_NE	22642386	Y2, Y15 SUCOFORM_47, EZ_47)	single	9119		1
21_SMA-50-2-15/111_NE [1] 21_SMA-50-2-15/111_NH	22544549 22652141	Y3, Y11, Y16 (SUCOFORM_86, EZ_86)	single bulk 100 pcs.	9057		2
21_SMA-50-3-15/111_NE [1] 21_SMA-50-3-15/111_NH	22544550 22645042	Y5, Y12, Y17 (SUCOFORM_141, EZ_141)	single bulk 100 pcs.	9057		3

[1] SUCOPRO® (economical) version on request

Cable groups see page 32 | Assembly tools see page 531 | Mounting holes/PCB layouts see page 561

L'IMPULSION | Retrouvez nous sur www.limpulsion.fr

Series SMA – cable connectors

Straight cable jacks (female)

For flexible cables

- Cable entry crimp
- Centre contact soldered

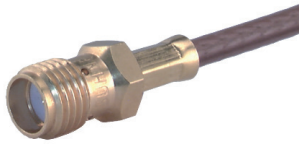

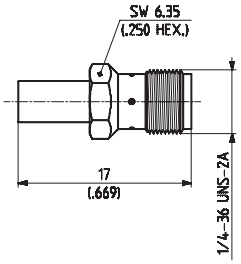

HUBER+SUHNER type	Item no.	Cable group (example)	Packaging	Assembly instruction	Plating body	Crimp insert
21_SMA-50-2-5/111_NE [1]	22640077	U2 (RG_316_/U, ENVIROFLEX_316)	single	3069	gold	A
21_SMA-50-2-6/111_NE [1] 21_SMA-50-2-6/111_NH	22640078 22651818	U4 (K_02252_D, ENVIROFLEX_316_D)	single bulk 100 pcs.			

- Cable entry crimp
- Centre contact soldered

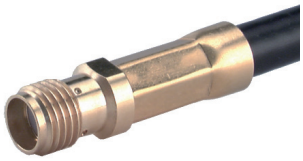

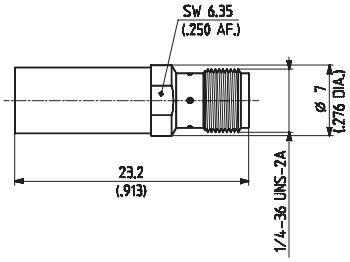

HUBER+SUHNER type	Item no.	Cable group (example)	Packaging	Assembly instruction	Plating body	Crimp insert
21_SMA-50-3-5/111_NE [1]	22640081	U7 (RG_58_C/U, ENVIROFLEX_B58)	single	3069	gold	B
21_SMA-50-3-6/111_NE [1]	22640082	U9, U11, U39 (RG_400_/U, ENVIROFLEX_400)				

[1] SUCOPRO® (economical) version on request

Cable groups see page 32 | Assembly tools see page 531 | Mounting holes/PCB layouts see page 561

L'IMPULSION Retrouvez nous sur www.limpulsion.fr

Series SMA – cable connectors

Straight bulkhead cable jacks (female)

For semi-rigid cables

- Cable entry soldered
- Centre contact soldered
- With panel seal

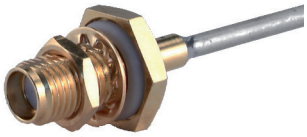

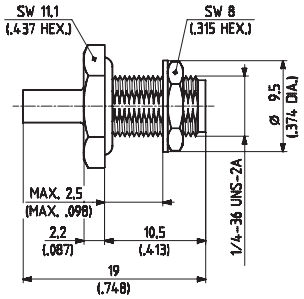

Fig. 1

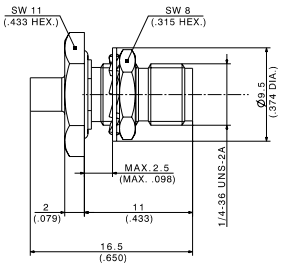

Fig. 2

HUBER+SUHNER type	Item no.	Cable group (example)	Packaging	Assembly instruction	Plating body	Mounting hole	Fig.
24_SMA-50-2-15/111_NE [1] 24_SMA-50-2-15/111_NH	22544532 22645490	Y3, Y11, Y16 (SUCOFORM_86)	single bulk 100 pcs.	9057	gold	ML 35	1
24_SMA-50-2-41/133_NE 24_SMA-50-2-41/133_NH	22641381 22645368	Y3, Y11, Y16 (SUCOFORM_86)	single bulk 100 pcs.	0000185051	SUCOPLATE®	ML 20	2

All highlighted types are HUBER+SUHNER ECO types.

- Cable entry soldered
- Centre contact soldered
- With panel seal

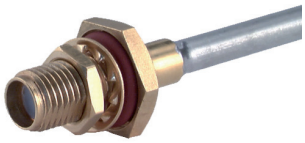

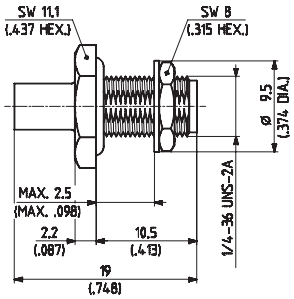

Fig. 1

HUBER+SUHNER type	Item no.	Cable group (example)	Packaging	Assembly instruction	Plating body	Mounting hole	Fig.
24_SMA-50-3-15/111_NE [1] 24_SMA-50-3-15/111_NH	22641153 22645259	Y5, Y12, Y17 (SUCOFORM_141, EZ_141)	single bulk 100 pcs.	9057	gold	ML 35	1

[1] SUCOPRO® (economical) version on request

Cable groups see page 32 | Assembly tools see page 531 | Mounting holes/PCB layouts see page 561

L'IMPULSION
Retrouvez nous sur
www.limpulsion.fr

Series SMA – cable connectors

26.5 GHz – straight bulkhead cable jacks (female)

For semi-rigid cables
- Cable entry soldered
- Centre contact soldered

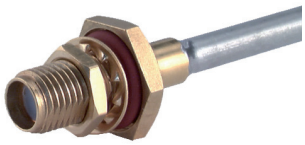

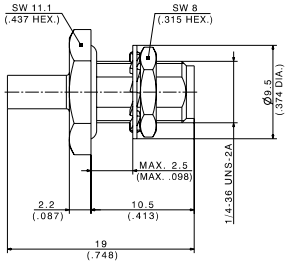

Fig. 1

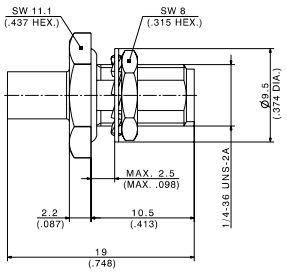

Fig. 2

HUBER+SUHNER type	Item no.	Cable group (example)	Packaging	Assembly instruction	Plating body	Mounting hole	Fig.
24_SMA-50-2-100/111_NE [1]	22648727	Y3, Y11, Y16 SUCOFORM_86, EZ_86)	single	27055	gold	ML 35	1
24_SMA-50-3-100/111_NE [1]	22648728	Y5, Y12, Y17 (SUCOFORM_141, EZ_141)	single				2

[1] SUCOPRO® (economical) version on request

Cable groups see page 32 | Assembly tools see page 531 | Mounting holes/PCB layouts see page 561

L'IMPULSION
Retrouvez nous sur
www.limpulsion.fr

Series SMA – cable connectors

Straight bulkhead cable jacks (female)

For flexible cables
- Cable entry crimp
- Centre contact soldered



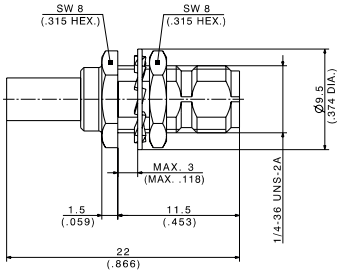

Fig. 1

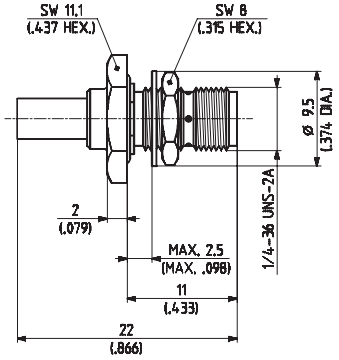

Fig. 2

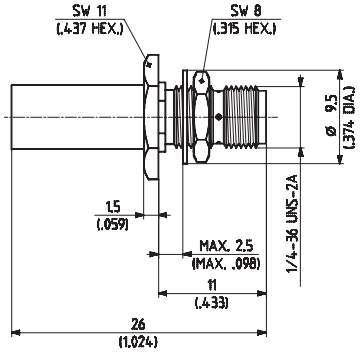

Fig. 4

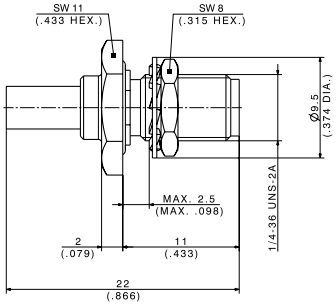

Fig. 5

HUBER+SUHNER type	Item no.	Cable group (example)	Packaging	Assembly instruction	Plating body	Crimp insert	Mounting hole	Fig.
24_SMA-50-1-3/111_NE [1]	22649873	U1 (RG_178, ENVIROFLEX_178)	single	27104	gold	A	ML 35	1
24_SMA-50-2-13/111_NE [1] 24_SMA-50-2-13/111_NH	22651767 22651719	U4 (K_02252_D, ENVIROFLEX_316_D)	single bulk 100 pcs.	3069	gold	A	ML 20	2
24_SMA-50-2-14/111_NE [1] 24_SMA-50-2-14/111_NH	22651748 22651747	U2 (RG_316_/U, ENVIROFLEX_316)	single bulk 100 pcs.	3069	gold	A	ML 20	2
24_SMA-50-2-37/133_NE	85013993	U4 (K_02252_D, ENVIROFLEX_316_D)	single	3069	SUCOPLATE®	A	ML 20	4
24_SMA-50-2-46/133_NE 24_SMA-50-2-46/133_NH	22644246 22646565	U2 (RG_316_/U, ENVIROFLEX_316)	single bulk 100 pcs.	3069	SUCOPLATE®	A	ML 20	2
24_SMA-50-3-42/133_NE	22641358	U9 (RG_142_B/U, ENVIROFLEX_142)	single	3072	SUCOPLATE®	B	ML 20	3

All highlighted types are HUBER+SUHNER ECO types.

[1] SUCOPRO® (economical) version on request

Cable groups see page 32 | Assembly tools see page 531 | Mounting holes/PCB layouts see page 561

L'IMPULSION
Retrouvez nous sur
www.limpulsion.fr

Series SMA – cable connectors

Straight panel cable jacks (female)

For semi-rigid cables
- Cable entry soldered
- Centre contact soldered

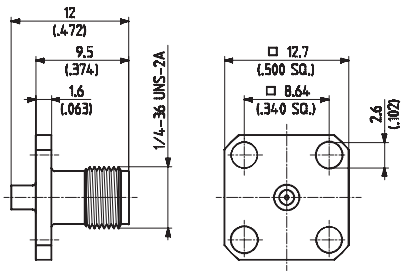

Fig. 1

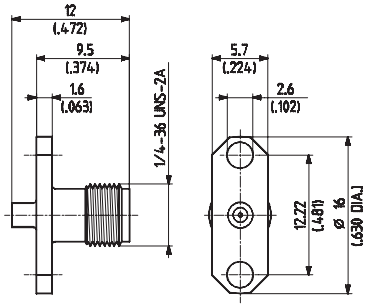

Fig. 2

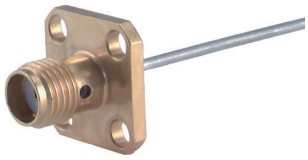

HUBER+SUHNER type	Item no.	Cable group (example)	Packaging	Assembly instruction	Plating body	Mounting hole	Fig.
25_SMA-50-1-2/111_NE [2]	22642390	Y2, Y15 (SUCOFORM_47, EZ_47)	single	9119	gold	ML 19	1
25_SMA-50-1-4/111_NE [2]	22642391	Y2, Y15 (SUCOFORM_47, EZ_47)	single bulk 100 pcs.	9119		-	2
25_SMA-50-2-15/111_NE [1] [2]	22544551	Y3, Y11, Y16 (SUCOFORM_86, EZ_86)	single	9057		ML 19	1
25_SMA-50-2-25/111_NE [1] [2]	22641493	Y3, Y11, Y16 (SUCOFORM_86, EZ_86)	single	9057		-	2

[1] Centre contact not captivated
[2] SUCOPRO® (economical) version on request

Cable groups see page 32 | Assembly tools see page 531 | Mounting holes/PCB layouts see page 561

L'IMPULSION
Retrouvez nous sur
www.limpulsion.fr

Series SMA – cable connectors

Straight panel cable jacks (female)

For semi-rigid cables

- Cable entry soldered
- Centre contact soldered

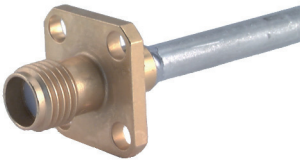

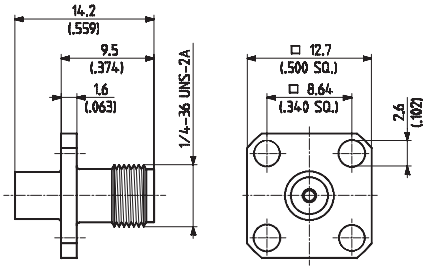

Fig. 1

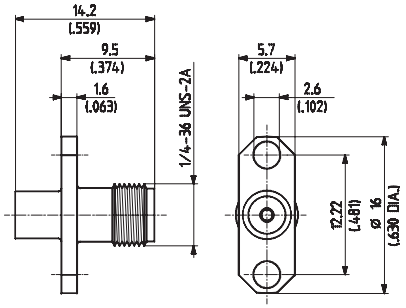

Fig. 2

HUBER+SUHNER type	Item no.	Cable group (example)	Packaging	Assembly instruction	Plating body	Mounting hole	Fig.
25_SMA-50-3-15/111_NE [1) 2)] 25_SMA-50-3-15/111_NH [1)]	22544552 22644717	Y5, Y12, Y17 (SUCOFORM_141, EZ_141)	single bulk 100 pcs.	9057	gold	ML 19	1
25_SMA-50-3-25/111_NE [1) 2)]	22641410	Y5, Y12, Y17 (SUCOFORM_141, EZ_141)	single			-	2

- Cable entry crimp
- Centre contact soldered

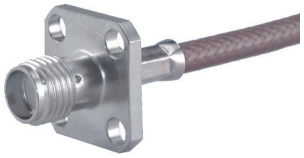

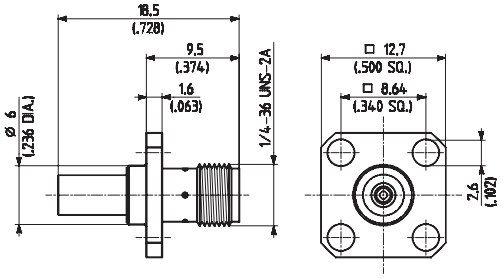

HUBER+SUHNER type	Item no.	Cable group (example)	Packaging	Assembly instruction	Plating body	Mounting hole	Crimp insert
25_SMA-50-2-5/111_NE [2)] 25_SMA-50-2-5/111_NH	22640112 22650755	U2 (RG_316_/U, ENVIROFLEX_316)	single bulk 100 pcs.	3072	gold	ML 19	A
25_SMA-50-2-6/111_NE [2)]	22640113	U4 (K_02252, ENVIROFLEX_316_D)	single				
25_SMA-50-2-46/133_NE	22642246	U4 (K_02252, ENVIROFLEX_316_D)	single	3072	SUCOPLATE®	ML 19	A

All highlighted types are HUBER+SUHNER ECO types.

[1)] Centre contact not captivated
[2)] SUCOPRO® (economical) version on request

Cable groups see page 32 | Assembly tools see page 531 | Mounting holes/PCB layouts see page 561

Series SMA – receptacles

Straight bulkhead receptacles

With solder end, jacks (female)

- With panel seal



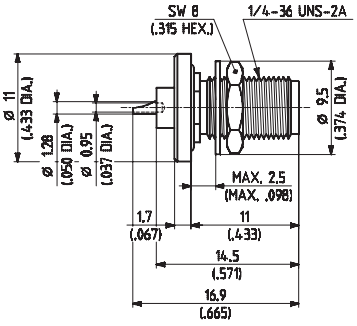

HUBER+SUHNER type	Item no.	Packaging	Plating body	Mounting hole	Mounting
22_SMA-50-0-1/111_NE	22640087	single	gold	ML 20	rear mounting

- Without panel seal



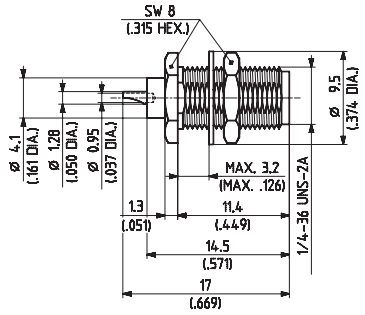

HUBER+SUHNER type	Item no.	Packaging	Plating body	Mounting hole	Mounting
22_SMA-50-0-4/111_NE 22_SMA-50-0-4/111_NH	22640962 22649418	single bulk 100 pcs.	gold	ML 35	rear mounting

Cable groups see page 32 | Assembly tools see page 531 | Mounting holes/PCB layouts see page 561

Series SMA – receptacles

Straight bulkhead receptacles

With coaxial end, jacks (female)

- Without panel seal



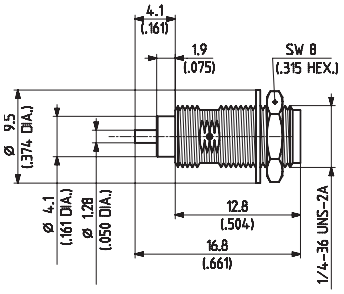

Fig. 1

HUBER+SUHNER type	Item no.	Packaging	Plating body	Mounting hole	Mounting	Fig.
22_SMA-50-0-3/111_NE	22640089	single	gold	ML 98	front mounting	1
22_SMA-50-0-53/199_NE	22543498	single	passivated stainless steel			

Hermetically sealed, plug (male)

- "Spark plug" with metal ring seal
- RoHs compliant alternative on request
- Front mounting



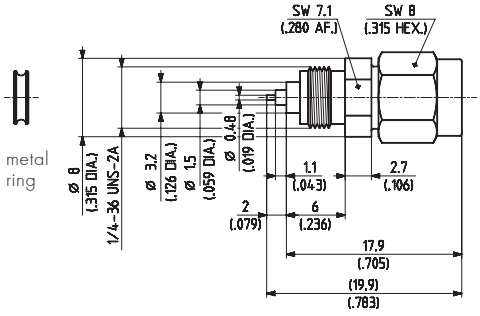

HUBER+SUHNER type	Item no.	Packaging	Plating body	Mounting hole	Notes
12_SMA-50-0-110/111_NE [1]	22652315	single	gold	ML 42	leak rate ≤ 10^{-8} Torr l/s (atm cc/s)

1) Use assembly tool 74_Z-0-0-75 and torque wrench 74_Z-0-0-80.

Cable groups see page 32 | Assembly tools see page 531 | Mounting holes/PCB layouts see page 561

Series SMA – receptacles

Straight bulkhead receptacles

Hermetically sealed, jacks (female)

- RoHs compliant alternative on request
- Front mounting



metal ring

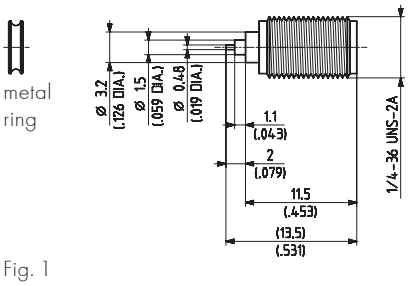

Fig. 1

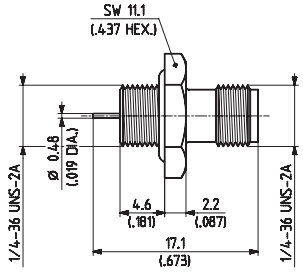

Fig. 2

insulating bushing

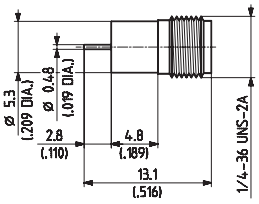

Fig. 3

HUBER+SUHNER type	Item no.	Packaging	Plating body	Mounting hole	Fig.	Notes
22_SMA-50-0-10/111_NE [1]	22641291	single	gold	ML 42	1	"Spark plug" with metal ring seal leak rate ≤ 10^{-8} Torr l/s (atm cc/s)
22_SMA-50-0-12/111_NE 22_SMA-50-0-12/111_NY	84042904 22641293	single tray 75 pcs.		ML 98	2	with panel seal leak rate ≤ 10^{-6} Torr l/s (atm cc/s)
22_SMA-50-0-15/111_NE	22544588	single		ML 96	3	panel sealing: laser beam welding [1] soldering temperature 250 °C/482 °F leak rate ≤ 10^{-8} Torr l/s (atm cc/s)

1) Use assembly tool 74_Z-0-0-75 and torque wrench 74_Z-0-0-80.

Cable groups see page 32 | Assembly tools see page 531 | Mounting holes/PCB layouts see page 561

Series SMA – receptacles

Straight panel receptacles

With solder end, jacks (female)

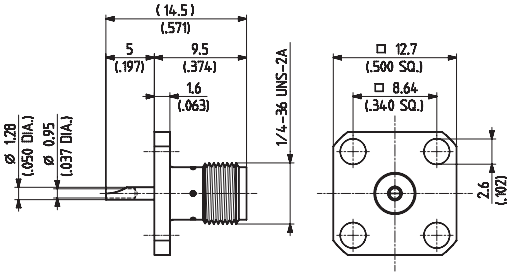

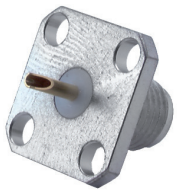

HUBER+SUHNER type	Item no.	Packaging	Plating body	Notes
23_SMA-50-0-1/111_NE 23_SMA-50-0-1/111_NH	22640090 22651409	single bulk 100 pcs.	gold	flush dielectric
23_SMA-50-0-51/199_NE	22543948	single	passivated stainless steel	

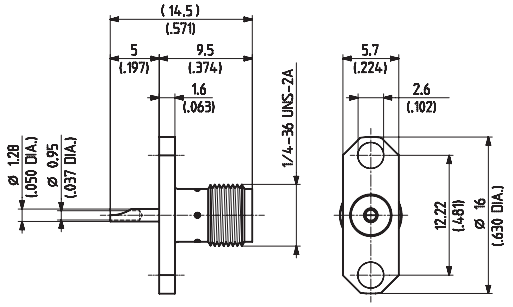



HUBER+SUHNER type	Item no.	Packaging	Plating body	Notes
23_SMA-50-0-11/111_NE	22640095	single	gold	flush dielectric
23_SMA-50-0-41/133_NE 23_SMA-50-0-41/133_NH	22543984 22644383	single bulk 100 pcs.	SUCOPLATE®	flush dielectric
23_SMA-50-0-61/199_NE	22544796	single	passivated stainless steel	flush dielectric

All highlighted types are HUBER+SUHNER ECO types.

With tab end, plug (male)

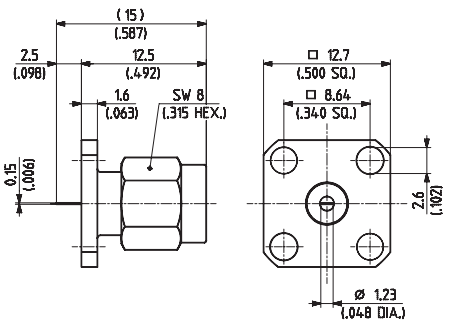

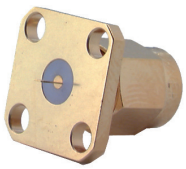

HUBER+SUHNER type	Item no.	Packaging	Plating body	Notes
13_SMA-50-0-2/111_NE	22640056	single	gold	flush dielectric

Cable groups see page 32 Assembly tools see page 531 Mounting holes/PCB layouts see page 561

L'IMPULSION | Retrouvez nous sur www.limpulsion.fr

Series SMA – receptacles

Straight panel receptacles

With tab end, jacks (female)

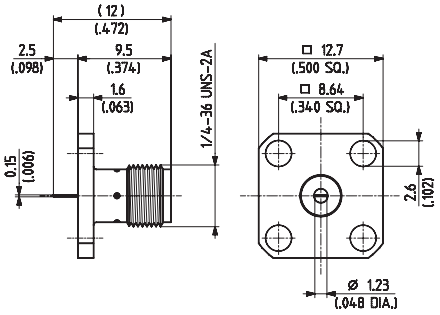



HUBER+SUHNER type	Item no.	Packaging	Plating body	Notes
23_SMA-50-0-2/111_NE	22640091	single	gold	flush dielectric
23_SMA-50-0-52/199_NE	22543487		passivated stainless steel	

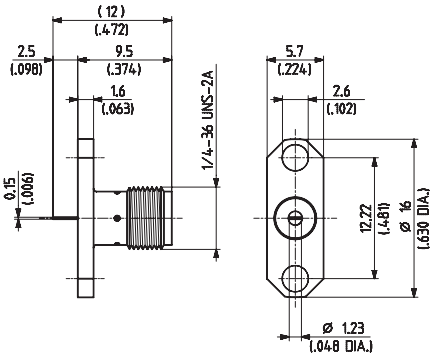



HUBER+SUHNER type	Item no.	Packaging	Plating body	Notes
23_SMA-50-0-12/111_NE	22640096	single	gold	flush dielectric
23_SMA-50-0-62/199_NE	22544779		passivated stainless steel	

Cable groups see page 32 | Assembly tools see page 531 | Mounting holes/PCB layouts see page 561

Series SMA – receptacles

Straight panel receptacles

With coaxial end, jacks (female)

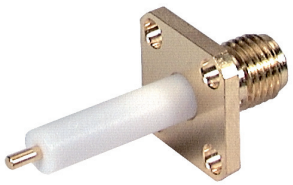

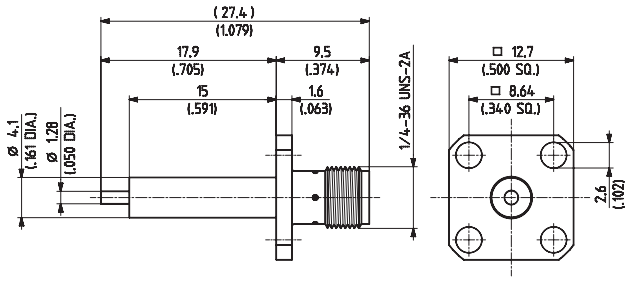

Fig. 1

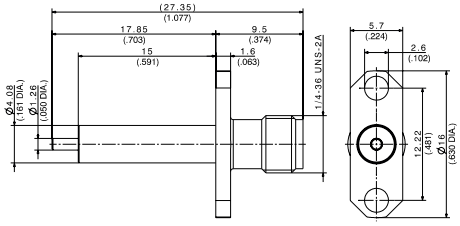

Fig. 2

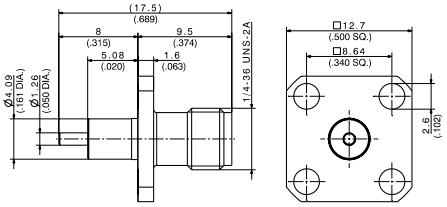

Fig. 3

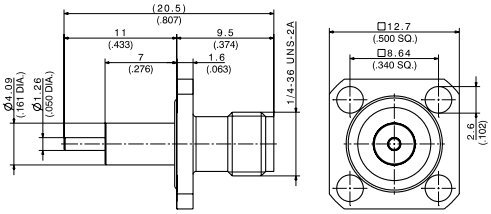

Fig. 4

HUBER+SUHNER type	Item no.	Packaging	Plating body	Notes	Fig.
23_SMA-50-0-3/111_NE	22640092	single	gold	extended dielectric	1
23_SMA-50-0-13/111_NE 23_SMA-50-0-13/111_NH	22640097 22658873	single bulk 100 pcs.	gold	extended dielectric	2
23_SMA-50-0-53/199_NE 23_SMA-50-0-53/199_NH	22641394 22649843	single	passivated stainless steel	extended dielectric	1
23_SMA-50-0-272/133_NH	23030310	bulk 100 pcs	SUCOPLATE®	extended dielectric	3
23_SMA-50-0-324/111_NY	84035778	tray 100 pcs.	SUCOPRO® gold plating	extended dielectric with panel sealing	4

All highlighted types are HUBER+SUHNER ECO types.

Cable groups see page 32 Assembly tools see page 531 Mounting holes/PCB layouts see page 561

Series SMA – receptacles

Straight panel receptacle

With coaxial end, jack (female)

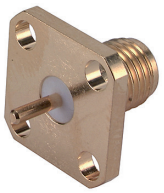

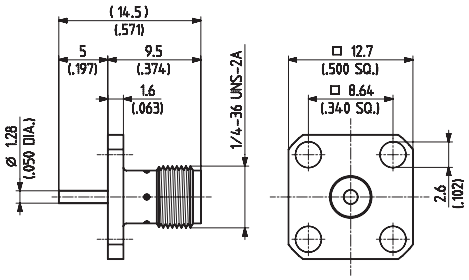

HUBER+SUHNER type	Item no.	Packaging	Plating body	Notes
23_SMA-50-0-21/111_NE	22640101	single	gold	flush dielectric

Right angle panel receptacle

With solder end, jack (female)

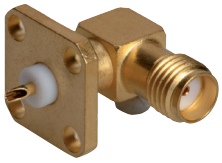

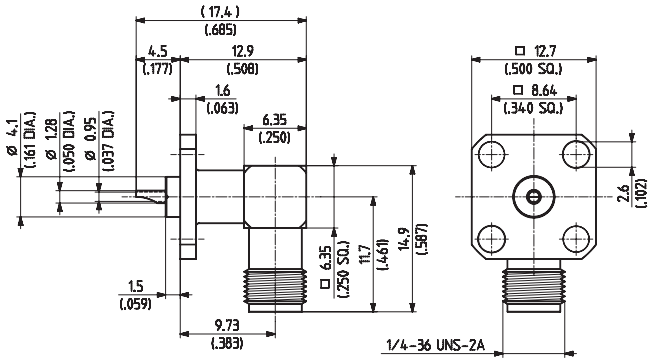

HUBER+SUHNER type	Item no.	Packaging	Plating body	Notes
28_SMA-50-0-1/111_NE	22641321	single	gold	extended dielectric

Cable groups see page 32 | Assembly tools see page 531 | Mounting holes/PCB layouts see page 561

L'IMPULSION
Retrouvez nous sur
www.limpulsion.fr

Series SMA – receptacles

26.5 GHz – straight panel receptacle

With tab end, jack (female)



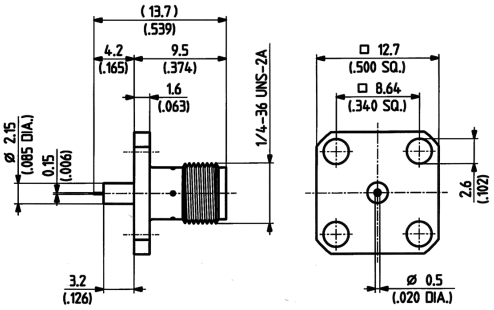

HUBER+SUHNER type	Item no.	Packaging	Plating body	Mounting hole	Notes
23_SMA-50-0-94/199_NE	22649049	single	passivated stainless steel	ML 93	extended dielectric

Cable groups see page 32 | Assembly tools see page 531 | Mounting holes/PCB layouts see page 561

L'IMPULSION | Retrouvez nous sur www.limpulsion.fr

Series SMA – PCB connectors

Straight PCB jacks (female)

- Edge mount



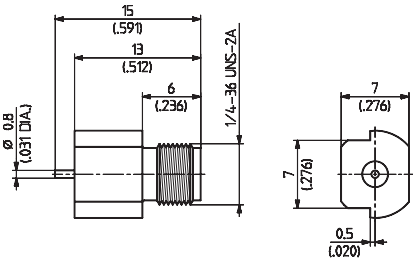

Fig. 1

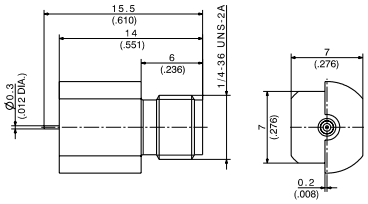

Fig. 2

HUBER+SUHNER type	Item no.	Packaging	Plating body	Mounting hole	Fig.
82_SMA-S50-0-45/111_NE 82_SMA-S50-0-45/111_NM	22652330 84037646	single tape and reel 500 pcs.	SUCOPRO® gold plating	ML 132	1
92_SMA-50-0-10/111_NE 92_SMA-50-0-10/111_NM	84120623 84036781	single tape and reel 500 pcs.	SUCOPRO® gold plating	ML 132	2

All highlighted types are HUBER+SUHNER ECO types.

Straight PCB jacks (female)

- Without stand-off

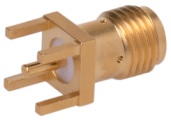

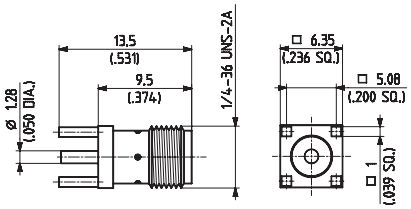

HUBER+SUHNER type	Item no.	Packaging	Plating body	Mounting hole
82_SMA-50-0-1/111_NE 82_SMA-50-0-1/111_NH	22543359 22644334	single bulk 100 pcs.	gold	ML 41

Cable groups see page 32 | Assembly tools see page 531 | Mounting holes/PCB layouts see page 561

Series SMA – PCB connectors

Right angle PCB jacks (female)

- Without stand-off



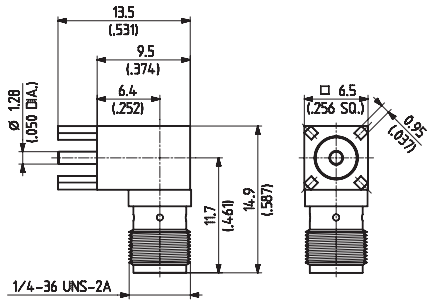

HUBER+SUHNER type	Item no.	Packaging	Plating body	Mounting hole
85_SMA-50-0-101/111_NE	22658792	single	gold	ML 41
85_SMA-50-0-101/111_NH	22652140	bulk 100 pcs.		

- With stand-off



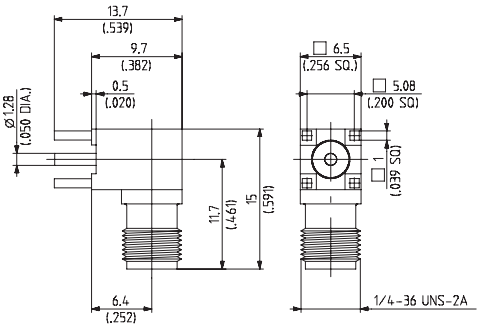

HUBER+SUHNER type	Item no.	Packaging	Plating body	Mounting hole
85_SMA-50-0-144/111_YH	23000527	bulk 100 pcs.	gold	ML 41

Cable groups see page 32 | Assembly tools see page 531 | Mounting holes/PCB layouts see page 561

Series SMA – protective caps and shorts

Caps for jacks

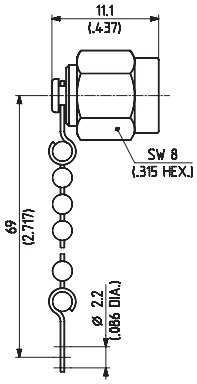

Fig. 1

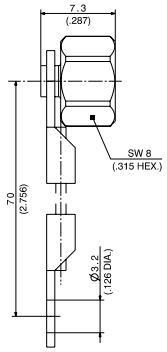

Fig. 2





HUBER+SUHNER type	Item no.	Packaging	Plating body	Notes	Fig.
62_SMA-0-0-1/-11_E	22640159	single	gold	with chain	1
62_SMA-0-0-8/--3_E	84120887	single	SUCOPLATE®	with wire, IP68	2

All highlighted types are HUBER+SUHNER ECO types.

Shorting cap

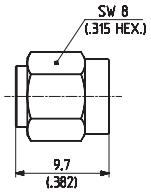



HUBER+SUHNER type	Item no.	Packaging	Plating body
64_SMA-50-0-1/111_NE	22640161	single	gold

Cable groups see page 32 | Assembly tools see page 531 | Mounting holes/PCB layouts see page 561

L'IMPULSION
Retrouvez nous sur
www.limpulsion.fr

Series PC 3.5 – precision subminiature connectors

Description

HUBER+SUHNER PC 3.5 connectors are precision connectors for use in microwave applications up to 26.5 GHz. They are especially suitable for use with semi-rigid cables and microwave components. They are intermateable with SMA and SK (2.92 mm) connectors. Due to an air dielectric interface and the more durable construction a superior repeatability further enhances the performance.

Content

Description	223
Interface dimensions in mm/inches	223
Technical data	224
Cable connectors	225
Flange mount connectors	227
Transition pins	228

Interface dimensions (mm/inches)

Plug (male)

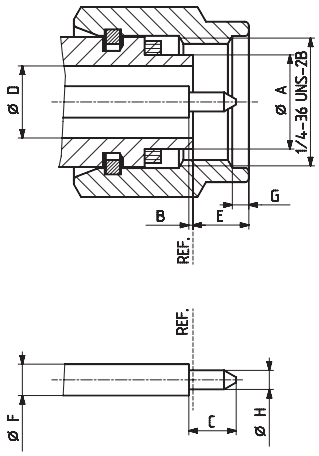

	Plug		Jack	
	min.	max.	min.	max.
A	4.55/0.179	4.58/0.180	4.60/0.181	4.63/0.182
B	0.00/0.000	0.08/0.003	0.00/0.000	0.08/0.003
C	2.03/0.080	2.29/0.090	2.79/0.110	3.18/0.125
D	3.49/0.138	3.51/0.138	3.49/0.138	3.51/0.138
E	2.36/0.093	3.56/0.135	1.88/0.074	1.98/0.078
F	1.51/0.060	1.52/0.060	1.51/0.060	1.52/0.060
G	0.38/0.015	1.14/0.045	3.35/0.132	4.62/0.182
H	0.92/0.036	0.93/0.037	0.38/0.015	1.14/0.045
I	-	-	5.30/0.209	5.40/0.213
K	-	-	5.54/0.218	-

Jack (female)

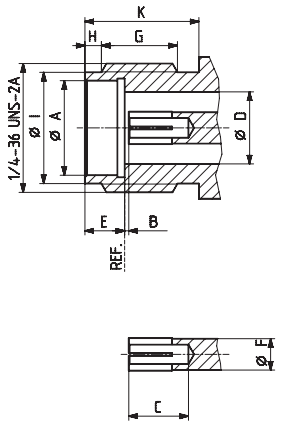

Interface dimensions conformable to the standards:

International: IEC 60169-23

L'IMPULSION Retrouvez nous sur www.limpulsion.fr

Series PC 3.5 – technical data

Electrical data	Requirements
Impedance	50 Ω
Frequency range	DC to 26.5 GHz
Dielectric withstanding voltage (at sea level) • RG 405/U • RG 402/U	 750 V rms, 50 Hz 1000 V rms, 50 Hz
Working voltage (at sea level) • RG 405/U • RG 402/U	 ≤ 250 V rms, 50 Hz ≤ 335 V rms, 50 Hz
Insulation resistance	≥ $5 \cdot 10^3$ MΩ
Contact resistance • Centre contact • Outer contact	 ≤ 3 mΩ ≤ 2 mΩ
RF leakage	≥ 100 dB · f (GHz) dB
VSWR (typical values) • RG 405/U • RG 402/U • Adaptors	 ≤ 1.13 up to 26.5 GHz ≤ 1.10 up to 26.5 GHz ≤ 1.08 up to 18 GHz/≤ 1.15 up to 26.5 GHz

Mechanical data	Requirements
Coupling nut torque • Recommended	 0.80 to 1.10 Nm/7.1 to 9.7 in. lbs
Coupling nut retention force	≥ 270 N/60.7 lbs
Contact captivation	≥ 27 N/6.1 lbs
Cable retention force [1]	see pages 32 - 41
Durability (matings)	≥ 500

Environmental data	Test conditions
Temperature range	–60 to +100 C /–76 to +212 °F
Thermal shock	MIL-STD-202, method 107, condition B
Moisture resistance	MIL-STD-202, method 106
Corrosion	saltspray test acc. to MIL-STD-202, method 101, condition B
Vibration	MIL-STD-202, method 204, condition D
Shock	MIL-STD-202, method 213, condition I

Material data		
Connector part	Material	Plating
Bodies	stainless steel	passivated
Cable entries	brass	gold
Centre contacts	copper-beryllium alloy	gold
Support beads	polystyrene, crosslinked	
Gaskets	silicone rubber	

Performance values are typical for the connector interface. Individual component or connector performance may vary depending on the connector design, attachment (e.g. cable, PCB) or application. For detailed specifications please refer to the specific data sheets on our website www.hubersuhner.com.

[1] Value considers maximum load of the cables without irreversible variations of specifications.

Series PC 3.5 – cable connectors

Straight cable plugs (male)

For semi-rigid cables
- Cable entry soldered
- Centre contact plugged-in

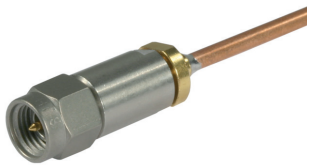

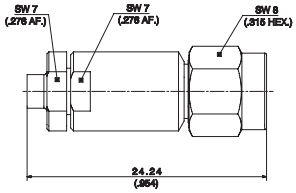

Fig. 1

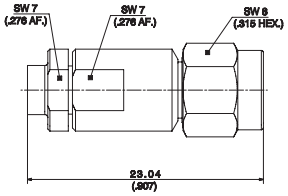

Fig. 2

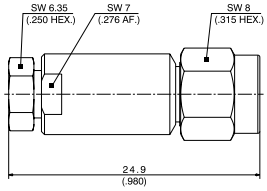

Fig. 3

HUBER+SUHNER type	Item no.	Cable group (example)	Packaging	Assembly instruction	Fig.
11_PC35-50-2-4/199_UE	84009440	Y3, Y16 (EZ_86)	single	0000215467	1
11_PC35-50-3-4/199_UE	84009380	Y5, Y12 (EZ_141)		0000215467	2
11_PC35-50-2-5/199_UE	84139219	Y11 (MULTIFLEX_86)		0000381973	3

Straight cable jacks (female)

For semi-rigid cables
- Cable entry soldered
- Centre contact plugged-in

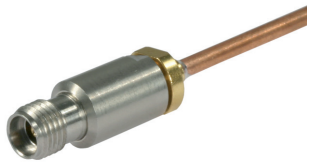

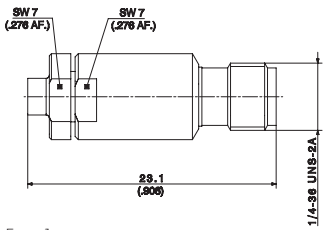

Fig. 1

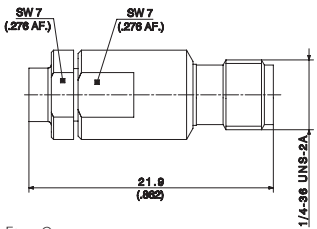

Fig. 2

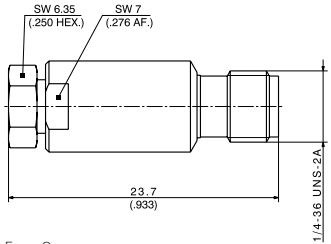

Fig. 3

HUBER+SUHNER type	Item no.	Cable group (example)	Packaging	Assembly instruction	Fig.
21_PC35-50-2-4/199_UE	84009419	Y3, Y16 (EZ_86)	single	0000215467	1
21_PC35-50-3-3/199_UE	84009382	Y5, Y12 (EZ_141)		0000215467	2
21_PC35-50-2-5/199_UE	84139085	Y11 (MULTIFLEX_86)		0000381865	3

Cable groups see page 32 | Assembly tools see page 531 | Mounting holes/PCB layouts see page 561

L'IMPULSION
Retrouvez nous sur
www.limpulsion.fr

Series PC 3.5 – cable connectors

Straight bulkhead cable jacks (female)

For semi-rigid cables

- Bulkhead mounted
- Cable entry soldered
- Centre contact plugged-in
- With panel seal



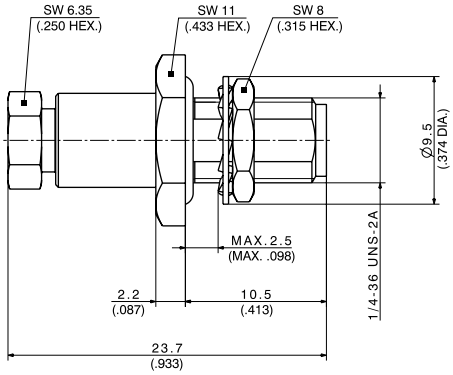

Fig. 1

HUBER+SUHNER type	Item no.	Cable group (example)	Packaging	Assembly instruction	Mounting hole	Fig.
24_PC35-50-2-3/19-_UE	84023357	Y3, Y16 (EZ_86)	single	0000238568	ML 35	1

Cable groups see page 32 | Assembly tools see page 531 | Mounting holes/PCB layouts see page 561

L'IMPULSION
Retrouvez nous sur
www.limpulsion.fr

Series PC 3.5 – flange mount connectors

Flange mount, jacks (female)

- Panel mounted



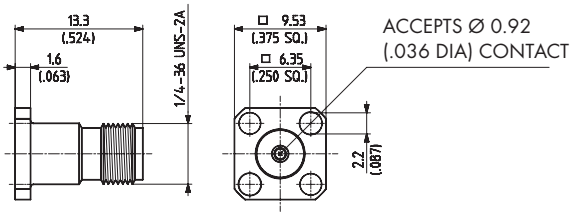

Fig. 1

Fig. 2

HUBER+SUHNER type	Item no.	Packaging	Flange type	Fig.
23_PC35-50-0-51/199_UE	22644918	single	square	1
23_PC35-50-0-53/199_UE	22644910			2

- Panel mounted



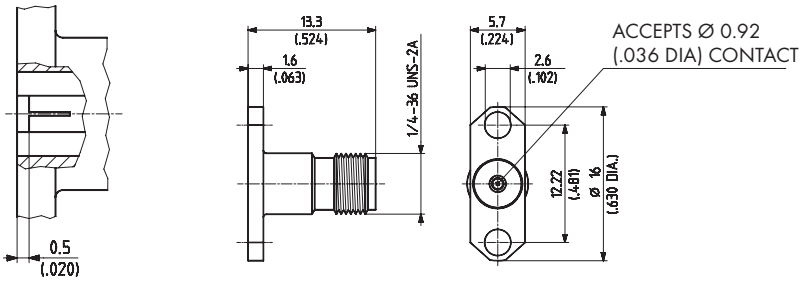

HUBER+SUHNER type	Item no.	Packaging	Flange type
23_PC35-50-0-54/199_UE	22644911	single	2-hole

Cable groups see page 32 | Assembly tools see page 531 | Mounting holes/PCB layouts see page 561

L'IMPULSION
Retrouvez nous sur
www.limpulsion.fr

Series PC 3.5 – transition pins

Transition pins

for PC 3.5 connectors with interchangeable contact pins

Pin contact

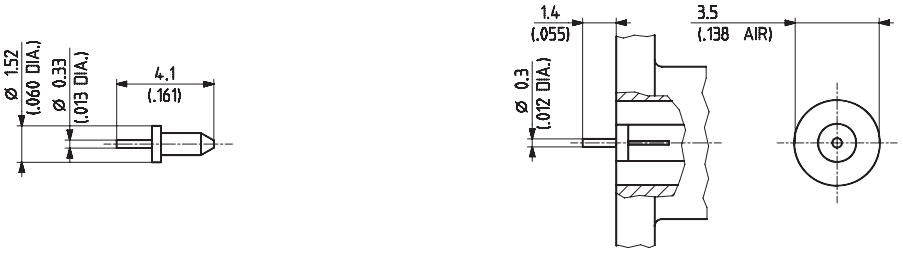

HUBER+SUHNER type	Item no.	Packaging	Plating
73_Z-0-0-168	22644927	10 pins	gold

Tab contact

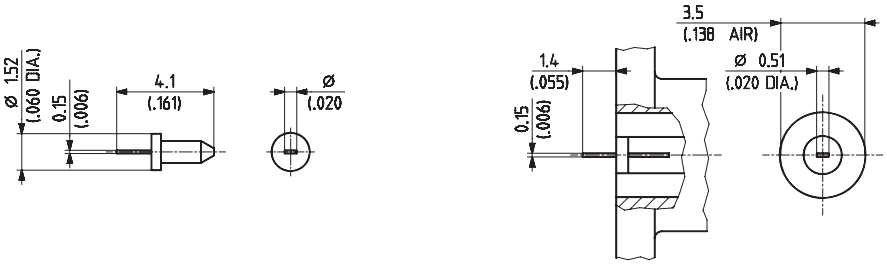

HUBER+SUHNER type	Item no.	Packaging	Plating
73_Z-0-0-169	22644931	10 pins	gold

Tab contact

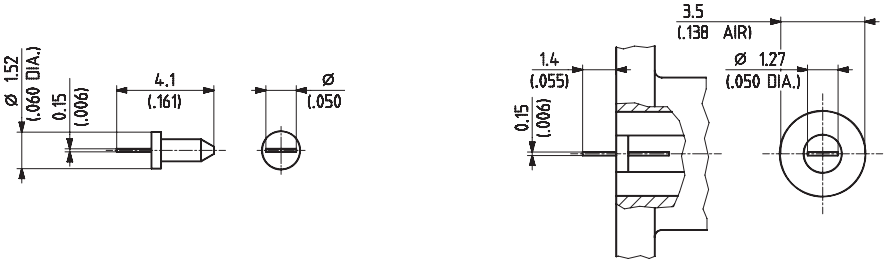

HUBER+SUHNER type	Item no.	Packaging	Plating
73_Z-0-0-170	22644932	10 pins	gold

Cable groups see page 32 | Assembly tools see page 531 | Mounting holes/PCB layouts see page 561

L'IMPULSION | Retrouvez nous sur www.limpulsion.fr

Series SK (2.92 mm standard) – prec. submini. connectors

Description

HUBER+SUHNER SK connectors are precision connectors for microwave applications up to 40 GHz.

They are intermateable with series SMA and PC 3.5. They have a high mechanical stability and an excellent repeatability. The shortened male pin ensures a non-destructive mating process. The glass beads, when used in conjunction with the SK launchers, enable the connectors to be replaced without disturbing the hermetic seal.

For a mechanical decoupling between glass bead and internal microwave circuit, stress relief contacts are available.

Content

Description	229
Interface dimensions in mm/inches	229
Technical data	230
Cable connectors	231
Launchers	233
Accessories	233

Interface dimensions (mm/inches)

Plug (male)

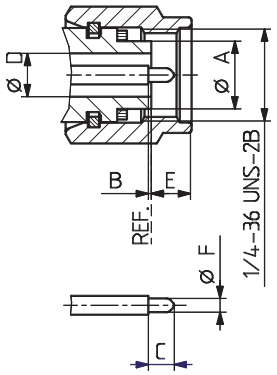

	Plug		Jack	
	min.	max.	min.	max.
A	4.53/0.178	4.57/0.180	4.60/0.181	4.64/0.183
B	0.00/0.000	0.13/0.005	0.00/0.000	0.13/0.005
C	1.55/0.061	1.65/0.065	2.80/0.110	-
D	2.89/0.114	2.95/0.116	2.89/0.114	2.95/0.116
E	-	3.28/0.129	1.88/0.074	1.98/0.078
F	0.91/0.036	0.94/0.037	5.90/0.232	-
G	-	-	4.40/0.173	-
H	-	-	0.70/0.028	0.90/0.036
I	-	-	5.30/0.208	5.40/0.213

Jack (female)

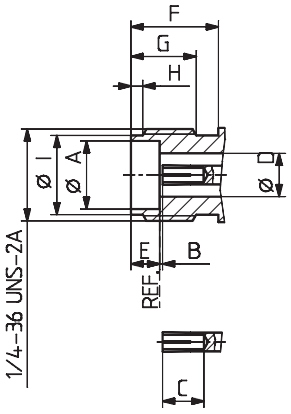

L'IMPULSION
Retrouvez nous sur
www.limpulsion.fr

Series SK (2.92 mm standard) – technical data

Electrical data	Requirements
Impedance	50 Ω
Frequency range	DC to 40 GHz
Dielectric withstanding voltage (at sea level)	750 V rms, 50 Hz
Working voltage (at sea level) mated/unmated	≤ 250 V rms, 50 Hz
Insulation resistance	≥ 5 • 10^3 MΩ
Contact resistance • Centre contact • Outer contact	 ≤ 3 mΩ ≤ 2 mΩ
VSWR (typical values) • Cable connectors (cable assembly with 2 connectors) • Launchers	 ≤ 1.37 DC to 40 GHz ≤ 1.43 DC to 40 GHz

Mechanical data	Requirements
Coupling nut torque • Recommended	 1.30 Nm/11.47 in lbs
Contact captivation	≥ 27 N/4.9 lbs
Durability (matings)	≥ 500

Environmental data	Requirements
Temperature range	–40 to +125 °C/–40 to +257 °F
Thermal shock	MIL-STD-202, method 107, condition B
Vibration	MIL-STD-202, method 204, condition D

Material data		
Connector parts	Material	Plating
Bodies, cable connectors Bodies, receptacles	copper beryllium alloy/stainless steel stainless steel/copper alloy	gold passivated/gold
Centre contacts	copper beryllium alloy	gold
Support beads	PPO (polyphenylene oxide)	

Performance values are typical for the connector interface. Individual component or connector performance may vary depending on the connector design, attachment (e.g. cable, PCB) or application. For detailed specifications please refer to the specific data sheets on our website www.hubersuhner.com.

Series SK (2.92 mm standard) – cable connectors

Straight cable plugs (male)

For semi-rigid cables

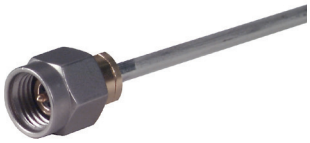

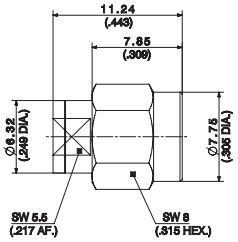

Fig. 1

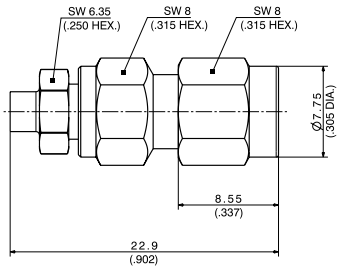

Fig. 2

HUBER+SUHNER type	Item no.	Cable group (example)	Packaging	Assembly instruction	Fig.	Notes
11_SK-50-2-56/119_NE	84013230	Y16 (EZ_86)	single	27445	1	plug
11_SK-50-2-60/199_NE	84098644	Y11 (MULTIFLEX_86)		0000331903	2	plug

Straight cable jacks (female)

For semi-rigid cables



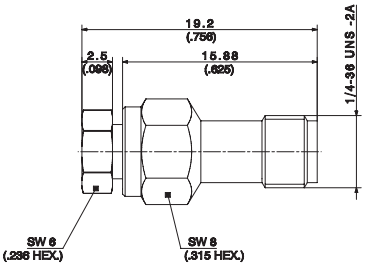

Fig. 1

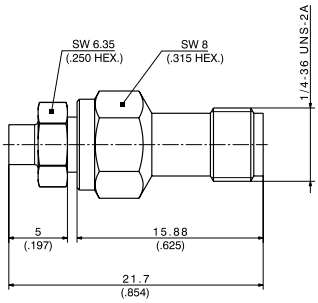

Fig. 2

HUBER+SUHNER type	Item no.	Cable group (example)	Packaging	Assembly instruction	Fig.	Notes
21_SK-50-2-58/199_NE	84019664	Y16 (EZ_86)	single	0000234990	1	jack
21_SK-50-2-61/199_NE	84094378	Y11 (MULTIFLEX_86)		0000326138	2	jack

Cable groups see page 32 | Assembly tools see page 531 | Mounting holes/PCB layouts see page 561

Series SK (2.92 mm standard) – cable connectors

Straight bulkhead cable jacks (female)

For semi-rigid cables
- with panel seal

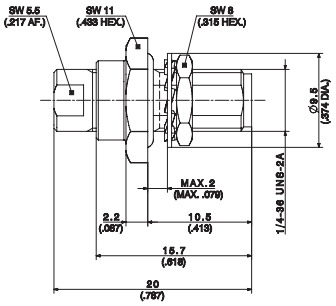



HUBER+SUHNER type	Item no.	Cable group (example)	Packaging	Assembly instruction	Mounting hole	Fig.
24_SK-50-2-55/1--_NE	84016419	Y10 (EZ_118-TP)	single	0000229976	ML 35	1

Series SK (2.92 mm standard) – launchers

"Spark plug" launchers

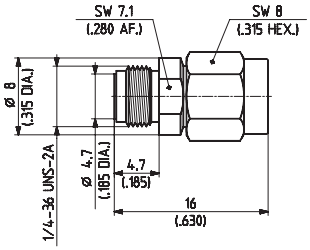

Fig. 1

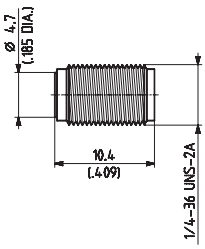

Fig. 2



HUBER+SUHNER type	Item no.	Packaging	Mounting hole	Suitable glass-bead	Fig.
12_SK-50-0-51/199_NE	22645974	single	ML 75	73_Z-0-0-203 [1]	1
22_SK-50-0-51/199_NE	22645975	single	ML 75	73_Z-0-0-203 [1]	2

[1] For fixing hermetic seal while soldering, fixture 74_Z-0-0-226 is recommended, see page 545.

Cable groups see page 32 | Assembly tools see page 531 | Mounting holes/PCB layouts see page 561

L'IMPULSION | Retrouvez nous sur www.limpulsion.fr

Series SK (2.92 mm standard) – launchers

Panel launchers (male)



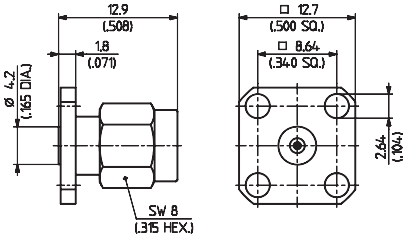

Fig. 1

HUBER+SUHNER type	Item no.	Packaging	Mounting hole	Suitable glass-bead	Fig.
13_SK-50-0-51/199_NE	22645978	single	ML77	73_Z-0-0-203 1)	1

1) For fixing hermetic seal while soldering, fixture 74_Z-0-0-227 is recommended, see page 545.

Panel launchers (male)



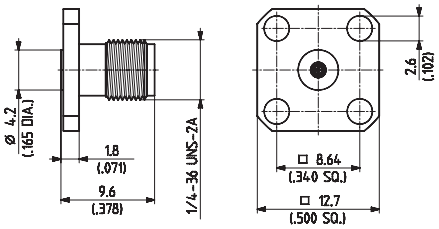

Fig. 1

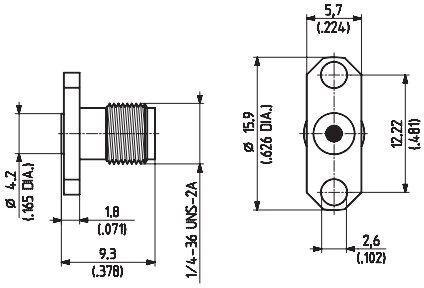

Fig. 2

HUBER+SUHNER type	Item no.	Packaging	Mounting hole	Suitable glass-bead	Fig.
23_SK-50-0-51/199_NE	22645979	single	ML77	73_Z-0-0-203 1)	1
23_SK-50-0-52/199_NE	22645977	single	ML78	73_Z-0-0-203 1)	2

1) For fixing hermetic seal while soldering, fixture 74_Z-0-0-227 is recommended, see page 545.

Series SK (2.92 mm) – accessories

Glass bead for 12 SK, 13 SK, 22 SK, 23 SK launchers
(package with 1 piece)

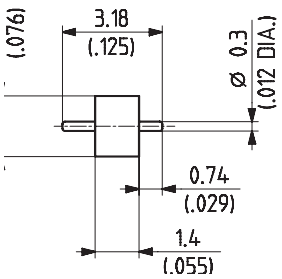

HUBER+SUHNER type
73_Z-0-0-203/11-_E
Item no. 22645983

Microstrip stress relief contacts
(package with 100 pieces)

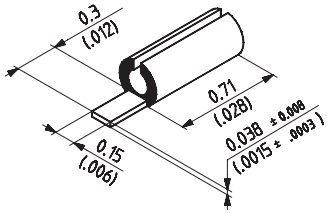

HUBER+SUHNER type
73_Z-0-0-204/1--_NH
Item no. 22645980

Cable groups see page 32 | Assembly tools see page 531 | Mounting holes/PCB layouts see page 561

L'IMPULSION
Retrouvez nous sur
www.limpulsion.fr

L'IMPULSION
Retrouvez nous sur
www.limpulsion.fr

Series PC 1.85 – precision subminiature connectors

Description

HUBER+SUHNER PC 1.85 connectors are precision connectors for use in microwave applications up to 67 GHz. The connectors features best electrical performance, excellent mechanical stability as well as extreme reliability. They are particularly well suited for semi-rigid, semi-flexible and flexible microwave cables. PC 1.85 is intermateable with PC 2.4.

Content

Description 235
Interface dimensions in mm/inches 235
Technical data 236
Cable connectors 237

Interface dimensions (mm/inches)

Plug (male)

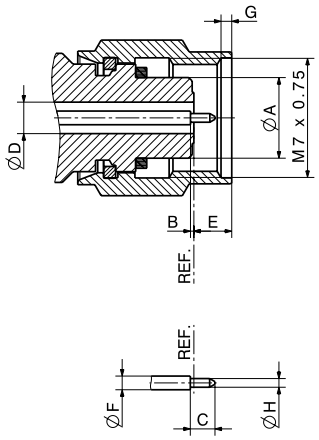

Jack (female)

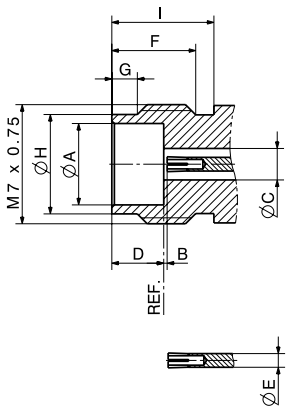

	Plug		Jack	
	min.	max.	min.	max.
A	4.725/0.186	4.75/0.187	4.77/0.1878	4.795/0.1888
B	0.00/0.00	0.08/0.003	0.00/0.00	0.08/0.003
C	1.34/0.053	1.44/0.057	1.84/0.07233	1.86/0.07333
D	1.838/0.07233	1.862/0.07333	3.00/0.118	3.10/0.122
E	1.85/0.073	2.45/0.096	0.791/0.0311	0.816/0.0321
F	0.791/0.0311	0.816/0.0321	4.80/0.189	5.06/0.199
G	0.5/0.02	0.76/0.03	1.37/0.054	1.63/0.064
H	0.498/0.0196	0.523/ 0.0206	5.79/0.228	5.89/0.232
I	-	-	6.00/ 0.236	-

Interface dimensions conformable to the standards:

International: IEC 60169-23

L'IMPULSION Retrouvez nous sur www.limpulsion.fr

Series PC 1.85 – technical data

Electrical data	Requirements
Impedance	50 Ω
Frequency range	DC to 67 GHz
Dielectric withstanding voltage (at sea level)	500 V rms, 50 Hz
Working voltage (at sea level)	150 V rms, 50 Hz
Insulation resistance	≥ 5 • 10^3 MΩ
Contact resistance • Centre contact • Outer contact	 ≤ 4 mΩ ≤ 2.5 mΩ
Return loss (typical values cable assemblies) • Multiflex 86 HE • Semi-rigid 86 (SR_86_LA) • Sucoform 86	 ≤ 16 dB up to 67 GHz ≤ 15 dB up to 67 GHz ≤ 15 dB up to 67 GHz

Mechanical data	Requirements
Coupling nut torque • Recommended	 0.8 to 1.1 Nm/7.1 to 9.7 in lbs
Contact captivation	≥ 20 N /4.5 lbs
Durability (matings)	≥ 500

Environmental data	Test conditions
Temperature range	–55 to +155 °C/–67 to +311 °F
Thermal shock	IEC 60068-2-14
Damp heat steady state	IEC 60068-2-78
Vibration	IEC 60068-2-6
Shock	IEC 60068-2-27

Material data		
Connector part	Material	Plating
Body/nut	stainless steel	
Cable entry	BZ4	SUCOPRO®/gold plating
Centre contact	copper beryllium alloy	SUCOPRO®/gold plating
Support bead	LCP	
Gaskets	silicone rubber	

Performance values are typical for the connector interface. Individual component or connector performance may vary depending on the connector design, attachment (e.g. cable, PCB) or application. For detailed specifications please refer to the specific data sheets on our website www.hubersuhner.com.

L'IMPULSION
Retrouvez nous sur
www.limpulsion.fr

Series PC 1.85 – cable connectors

Straight cable plugs (male)

For semi-rigid, Sucoform and Multiflex cables
- Cable entry soldered
- Centre contact plugged-in

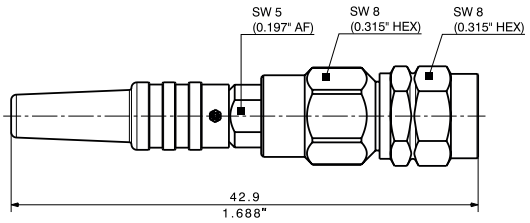



HUBER+SUHNER type	Item no.	Cable group (example)	Packaging	Assembly instruction
11_PC185-50-2-4/19-_NE	84144282	Y11 (MULTIFLEX_86_HE)	single	0000373606

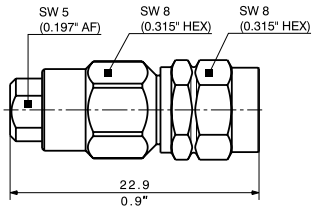



HUBER+SUHNER type	Item no.	Cable group (example)	Packaging	Assembly instruction
11_PC185-50-2-5/19-_NE	84152948	U99 (SR_86_LA)	single	0000373655

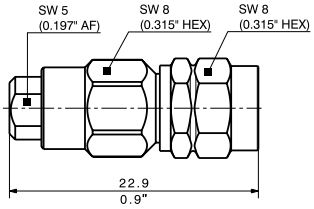



HUBER+SUHNER type	Item no.	Cable group (example)	Packaging	Assembly instruction
11_PC185-50-2-6/19-_NE	85001960	Y16 (SUCOFORM_86)	single	0000388588

Cable groups see page 32 | Assembly tools see page 531 | Mounting holes/PCB layouts see page 561

Series PC 1.85 – cable connectors

Straight cable jacks (female)

For semi-rigid, Sucoform and Multiflex cables
- Cable entry soldered
- Centre contact plugged-in

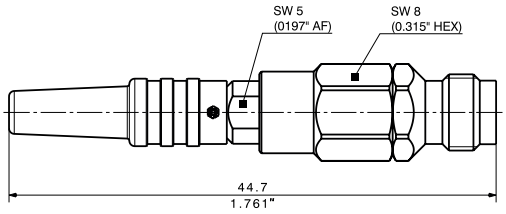



HUBER+SUHNER type	Item no.	Cable group (example)	Packaging	Assembly instruction
21_PC185-50-2-4/19-_NE	84144175	Y11 (MULTIFLEX_86_HE)	single	0000397321

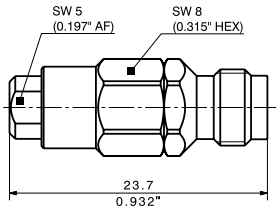



HUBER+SUHNER type	Item no.	Cable group (example)	Packaging	Assembly instruction
21_PC185-50-2-5/19-_NE	85001993	U99 (SR_86_LA)	single	0000397354

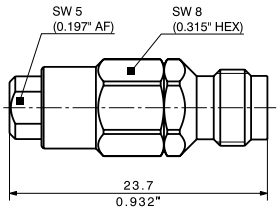



HUBER+SUHNER type	Item no.	Cable group (example)	Packaging	Assembly instruction
21_PC185-50-2-6/19-_NE	85002004	Y16 (SUCOFORM_86)	single	0000397358

Cable groups see page 32 | Assembly tools see page 531 | Mounting holes/PCB layouts see page 561

L'IMPULSION
Retrouvez nous sur
www.limpulsion.fr

Series 1.0/2.3 inserts according to DIN 41626/2

Description

HUBER+SUHNER coaxial "inserts" 1.0/2.3 are suitable for the insertion of mixed layout connectors DIN 41612 (pattern M). These inserts feature a slide-on coupling mechanism, which ensures a short connect-disconnect time. Impedance accuracy, fast and easy assembly as well as high reproducibility due to the full crimp cable entry are typical characteristics of these HUBER+SUHNER connectors. The 1.0/2.3 inserts are suitable for applications up to 4 GHz.

Contents

Description	239
Interface dimensions in mm/inches	239
Technical data	240
Cable connectors	242
PCB connectors	243

Interface dimensions (mm/inches)

Plug (male)

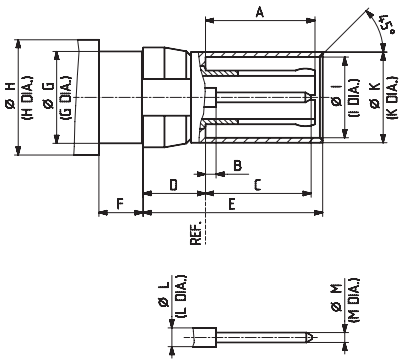

Jack (female)

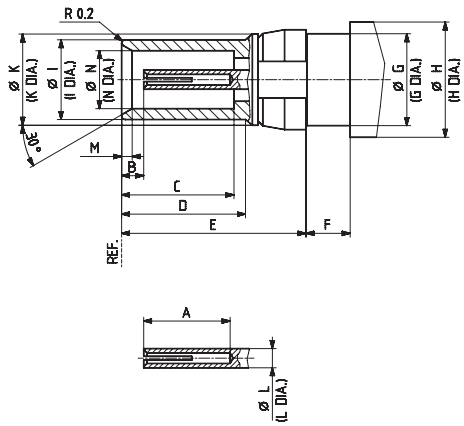

	Plug		Jack	
	min.	max.	min.	max.
A	5.40/0.213	5.70/0.224	4.50/0.177	-
B	-	1.15/0.045	1.15/0.045	1.45/0.057
C	5.20/0.205	5.50/0.217	5.80/0.228	5.90/0.232
D	3.05/0.120	3.20/0.126	6.40/0.252	6.50/0.256
E	9.25/0.364	9.35/0.368	9.50/0.374	9.60/0.378
F	2.22/0.087	2.40/0.094	2.22/0.087	2.40/0.094
G	4.76/0.187	4.79/0.189	4.76/0.187	4.79/0.189
H	-	6.00/0.236	-	6.00/0.236
I	4.20/0.165	4.28/0.169	4.03/0.159	4.15/0.163
K	4.66/0.183	4.78/0.188	4.72/0.186	4.75/0.187
L	1.00/0.039 nom.		1.00/0.039 nom.	
M	0.48/0.019	0.52/0.020	0.50/0.020	0.60/0.024
N	-	-	3.00/0.118	3.06/0.120

Interface dimensions conformable to the standards:

Germany: DIN 41626/2

L'IMPULSION Retrouvez nous sur www.limpulsion.fr

Series 1.0/2.3 – technical data

Electrical data	Requirements
Impedance	50 Ω
Frequency range (GHz)	DC to 4
Dielectric withstanding voltage (at sea level)	750 V rms, 50 Hz (depending on cable)
Working voltage (at sea level)	250 V rms, 50 Hz (depending on cable)
Insulation resistance	≥ 200 MΩ
Contact resistance • Centre conductor • Outer conductor	 ≤ 10 mΩ ≤ 3 mΩ

Mechanical data	Requirements
Engagement force	≤ 10 N/2.3 lbs
Disengagement force	≤ 10 N/2.3 lbs
Contact captivation	≥ 10 N
Cable retention force [1]	see pages 32 – 41
Durability (matings)	≥ 500

Environmental data	Requirements
Temperature range	–55 to +125 °C/–67 to +257 °F
Climatic category	IEC → 50/125/56
Moisture resistance	MIL-STD-202, method 106
Corrosion	saltspray test acc. to MIL-STD-202, method 101, condition B
Vibration	MIL-STD-202, method 204, condition A

Performance values are typical for the connector interface. Individual component or connector performance may vary depending on the connector design, attachment (e.g. cable, PCB) or application. For detailed specifications please refer to the specific data sheets on our website www.hubersuhner.com.

[1] Value considers maximum load of the cables without irreversible variations of specifications.

L'IMPULSION
Retrouvez nous sur
www.limpulsion.fr

Series 1.0/2.3 – technical data

Material data		
Connector part	Material	Plating
Bodies	brass	gold/SUCOPRO® gold plating
Outer contacts	copper-beryllium alloy, brass	gold/SUCOPRO® gold plating
Pin contacts	brass	gold/SUCOPRO® gold plating
Socket contacts	copper-beryllium alloy	gold/SUCOPRO® gold plating
Crimp ferrules	copper	gold/SUCOPRO® gold plating
Insulators	PTFE or PFA	

Performance values are typical for the connector interface. Individual component or connector performance may vary depending on the connector design, attachment (e.g. cable, PCB) or application. For detailed specifications please refer to the specific data sheets on our website www.hubersuhner.com.

Typical application

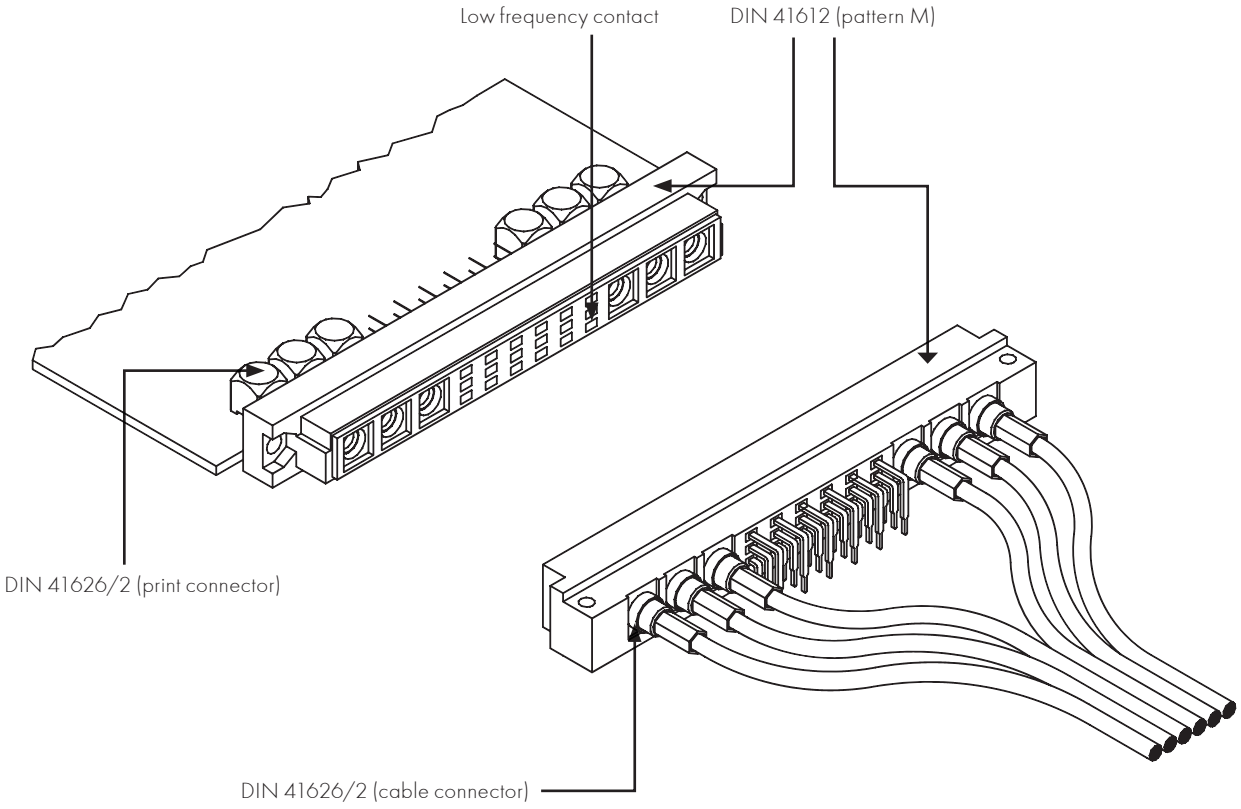

L'IMPULSION
Retrouvez nous sur
www.limpulsion.fr

Series 1.0/2.3 – cable connectors

Straight cable plugs (male)

- HUBER+SUHNER full crimp
- Removal tool see page 546

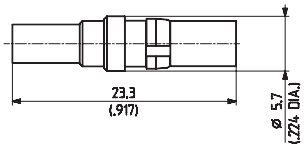



HUBER+SUHNER type	Item no.	Cable group (example)	Packaging	Assembly instruction	Crimp insert	Plating
11_1023-C50-2-2/111_NE-1 [1]	84148590	U4 (K_02252_D, ENVIROFLEX_316_D)	single	9191	1 A	SUCOPRO® gold plating
11_1023-C50-2-2/111_NE 11_1023-C50-2-2/111_NH	22648559 22649631		single bulk 100 pcs.			gold
11_1023-C50-2-3/111_NE 11_1023-C50-2-3/111_NH	22648780 22649007	U2 (RG_316_/U, ENVIROFLEX_316)	single bulk 100 pcs.			gold

Straight cable jacks (female)

- HUBER+SUHNER full crimp
- Removal tool see page 546

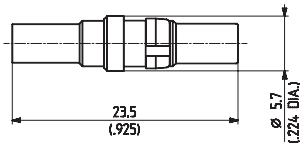



HUBER+SUHNER type	Item no.	Cable group (example)	Packaging	Assembly instruction	Crimp insert	Plating
21_1023-C50-2-2/111_NE	22648560	U4 (K_02252_D, ENVIROFLEX_316_D)	single	9191	1 A	gold
21_1023-C50-2-3/111_NE	22648790	U2 (RG_316_/U, ENVIROFLEX_316)				gold

Cable groups see page 32 | Assembly tools see page 531 | Mounting holes/PCB layouts see page 561

L'IMPULSION
Retrouvez nous sur
www.limpulsion.fr

Series 1.0/2.3 – PCB connectors

Right angle PCB jacks (female)

- Removal tool see page 546

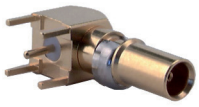

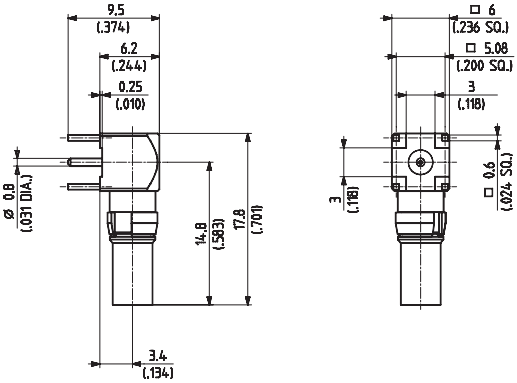

HUBER+SUHNER type	Item no.	Packaging	Mounting hole	Plating
85_1023-C50-0-1/111_NE	22648561	single	ML 15	gold

[1] Prefered type

Cable groups see page 32 | Assembly tools see page 531 | Mounting holes/PCB layouts see page 561

L'IMPULSION
Retrouvez nous sur
www.limpulsion.fr

L'IMPULSION | Retrouvez nous sur www.limpulsion.fr

Series QLA 00 – subminiature coaxial connectors

Description

The QLA 00 series contains connectors with a quick latch coupling mechanism: connection is achieved by simply pushing the plug into the jack. Three latching springs automatically engage, thereby securing the mated connectors against axial forces. No twisting action is required. The connectors are easily released by slightly pulling back the outer sleeve of the plug. This coupling mechanism provides a fast and reliable connection for applications up to 1.4 GHz.

Content

Description	245
Compatibility	245
Interface dimensions in mm/inches	245
Technical data	246
Cable connectors	247
Receptacles with solder end	249
PCB connectors	250

Compatibility

All connectors of the series QLA 00 are without any restrictions intermateable with Lemo series 00.250.

Interface dimensions (mm/inches)

Plug (male)

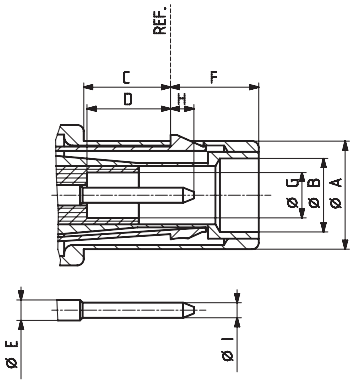

Jack (female)

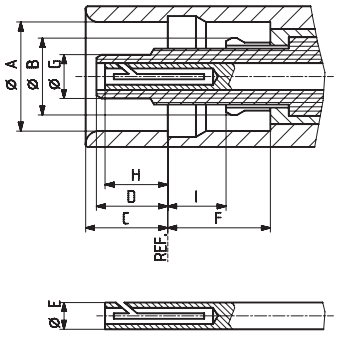

	Plug		Jack	
	min.	max.	min.	max.
A	4.96/0.195	5.03/0.198	5.05/0.199	5.11/0.201
B	3.38/0.133	3.44/0.135	3.50/0.138 [1]	3.55/0.140 [1]
C	3.93/0.155	4.08/0.161	3.73/0.147	3.86/0.152
D	3.55/0.140	-	-	3.48/0.137
E	0.95/0.037 nom.		1.24/0.049 nom.	
F	4.00/0.157	4.16/0.164	4.23/0.167	4.88/0.192
G	2.10/0.830	2.16/0.085	1.95/0.077	2.03/0.080
H	-	1.32/0.052	-	3.30/0.130
I	0.69/0.027	0.72/0.028	2.35/0.093	2.90/0.114

Interface dimensions conformable to the standards:

NIM-CAMAC-Standard CD/N549

[1] Prior to slotting

L'IMPULSION Retrouvez nous sur www.limpulsion.fr

Series QLA 00 – technical data

Electrical data	Requirements
Impedance	50 Ω
Frequency range	DC to 1.4 GHz
Dielectric withstanding voltage (at sea level)	1.5 kV, 50 Hz
Working voltage (at sea level) Unmated Mated	 ≤ 300 V rms, 50 Hz ≤ 500 V rms, 50 Hz
Insulation resistance	≥ 10^6 MΩ
Contact resistance • Centre contact • Outer contact	 ≤ 4 mΩ ≤ 2 mΩ
VSWR typical value for mated connector pair: 11_ QLA to 21_QLA	DC to 300 MHz = 1.15 300 MHz to 1.4 GHz = 1.20
RF leakage (measured at 500 MHz)	≥ 80 dB

Mechanical data	Requirements
Engagement force	typ. 2 N/0.45 lbs
Disengagement force	typ. 5 N/1.1 lbs
Contact captivation	≥ 20 N/4.5 lbs
Cable retention force [1]	see pages 32 – 41
Durability (matings)	≥ 10 000

Environmental data	Requirements
Temperature range	–55 to +150 °C/–67 to +302 °F
Thermal shock	MIL-STD-202, method 107, condition B
Moisture resistance	MIL-STD-202, method 106
Corrosion	saltspray test acc. to MIL-STD-202, method 101, condition B
Vibration	MIL-STD-202, method 204, condition D
Shock	MIL-STD-202, method 213, condition I

Material data		
Connector parts	Material	Plating
Bodies	brass, annealed	nickel
Pin contacts	brass, annealed	gold/SUCOPRO® gold plating
Socket contacts	copper-beryllium alloy	gold/SUCOPRO® gold plating
Crimp ferrules	copper	SUCOPLATE®
Insulators	PTFE or PFA	

Performance values are typical for the connector interface. Individual component or connector performance may vary depending on the connector design, attachment (e.g. cable, PCB) or application. For detailed specifications please refer to the specific data sheets on our website www.hubersuhner.com.

[1] Value considers maximum load of the cables without irreversible variations of specifications.

Series QLA 00 – cable connectors

Straight cable plugs (male)

For flexible cables
- HUBER+SUHNER full crimp

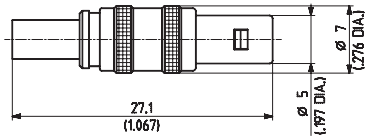



HUBER+SUHNER type	Item no.	Cable group (example)	Packaging	Assembly instruction	Crimp insert
11_QLA-01-1-8/122_NE	22641146	U1 (RG_178_B/U, ENVIROFLEX_178)	single	9007	1 A
11_QLA-01-2-8/122_NE 11_QLA-01-2-8/122_NH	22544043 22544042	U2 (RG_316_/U, ENVIROFLEX_316)	single bulk 100 pcs.		
11_QLA-01-2-9/122_NH	22648228	U4 (K_02252_D, ENVIROFLEX_316_D)	bulk 100 pcs.		
11_QLA-01-2-13/122_NH	22644547	U3 (G_01130_HT)	bulk 100 pcs.	27020	

For flexible cables
- HUBER+SUHNER full crimp

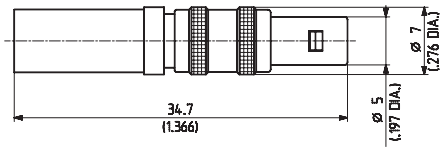



HUBER+SUHNER type	Item no.	Cable group (example)	Packaging	Assembly instruction	Crimp insert
11_QLA-01-3-1/122_NE	22641313	U7 (RG_58_C/U, ENVIROFLEX_B58)	single	3015	2 B
11_QLA-01-3-2/122_NE	22643326	U9 (RG_223_/U, ENVIROFLEX_B223)			

Cable groups see page 32 | Assembly tools see page 531 | Mounting holes/PCB layouts see page 561

L'IMPULSION
Retrouvez nous sur
www.limpulsion.fr

Series QLA 00 – cable connectors

Right angle cable plugs (male)

For flexible cables
- Cable entry crimp
- Centre contact soldered



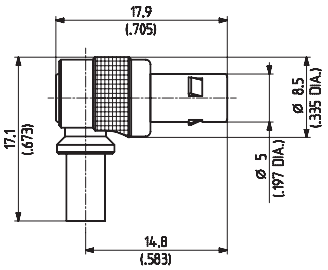

HUBER+SUHNER type	Item no.	Cable group (example)	Packaging	Assembly instruction	Crimp insert
16_QLA-01-2-1/122_NE	22640013	U2 (RG_316_/U, ENVIROFLEX_316)	single	3091	A
16_QLA-01-2-13/122_NE	22544279	U3 (G_01130_HT)			

Straight cable jack (female)

For flexible cables
- HUBER+SUHNER full crimp



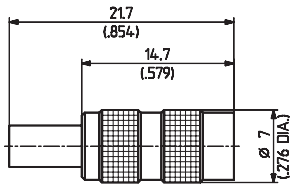

HUBER+SUHNER type	Item no.	Cable group (example)	Packaging	Assembly instruction	Crimp insert
21_QLA-01-2-5/112_NH	22652371	U2 (RG_316_/U, ENVIROFLEX_316)	bulk 100 pcs.	27158	1 A

Cable groups see page 32 | Assembly tools see page 531 | Mounting holes/PCB layouts see page 561

Series QLA 00 – cable connectors

Straight bulkhead cable jacks (female)

For flexible cables
- Cable entry crimp
- Centre contact soldered



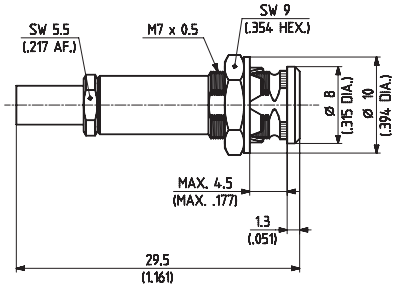

HUBER+SUHNER type	Item no.	Cable group (example)	Packaging	Assembly instruction	Mounting hole	Crimp insert
24_QLA-01-2-1/112_NE	22640026	U2 (RG_316_/U, ENVIROFLEX_316)	single	3089	ML 99	A

Series QLA 00 – receptacles with solder end

Receptacles, jacks (female)

- Bulkhead mounted



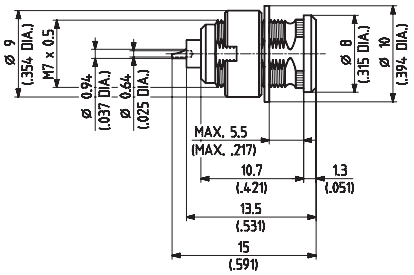

Fig. 1

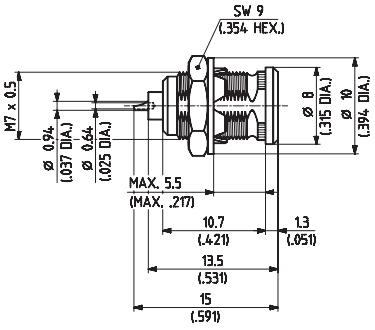

Fig. 2

HUBER+SUHNER type	Item no.	Packaging	Mounting hole	Fig.	Notes
22_QLA-01-0-1/112_NE 22_QLA-01-0-1/112_NH	22640023 22646308	single bulk 100 pcs.	ML 23	1	
22_QLA-01-0-2/112_NE	22640024	single	ML 99	2	counter sunk from rear

Cable groups see page 32 | Assembly tools see page 531 | Mounting holes/PCB layouts see page 561

Series QLA 00 – PCB connectors

Straight PCB jack (female)



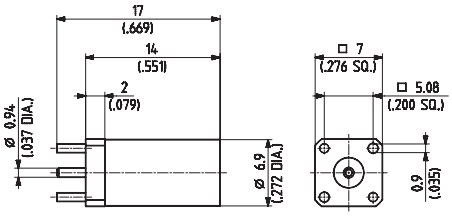

HUBER+SUHNER type	Item no.	Packaging	Mounting hole	Notes
82_QLA-01-0-2/112_NE	22543414	single	ML 97	without stand-off

Right angle PCB jacks (female)

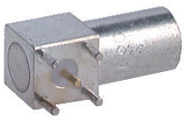

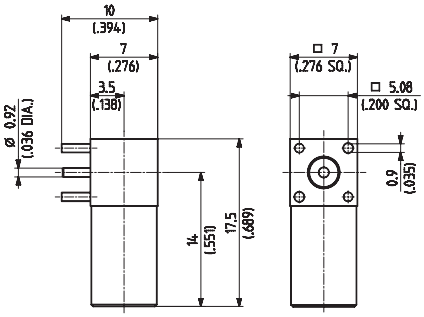

HUBER+SUHNER type	Item no.	Packaging	Mounting hole	Notes
85_QLA-01-0-2/112_NE	22640039	single	ML 97	without stand-off
85_QLA-01-0-2/110_NH	22646483	bulk 100 pcs.		

Cable groups see page 32 | Assembly tools see page 531 | Mounting holes/PCB layouts see page 561

L'IMPULSION
Retrouvez nous sur
www.limpulsion.fr

Series BMA – subminiature blind mate connectors

Description

HUBER+SUHNER BMA blind mate connectors open up special dimensions in microwave applications up to 18 GHz. HUBER+SUHNER offers a range of "floating" connector configurations with certain axial or radial misalignment taken out by the outer contact of the jacks.
The BMA series presents an outstanding range of products featuring high reliability and ease of assembly.

Compatibility

The HUBER+SUHNER range of BMA connectors is intermateable with the OSP connector series.

Content

Description	251
Compatibility	251
Interface dimensions in mm/inches	251
Technical data	252
BMA connector applications	253
Cable connectors	256
Receptacles with solder-in hermetic seal	259
Receptacles with solder end	260
PCB connectors	262

Interface dimensions (mm/inches)

Plug (male)

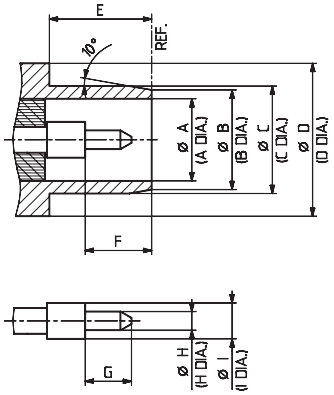

	Plug		Jack	
	min.	max.	min.	max.
A	4.09/0.161 nom		1.78/ 070 nom.	
B	4.88/0.192 nom.		4.09/ 161 nom.	
C	5.31/0.209	5.35/0.211	-	5.08/0.200
D	7.62/0.300 nom.		5.71/0.225	-
E	5.03/0.198	-	7.37/0.290	-
F	3.25/0.128	-	3.05/0.120	3.23/0.127
G	2.29/0.090 nom.		-	5.03/0.198
H	0.90/0.035	0.94/0.037		
I	1.78/0.070 nom.			

Jack (female), N50 variant

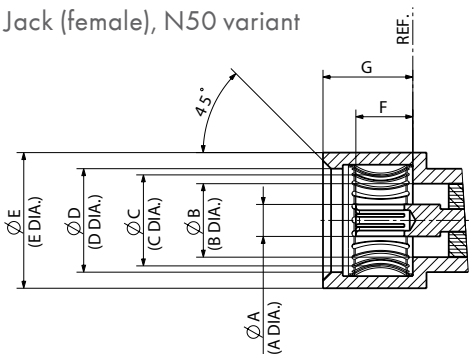

Interface dimensions conformable to the standards:

USA: MIL-STD-348/321

N50 variant is fully intermateable with MIL-STD-348/321.

L'IMPULSION Retrouvez nous sur www.limpulsion.fr

Series BMA – technical data

Electrical data	Requirements	
Cable type	0.086" semi-rigid	0.141" semi-rigid
Impedance	50 Ω	
Frequency range	DC to 18 GHz	
Dielectric withstanding voltage (at sea level)	1.0 kV rms, 50 Hz	1.5 kV rms, 50 Hz
Insulation resistance	≥ 5 • 10^3 MΩ	
Contact resistance • Centre contact • Outer contact	 ≤ 2 mΩ ≤ 2 mΩ	
RF-testing voltage (at sea level)	670 V rms, 5 MHz	1.0 kV rms, 5 MHz
Admissible power (at sea level and room temperature)	≤ 300 W at 3 GHz	

Mechanical data	Requirements
Engagement force	≤ 13.5 N
Disengagement force	≥ 2 N
Contact captivation	≥ 27 N/6.1 lbs
Cable retention force [1]	see pages 32 – 41
Durability (matings)	≥ 1000

Environmental data	Requirements
Temperature range	–65 to +125 °C/–85 to +257 °F
Thermal shock	MIL-STD-202, method 107, condition B
Moisture resistance	MIL-STD-202, method 106
Corrosion	saltspray test acc. to MIL-STD-202, method 101, condition B
Vibration	MIL-STD-202, method 204, condition D
Shock	MIL-STD-202, method 213, condition I

Material data		
Connector parts	Material	Plating
Bodies	copper beryllium alloy stainless steel	gold
Pin contacts	copper beryllium alloy	gold
Spring basket	copper beryllium alloy	gold
Springs (floating connectors)	stainless steel	
Insulators	PTFE or PFA	
Gaskets	EPDM, 40 shore A	

Performance values are typical for the connector interface. Individual component or connector performance may vary depending on the connector design, attachment (e.g. cable, PCB) or application. For detailed specifications please refer to the specific data sheets on our website www.hubersuhner.com.

[1] Value considers maximum load of the cables without irreversible variations of specifications.

L'IMPULSION
Retrouvez nous sur
www.limpulsion.fr

Series BMA – connector applications

Quick and reliable engagement and disengagement of multiple microwave transmission lines, high packaging density of flexible coaxial lines and cable free connection of modules to motherboard are some needs of modern microwave systems.

HUBER+SUHNER BMA connectors offer an economical solution for the most demanding interconnector applications found today in civil and military microwave circuits. To help ensure a problem free, reliable long term operation the following guidelines should be used.

Assembly hints

Radial and axial misalignments can be accomodated with the spring outer contacts of the HUBER+SUHNER BMA connector. These misalignments are due to the build-up of tolerances with the major contributions coming from: axial direction, mounting plate distances and plate distortions. Radial direction: mounting hole positions and concentricity, plate distortion and misalignment. For recommended mounting hole sizes see page 561p.

Hole disposition

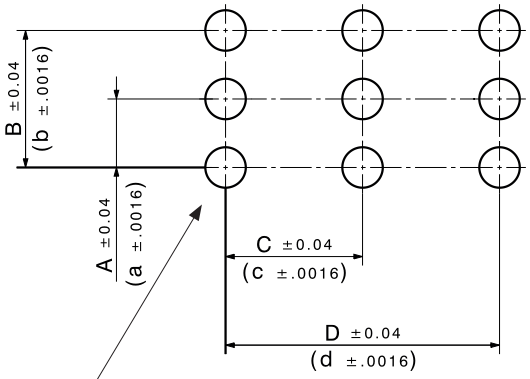

• origin, single datum point

To avoid tolerances build-up all mounting holes shall be toleranced from a single datum point.

It is also important that both of the mounting plates are properly afficed and correctly positioned.

[1] For applications with reduced return loss specifications 0.76 mm/0.030 in. is allowable.

L'IMPULSION
Retrouvez nous sur
www.limpulsion.fr

Series BMA – connector applications

Float mounting (example)

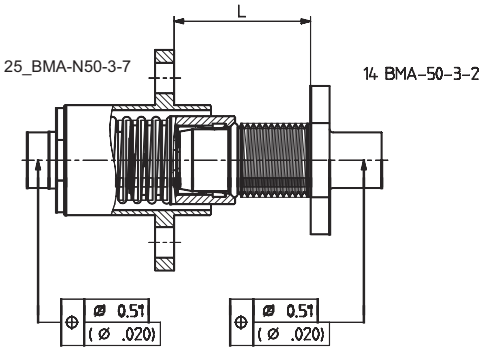

The increased tolerance correction of the connector is achieved by using an extra spring system.

This allows the centre assembly of the connector to move freely within the flange body.

Recommended maximum tolerances:
Axial: 1.52 mm/0.060 in.
Radial: 0.51 mm/0.020 in.

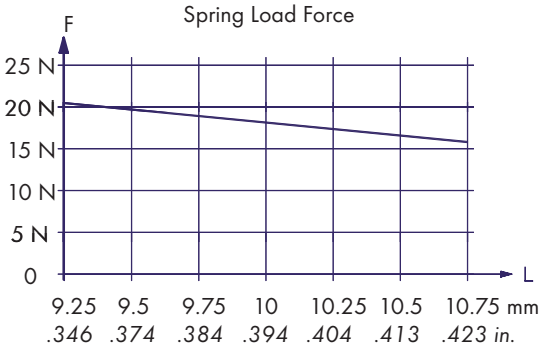

The adjacent diagram shows the relationship between the connector preloading force and the separation distance "L" between the mounting reference planes for a typical connector pair (25_BMA-N50-3-7 and 14 BMA-50-3-2).

To ensure optimum contact under extreme radial misalignment the following points must be considered:

A:
The maximum misalignment tolerances shall not be exceeded. Any possible bending of the mounting plate due to the spring preloading of the individual connectors shall be taken into account. If distortion occurs, the following steps should be taken to minimise the effect:

- Re-dimensioning,
- Bracing of the mounting plate,
- Reduction of maximum connector preloading force which will result in the limitation of length L.

B:
A minimum preloading force of 16 N shall be ensured for each connector pair so that the maximum engaging force will be exceeded. This represents the upper limit of separation.
For the example above this is a length L of maximum 10.65 mm/0.419 in.

Data on other connector combinations available on request.
For the dimensioning of the holes the same points must be considered as for the rigid mounting.

Series BMA – connector applications

Mounting plate bending

For an array of BMA connectors to be mounted on a chassis, the forces on the connectors must be taken into account and in the case of a floating assembly the preloading forces must be considered.

For a simplified calculation the mounting plate can be considered as a beam under deflection, thus the bending is:

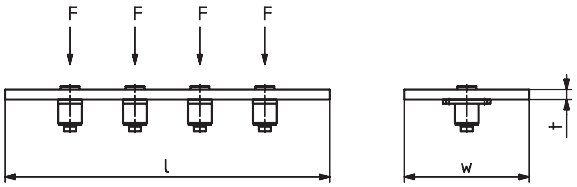

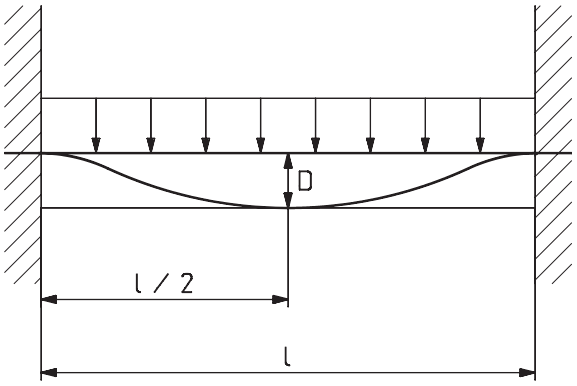

Legend:

D deflection = $\frac{n \cdot F \cdot l^3}{384 E \cdot I}$

E modulus of elasticity
aluminium: E = 70 000 N/mm²
steel: E = 210 000 N/mm

F preloading force

I moment of beam = $\frac{w \cdot t^3}{12}$

l length of panel

n number of connectors

t thickness of panel

w width of panel

Example:

4 connectors of type 25_BMA-N50-3-7 (preloading force F = 20 N each):
E = 70 000 N/mm² (aluminium chassis)
thickness of panel (t) 2 mm
width of panel (w) 20 mm
length of panel (l) 80 mm

$$I = \frac{20mm \cdot (2mm)^3}{12} = 13.33mm^4$$

$$D = \frac{4 \cdot 20N \cdot (80mm)^3}{384 \cdot 70'000 \frac{N}{mm^2} \cdot 13.33mm^4} = 0.11mm$$

L'IMPULSION Retrouvez nous sur www.limpulsion.fr

Series BMA – cable connectors

Straight bulkhead cable plugs (male)

For semi-rigid cables

- Cable entry soldered
- Bulkhead mounted, rigid
- Body material: CuBe, gold plated



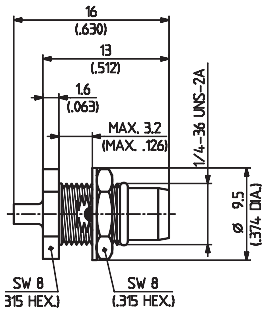

Fig. 1

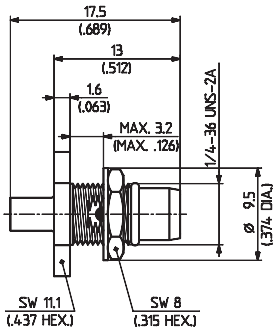

Fig. 2

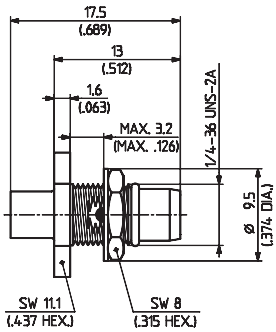

Fig. 3

HUBER+SUHNER type	Item no.	Cable group (example)	Packaging	Assembly instruction	Mounting hole	Fig.
14_BMA-50-1-15/111_NE	22646663	Y2, Y15 (EZ_47)	single	27180	ML 56	1
14_BMA-50-2-2/111_NE	22645600	Y3, Y11, Y16 (EZ_86)		9171		2
14_BMA-50-3-2/111_NE	22645601	Y5, Y12, Y17 (EZ_141)		9171		3

For flexible cables

- Cable entry crimp
- Bulkhead mounted, rigid
- Body material: stainless steel



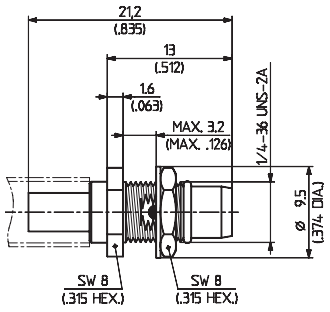

Fig. 1

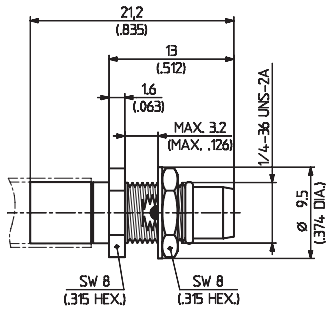

Fig. 2

HUBER+SUHNER type	Item no.	Cable group (example)	Packaging	Assembly instruction	Mounting hole	Crimp insert	Fig.
14_BMA-50-2-3/199_NE	22645614	U2 (RG_316_/U, ENVIROFLEX_316)	single	9172	ML 56	A [1]	1
14_BMA-50-3-3/199_NE	22645615	U9, U11 (RG_400_/U, ENVIROFLEX_400)		9173		B [2]	2

[1] MIL insert M22520/5-03A can also be used
[2] MIL insert M22520/5-05A can also be used

Cable groups see page 32 | Assembly tools see page 531 | Mounting holes/PCB layouts see page 561

L'IMPULSION | Retrouvez nous sur www.limpulsion.fr

Series BMA – cable connectors

Straight panel cable plug (male)

For semi-rigid cables
- Cable entry soldered
- 2-hole mounted
- Body material: CuBe, gold plated

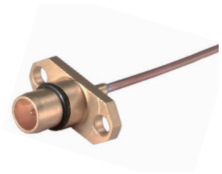

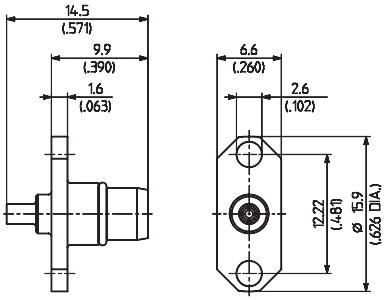

HUBER+SUHNER type	Item no.	Cable group (example)	Packaging	Assembly instruction
15_BMA-50-1-15/111_NE	22649704	Y2, Y15 (EZ_47)	single	27180

Straight bulkhead cable jacks (female)

For semi-rigid cables
- Cable entry soldered
- Snap-in, floating
- Body material: CuBe, gold plated



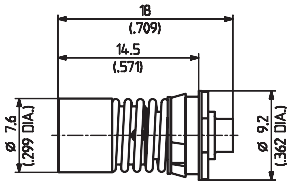

Fig. 1

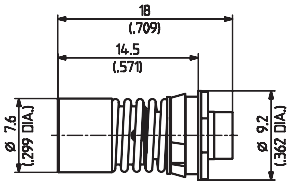

Fig. 2

Connector fixed into mounting panel with snap-in mechanism. Recommended removal tool: 74_Z-0-0-213

HUBER+SUHNER type	Item no.	Cable group (example)	Packaging	Assembly instruction	Mounting hole	Fig.
24_BMA-N50-2-20/111_NE	84097552	Y3, Y11, Y16 (EZ_86)	single	0000230377	ML 66	1
24_BMA-N50-3-18/111_NE	85018694	Y5, Y12, Y17 (EZ_141)		0000453501		2

It is recommended to use a service loop to facilitate the float features of the connector.

Cable groups see page 32 | Assembly tools see page 531 | Mounting holes/PCB layouts see page 561

L'IMPULSION
Retrouvez nous sur
www.limpulsion.fr

Series BMA – cable connectors

Straight bulkhead cable jacks (female)

For flexible cables

- Cable entry crimp
- Snap-in, floating
- Body material: stainless steel



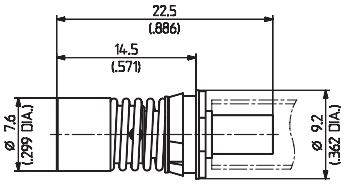

Fig. 1

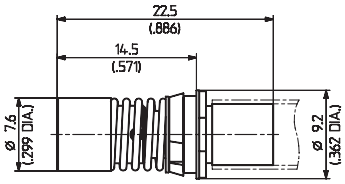

Fig. 2

HUBER+SUHNER type	Item no.	Cable group (example)	Packaging	Assembly instruction	Mounting hole	Crimp insert	Fig.
24_BMA-N50-2-21/119_NE	85018763	U2 (RG_316_/U, ENVIROFLEX_316)	single	0000453588	ML 66	A	1
24_BMA-N50-3-19/119_NE	85018796	U9, U11 (RG_400_/U, ENVIROFLEX_400)		9173		B	2

Recommended removal tool 74_Z-0-0-213 for receptacles with snap-in mechanism.

Straight panel cable jacks (female)

For semi-rigid cables

- Cable entry soldered
- Flange mount, floating



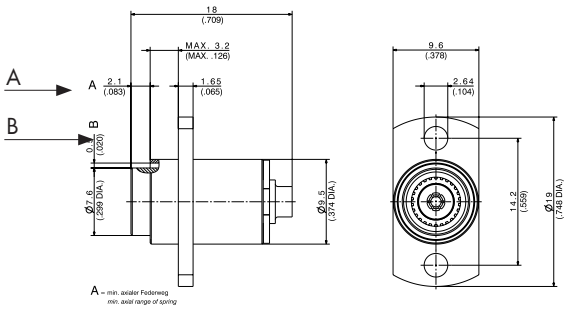

Fig. 1

A = min. 2.1 mm/0.083 in. axial range of spring
B = min. 0.5 mm/0.020 in. radial misalignment

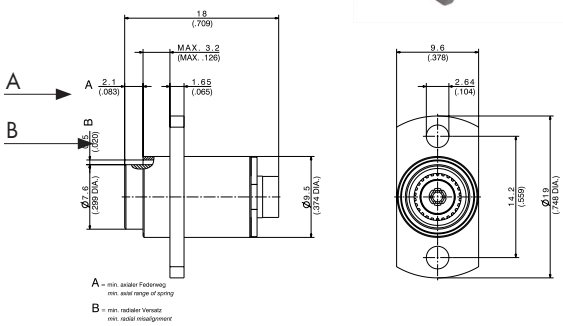

Fig. 2

Outer connector body and flange of stainless steel, inner floating part of gold plated CuBe

HUBER+SUHNER type	Item no.	Cable group (example)	Packaging	Assembly instruction	Mounting hole	Fig.
25_BMA-N50-2-13/119_NE	84145709	Y3, Y11, Y16 (EZ_86)	single	0000230377	ML 58	1
25_BMA-N50-3-7/119_NE	85018698	Y5, Y12, Y17 (EZ_141)		0000453517		2

It is recommended to use a service loop to facilitate the float features of the connector.

Cable groups see page 32 | Assembly tools see page 531 | Mounting holes/PCB layouts see page 561

L'IMPULSION | Retrouvez nous sur www.limpulsion.fr

Series BMA – cable connectors

Straight panel cable jacks (female)

For flexible cables
- Cable entry crimp
- Flange mount, floating



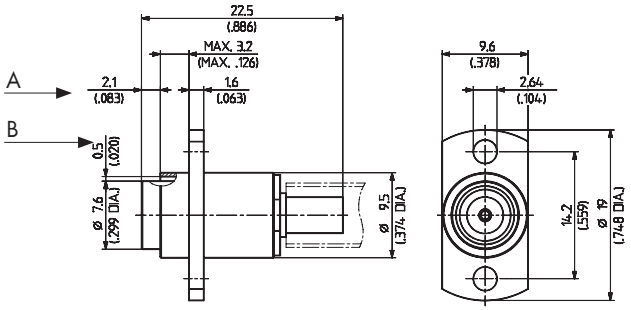

Fig. 1

A = min. 2.1 mm/0.083 in. axial range of spring
B = min. 0.5 mm/0.020 in. radial misalignment

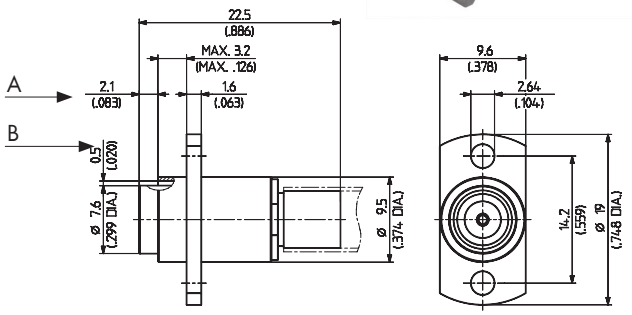

Fig. 2

Outer connector body and flange of stainless steel, inner floating part of gold plated CuBe

HUBER+SUHNER type	Item no.	Cable group (example)	Packaging	Assembly instruction	Mounting hole	Crimp insert	Fig.
25_BMA-N50-2-14/119_NE	85018785	U2 (RG_316_/U, ENVIROFLEX_316)	single	0000291185	ML 58	A	1
25_BMA-N50-3-8/119_NE	85018791	U9, U11 (RG_400_/U, ENVIROFLEX_400)		9173		B	2

Series BMA – receptacles with solder-in hermetic seal

Receptacle, plug (male)

- Bulkhead mounted
- Threaded installation
- Body material: stainless steel



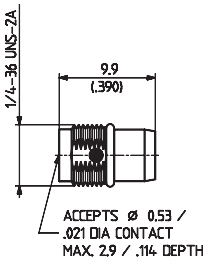

HUBER+SUHNER type	Item no.	Packaging	Mounting hole	Suitable glass-bead
12_BMA-50-0-3/199_NE	22645636	single	ML 61	73_Z-0-0-198 [1]

For mounting: recommended tool: collet chuck and torque wrench from Radiall R282.340.000, diam. 5.3 mm, 280 Ncm.
For fixing hermetic seal while soldering, fixture 74_Z-0-0-211 is recommended.

[1] See page 559

Cable groups see page 32 | Assembly tools see page 531 | Mounting holes/PCB layouts see page 561

L'IMPULSION
Retrouvez nous sur
www.limpulsion.fr

Series BMA – receptacles with solder end

Receptacles, plugs (male)

- Panel mounted
- Body material: stainless steel



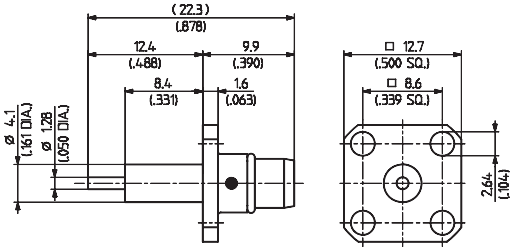

HUBER+SUHNER type	Item no.	Packaging	Flange type	Notes
13_BMA-50-0-1/199_NE	22645622	single	square	with extended dielectric

- Panel mounted
- Body material: stainless steel



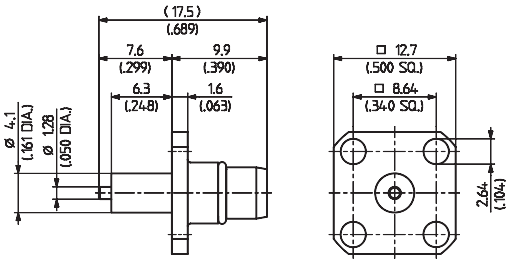

HUBER+SUHNER type	Item no.	Packaging	Flange type	Notes
13_BMA-50-0-13/199_NE	22660107	single	square	with extended dielectric

Cable groups see page 32 | Assembly tools see page 531 | Mounting holes/PCB layouts see page 561

L'IMPULSION
Retrouvez nous sur
www.limpulsion.fr

Series BMA – receptacles with solder end

Receptacle, plug (male)

- Panel mounted
- Body material: stainless steel



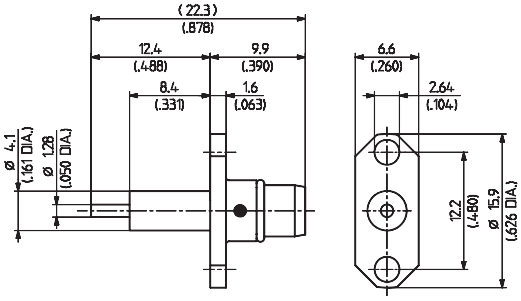

HUBER+SUHNER type	Item no.	Packaging	Flange type	Notes
13_BMA-50-0-2/199_NE	22645623	single	2-hole	with extended dielectric

Receptacles, jack (female)

- Panel mounted
- Body material: stainless steel



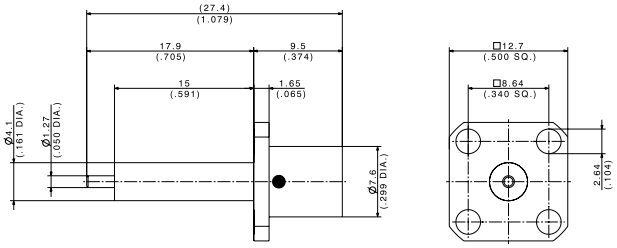

HUBER+SUHNER type	Item no.	Packaging	Flange type	Notes
23_BMA-N50-0-16/119_NE	85079352	single	square	with extended dielectric

Cable groups see page 32 | Assembly tools see page 531 | Mounting holes/PCB layouts see page 561

L'IMPULSION
Retrouvez nous sur
www.limpulsion.fr

Series BMA – PCB connectors

Straight PCB plug (male)

- Body material: CuBe, gold plated

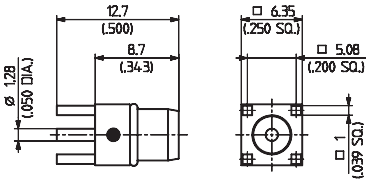



HUBER+SUHNER type	Item no.	Packaging	Flange type
81_BMA-50-0-1/111_NE	22645630	single	ML 41

Cable groups see page 32 | Assembly tools see page 531 | Mounting holes/PCB layouts see page 561

L'IMPULSION | Retrouvez nous sur www.limpulsion.fr

Series QMA – subminiature connectors

Description

HUBER+SUHNER QMA coaxial connectors are according to QLF standard and available with 50 Ω impedance. The frequency range extends to 18 GHz, depending on the connector and cable type. However most of the QMA connectors are return loss optimised for frequencies up to 6 GHz. The interface is based on the SMA dimension but instead of a threaded coupling mechanism a new snap-lock mechanism is used.

The QMA interface has a very similar performance to the SMA, but in addition it offers an easier, faster and safer coupling operation, helping customers to save significantly time during production. The packaging density of QMA is increased compared to SMA connectors thanks to the fact that no torque spanner is required to fasten the coupling nut.
QMA is not intermateable with SMA.
QMA connectors are also available as waterproof version (IP68) and are compatible with QLF standard.

Content

Description	263
Interface dimensions in mm/inches	263
Features	263
Technical data	264
Cable connectors	266
Receptacles	275
PCB connectors	277
Protection caps	279
QMA eXtreme – XQMA	280
Calibration	281

Interface dimensions (mm/inches)

Plug (male)

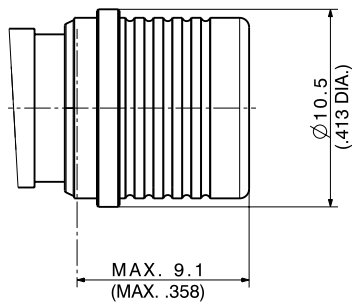

Jack (female)

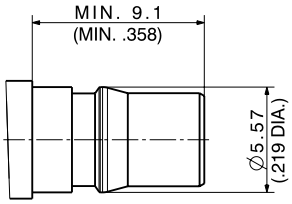

Features

- Easy to mate
- 10 times faster than with threaded SMA
- Increased reliability
- No torque or tooling required
- 360° rotatable interface
- Easy routing of cable assembly without mechanical stress or electrical performance degradation
- Higher packing density
- Size equivalent to SMA, but space saving as there is no need for wrench clearance
- Excellent electrical performance
- Consistent VSWR performance enables to replace standard SMA
- Return loss optimised DC to 6 GHz

QLF® Quick Lock Formula www.qlf.info

L'IMPULSION Retrouvez nous sur www.limpulsion.fr

Series QMA – technical data

Electrical data	Requirements
Impedance	50 Ω
Frequency range	DC to 18 GHz
Dielectric withstanding voltage (at sea level)	1000 V rms, 50 Hz
Working voltage (at sea level)	480 V rms, 50 Hz
Insulation resistance	≥ 5 • 10^3 MΩ
Contact resistance • Centre contact • Outer contact	 ≤ 3.0 mΩ max. (initial) ≤ 2.5 mΩ max. (initial)
Passive intermodulation	–120 dBc static at 1.8 GHz, 2 × 20 W
Screening effectiveness • DC to 3 GHz • 3 to 6 GHz	 –80 dB min. –70 dB min.
Return loss (typical) • DC to 3 GHz • 3 to 6 GHz	 ≥ 32 dB ≥ 25 dB

Mechanical data	Requirements
Mating characteristics • Engagement force • Disengagement force	 25 N typical 20 N typical
Interface retention force	60 N min.
Durability	100 mating cyles min.
Connector pitch	12.4 mm min center to center

Environmental data	Test conditions for standard QMA
Temperature range	–40 to +85 °C
Thermal shock	IEC 60169-1 16.4 (–40 to +85 °C)
Corrosion	IEC 60169-1 16.7 (48 hrs)
Damp heat	IEC 60169-1 16.3 (96 hrs) steady state
Vibration	IEC 60068-2-64 random 5 to 20 Hz: 1.29 $(m/s^2)^2$ /Hz 20 to 500 Hz: –3 dB/octave

Environmental data	Test conditions for waterproof QMA
Temperature range	–40 to +105 °C
Thermal shock	MIL-STD-202, method 107, condition B
Corrosion	MIL-STD-202, method 101, condition B
Damp heat	MIL-STD-202, method 106 F
Vibration	MIL-STD-202, method 204, condition D
Ingress protection	IP68 IEC 60529, mated condition

Performance values are typical for the connector interface. Individual component or connector performance may vary depending on the connector design, attachment (e.g. cable, PCB) or application. For detailed specifications please refer to the specific data sheets on our website www.hubersuhner.com.

L'IMPULSION | Retrouvez nous sur www.limpulsion.fr

Series QMA – technical data

Material data		
Connector parts	Material	Plating
Bodies, outer contact	brass/spring bronze	SUCOPLATE®/SUCOPRO® gold plating
Pin contacts	brass	SUCOPRO® gold plating
Socket contacts	spring bronze/copper-beryllium alloy	SUCOPRO® gold plating
Insulators	PTFE or PFA	
Crimp ferrules	copper	SUCOPLATE®
Gaskets	silicone rubber	

Performance values are typical for the connector interface. Individual component or connector performance may vary depending on the connector design, attachment (e.g. cable, PCB) or application. For detailed specifications please refer to the specific data sheets on our website www.hubersuhner.com.

L'IMPULSION Retrouvez nous sur www.limpulsion.fr

Series QMA – cable connectors

Straight cable plugs (male)

For semi-rigid, Sucoform and Multiflex cables
- Cable entry soldered
- Centre contact plugged-in

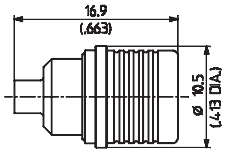



HUBER+SUHNER type	Item no.	Cable group (example)	Packaging	Assembly instruction
11_QMA-50-2-3/133_NE 11_QMA-50-2-3/133_NH	23017704 23017705	Y3, Y11, Y16 (SUCOFORM_86, EZ_86)	single bulk 100 pcs.	27428

For semi-rigid, Sucoform and Multiflex cables
- Cable entry soldered
- Centre contact plugged-in

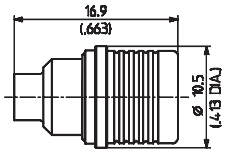



HUBER+SUHNER type	Item no.	Cable group (example)	Packaging	Assembly instruction	Notes
11_QMA-50-3-3/133_NE 11_QMA-50-3-3/133_NH	23017695 23017696	Y5, Y12, Y17 (SUCOFORM_141), EZ_141	single bulk 100 pcs.	27428	body: SUCOPRO® gold plating

Cable groups see page 32 | Assembly tools see page 531 | Mounting holes/PCB layouts see page 561

L'IMPULSION
Retrouvez nous sur
www.limpulsion.fr

Series QMA – cable connectors

Straight cable plugs (male)

For semi-rigid, Sucoform and Multiflex cables
- Waterproof
- Cable entry soldered
- Centre contact plugged or soldered



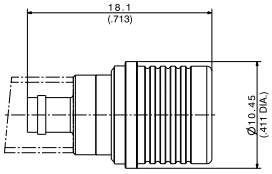

Fig. 1

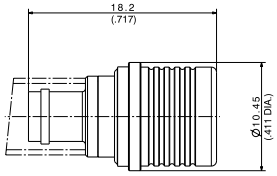

Fig. 2

HUBER+SUHNER type	Item no.	Cable group (example)	Packaging	Assembly instruction	Fig.	Notes
11_QMA-W50-2-6/113_NH	84068215	Y3, Y11, Y16 (SUCOFORM_86, EZ_86)	bulk 100 pcs.	0000263508	1	
11_QMA-W50-3-7/113_NE 11_QMA-W50-3-7/113_NH	84075868 84068217	Y5, Y12, Y17 (SUCOFORM_141, EZ_141)	single bulk 100 pcs.	0000263762	2	

For flexible cables
- HUBER+SUHNER full crimp



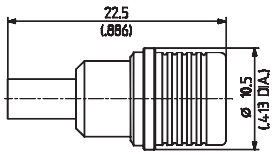

HUBER+SUHNER type	Item no.	Cable group (example)	Packaging	Assembly instruction	Crimp insert
11_QMA-50-2-1/133_NE 11_QMA-50-2-1/133_NH	23017700 23017701	U4 (K_02252_D, ENVIROFLEX_316_D)	single bulk 100 pcs.	27427	1 A
11_QMA-50-2-2/133_NE 11_QMA-50-2-2/133_NH	23017720 23017721	U2 (RG_316_/U, ENVIROFLEX_316)	single bulk 100 pcs.		

Cable groups see page 32 | Assembly tools see page 531 | Mounting holes/PCB layouts see page 561

L'IMPULSION
Retrouvez nous sur
www.limpulsion.fr

Series QMA – cable connectors

Straight cable plugs (male)

For flexible cables

- Cable entry crimp
- Centre contact plugged or soldered

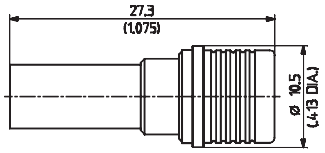

Fig. 1

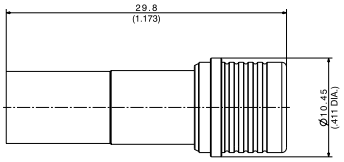

Fig. 2



HUBER+SUHNER type	Item no.	Cable group (example)	Packaging	Assembly instruction	Crimp insert	Fig.
11_QMA-50-3-1/133_NE 11_QMA-50-3-1/133_NH	23017697 23017698	U9, U11 (RG_400_/U, ENVIROFLEX_400)	single bulk 100 pcs.	27429	B	1
11_QMA-50-3-2/133_NE 11_QMA-50-3-2/133_NH	23017702 23017703	U7 (RG_58_C/U, ENVIROFLEX_B58)	single bulk 100 pcs.			
11_QMA-50-4-2/133_NH	84000234	S16, X9, X28 (SX_04172_B-60, SPUMA_240, SPUMA_240-FR-01)	bulk 100 pcs.	0000231592	C	2

For flexible cables

- Waterproof
- Cable entry crimp
- Centre contact plugged or soldered

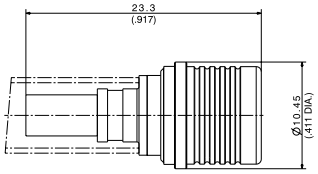

Fig. 1

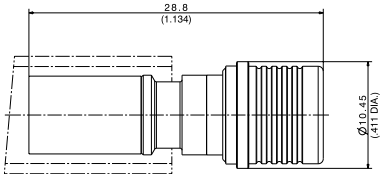

Fig. 2



HUBER+SUHNER type	Item no.	Cable group (example)	Packaging	Assembly instruction	Crimp insert	Fig.
11_QMA-W50-2-8/133_NH	84104479	U2 (RG_316 _/U, ENVIROFLEX_316)	bulk 100 pcs.	0000312675	A	1
11_QMA-W50-4-3/133_NE 11_QMA-W50-4-3/133_NH	84075865 84023153	S16, X9, X28, X34 (SX_04172_B-60, SPUMA_240, SPUMA_240-FR-01, SPUMA_240-RS-FR)	single bulk 100 pcs.	0000239799	C	2

Cable groups see page 32 | Assembly tools see page 531 | Mounting holes/PCB layouts see page 561

L'IMPULSION | Retrouvez nous sur www.limpulsion.fr

Series QMA – cable connectors

Right angle cable plugs (male)

For semi-rigid, Sucoform and Multiflex cables
- Cable entry soldered
- Centre contact soldered

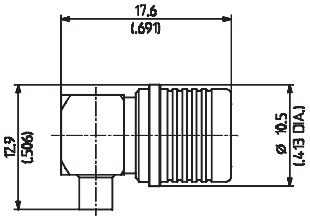



HUBER+SUHNER type	Item no.	Cable group (example)	Packaging	Assembly instruction
16_QMA-50-2-3/133_NE 16_QMA-50-2-3/133_NH	23017666 23017667	Y3, Y11, Y16 (SUCOFORM_86, EZ_86)	single bulk 100 pcs.	27444

For semi-rigid, Sucoform and Multiflex cables
- Cable entry soldered
- Centre contact soldered

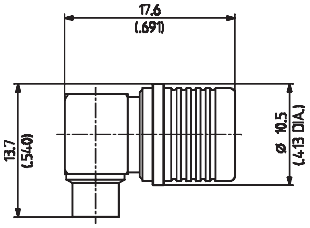



HUBER+SUHNER type	Item no.	Cable group (example)	Packaging	Assembly instruction
16_QMA-50-3-3/133_NE 16_QMA-50-3-3/133_NH	23017693 23017694	Y5, Y12, Y17 (SUCOFORM_141, EZ_141)	single bulk 100 pcs.	27444

Cable groups see page 32 | Assembly tools see page 531 | Mounting holes/PCB layouts see page 561

L'IMPULSION
Retrouvez nous sur
www.limpulsion.fr

Series QMA – cable connectors

Right angle cable plugs (male)

For semi-rigid, Sucoform and Multiflex cables
- Waterproof
- Cable entry soldered
- Centre contact soldered



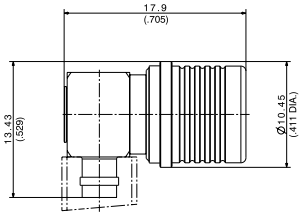

Fig. 1

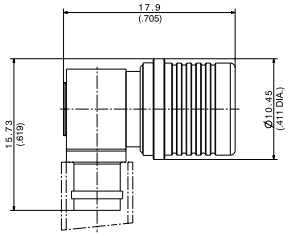

Fig. 2

HUBER+SUHNER type	Item no.	Cable group (example)	Packaging	Assembly instruction	Fig.	Notes
16_QMA-W50-2-9/113_NE 16_QMA-W50-2-9/113_NH	84068219 84075867	Y3, Y11, Y16 (SUCOFORM_86)	single bulk 100 pcs.	0000263789	1	body: SUCOPRO® gold plating
16_QMA-W50-3-5/113_NE	84075863	Y5, Y12, Y17 (SUCOFORM_141)	single	0000263850	2	body: SUCOPRO® gold plating

For flexible cables
- Cable entry crimp
- Centre contact soldered



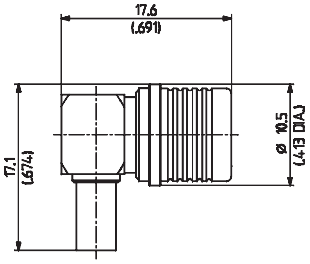

HUBER+SUHNER type	Item no.	Cable group (example)	Packaging	Assembly instruction	Crimp insert
16_QMA-50-2-1/133_NE 16_QMA-50-2-1/133_NH	23017654 23017644	U4 (K_02252_D, ENVIROFLEX_316_D)	single bulk 100 pcs.	27443	A
16_QMA-50-2-2/133_NE 16_QMA-50-2-2/133_NH	23017657 23017658	U2 (RG_316_/U, ENVIROFLEX_316)	single bulk 100 pcs.		

Cable groups see page 32 | Assembly tools see page 531 | Mounting holes/PCB layouts see page 561

Series QMA – cable connectors

Right angle cable plugs (male)

For flexible cables
- Cable entry crimp
- Centre contact soldered

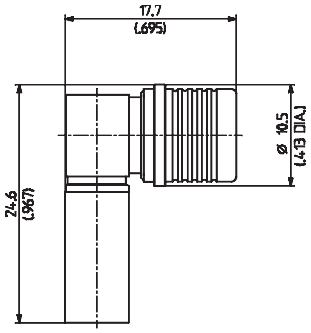



HUBER+SUHNER type	Item no.	Cable group (example)	Packaging	Assembly instruction	Crimp insert
16_QMA-50-3-1/133_NE 16_QMA-50-3-1/133_NH	23017686 23017687	U9, U11, U39 (RG_400_/U, ENVIROFLEX_400)	single bulk 100 pcs.	27443	B
16_QMA-50-3-2/133_NE 16_QMA-50-3-2/133_NH	23017691 23017692	U7 (RG_58_C/U, ENVIROFLEX_B58)	single bulk 100 pcs.		

For flexible cables
- Cable entry crimp
- Centre contact soldered

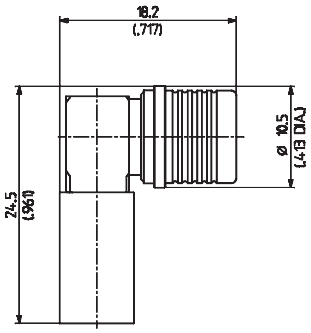



HUBER+SUHNER type	Item no.	Cable group (example)	Packaging	Assembly instruction	Crimp insert
16_QMA-50-4-1/133_NH	23012849	S16 (SX_04172_B-60)	bulk 100 pcs.	27405	C

Cable groups see page 32 | Assembly tools see page 531 | Mounting holes/PCB layouts see page 561

L'IMPULSION
Retrouvez nous sur
www.limpulsion.fr

Series QMA – cable connectors

Right angle cable plugs (male)

For flexible cables
- Waterproof
- Cable entry crimp
- Centre contact soldered



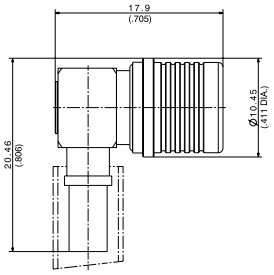

Fig. 1

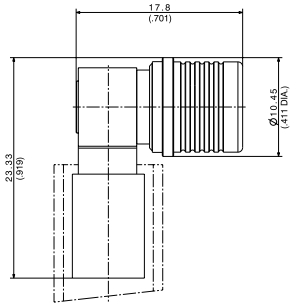

Fig. 2

HUBER+SUHNER type	Item no.	Cable group (example)	Packaging	Assembly instruction	Crimp insert	Fig.
16_QMA-W50-2-10/133_NH	84104679	U2 (RG_316_/U, ENVIROFLEX_316)	bulk 100 pcs.	0000312747	A	1
16_QMA-W50-4-5/133_NE 16_QMA-W50-4-5/133_NH	84075864 84023140	X9, X28, X34 (SX_04172_B-60, SPUMA_240, SPUMA_240-FR-01, SPUMA_240-RS-FR)	single bulk 100 pcs.	0000241978	C	2

Straight bulkhead cable jacks (female)

For semi-rigid, Sucoform and Multiflex cables
- Cable entry soldered
- Centre contact plugged-in
- With panel seal

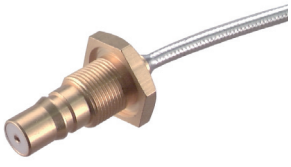

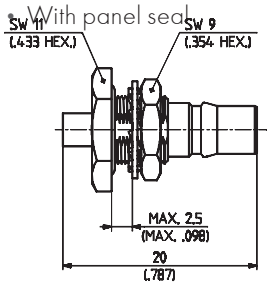

HUBER+SUHNER type	Item no.	Cable group (example)	Packaging	Assembly instruction	Mounting hole
24_QMA-50-2-1/111_NE 24_QMA-50-2-1/111_NH	23017742 23017743	Y3, Y11, Y16 (SUCOFORM_86, EZ_86)	single bulk 100 pcs.	27428	ML 20

Cable groups see page 32 | Assembly tools see page 531 | Mounting holes/PCB layouts see page 561

Series QMA – cable connectors

Straight bulkhead cable jacks (female)

For semi-rigid, Sucoform and Multiflex cables
- Cable entry soldered
- Centre contact plugged-in
- With panel seal



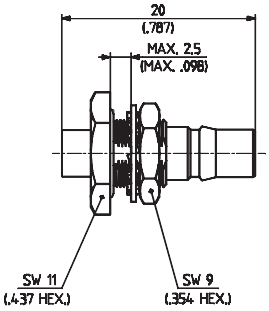

HUBER+SUHNER type	Item no.	Cable group (example)	Packaging	Assembly instruction	Mounting hole
24_QMA-50-3-3/111_NE 24_QMA-50-3-3/111_NH	23017683 23017684	Y5, Y12, Y17 (SUCOFORM_141, EZ_141)	single bulk 100 pcs.	27428	ML 20

For flexible cables
- Cable entry crimp
- Centre contact soldered
- With panel seal



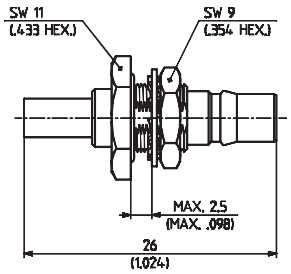

HUBER+SUHNER type	Item no.	Cable group (example)	Packaging	Assembly instruction	Mounting hole	Crimp insert
24_QMA-50-2-2/133_NE 24_QMA-50-2-2/133_NH	23017829 23017830	U4 (K_02252_D, ENVIROFLEX_316_D)	single bulk 100 pcs.	27429	ML 20	A
24_QMA-50-2-3/133_NE 24_QMA-50-2-3/133_NH	23017837 23017838	U2 (RG_316_/U, ENVIROFLEX_316)	single bulk 100 pcs.			

Cable groups see page 32 | Assembly tools see page 531 | Mounting holes/PCB layouts see page 561

L'IMPULSION
Retrouvez nous sur
www.limpulsion.fr

Series QMA – cable connectors

Straight bulkhead cable jacks (female)

For flexible cables
- Cable entry crimp
- Centre contact soldered
- With panel seal



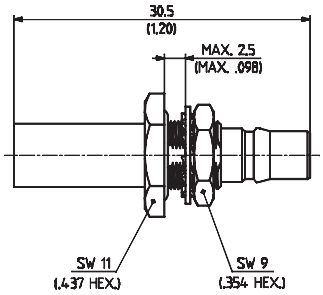

HUBER+SUHNER type	Item no.	Cable group (example)	Packaging	Assembly instruction	Mounting hole	Crimp insert
24_QMA-50-3-1/133_NE 24_QMA-50-3-1/133_NH	23017822 23017823	U9, 11 (RG_400_/U, ENVIROFLEX_400)	single bulk 100 pcs.	27429	ML 20	B
24_QMA-50-3-2/133_NE 24_QMA-50-3-2/133_NH	23017795 23017796	U7 (RG_58_C/U, ENVIROFLEX_B58)	single bulk 100 pcs.			

Cable groups see page 32 | Assembly tools see page 531 | Mounting holes/PCB layouts see page 561

L'IMPULSION
Retrouvez nous sur
www.limpulsion.fr

Series QMA – receptacles

Straight bulkhead receptacles, jacks (female)

- Coaxial end
- Press-in chassis mount



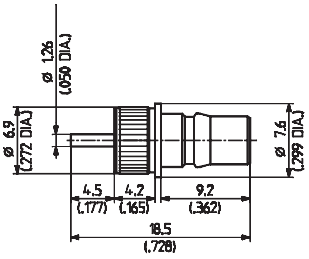

HUBER+SUHNER type	Item no.	Packaging	Mounting hole	Notes
22_QMA-50-0-7/133_NF	84001926	bulk 50 pcs.	ML 143	press-in

- Coaxial end
- Screw-in chassis mount



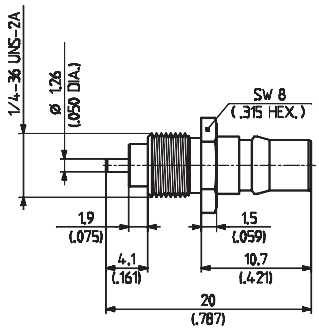

Fig. 1

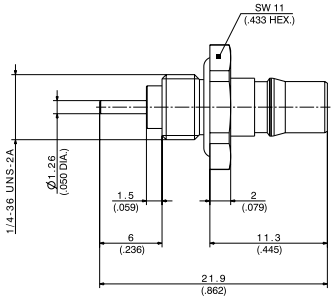

Fig. 2

HUBER+SUHNER type	Item no.	Packaging	Fig.	Notes
22_QMA-50-0-4/133_NH	23022628	bulk 100 pcs.	1	extended dielectric, without panel seal
22_QMA-50-0-34/133_NH	84061333		2	extended dielectric, with panel seal

Cable groups see page 32 | Assembly tools see page 531 | Mounting holes/PCB layouts see page 561

L'IMPULSION
Retrouvez nous sur
www.limpulsion.fr

Series QMA – receptacles

Straight panel receptacle, jack (female)

- 2-hole flange
- Without panel seal
- With coaxial end



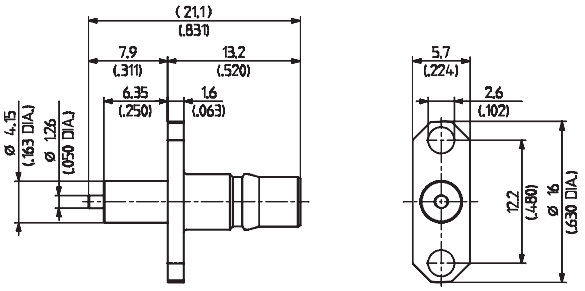

HUBER+SUHNER type	Item no.	Packaging	Notes
23_QMA-50-0-2/111_NH	23024985	bulk 100 pcs.	extended dielectric

- 4-hole flange
- Without panel seal
- With coaxial end



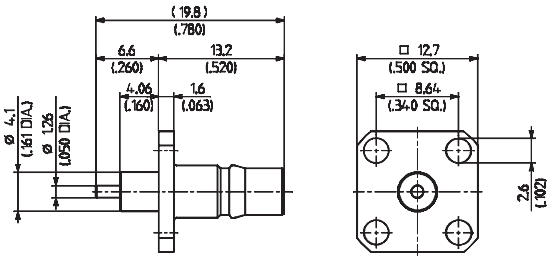

HUBER+SUHNER type	Item no.	Packaging	Notes
23_QMA-50-0-3/111_NH	23025007	bulk 100 pcs.	extended dielectric

Cable groups see page 32 | Assembly tools see page 531 | Mounting holes/PCB layouts see page 561

L'IMPULSION | Retrouvez nous sur www.limpulsion.fr

Series QMA – PCB connectors

Straight PCB jacks (female)

- With stand-off

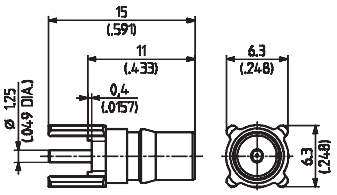



HUBER+SUHNER type	Item no.	Packaging	PCB layout
82_QMA-50-0-3/111_NH	23017656	bulk 100 pcs.	ML 41

- Surface mount type SMT

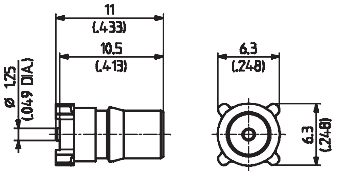



HUBER+SUHNER type	Item no.	Packaging	PCB layout
82_QMA-S50-0-2/111_NH	23017631	bulk 100 pcs.	ML 136

- With ground pins through-hole and SMT signal pin

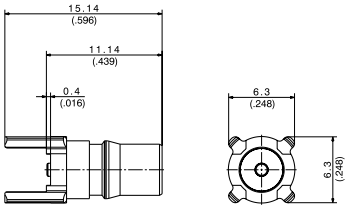



HUBER+SUHNER type	Item no.	Packaging	PCB layout
96_QMA-50-0-1/111_NH	84003328	bulk 100 pcs.	ML 155

Cable groups see page 32 | Assembly tools see page 531 | Mounting holes/PCB layouts see page 561

L'IMPULSION
Retrouvez nous sur
www.limpulsion.fr

Series QMA – PCB connectors

Right angle PCB jacks (female)

- Surface mount type SMT (with positioning pin)

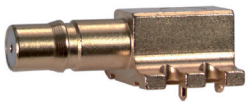

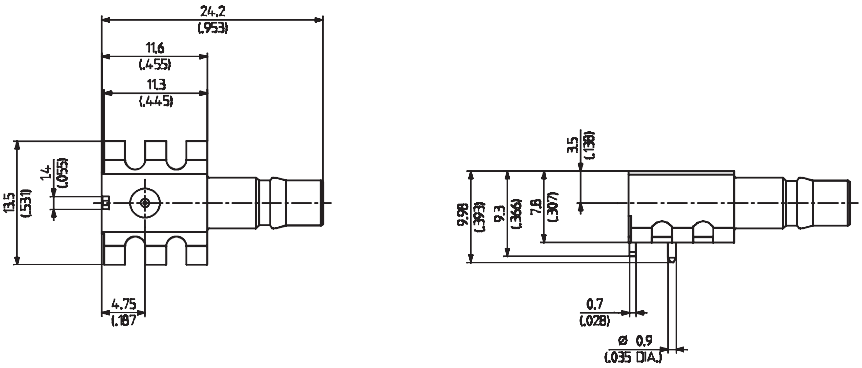

HUBER+SUHNER type	Item no.	Packaging	PCB layout
85_QMA-S50-0-2/111_NM	23021299	tape and reel	ML 137

- With stand-off

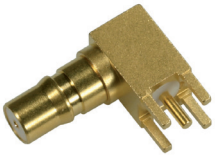

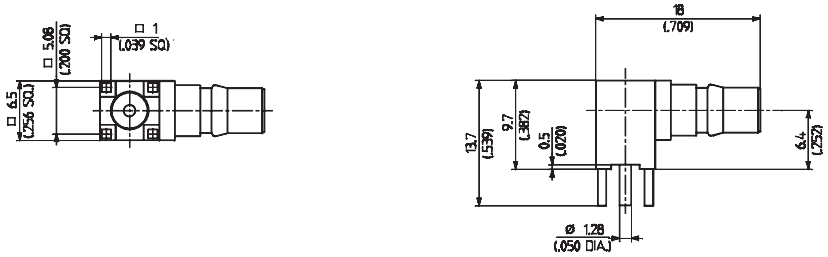

HUBER+SUHNER type	Item no.	Packaging	PCB layout
85_QMA-50-0-3/111_NH	23021463	bulk 100 pcs.	ML 41

- Surface mount type SMT
- Bulkhead mounted

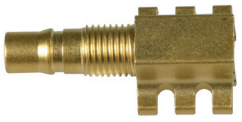

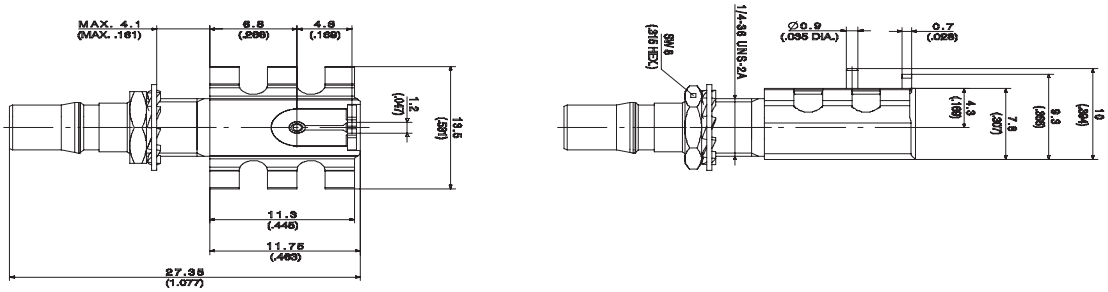

HUBER+SUHNER type	Item no.	Packaging	PCB layout
85_QMA-S50-0-5/111_NH	23037099	bulk 100 pcs.	ML 137

Cable groups see page 32 | Assembly tools see page 531 | Mounting holes/PCB layouts see page 561

L'IMPULSION
Retrouvez nous sur
www.limpulsion.fr

Series QMA – Protection caps

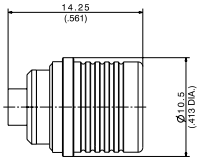



HUBER+SUHNER type	Item no.	Packaging	Notes
62_QMA-W0-0-4/-33_-E	84068119	single	waterproof

Cable groups see page 32 | Assembly tools see page 531 | Mounting holes/PCB layouts see page 561

L'IMPULSION
Retrouvez nous sur
www.limpulsion.fr

QMA eXtreme – XQMA

Description

QMA eXtreme is the advanced version of the waterproof QMA, combining the quick lock mechanism and waterproof properties also in rough environmental conditions. The coupling mechanism is completely waterproof and not only the

RF signal path, thus protecting the connector from corrosion in a salty atmosphere and from freezing in case of high humidity and low temperature.

Key features

- IP68 sealing on the complete connection including coupling mechanism
- High corrosion resistance
- Freezing protection

Benefits

- Compact modules design
- Easy connection with outdoor protection
- All benefits of the quick lock connection



For more product information please contact our offices.



Cable groups see page 32 | Assembly tools see page 531 | Mounting holes/PCB layouts see page 561

L'IMPULSION | Retrouvez nous sur www.limpulsion.fr

Series QMA – calibration with adaptor swapping method

For return loss/VSWR measurement of QMA connectors, HUBER+SUHNER recommends the following calibration method:

Calibration with PC3.5 to PC3.5 calibration adaptors (SMA calibration)

Adaptors: 31_PC35-50-0-2/199_NE (item no. 23020456) or
32_PC35-50-0-2/199_NE (item no. 23020457) or
33_PC35-50-0-2/199_NE (item no. 23020453) see all three adaptors on page 518 - 520

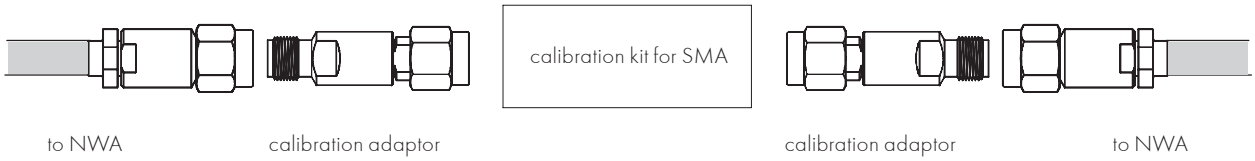

Exchanging of the calibration adaptors with the required QMA adaptors

31_PC35-QMA-50-1/199_NE (Item no. 23017468) see page 519 or
33_PC35-QMA-50-1/199_NE (Item no. 23017467) see page 520 or
33_QMA-PC35-50-1/1--_NE (Item no. 23017488) see page 520

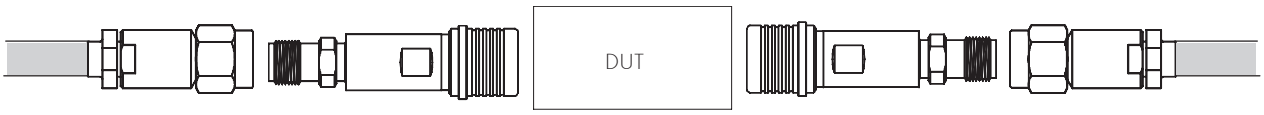

Cable groups see page 32 | Assembly tools see page 531 | Mounting holes/PCB layouts see page 561

L'IMPULSION
Retrouvez nous sur
www.limpulsion.fr

Series QN – coaxial connectors

Description

HUBER+SUHNER QN coaxial connectors are available with 50 Ω impedance. The frequency range extends to 11 GHz, depending on the connector and cable type, however most of the QN connectors are return loss optimised for frequencies up to 6 GHz. The interface is based on the inner dimensions of the N connector but instead of a threaded coupling mechanism a snap-lock mechanism is used.

The QN interface has a very similar performance to N, but in addition it offers an easier, faster and safe coupling operation, helping the customers to save significantly time during production of their systems.

The packaging density of QN increased compared to N thanks to the fact that no torque spanner is required to fasten the coupling nut. Additionally the outer dimensions of QN are smaller than N, leading to the advantage that even TNC-size flanges can be used at QN connectors.

Content

Description	283
Interface dimensions in mm/inches	283
Features	283
Technical data	284
Cable connectors	285
Receptacles with solder end	289
QN eXtreme – XQN	290
QN calibration	291

Interface dimensions compared to N

Plug (male)

QN

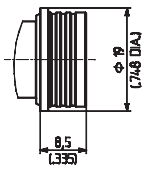

N

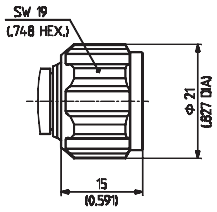

Jack (female)

QN

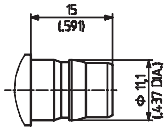

N

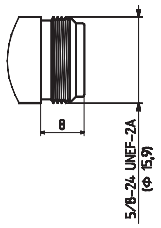

Features of QN connectors

- Cycle time improvement for making RF connections (10 times faster to mount than threaded connectors)
- No torque required
- Higher packaging density
- Free-rotating connection when mated (cable torsion relief)
- Eliminates loosening problems associated with threaded connectors
- Same performance as N
- Best intermodulation performance thanks to the unique interface design

HUBER+SUHNER QN – the cost effective solution for advanced RF interconnections!

IP rating (interface, mated) IP68

L'IMPULSION Retrouvez nous sur www.limpulsion.fr

Series QN – technical data

Electrical data	Requirements
Impedance	50 Ω
Frequency range	DC to 6 GHz (optimised) DC to 11 GHz (working range)
Dielectric withstanding voltage (at sea level)	2500 V rms, 50 Hz
Working voltage (at sea level)	≤ 1000 V rms, 50 Hz
Insulation resistance	≥ 5 • 10^3 MΩ
Contact resistance • Centre contact • Outer contact	 ≤ 1.5 mΩ ≤ 1.5 mΩ
RF leakage	100 MHz to 3 GHz ≥ 90 dB
Return loss (typical)	DC to 3 GHz ≥ 32 dB; 3 to 6 GHz ≥ 25 dB; 6 to 11 GHz ≥ 20 dB
Intermodulation	better –155 dBc (2 × 43 dBm carrier)

Mechanical data	Requirements
Engagement force (typical)	30 N
Disengagement force (typical)	30 N
Retention force for interface	≥ 450 N
Bending moment admissible (interface)	≤ 10 Nm
Contact captivation	≥ 28 N
Durability (matings)	≥ 100

Environmental data	Requirements
Temperature range	–40 to +125 °C/–40 to +257 °F
Climatic category	40/125/21 (IEC 60169_1 16.2)
Moisture resistance	MIL-STD-202, method 106 F
Corrosion	saltspray test acc. to MIL-STD-202, method 101 D, condition B
Vibration	IEC-1169-1 paragraph 9.3.3. (10 to 500 Hz; 5 g)
Shock	MIL-STD-202, method 213, condition 1
Rapid change of temperature	IEC 60169-1 16.4 (–40 to +125 °C/–40 to +257 °F)

Material data		
Connector parts	Material	Plating
Bodies	brass	SUCOPLATE®
Pin contacts	brass	SUCOPRO® gold plating
Socket contacts	spring bronze	SUCOPRO® gold plating
Insulators	PTFE or PFA	
Contact washer	spring bronze or copper-beryllium	SUCOPRO® gold plating

Performance values are typical for the connector interface. Individual component or connector performance may vary depending on the connector design, attachment (e.g. cable, PCB) or application. For detailed specifications please refer to the specific data sheets on our website www.hubersuhner.com.

L'IMPULSION | Retrouvez nous sur www.limpulsion.fr

Series QN – cable connectors

Straight cable plugs (male)

For semi-rigid, Sucoform and Multiflex cables
- Cable entry soldered
- Centre contact plugged-in

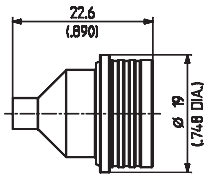



HUBER+SUHNER type	Item no.	Cable group (example)	Packaging	Assembly instruction
11_QN-50-3-3/113_NE	23033393	Y5, Y12 (SUCOFORM_141)	single	27502

For flexible cables
- HUBER+SUHNER full crimp

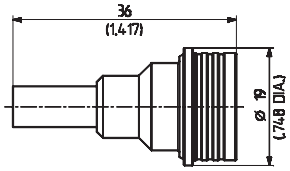



HUBER+SUHNER type	Item no.	Cable group (example)	Packaging	Assembly instruction	Crimp insert
11_QN-50-3-1/133_NE	23033391	U9 (RG_142_B/U, ENVIROFLEX_142)	single	27500	2 B
11_QN-50-3-2/133_NE	23033392	U7 (RG_58_C/U, ENVIROFLEX_B58)		27501	
11_QN-50-3-4/133_NE	84016563	U11, U41 (RG_400_/U, ENVIROFLEX_400)		230235	

For flexible cables
- HUBER+SUHNER full crimp

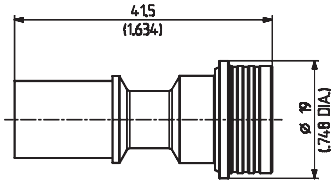



HUBER+SUHNER type	Item no.	Cable group (example)	Packaging	Assembly instruction	Crimp insert
11_QN-50-7-1/133_NE	23033394	U32, U43 (RG_214_/U, ENVIROFLEX_B214)	single	27503	3 D
11_QN-50-7-2/133_NE	23033395	U33 (RG_393_/U, ENVIROFLEX_393)		27504	2.5 D
11_QN-50-7-3/133_NE	23033396	U29, U42 (RG_213_/U, RADOX_RF_213)		27505	3 D

Cable groups see page 32 | Assembly tools see page 531 | Mounting holes/PCB layouts see page 561

L'IMPULSION
Retrouvez nous sur
www.limpulsion.fr

Series QN – cable connectors

Right angle cable plugs (male)

For semi-rigid, Sucoform and Multiflex cables
- Cable entry soldered
- Centre contact soldered

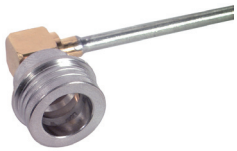

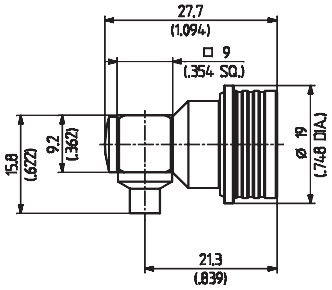

HUBER+SUHNER type	Item no.	Cable group (example)	Packaging	Assembly instruction
16_QN-50-3-3/13-_NE	23033268	Y5, Y12, Y1 (SUCOFORM_141)	single	27508

For flexible cables
- Cable entry crimp
- Centre contact soldered



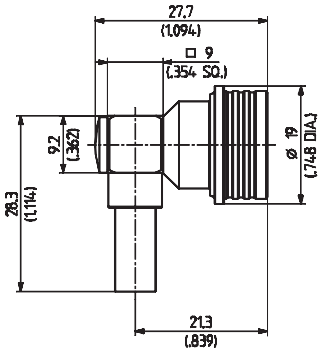

HUBER+SUHNER type	Item no.	Cable group (example)	Packaging	Assembly instruction	Crimp insert
16_QN-50-3-1/133_NE	23033267	U9, U11, U39 (RG_400_/U, ENVIROFLEX_400)	single	27506	B
16_QN-50-3-2/133_NE	23033398	U7 (RG_58_C/U, ENVIROFLEX_B58)		27507	B
16_QN-50-4-1/133_NE	23033078	S16 (SX_04172_B-60)		27509	C

Cable groups see page 32 | Assembly tools see page 531 | Mounting holes/PCB layouts see page 561

Series QN – cable connectors

Right angle cable plugs (male)

For flexible cables
- Cable entry crimp
- Centre contact soldered



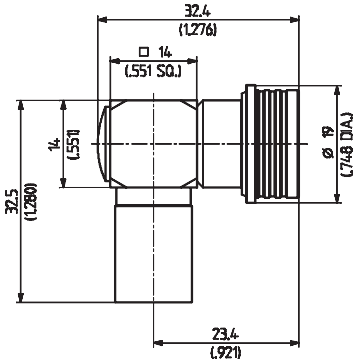

HUBER+SUHNER type	Item no.	Cable group (example)	Packaging	Assembly instruction	Crimp insert
16_QN-50-7-1/133_NE	23032410	U32, U33 (RG_393_/U, ENVIROFLEX_393)	single	27510	D
16_QN-50-7-2/133_NE	23033399	U29 (RG_213_/U, RADOX_RF_213)		27511	
16_QN-50-7-5/133_NE	84078879	U30, X32 (SPUMA_400, SPUMA_400-FR-01, SPUMA_400-RS-FR)		27511	

Straight bulkhead cable jacks (female)

For semi-rigid, Sucoform and Multiflex cables
- Cable entry soldered
- Centre contact plugged-in



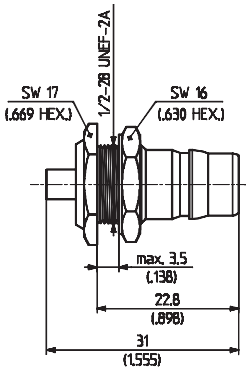

HUBER+SUHNER type	Item no.	Cable group (example)	Packaging	Assembly instruction	Mounting hole
24_QN-50-3-3/13-_NE	23033423	Y5, Y12, Y17 (SUCOFORM_141)	single	27514	ML 112

Cable groups see page 32 | Assembly tools see page 531 | Mounting holes/PCB layouts see page 561

L'IMPULSION
Retrouvez nous sur
www.limpulsion.fr

Series QN – cable connectors

Straight bulkhead cable jacks (female)

For flexible cables

- HUBER+SUHNER full crimp

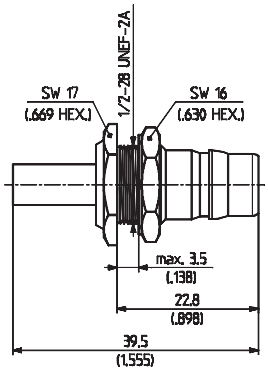



HUBER+SUHNER type	Item no.	Cable group (example)	Packaging	Assembly instruction	Mounting hole	Crimp insert
24_QN-50-3-1/133_NE	23033400	U9 (RG_142_B/U, ENVIROFLEX_142)	single	27512	ML 112	2 B
24_QN-50-3-2/133_NE	23033402	U7 (RG_58_C/U, ENVIROFLEX_B58)		27513		

For flexible cables

- HUBER+SUHNER full crimp

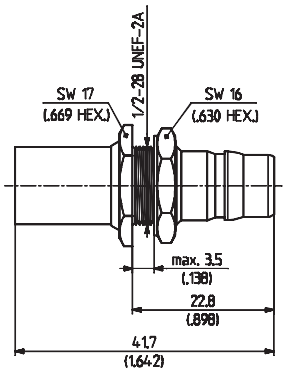



HUBER+SUHNER type	Item no.	Cable group (example)	Packaging	Assembly instruction	Mounting hole	Crimp insert
24_QN-50-7-1/133_NE	23033403	U33 (RG_393_/U, ENVIROFLEX_393)	single	27515	ML 112	2.5 D
24_QN-50-7-2/133_NE	23033404	U32, U43 (RG_214_/U, ENVIROFLEX_B214)		27516		3 D
24_QN-50-7-3/133_NE	23033405	U29, U42 (RG_213_/U), RADOX_RF_213		27517		3 D
24_QN-50-7-5/133_NE	84039869	U30, X32 (SPUMA_400, SPUMA_400-FR-01, SPUMA_400-RS-FR)		253545		4 D

Cable groups see page 32 | Assembly tools see page 531 | Mounting holes/PCB layouts see page 561

L'IMPULSION | Retrouvez nous sur www.limpulsion.fr

Series QN – receptacles with solder end

Receptacles, jacks (female)

For flexible cables

- Bulkhead mounted
- Press-in chassis mount



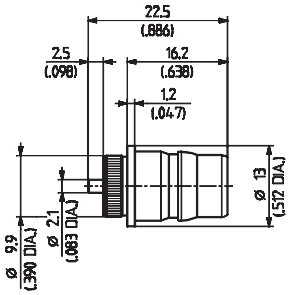

HUBER+SUHNER type	Item no.	Packaging	Notes
22_QN-50-0-1/133_NE	23033237	single	press-in
22_QN-50-0-1/133_NY	23033904	bulk 100 pcs.	

- Panel mounted



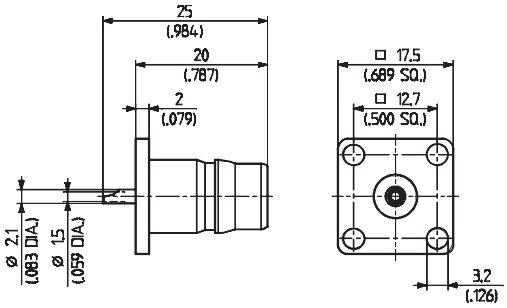

HUBER+SUHNER type	Item no.	Packaging	Notes
23_QN-50-0-1/133_NE	23033251	single	flange with same dimensions as TNC
23_QN-50-0-1/133_NY	23033252	bulk 150 pcs.	

Cable groups see page 32 | Assembly tools see page 531 | Mounting holes/PCB layouts see page 561

L'IMPULSION Retrouvez nous sur www.limpulsion.fr

QN eXtreme – XQN

Description

Besides the outstanding characteristics of the quick lock connector QN, this advanced version has some extra features. The coupling mechanism is completely waterproof and not only the RF signal path, thus protecting the complete connector from corrosion in a salty atmosphere and from freezing in case of high humidity and low temperatures.

This extra features besides the excellent PIM performance (typical –162 dBc) and the optimum power performance (≈350 W by 2 GHz) makes this connector the ideal solution for antenna connections.



For more product information please contact our offices.

Key features

- IP67 sealing for the complete connection including coupling mechanism
- High corrosion resistance
- Freezing protection

Benefits

- Compactness (X-QN size is smaller than DIN716 and DIN 4.1/9.5)
- Easy to install (tool-less, quick-lock)
- No taping required (secure mating with outdoor protection)
- Overall lower costs of ownership
- Excellent PIM performance



Cable groups see page 32 | Assembly tools see page 531 | Mounting holes/PCB layouts see page 561

L'IMPULSION
Retrouvez nous sur
www.limpulsion.fr

Series QN – calibration with adaptor swapping method

1. Calibration with N to PC7 calibration adaptors (N calibration)

Adaptors: 32_N-PC7-50-6/1--_NE (item no. 23032917) see page 506



to NWA calibration adaptor

calibration kit for N



calibration adaptor to NWA

2. Exchanging of the calibration adaptors with the required QN adaptors

32_PC7-QN-50-1/1--_NE (item no. 23032720) see page 520



DUT



Cable groups see page 32 | Assembly tools see page 531 | Mounting holes/PCB layouts see page 561

L'IMPULSION
Retrouvez nous sur
www.limpulsion.fr

L'IMPULSION | Retrouvez nous sur www.limpulsion.fr

Series BNC 50 Ω – coaxial miniature connectors

Description

HUBER+SUHNER BNC is still a popular connector series, featuring a two stud bayonet coupling mechanism, which is particularly useful for frequently coupled and uncoupled RF connections with frequencies up to 4 GHz.

Compatibility

50 Ω BNC connectors and 75 Ω BNC connectors are intermateable without any restrictions.

Content

Description	293
Compatibility	293
Interface dimensions in mm/inches	293
Technical data	294
Cable connectors	295
Receptacles with solder end	304
PCB connectors	309
Protective caps and shorts	310

Interface dimensions (mm/inches)

Plug (male)

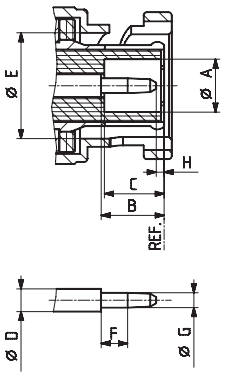

	Plug		Jack	
	min.	max.	min.	max.
A	4.83/0.190	-	-	4.72/0.186
B	5.33/0.210	5.84/0.230	4.72/0.186	5.23/0.206
C	5.28/0.208	5.79/0.228	4.78/0.188	5.28/0.208
D	2.06/0.081	2.21/0.087	2.06/0.081	2.21/0.087
E	9.78/0.385	9.91/0.390	9.60/0.378	9.70/0.382
F	1.98/0.078	-	4.95/0.195	-
G	1.32/0.052	1.37/0.054	8.31/0.327	8.51/0.335
H	0.08/0.003	-	8.10/0.319	8.15/0.321
I	-	-	10.52/0.414	-

Jack (female)

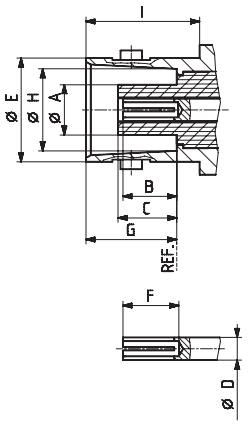

Interface dimensions conformable to the standards:

International:	IEC 61169-8
Europe:	CECC 22120
USA:	MIL-PRF-39012
	BNC Interface MIL-STD-348/301
Great Britain:	BS 9210 N 004

L'IMPULSION
Retrouvez nous sur
www.limpulsion.fr

Series BNC 50 Ω – technical data

Electrical data	Requirements
Impedance	50 Ω
Frequency range	DC to 4 GHz
Dielectric withstanding voltage (at sea level)	1.5 kV rms, 50 Hz (depending on cable)
Working voltage (at sea level)	500 V rms, 50 Hz (depending on cable)
Insulation resistance	≥ 5 • 10^3 MΩ
Contact resistance • Centre contact • Outer contact	 ≤ 1.5 mΩ ≤ 1 mΩ
RF leakage (between 2 to 3 GHz)	≥ 55 dB

Mechanical data	Requirements
Coupling nut torque	7 to 28 Ncm/0.6 to 2.5 in lbs
Coupling nut retention force	≥ 450 N/101.2 lbs
Contact captivation	≥ 27 N/6.1 lbs
Cable retention force [1]	see pages 32 – 41
Durability (matings)	≥ 500

Environmental data	Requirements
Temperature range	–65 to +165 °C/–85 to +329 °F
Climatic category	IEC → 55/155/21
Thermal shock	MIL-STD-202, method 107, condition B
Moisture resistance	MIL-STD-202, method 106
Corrosion	saltspray test acc. to MIL-STD-202, method 101, condition B
Vibration	MIL-STD-202, method 204, condition B
Shock	MIL-STD-202, method 213, condition G

Material data		
Connector parts	Material	Plating
Bodies	brass	SUCOPLATE®/SUCOPRO® gold plating
Pin contacts	brass	gold/SUCOPRO® gold plating
Socket contacts	copper-beryllium alloy copper alloy	gold/SUCOPRO® gold plating
Crimp ferrules	copper/brass	SUCOPLATE®
Insulators	PTFE or PFA	
Gaskets	silicone rubber	

Performance values are typical for the connector interface. Individual component or connector performance may vary depending on the connector design, attachment (e.g. cable, PCB) or application. For detailed specifications please refer to the specific data sheets on our website www.hubersuhner.com.

[1] Value considers maximum load of the cables without irreversible variations of specifications.

L'IMPULSION | Retrouvez nous sur www.limpulsion.fr

Series BNC 50 Ω – cable connectors

Straight cable plugs (male)

For semi-rigid cables

- Cable entry soldered
- Centre contact soldered



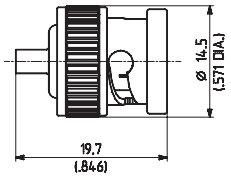

Fig. 1

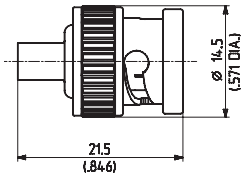

Fig. 2

HUBER+SUHNER type	Item no.	Cable group (example)	Packaging	Assembly instruction	Fig.
11_BNC-50-2-20/103_NE [1]	22641778	Y3, Y11, Y16 (EZ_86)	single	9100	1
11_BNC-50-3-54/103_NE [1]	22540108	Y5, Y12, Y17 (EZ_141)		9106	2

For flexible cables

- Cable entry clamp
- Centre contact soldered



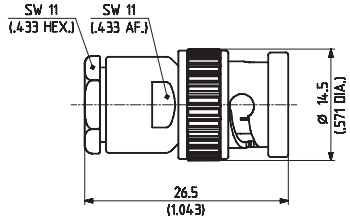

HUBER+SUHNER type	Item no.	Cable group (example)	Packaging	Assembly instruction
11_BNC-50-1-1/133_NE	22540021	U1 (RG_178_B/U, ENVIROFLEX_178)	single	3005
11_BNC-50-2-1/133_NE	22540029	U2 (RG_316_/U, ENVIROFLEX_316)		
11_BNC-50-3-1/133_NE [1]	22540045	U7, U9 (RG_58_C/U, ENVIROFLEX_B58)		3004
11_BNC-50-3-5/133_NE	22540054			3005

[1] Centre contact NOT captivated.

Cable groups see page 32 | Assembly tools see page 531 | Mounting holes/PCB layouts see page 561

L'IMPULSION Retrouvez nous sur www.limpulsion.fr

Series BNC 50 Ω – cable connectors

Straight cable plugs (male)

For flexible cables

- Cable entry clamp
- Centre contact soldered



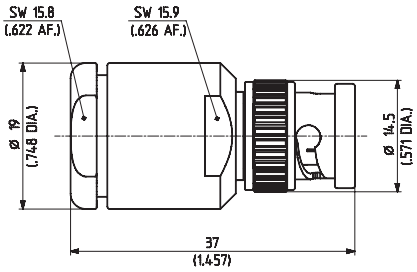

HUBER+SUHNER type	Item no.	Cable group (example)	Packaging	Assembly instruction
11_BNC-50-7-1/133_NE	22540145	U29 (RG_213/U, RADOX_RF_213)	single	3008
11_BNC-50-7-2/133_NE	22540149	U32 (RG_214/U ENVIROFLEX_B214)		

For flexible cables

- HUBER+SUHNER full crimp
- Taper sleeves see page 554



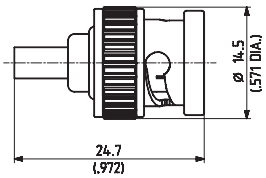

Fig. 1

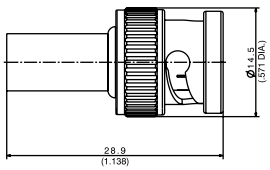

Fig. 2

HUBER+SUHNER type	Item no.	Cable group (example)	Packaging	Assembly instruction	Crimp insert	Fig.
11_BNC-50-1-5/133_NE	22641759	U1 (RG_178_B/U, ENVIROFLEX_178)	single	9068	1 A	1
11_BNC-50-2-13/133_NE 11_BNC-50-2-13/133_NH	22543749 22644716	U2 (RG_316_/U, ENVIROFLEX_316)	single bulk 100 pcs.			
11_BNC-50-2-14/133_NE 11_BNC-50-2-14/133_NH	22641683 22649839	U4 (K_02252_D, ENVIROFLEX_316_D)	single bulk 100 pcs.			
11_BNC-50-2-16/133_NE 11_BNC-50-2-16/133_NH	22544026 22648466	U3 (G_01130_HT)	single bulk 100 pcs.			
11_BNC-50-3-87/133_NE 11_BNC-50-3-87/133_NH	84057578 84057579	U7 (RG_58_C/U, ENVIROFLEX_B58)	single bulk 100 pcs.	3015	2 B	2
11_BNC-50-3-86/133_NE 11_BNC-50-3-86/133_NH	84057576 84057577	U9 (RG_223_/U, ENVIROFLEX_B223)	single bulk 100 pcs.			
11_BNC-50-3-36/133_NE	22540089	U13 (G_03130_HT)	single	27057	2 C	
11_BNC-50-3-88/133_NE 11_BNC-50-3-88/133_NH	84057580 84057581	U11, U41 (RG_400_/U, ENVIROFLEX_400)	single bulk 100 pcs.	3015	2 B	
11_BNC-50-4-4/133_NE 11_BNC-50-4-4/133_NH	22540115 22648238	U16 (RG_59_B/U, RADOX_RF_59)	single bulk 100 pcs.		2 C	

Cable groups see page 32 | Assembly tools see page 531 | Mounting holes/PCB layouts see page 561

L'IMPULSION | Retrouvez nous sur www.limpulsion.fr

Series BNC 50 Ω – cable connectors

Straight cable plugs (male)

For flexible cables
- HUBER+SUHNER full crimp
- Taper sleeves see page 554

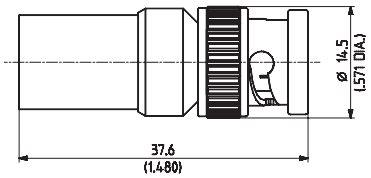



HUBER+SUHNER type	Item no.	Cable group (example)	Packaging	Assembly instruction	Crimp insert
11_BNC-50-7-6/133_NE	22640863	U32, U43 (RG_214/U, ENVIROFLEX_B214)	single	3061	3 D
11_BNC-50-7-7/133_NE	22543766	U29, U42 (RG_213/U, RADOX_RF_213)			

Right angle cable plugs (male)

For flexible cables
- Cable entry clamp

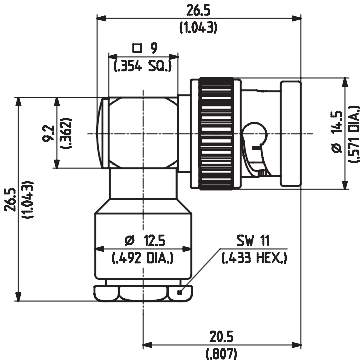

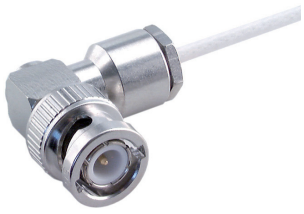

HUBER+SUHNER type	Item no.	Cable group (example)	Packaging	Assembly instruction
16_BNC-50-2-9/133_NE	84013192	U2 (RG_316_/U, ENVIROFLEX_316)	single	3024
16_BNC-50-3-25/133_NE	84013233	U7, U9 (RG_58_C/U, ENVIROFLEX_B58)		

Cable groups see page 32 | Assembly tools see page 531 | Mounting holes/PCB layouts see page 561

Series BNC 50 Ω – cable connectors

Right angle cable plugs (male)

For flexible cables

- Cable entry clamp

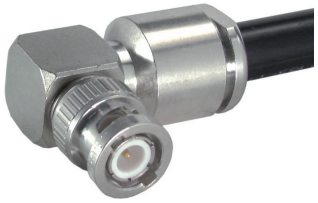

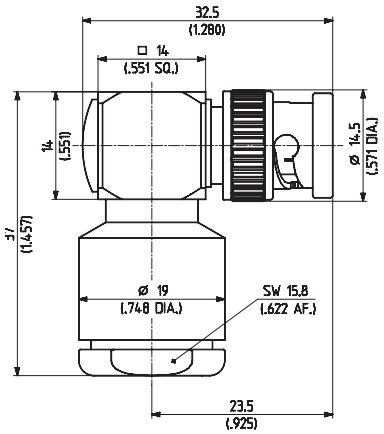

HUBER+SUHNER type	Item no.	Cable group (example)	Packaging	Assembly instruction
16_BNC-50-7-6/133_NE	22651588	U29 (RG_213_/U, RADOX_RF_213) U32 (RG_214_/U, ENVIROFLEX_B214)	single	27121

For flexible cables

- Cable entry crimp
- Center contact soldered
- Taper sleeves see page 554



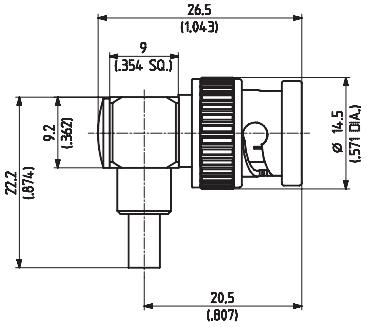

Fig. 1

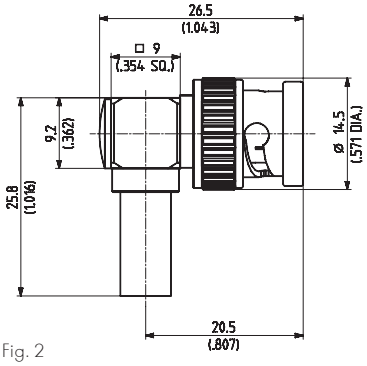

Fig. 2

HUBER+SUHNER type	Item no.	Cable group (example)	Packaging	Assembly instruction	Crimp insert	Fig.
16_BNC-50-2-3/133_NE 16_BNC-50-2-3/133_NH	22540168 22648628	U2 (RG_316_/U, ENVIROFLEX_316)	single bulk 100 pcs.	3079	A	1
16_BNC-50-2-5/133_NE 16_BNC-50-2-5/133_NH	22540169 22650221	U4 (K_02252_D, ENVIROFLEX_316_D)	single bulk 100 pcs.			
16_BNC-50-3-5/133_NE	22540185	U7 (RG_58_C/U, ENVIROFLEX_B58)	single	3058	B	2
16_BNC-50-3-7/133_NE 16_BNC-50-3-7/133_NH	22540192 22650222	U9, U11; U39 (RG _400_/U, ENVIROFLEX_400)	single bulk 100pcs.			

Cable groups see page 32 | Assembly tools see page 531 | Mounting holes/PCB layouts see page 561

L'IMPULSION | Retrouvez nous sur www.limpulsion.fr

Series BNC 50 Ω – cable connectors

Right angle cable plugs (male)

For flexible cables
- HUBER+SUHNER full crimp
- Taper sleeves see page 554

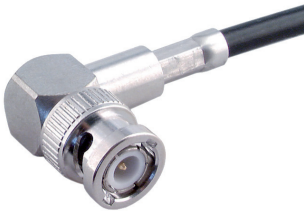

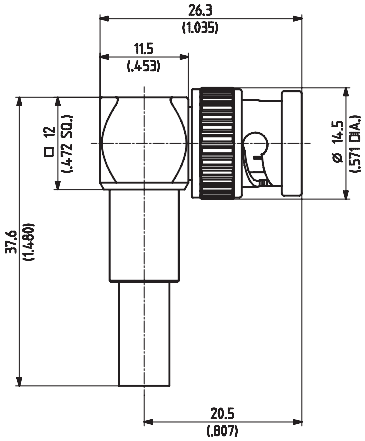

HUBER+SUHNER type	Item no.	Cable group (example)	Packaging	Assembly instruction	Crimp insert
16_BNC-50-3-13/133_NE	22540198	U7 (RG_58_C/U, ENVIROFLEX_B58)	single	3015	2 B

Straight cable jacks (female)

For flexible cables
- Cable entry clamp



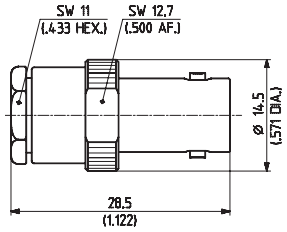

HUBER+SUHNER type	Item no.	Cable group (example)	Packaging	Assembly instruction
21_BNC-50-2-1/133_NE	22540228	U2 (RG_316_/U, ENVIROFLEX_316)	single	3005
21_BNC-50-3-12/133_NE	22540263	U7, U9 (RG_58_C/U, ENVIROFLEX_B58)		

Cable groups see page 32 | Assembly tools see page 531 | Mounting holes/PCB layouts see page 561

L'IMPULSION
Retrouvez nous sur
www.limpulsion.fr

Series BNC 50 Ω – cable connectors

Straight cable jacks (female)

For flexible cables

- HUBER+SUHNER full crimp
- Taper sleeves see page 554



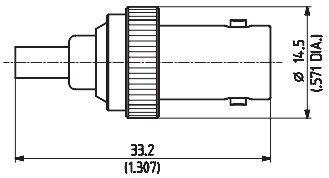

Fig. 1

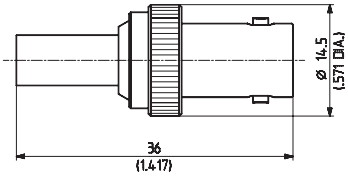

Fig. 2

HUBER+SUHNER type	Item no.	Cable group (example)	Packaging	Assembly instruction	Crimp insert	Fig.
21_BNC-50-1-4/133_NE	22641777	U1 (RG_178_B/U, ENVIROFLEX_178)	single	9068	1 A	1
21_BNC-50-2-9/133_NE	22641732	U2 (RG_316_/U, ENVIROFLEX_316)				
21_BNC-50-2-10/133_NE	22641779	U4 (K_02252_D, ENVIROFLEX_316_D)				
21_BNC-50-3-27/133_NE	84057699	U7 (RG_58_C/U, ENVIROFLEX_B58)		0000231215	2 B	2
21_BNC-50-3-28/133_NE	84057722	U9, U39 (RG_223_/U)		0000231453		

Straight bulkhead cable jacks (female)

For semi-rigid cables

- Cable entry soldered
- Insulating washers see page 556
- With panel seal



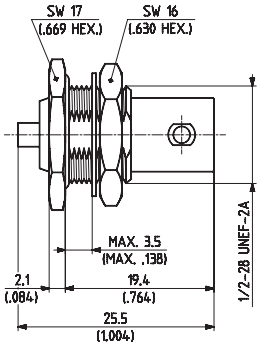

Fig. 1

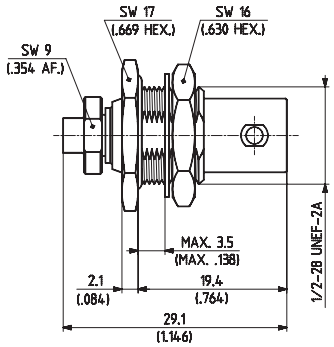

Fig. 2

HUBER+SUHNER type	Item no.	Cable group (example)	Packaging	Assembly instruction	Mounting hole	Fig.
24_BNC-50-2-20/133_NE	22641886	Y3, Y11, Y16 (EZ_86)	single	9100	ML 4	1
24_BNC-50-3-33/133_NE	22641923	Y5, Y12, Y17 (EZ_141)		9005		2

Cable groups see page 32 | Assembly tools see page 531 | Mounting holes/PCB layouts see page 561

L'IMPULSION | Retrouvez nous sur www.limpulsion.fr

Series BNC 50 Ω – cable connectors

Straight bulkhead cable jacks (female)

For flexible cables
- Cable entry clamp
- With panel seal
- Insulating washers see page 556

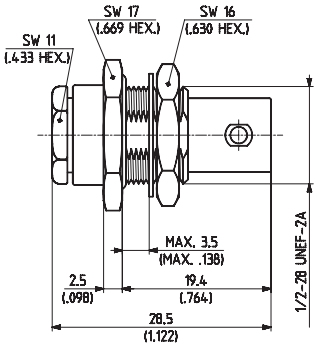



HUBER+SUHNER type	Item no.	Cable group (example)	Packaging	Assembly instruction	Mounting hole
24_BNC-50-1-1/133_NE	22540362	U1 (RG_178_B/U, ENVIROFLEX_178)	single	3005	ML 4
24_BNC-50-2-1/133_NE	22540365	U2 (RG_316_/U, ENVIROFLEX_316)			
24_BNC-50-3-5/133_NE	22540385	U7, U9 (RG_58_C/U, ENVIROFLEX_B58)			

For flexible cables
- HUBER+SUHNER full crimp
- With panel seal
- Insulating washers see page 556
- Taper sleeves see page 554

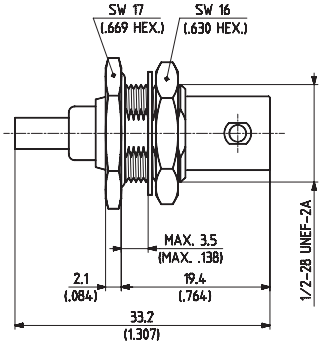

Fig. 1

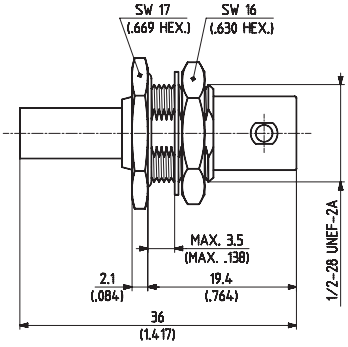

Fig. 2



HUBER+SUHNER type	Item no.	Cable group (example)	Packaging	Assembly instruction/ Mounting hole	Crimp insert	Fig.
24_BNC-50-1-6/133_NE 24_BNC-50-1-6/133_NH	22641781 84011438	U1 (RG_178_B/U, ENVIROFLEX_178)	single bulk 100 pcs.	9068/ML 4	1 A	1
24_BNC-50-2-45/133_NE 24_BNC-50-2-45/133_NH	84057863 84057864	U2 (RG_316_/U, ENVIROFLEX_316)	single bulk 100 pcs.			
24_BNC-50-2-46/133_NE 24_BNC-50-2-46/133_NH	84057872 84057873	U4 (K_02252_D, ENVIROFLEX_316_D)	single bulk 100 pcs.			
24_BNC-50-3-1/133_NE	22540378	U7 (RG_58_C/U, ENVIROFLEX_B58)	single	3015/ML 4	2 B	2
24_BNC-50-3-8/133_NE	22540389	U9 (RG_223_/U, ENVIROFLEX_B223)	single			
24_BNC-50-3-25/133_NE 24_BNC-50-3-25/133_NH	22658913 22660362	U11 (RG_400_/U, ENVIROFLEX_400)	single bulk 100 pcs.			

Cable groups see page 32 | Assembly tools see page 531 | Mounting holes/PCB layouts see page 561

Series BNC 50 Ω – cable connectors

Straight bulkhead cable jacks (female)

For flexible cables

- HUBER+SUHNER full crimp
- Taper sleeves see page 554
- Front mounting
- Without panel seal



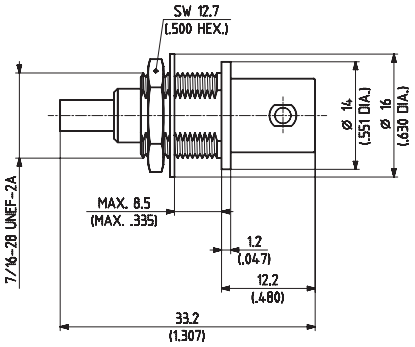

HUBER+SUHNER type	Item no.	Cable group (example)	Packaging	Assembly instruction	Mounting hole	Crimp insert
24_BNC-50-2-29/133_NE	22648682	U2 (RG_316_/U, ENVIROFLEX_316)	single	9068	ML 3	1 A

For flexible cables

- HUBER+SUHNER full crimp
- With panel seal
- Insulating washers see page 556
- Taper sleeves see page 554



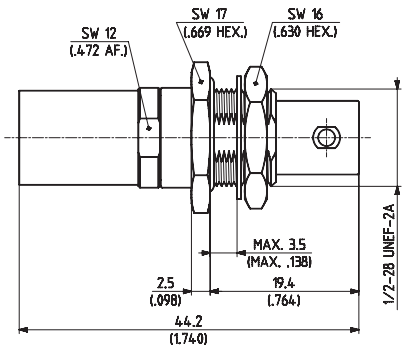

HUBER+SUHNER type	Item no.	Cable group (example)	Packaging	Assembly instruction	Mounting hole	Crimp insert
24_BNC-50-7-3/133_NE	22540415	U29, U42 (RG_213_/U, RADOX_RF_213)	single	9121	ML 4	3 D

Cable groups see page 32 | Assembly tools see page 531 | Mounting holes/PCB layouts see page 561

L'IMPULSION | Retrouvez nous sur www.limpulsion.fr

Series BNC 50 Ω – cable connectors

Straight panel cable jacks (female)

For flexible cables
- HUBER+SUHNER full crimp
- Taper sleeves see page 554

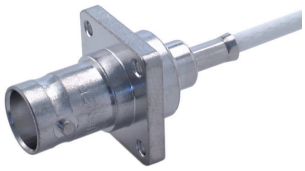

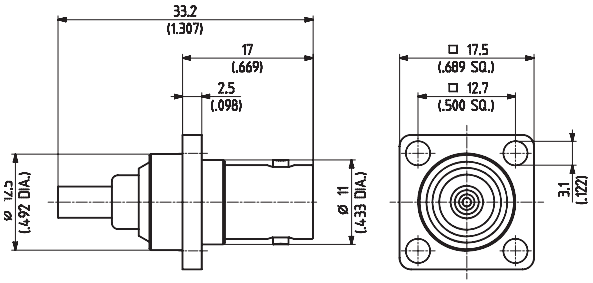

Fig. 1

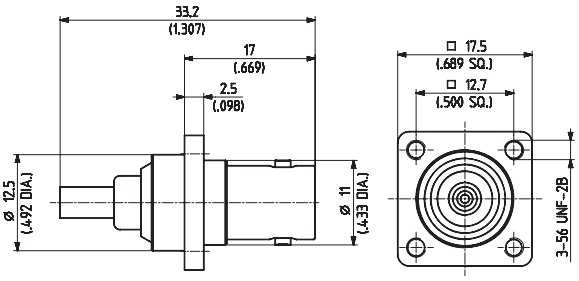

Fig. 2

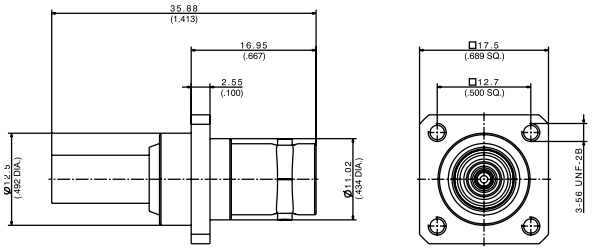

Fig. 3

HUBER+SUHNER type	Item no.	Cable group (example)	Packaging	Assembly instruction	Mounting hole	Crimp insert	Fig.
25_BNC-50-2-13/133_NE	22641919	U2 (RG_316_/U, ENVIROFLEX_316)	single	9068	ML 8	1 A	2 [1]
25_BNC-50-2-14/133_NE	22641924						1
25_BNC-50-2-16/133_NE	22641795	U4 (K_02252_D, ENVIROFLEX_316_D)					
25_BNC-50-3-39/133_NE	84057974	U7 (RG_58_C/U, ENVIROFLEX_B58)		0000231565		2 B	3

[1] Mounting also possible with screws ISO M 2.5.

Cable groups see page 32 | Assembly tools see page 531 | Mounting holes/PCB layouts see page 561

L'IMPULSION
Retrouvez nous sur
www.limpulsion.fr

Series BNC 50 Ω – receptacles with solder end

Receptacles, plugs (male)

- Bulkhead mounted
- Insulating washers see page 556
- Solder tags see page 557



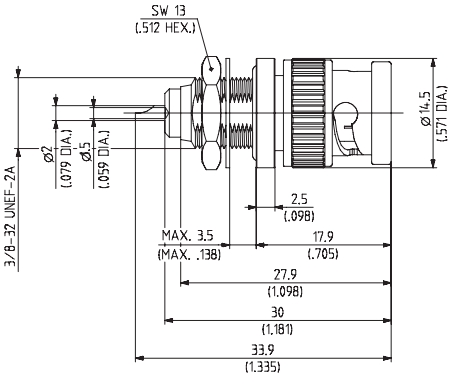

HUBER+SUHNER type	Item no.	Packaging	Mounting hole	Panel thickness	Notes
12_BNC-50-0-1/133_NE	22540154	single	ML 2	max. 3.5 mm	with panel seal

Receptacles, jacks (female)

- Bulkhead mounted
- Insulating washers see page 556
- Solder tags see page 557



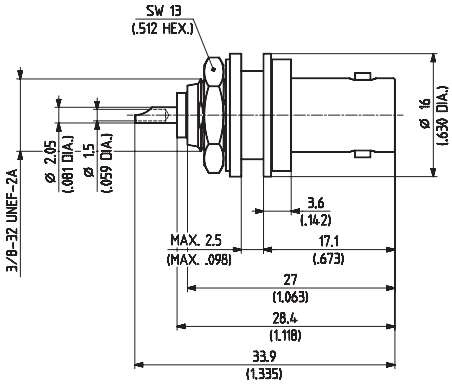

Fig. 1

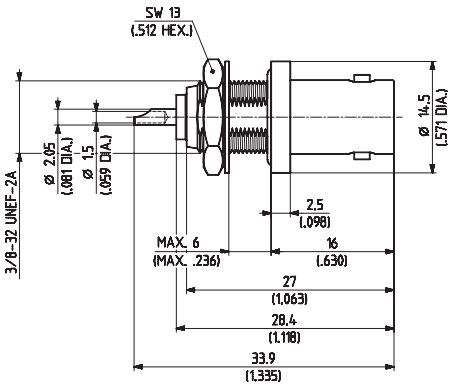

Fig. 2

HUBER+SUHNER type	Item no.	Packaging	Mounting hole	Fig.	Notes
22_BNC-50-0-2/133_NE	22540293	single	ML 102	1	insulated mounting [1]
22_BNC-50-0-3/133_NE 22_BNC-50-0-3/133_NH	22540301 22645500	single bulk 100 pcs.	ML 1	2	with panel seal

[1] equipped with insulating washers 77_Z-0-0-2 (not protected against rotation)

Cable groups see page 32 | Assembly tools see page 531 | Mounting holes/PCB layouts see page 561

L'IMPULSION | Retrouvez nous sur www.limpulsion.fr

Series BNC 50 Ω – receptacles with solder end

Receptacles, jacks (female)

- Bulkhead mounted
- Insulating washers see page 556
- Solder tags see page 557



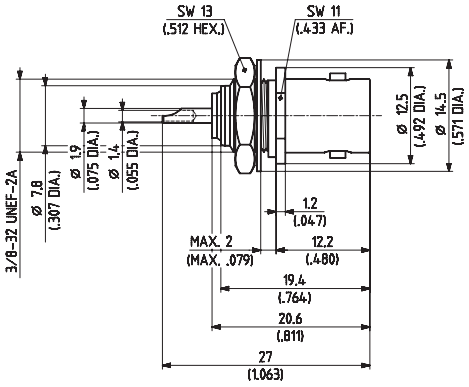

Fig. 1

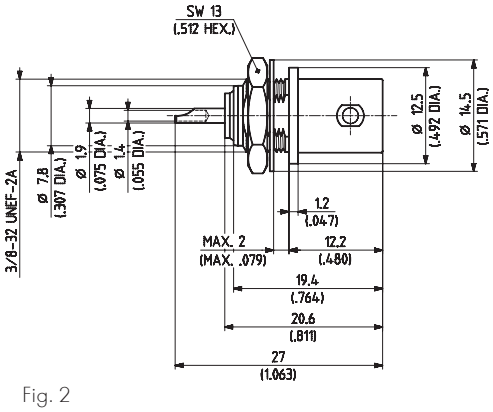

Fig. 2

HUBER+SUHNER type	Item no.	Packaging	Mounting hole	Fig.	Notes
22_BNC-50-0-4/133_NE	22540303	single	ML 3	1	not suitable for insulated mounting
22_BNC-50-0-5/133_NE 22_BNC-50-0-5/133_NH	22540308 22650242	single bulk 100 pcs.	ML 2	2	suitable for insulated mounting

- Bulkhead mounted
- Insulating washers see page 556
- Solder tags see page 557



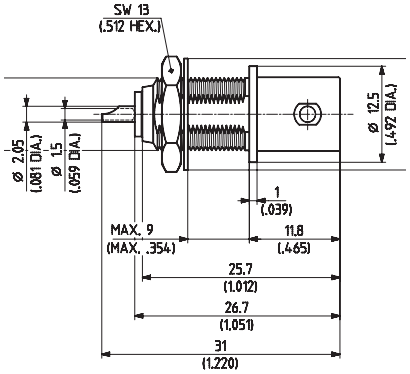

Fig. 1

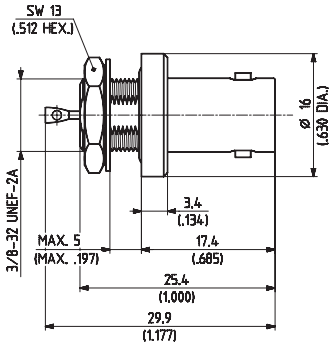

Fig. 2

HUBER+SUHNER type	Item no.	Packaging	Mounting hole	Fig.	Notes
22_BNC-50-0-16/133_NE	22540314	single	ML 2	1	suitable for insulated mounting
22_BNC-50-0-24/100_NE [1]	22540321			2	hermetically sealed/body silver plated leak rate ≤ 10^{-6} Torr l/sec.(atm cc/s)

[1] RoHS compliant alternative on request.

Cable groups see page 32 | Assembly tools see page 531 | Mounting holes/PCB layouts see page 561

L'IMPULSION
Retrouvez nous sur
www.limpulsion.fr

Series BNC 50 Ω – receptacles with solder end

Receptacles, plugs (male)

- Panel mounted

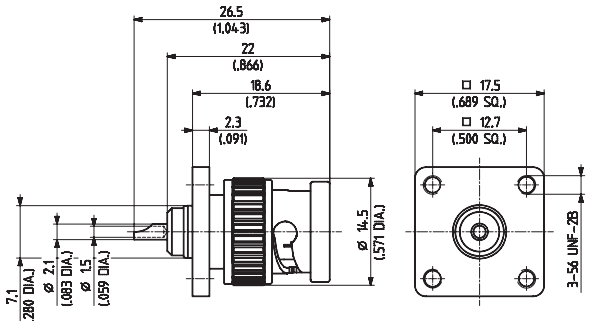



HUBER+SUHNER type	Item no.	Packaging	Mounting hole	Notes
13_BNC-50-0-1/133_NE	22543470	single	ML 6	mounting also possible with screws ISO M 2.5

- Panel mounted

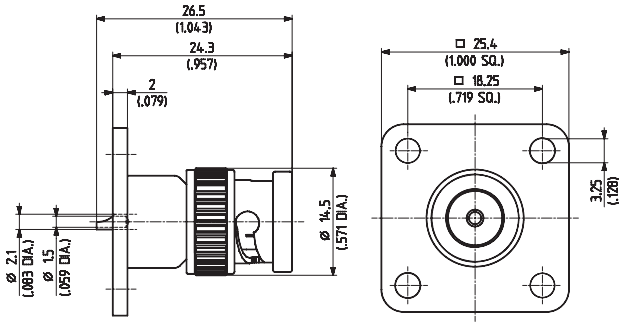

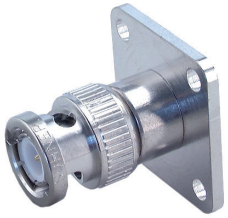

HUBER+SUHNER type	Item no.	Packaging	Mounting hole	Notes
13_BNC-50-0-2/133_NE	22540160	single	ML 5	suitable for Sucobox applications, see page 558

Receptacles, jacks (female)

- Panel mounted

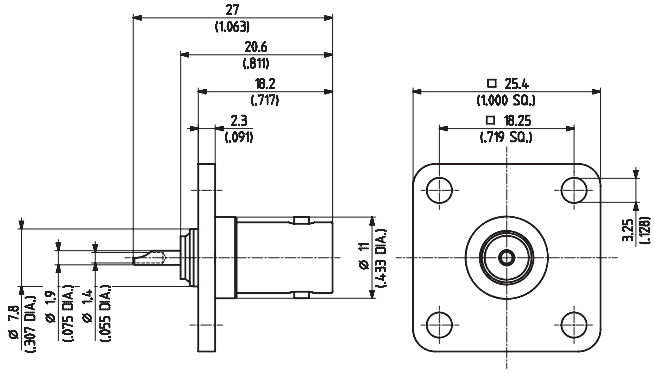

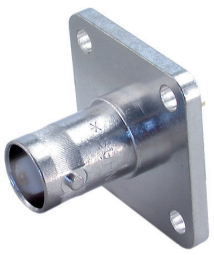

HUBER+SUHNER type	Item no.	Packaging	Mounting hole	Notes
23_BNC-50-0-2/133_NE	22540333	single	ML 5	suitable for Sucobox applications, see page 558

Cable groups see page 32 | Assembly tools see page 531 | Mounting holes/PCB layouts see page 561

L'IMPULSION
Retrouvez nous sur
www.limpulsion.fr

Series BNC 50 Ω – receptacles with solder end

Receptacles, jacks (female)

- Panel mounted

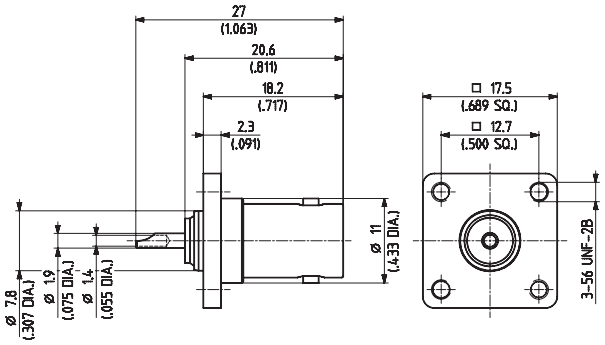

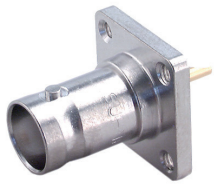

HUBER+SUHNER type	Item no.	Packaging	Mounting hole	Notes
23_BNC-50-0-12/133_NE	22540349	single	ML 6	mounting also possible with screws ISO M 2.5

- Panel mounted

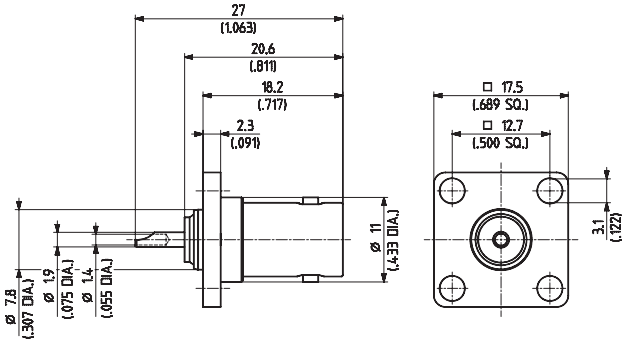

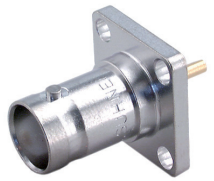

HUBER+SUHNER type	Item no.	Packaging	Mounting hole
23_BNC-50-0-16/133_NE	22540355	single	ML 6

Cable groups see page 32 | Assembly tools see page 531 | Mounting holes/PCB layouts see page 561

L'IMPULSION
Retrouvez nous sur
www.limpulsion.fr

Series BNC 50 Ω – receptacles with solder end

Right angle receptacles, jack (female)

- Bulkhead mounted
- With panel seal
- Insulating washers see page 556



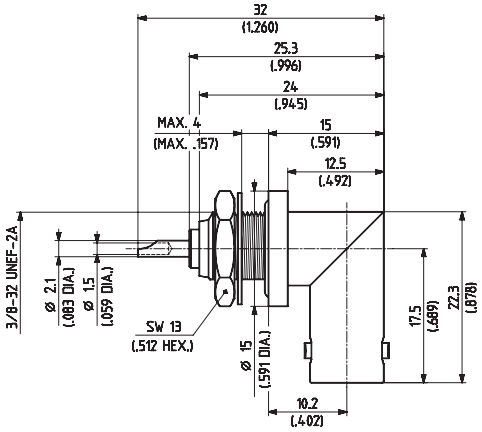

HUBER+SUHNER type	Item no.	Packaging	Mounting hole
27_BNC-50-0-1/133_NE	22540492	single	ML 2

- Panel mounted

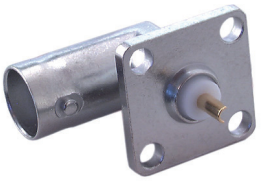

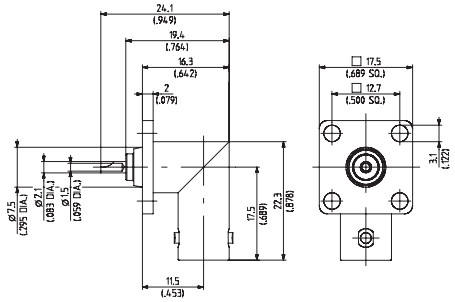

HUBER+SUHNER type	Item no.	Packaging	Mounting hole	Notes
28_BNC-50-0-2/133_NE	22540500	single	ML 6	fastening hole d = 3.1 mm/0.12 in

Cable groups see page 32 | Assembly tools see page 531 | Mounting holes/PCB layouts see page 561

L'IMPULSION | Retrouvez nous sur www.limpulsion.fr

Series BNC 50 Ω – PCB connectors

Straight PCB jacks (female)

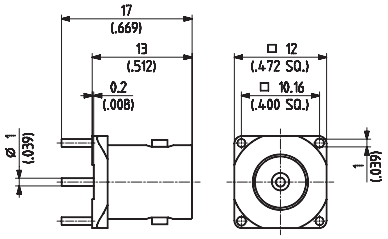



HUBER+SUHNER type	Item no.	Packaging	Mounting hole	Notes
82_BNC-50-0-1/133_NE 82_BNC-50-0-1/133_NH	22645779 22543974	single bulk 100 pcs.	ML 49	plating body: SUCOPLATE®
82_BNC-50-0-1/111_NH	23012124	bulk 100 pcs.		plating body: SUCOPRO® gold plating

Right angle PCB jacks (female)

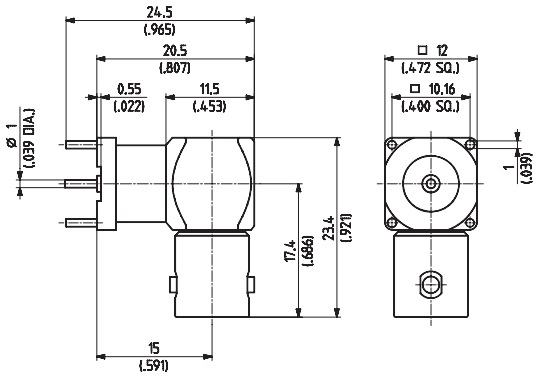

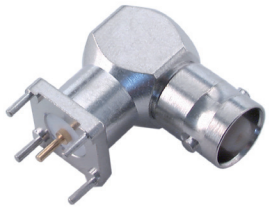

HUBER+SUHNER type	Item no.	Packaging	Mounting hole	Notes
85_BNC-50-0-1/133_NE	22540736	single	ML 49	plating body: SUCOPLATE®

Cable groups see page 32 | Assembly tools see page 531 | Mounting holes/PCB layouts see page 561

L'IMPULSION
Retrouvez nous sur
www.limpulsion.fr

Series BNC 50 Ω – protective caps and shorts

Protective cap for plugs (male)

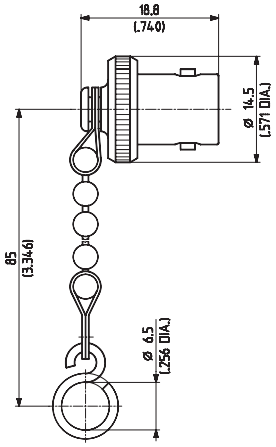



HUBER+SUHNER type	Item no.	Packaging	Notes
61_BNC-0-0-1/-33_-E	22540660	single	with chain and loop

Protective caps for jacks (female)

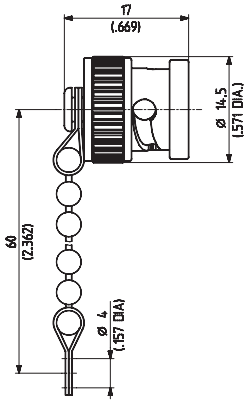



HUBER+SUHNER type	Item no.	Packaging	Notes
62_BNC-0-0-1/-33_-E	22540666	single	protective cap with chain
64_BNC-50-0-1/133_NE	22540681		short circuit with chain

Protective caps for jacks (female)

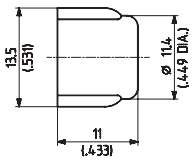

Fig. 1

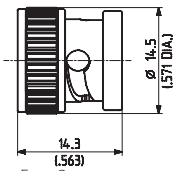

Fig. 2



HUBER+SUHNER type	Item no.	Packaging	Fig.	Notes
62_BNC-0-0-2/---_-H	22540667	bulk 100 pcs.	1	made of plastic
62_BNC-0-0-3/-33_-E	22540669	single	2	

Cable groups see page 32 | Assembly tools see page 531 | Mounting holes/PCB layouts see page 561

L'IMPULSION | Retrouvez nous sur www.limpulsion.fr

Series BNC 75 Ω – coaxial miniature connectors

Description

HUBER+SUHNER BNC 75 Ω featuring a two stud bayonet coupling mechanism which is particularly useful for frequently coupled and uncoupled RF connections. At frequencies up to 1 GHz the small impedance deviation is negligible for most applications.

Compatibility

75 Ω BNC connectors and 50 Ω BNC connectors are intermateable without any restrictions.

Contents

Description	311
Compatibility	311
Interface dimensions in mm/inches	311
Technical data	312
Cable connectors	313
Receptacles with solder end	317
PCB connectors	319
Protective caps and shorts	320

Interface dimensions (mm/inches)

Plug (male)

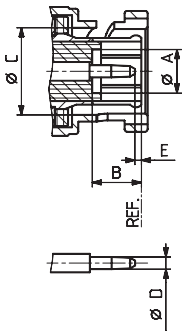

	Plug		Jack	
	min.	max.	min.	max.
A	4.83/0.190	4.97/0.196	-	4.72/0.186
B	5.28/0.208	5.79/0.228	4.72/0.186	5.23/0.206
C	9.78/0.385	9.91/0.390	1.50/0.059 nom.	
D	1.32/0.052	1.37/0.054	2.10/0.827 nom.	
E	0.08/0.003	1.02/0.040	9.60/0.378	9.70/0.382
F	-	4.95/0.195	-	
G	-	8.35/0.328	8.48/0.334	
H	-	-	8.10/0.319	8.15/0.321
I	-	-	10.60/0.417	-

Jack (female)

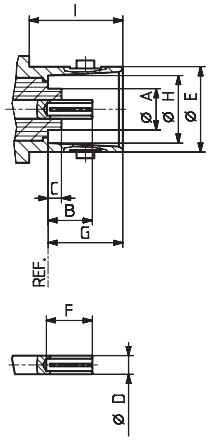

Interface dimensions conformable to the standards:

International: IEC 61169-8

L'IMPULSION
Retrouvez nous sur
www.limpulsion.fr

Series BNC 75 Ω – technical data

Electrical data	Requirements
Impedance	75 Ω
Frequency range	DC to 1 GHz
Dielectric withstanding voltage (at sea level)	1.5 kV rms, 50 Hz (depending on cable)
Working voltage (at sea level)	500 V rms, 50 Hz (depending on cable)
Insulation resistance	≥ 5 • 10^3 MΩ
Contact resistance • Centre contact • Outer contact	 ≤ 1.5 mΩ ≤ 1 mΩ
RF leakage (measured at 1 GHz)	≥ 55 dB

Mechanical data	Requirements
Coupling nut torque	7 to 28 Ncm/0.6 to 2.5 in lbs
Coupling nut retention force	≥ 450 N/101.2 lbs
Contact captivation	≥ 27 N/6.1 lbs
Cable retention force [1]	see pages 32 – 41
Durability (matings)	≥ 500

Environmental data	Requirements
Temperature range	–65 to +165 °C/–85 to +329 °F
Climatic category	IEC → 55/155/21
Thermal shock	MIL-STD-202, method 107, condition B
Moisture resistance	MIL-STD-202, method 106
Corrosion	saltspray test acc. to MIL-STD-202, method 101, condition B
Vibration	MIL-STD-202, method 204, condition B
Shock	MIL-STD-202, method 213, condition G

Material data		
Connector parts	Material	Plating
Bodies	brass	SUCOPLATE®/SUCOPRO® gold plating
Pin contacts	brass	gold/SUCOPRO® gold plating
Socket contacts	copper-beryllium alloy copper alloy	gold/SUCOPRO® gold plating
Crimp ferrules	copper/brass	SUCOPLATE®
Insulators	PTFE or PFA	
Gaskets	silicone rubber	

Performance values are typical for the connector interface. Individual component or connector performance may vary depending on the connector design, attachment (e.g. cable, PCB) or application. For detailed specifications please refer to the specific data sheets on our website www.hubersuhner.com.

[1] Value considers maximum load of the cables without irreversible variations of specifications.

L'IMPULSION | Retrouvez nous sur www.limpulsion.fr

Series BNC 75 Ω – cable connectors

Straight cable plugs (male)

For flexible cables

- Cable entry clamp
- Centre contact soldered



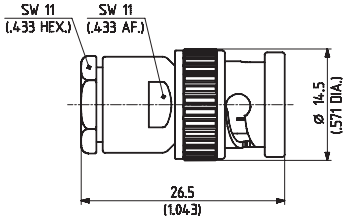

HUBER+SUHNER type	Item no.	Cable group (example)	Packaging	Assembly instruction
11_BNC-75-2-1/133_NE	22543768	U5 (RG_179_B/U, ENVIROFLEX_179)	single	3005
11_BNC-75-4-3/133_NE	22540758	U6 (RG_59_B/U, RADOX_RF_59)		

For flexible cables

- HUBER+SUHNER full crimp
- Taper sleeves see page 554



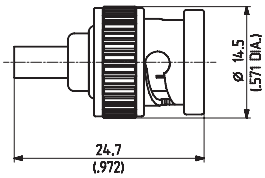

Fig. 1

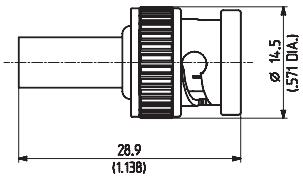

Fig. 2

HUBER+SUHNER type	Item no.	Cable group (example)	Packaging	Assembly instruction	Crimp insert	Fig.
11_BNC-75-2-15/133_NE 11_BNC-75-2-15/133_NH	22641685 22644586	U5 (RG_179_B/U, ENVIROFLEX_179)	single bulk 100 pcs.	9068	1 A	1
11_BNC-75-3-8/133_NE	22540707	U12 (G_03233)	single	3015	2 B	2
11_BNC-75-3-9/133_NE	22540709	U14 (G_03213_D)	single			
11_BNC-75-4-4/133_NE 11_BNC-75-4-4/133_NH	22540761 22544846	U16 (RG_59_B/U, RADOX_RF_59)	single bulk 100 pcs.		2 C	
11_BNC-75-4-6/133_NE 11_BNC-75-4-6/133_NH	22540765 22540766	U18 (G_04133_D)	single bulk 100 pcs.			
11_BNC-75-4-30/133_NE	22544636	U17 (S_04233)	single			

Cable groups see page 32 | Assembly tools see page 531 | Mounting holes/PCB layouts see page 561

L'IMPULSION
Retrouvez nous sur
www.limpulsion.fr

Series BNC 75 Ω – cable connectors

Straight cable plugs (male)

For flexible cables
- HUBER+SUHNER full crimp
- Taper sleeves see page 554

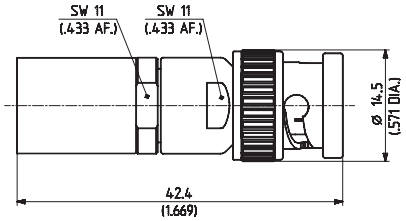



HUBER+SUHNER type	Item no.	Cable group (example)	Packaging	Assembly instruction	Crimp insert
11_BNC-75-7-5/133_NE	22540811	U34 (RG_11_A/U)	single	9120	2D
11_BNC-75-7-6/133_NE	22543960	U36 (G_07273_D)			

Right angle cable plugs (male)

For flexible cables
- Cable entry crimp
- Centre contact soldered
- Taper sleeves see page 554

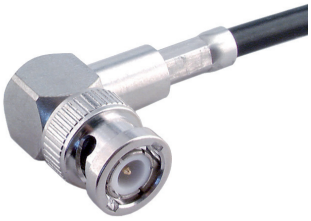

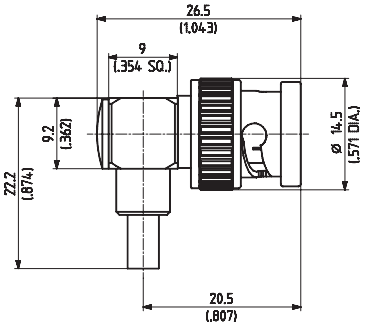

Fig. 1

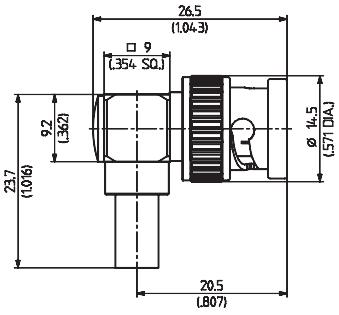

Fig. 2

HUBER+SUHNER type	Item no.	Cable group (example)	Packaging	Assembly instruction	Crimp insert	Fig.
16_BNC-75-2-3/133_NE	22540820	U5 (RG_179_B/U, ENVIROFLEX_179)	single	3079	A	1
16_BNC-75-4-4/133_NE	22540840	U16 (RG_59_B/U, RADOX_RF_59)		3058	C	2

Cable groups see page 32 | Assembly tools see page 531 | Mounting holes/PCB layouts see page 561

L'IMPULSION | Retrouvez nous sur www.limpulsion.fr

Series BNC 75 Ω – cable connectors

Straight cable jacks (female)

For flexible cables
- HUBER+SUHNER full crimp
- Taper sleeves see page 554



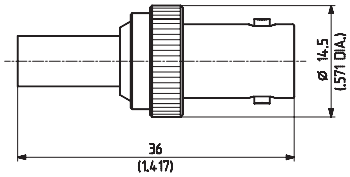

Fig. 1

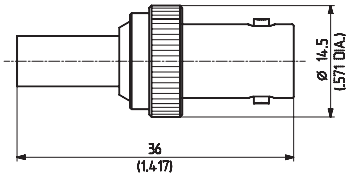

Fig. 2

HUBER+SUHNER type	Item no.	Cable group (example)	Packaging	Assembly instruction	Crimp insert	Fig.
21_BNC-75-2-5/133_NE	22641780	U5 (RG_179_B/U, ENVIROFLEX_179)	single	9068	1A	1
21_BNC-75-4-4/133_NE	22540872	U16 (RG_59_B/U, RADOX_RF_59)	single	3015	2 C	2

Straight bulkhead cable jacks (female)

For flexible cables
- HUBER+SUHNER full crimp
- With panel seal
- Insulating washers see page 556
- Taper sleeves see page 554



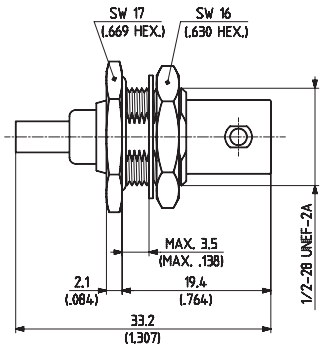

HUBER+SUHNER type	Item no.	Cable group (example)	Packaging	Assembly instruction	Mounting hole	Crimp insert
24_BNC-75-2-6/133_NE 24_BNC-75-2-6/133_NH	22641786 22644569	U5 (RG_179_B/U, ENVIROFLEX_179)	single bulk 100 pcs.	9068	ML 4	1A

Cable groups see page 32 | Assembly tools see page 531 | Mounting holes/PCB layouts see page 561

L'IMPULSION
Retrouvez nous sur
www.limpulsion.fr

Series BNC 75 Ω – cable connectors

Straight bulkhead cable jacks (female)

For flexible cables
- HUBER+SUHNER full crimp
- With panel seal
- Insulating washers see page 556
- Taper sleeves see page 554



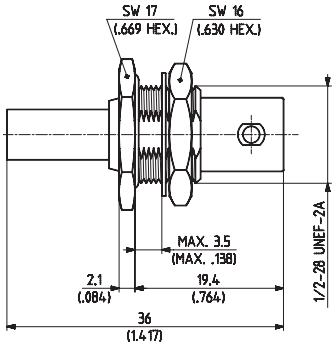

HUBER+SUHNER type	Item no.	Cable group (example)	Packaging	Assembly instruction	Mounting hole	Crimp insert
24_BNC-75-4-3/133_NE	22540930	U16 (RG_59_B/U, RADOX_RF_59)	single	3015	ML 4	2 C

Straight panel cable jacks (female)

For flexible cables
- HUBER+SUHNER full crimp
- Taper sleeves see page 554

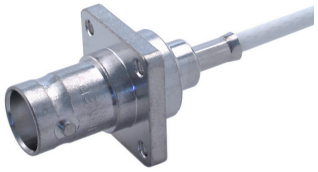

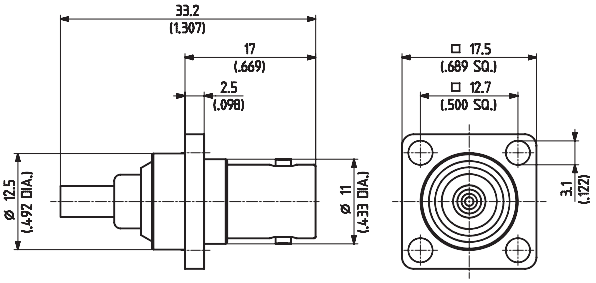

Fig. 1

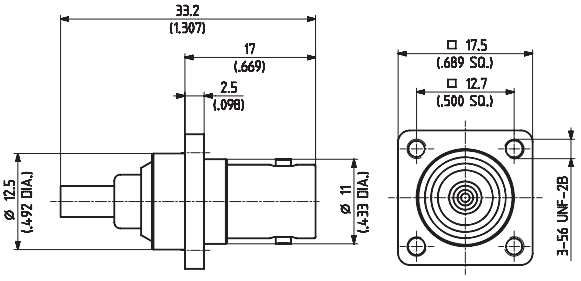

Fig. 2

HUBER+SUHNER type	Item no.	Cable group (example)	Packaging	Assembly instruction	Crimp insert	Fig.
25_BNC-75-2-7/133_NE	22641790	U5 (RG_179_B/U, ENVIROFLEX_179)	single	9068	1 A	1
25_BNC-75-2-8/133_NE	22641791					2[1]

[1] mounting also possible with screws ISO M 2.5

Cable groups see page 32 | Assembly tools see page 531 | Mounting holes/PCB layouts see page 561

L'IMPULSION | Retrouvez nous sur www.limpulsion.fr

Series BNC 75 Ω – receptacles with solder end

Receptacles, jacks (female)

- Bulkhead mounted
- With panel seal
- Solder tags see page 557
- Insulating washers see page 556



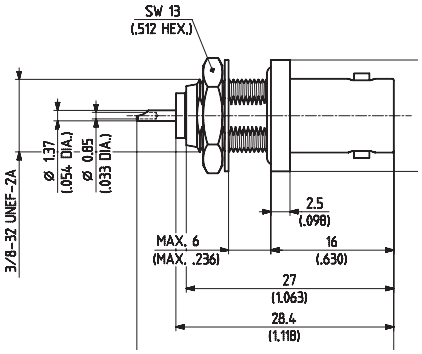

HUBER+SUHNER type	Item no.	Packaging	Mounting hole
22_BNC-75-0-1/133_NE	22540883	single	ML 1

- Bulkhead mounted
- Solder tags see page 557
- Insulating washers see page 556



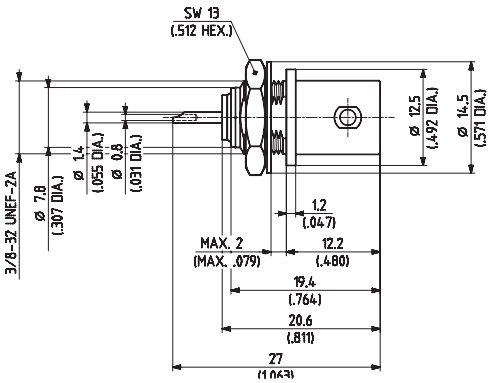

HUBER+SUHNER type	Item no.	Packaging	Mounting hole	Notes
22_BNC-75-0-4/133_NE	22540889	single	ML 2	without panel seal

Cable groups see page 32 | Assembly tools see page 531 | Mounting holes/PCB layouts see page 561

L'IMPULSION
Retrouvez nous sur
www.limpulsion.fr

Series BNC 75 Ω – receptacles with solder end

Receptacles, jacks (female)

- Panel mounted

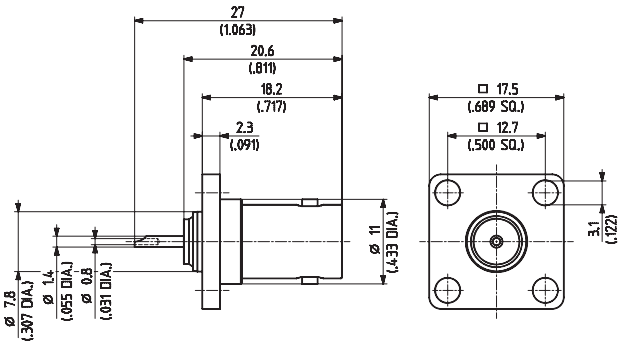



HUBER+SUHNER type	Item no.	Packaging	Mounting hole
23_BNC-75-0-10/133_NE	22540906	single	ML 6

Cable groups see page 32 | Assembly tools see page 531 | Mounting holes/PCB layouts see page 561

L'IMPULSION | Retrouvez nous sur www.limpulsion.fr

Series BNC 75 Ω – PCB connectors

Straight PCB jacks (female)



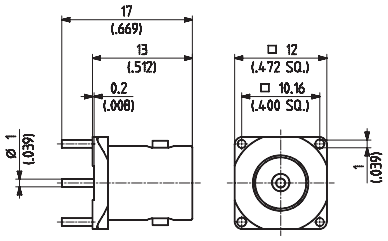

HUBER+SUHNER type	Item no.	Packaging	Mounting hole	Plating body
82_BNC-75-0-2/122_NE	22643586	single	ML 49	nickel
82_BNC-75-0-2/122_NH	22646624	bulk 100 pcs.		

Right angle PCB jacks (female)



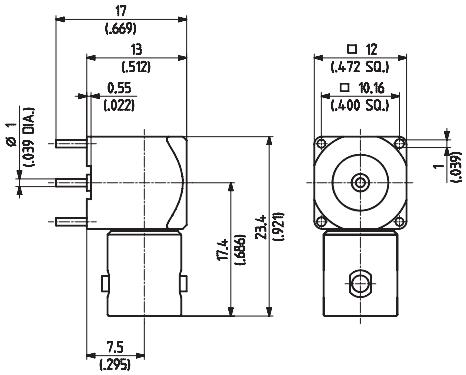

HUBER+SUHNER type	Item no.	Packaging	Mounting hole
85_BNC-75-0-1/133_NE	22641623	single	ML 49

Cable groups see page 32 | Assembly tools see page 531 | Mounting holes/PCB layouts see page 561

L'IMPULSION
Retrouvez nous sur
www.limpulsion.fr

Series BNC 75 Ω – protective caps and shorts

Protective cap for plugs (male)

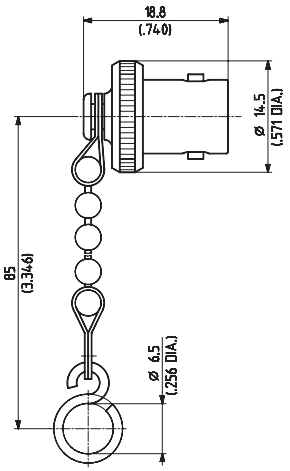



HUBER+SUHNER type	Item no.	Packaging	Notes
61_BNC-0-0-1/-33_-E	22540660	single	with chain and loop

Protective cap for jacks (female)

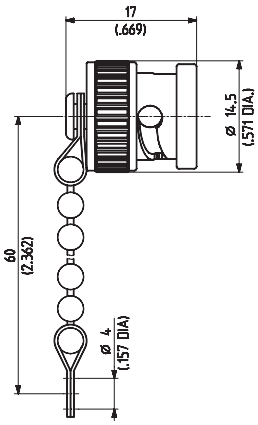



HUBER+SUHNER type	Item no.	Packaging	Notes
62_BNC-0-0-1/-33_-E	22540666	single	with chain

Cable groups see page 32 | Assembly tools see page 531 | Mounting holes/PCB layouts see page 561

L'IMPULSION | Retrouvez nous sur www.limpulsion.fr

Series BNC 75 Ω – protective caps and shorts

Protective caps for jacks (female)

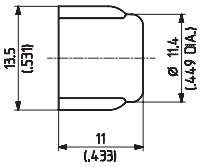

Fig. 1

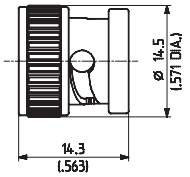

Fig. 2



HUBER+SUHNER type	Item no.	Packaging	Fig.	Notes
62_BNC-0-0-2/-_-H	22540667	bulk 100 pcs.	1	made of plastic
62_BNC-0-0-3/-33_-E	22540669	single	2	

Cable groups see page 32 | Assembly tools see page 531 | Mounting holes/PCB layouts see page 561

L'IMPULSION
Retrouvez nous sur
www.limpulsion.fr

L'IMPULSION
Retrouvez nous sur
www.limpulsion.fr

Series BNC "real" 75 Ω connectors

Description

"Real" 75 Ω BNC connectors are suitable for applications up to 3 GHz, contrary to the conventional 75 Ω BNC connector types, which are applicable up to 1 GHz only. With our HUBER+SUHNER full crimp technique, they can be assembled quick and easy to all convenient cable types. Thanks to good electrical properties they are suitable for different applications, such as broadcast, telecommunication, etc.

Content

Description	323
Compatibility	323
Properties	323
Benefits	323
Technical data	324
Cable connectors	326
Receptacles with solder end	328

Compatibility

Mechanically they are mateable with all conventional BNC connectors (50 Ω and 75 Ω).

Properties

- True 75 Ω impedance
- DC to 3 GHz
- Good return loss properties

Benefits

- Fast and easy mounting (HUBER+SUHNER full crimp)
- Intermateable with standard BNC 50 Ω and BNC 75 Ω connectors



L'IMPULSION
Retrouvez nous sur
www.limpulsion.fr

Series BNC "real" 75 Ω – technical data

Electrical data	Requirements
Impedance	75 Ω
Frequency range	DC to 3 GHz
Return loss	see table below
Dielectric withstanding voltage (at sea level)	1.5 kV rms, 50 Hz (depending on cable)
Working voltage (at sea level)	500 V rms, 50 Hz (depending on cable)
Insulation resistance	≥ 5 • 10^3 MΩ
Contact resistance • Centre conductor • Outer conductor	 ≤ 1.5 mΩ ≤ 1.0 mΩ

Connector type	Typical RL (dB) values			Cable
	1 GHz	2 GHz	3 GHz	
Straight cable plugs (11_BNC-75-..)	30	28	24	Draka 0.6/2.8
	30	28	24	Draka 0.8/3.7 AF
	30	28	-	G_04233_D [1]
	30	28	24	Draka 1.0/4.8 AF
Right angle cable plug (16_BNC-75-..)	28	21	-	G_04233_D [1]
Straight bulkhead cable jacks (24_BNC-75-..)	35	24	24	Draka 0.8/3.7 AF
	30	25	-	G_04233_D [1]
	35	26	24	Draka 1.0/4.8 AF

Mechanical data	Requirements
Coupling nut torque	7 to 28 Ncm/0.6 to 2.5 in lbs
Coupling nut retention force	≥ 450 N/101.2 lbs
Contact captivation	≥ 27 N/6.1 lbs
Durability (matings)	500

Environmental data	Requirements
Temperature range	–65 to +165 °C/–85 to +329 °F
Climatic category IEC	55/155/21
Thermal shock	MIL-STD-202, method 107, condition B
Moisture resistance	MIL-STD-202, method 106
Corrosion	Saltspray test acc. to MIL-STD-202, method 101, condition B
Vibration	MIL-STD-202, method 204, condition B
Shock	MIL-STD-202, method 213, condition G

Performance values are typical for the connector interface. Individual component or connector performance may vary depending on the connector design, attachment (e.g. cable, PCB) or application. For detailed specifications please refer to the specific data sheets on our website www.hubersuhner.com.

[1] For applications up to 2 GHz

L'IMPULSION | Retrouvez nous sur www.limpulsion.fr

Series BNC "real" 75 Ω – technical data

Material data		
Connector part	Material	Plating
Bodies	brass/spring bronze	SUCOPLATE®
Pin contacts	brass	gold/SUCOPRO® gold plating
Socket contacts	copper-beryllium alloy	gold/SUCOPRO® gold plating
Crimp ferrules	copper	SUCOPLATE®
Insulators	PTFE or PFA	
Gaskets	silicon rubber	

Performance values are typical for the connector interface. Individual component or connector performance may vary depending on the connector design, attachment (e.g. cable, PCB) or application. For detailed specifications please refer to the specific data sheets on our website www.hubersuhner.com.

L'IMPULSION
Retrouvez nous sur
www.limpulsion.fr

Series BNC "real" 75 Ω – cable connectors

Straight cable plugs (male)

For flexible cables
- Cable entry clamp
- HUBER+SUHNER full crimp

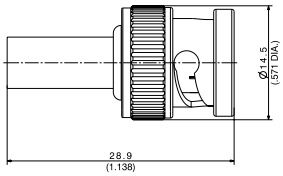

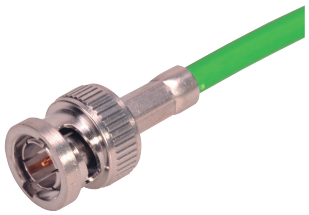

HUBER+SUHNER type	Item no.	Cable group (example)	Packaging	Assembly instruction	Crimp insert [1]
11_BNC-75-3-38/133_NE	84070521	Draka 0.6/2.8	single	0000270344	76_Z-0-3-26
11_BNC-75-4-40/133_NE	84112535	U18 (G_04133_D)		0000270231	76_Z-0-4-24
11_BNC-75-5-20/133_NE	84070641	Draka 1.0/4.8 AF		0000270280	76_Z-0-5-22

Right angle cable plugs (male)

For flexible cables
- Cable entry crimp
- Center contact soldered

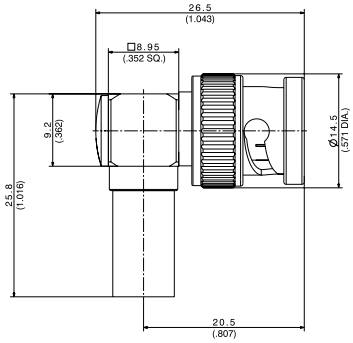



HUBER+SUHNER type	Item no.	Cable group (example)	Packaging	Assembly instruction	Crimp insert [1]
16_BNC-75-4-14/133_NE	84135532	U18 (G_04133_D)	single	3058	76_Z-0-4-24

[1] Suitable for the large HUBER+SUHNER crimping tool

Cable groups see page 32 | Assembly tools see page 531 | Mounting holes/PCB layouts see page 561

L'IMPULSION
Retrouvez nous sur
www.limpulsion.fr

Series BNC "real" 75 Ω – cable connectors

Straight bulkhead cable jacks (female)

For flexible cables
- HUBER+SUHNER full crimp
- Mounting hole ML 4
- Panel thickness max. 3.5 mm



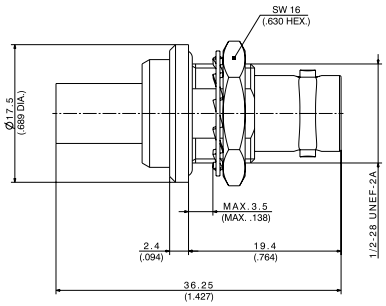

Fig. 1

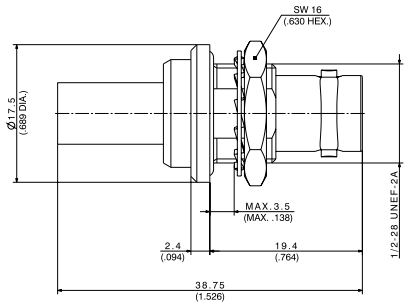

Fig. 2

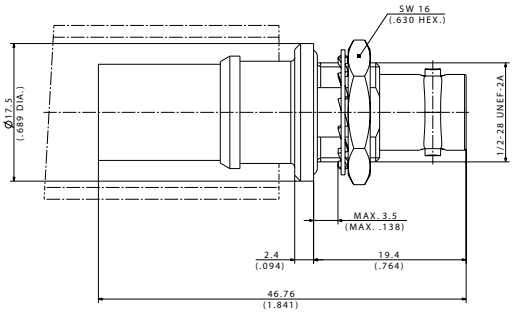

Fig. 3

HUBER+SUHNER type	Item no.	Cable group (example)	Packaging	Assembly instruction	Crimp insert [1]	Fig.
24_BNC-75-4-18/133_NE	84135127	Draka 0.8/3.7 AF	single	0000365601	76_Z-0-4-24	1
24_BNC-75-5-7/133_NE	84135216	Draka 1.0/4.8 AF		0000365714	76_Z-0-5-22	2
24_BNC-75-7-5/133_NE	85025799	X33 (SPUMA_400-FR-75)		0000468773	76_Z-0-7-1	3

[1] Suitable for the large HUBER+SUHNER crimping tool

Cable groups see page 32 | Assembly tools see page 531 | Mounting holes/PCB layouts see page 561

L'IMPULSION
Retrouvez nous sur
www.limpulsion.fr

Receptacles with solder end

Receptacles, jacks (female)

- Bulkhead mounted
- Flange with O-ring



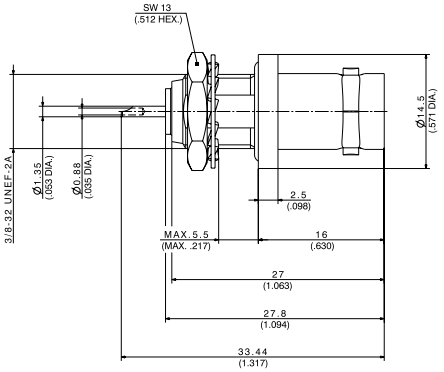

HUBER+SUHNER type	Item no.	Packaging	Mounting hole	Panel thickness
22_BNC-75-0-16/133_NE	84135058	single	ML 1	5.5 mm max.

Cable groups see page 32 | Assembly tools see page 531 | Mounting holes/PCB layouts see page 561

L'IMPULSION | Retrouvez nous sur www.limpulsion.fr

Series TNC 50 Ω – coaxial miniature connectors

Description

HUBER+SUHNER TNC connectors are threaded RF connectors applicable from DC up to 11 GHz. The threaded coupling mechanism improves control over the interface dimensions and allows them to be used under a higher environmental load than BNC, especially under a high vibration load.

Compatibility

50 Ω TNC connectors and 75 Ω TNC connectors are intermateable without restrictions.

Content

Description	329
Compatibility	329
Interface dimensions in mm/inches	329
Technical data	330
Cable connectors	331
Receptacles with solder end	340
Protective caps and shorts	343

Interface dimensions (mm/inches)

Plug (male)

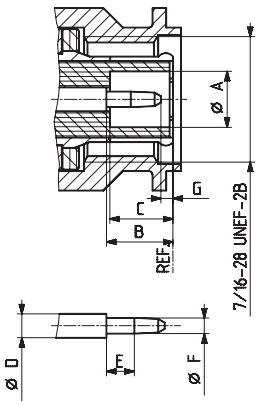

	Plug		Jack	
	min.	max.	min.	max.
A	4.83/0.190	-	-	4.72/0.186
B	5.33/0.210	5.84/0.230	4.72/0.186	5.23/0.206
C	5.28/0.208	5.79/0.228	4.78/0.188	5.28/0.208
D	2.06/0.081	2.21/0.087	2.06/0.081	2.21/0.087
E	1.98/0.078	-	4.95/0.195	-
F	1.32/0.052	1.37/0.054	9.60/0.378	9.70/0.382
G	0.08/0.003	-	8.31/0.327	8.51/0.335
H	-	-	8.10/0.319	8.15/0.321
I	-	-	10.52/0.414	-

Jack (female)

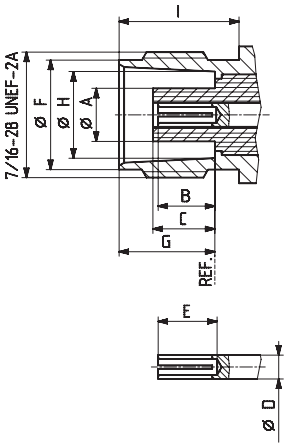

Interface dimensions conformable to the standards:

International:	IEC 60169-17
Europe:	CECC 22 200
USA:	MIL-PRF-39012
	TNC-Interface MIL-STD-348/313

L'IMPULSION
Retrouvez nous sur
www.limpulsion.fr

Series TNC 50 Ω – technical data

Electrical data	Requirements
Impedance	50 Ω
Frequency range	DC to 11 GHz
Dielectric withstanding voltage (at sea level)	1.5 kV rms, 50 Hz (depending on cable)
Working voltage (at sea level) • Unmated	 500 V rms, 50 Hz (depending on cable)
Insulation resistance	≥ 5 • 10^3 MΩ
Contact resistance • Centre contact • Outer contact	 ≤ 1.5 mΩ ≤ 1 mΩ
RF leakage (between 2 and 3 GHz)	≥ 60 dB

Mechanical data	Requirements
Coupling nut torque • Recommended	 46 to 69 Ncm/4.1 to 6.1 in lbs
Coupling nut retention force	≥ 450 N/101.2 lbs
Contact captivation	≥ 27 N/6.1 lbs
Cable retention force [1]	see pages 32 – 41
Durability (matings)	≥ 500

Environmental data	Requirements
Temperature range	–65 to +165 °C/–85 to +329 °F
Climatic category	IEC → 55/155/21
Thermal shock	MIL-STD-202, method 107, condition B
Moisture resistance	MIL-STD-202, method 106
Corrosion	saltspray test acc. to MIL-STD-202, method 101, condition B
Vibration	MIL-STD-202, method 204, condition B
Shock	MIL-STD-202, method 213, condition G

Material data		
Connector parts	Material	Plating
Bodies	brass	SUCOPLATE®
Pin contacts	brass	gold/SUCOPRO® gold plating
Socket contacts	copper beryllium alloy copper alloy	gold/SUCOPRO® gold plating
Crimp ferrules	copper/brass	SUCOPLATE®
Insulators	PTFE or PFA	
Gaskets	silicone rubber	

Performance values are typical for the connector interface. Individual component or connector performance may vary depending on the connector design, attachment (e.g. cable, PCB) or application. For detailed specifications please refer to the specific data sheets on our website www.hubersuhner.com.

[1] Value considers maximum load of the cables without irreversible variations of specifications.

L'IMPULSION
Retrouvez nous sur
www.limpulsion.fr

Series TNC 50 Ω – cable connectors

Straight cable plugs (male)

For semi-rigid cables

- Cable entry soldered
- Centre contact soldered



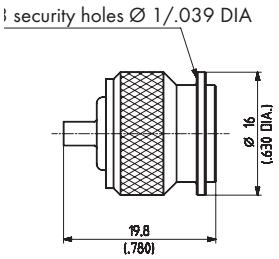

Fig. 1

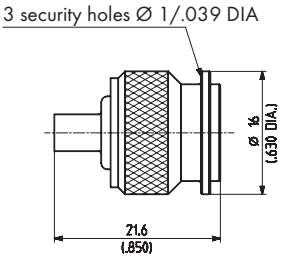

Fig. 2

HUBER+SUHNER type	Item no.	Cable group (example)	Packaging	Assembly instruction	Fig.	Notes
11_TNC-50-2-20/103_NE [1]	22642519	Y3, Y11, Y16 (EZ_86)	single	9100	1	
11_TNC-50-3-29/103_NE [1] 11_TNC-50-3-29/113_NE [1]	22641997 22544841	Y5, Y12 (EZ_141)		9106	2	outer contact silver outer contact gold

For flexible cables

- Cable entry clamp
- Centre contact soldered



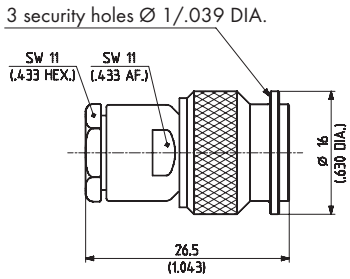

HUBER+SUHNER type	Item no.	Cable group (example)	Packaging	Assembly instruction
11_TNC-50-2-1/133_NE	22640783	U2 (RG_316_/U, ENVIROFLEX_316)	single	3005
11_TNC-50-3-5/133_NE	22640798	U7, U9, U11 (RG_58_C/U, ENVIROFLEX_B58)		3005
11_TNC-50-3-6/133_NE [1]	22543475	U7, U9, U11 (RG_58_C/U, ENVIROFLEX_B58)		3004

[1] Centre contact NOT captivated

Cable groups see page 32 | Assembly tools see page 531 | Mounting holes/PCB layouts see page 561

L'IMPULSION
Retrouvez nous sur
www.limpulsion.fr

Series TNC 50 Ω – cable connectors

Straight cable plugs (male)

For flexible cables

- Cable entry clamp
- Centre contact soldered



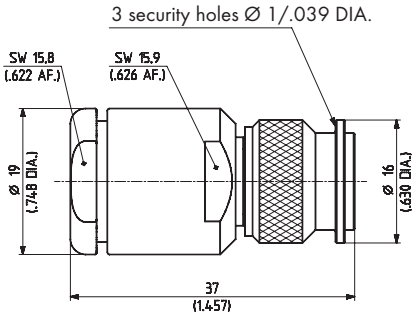

HUBER+SUHNER type	Item no.	Cable group (example)	Packaging	Assembly instruction
11_TNC-50-7-2/133_NE	22640466	U29 (RG_213_/U, RADOX_RF_213) U32 (RG_214_/U, ENVIROFLEX_B214)	single	3008

For flexible cables

- HUBER+SUHNER full crimp
- Taper sleeves see page 554



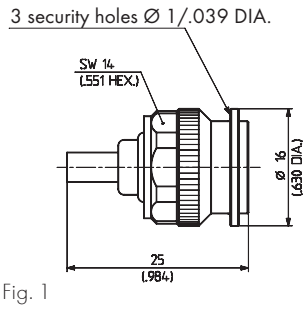

Fig. 1

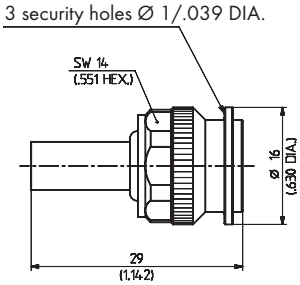

Fig. 2

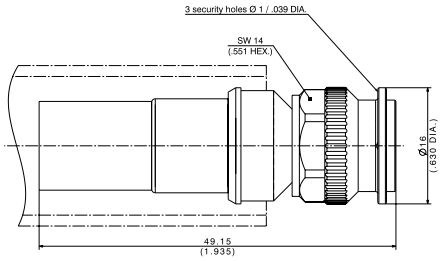

Fig. 3

HUBER+SUHNER type	Item no.	Cable group (example)	Packaging	Assembly instruction	Crimp insert	Fig.
11_TNC-50-2-112/133_NE	23001710	U2 (RG_316_/U, ENVIROFLEX_316)	single	27215	1 A	1
11_TNC-50-2-113/133_NE	23001711	U4 (K_02252_D, ENVIROFLEX_316_D)	single			
11_TNC-50-3-115/133_NE 11_TNC-50-3-115/133_NH	23001712 23001713	U9, U39 (RG_223_/U, ENVIROFLEX_B223)	single bulk 100 pcs.	3015	2 B	2
11_TNC-50-3-116/133_NE 11_TNC-50-3-116/133_NH	23001714 23001715	U7 (RG_58_C/U, ENVIROFLEX_B58)	single bulk 100 pcs.			
11_TNC-50-3-117/133_NE	23010015	U11, U41 (RG_400_/U, ENVIROFLEX_400)	single			
11_TNC-50-7-18/133_NE	84077868	U30, X32 (SPUMA_400, SPUMA_400-FR-01, SPUMA_400-RS-FR)	single	0000184567	4 D	3

Cable groups see page 32 | Assembly tools see page 531 | Mounting holes/PCB layouts see page 561

L'IMPULSION
Retrouvez nous sur
www.limpulsion.fr

Series TNC 50 Ω – cable connectors

Straight cable plugs (male)

For flexible cables

- Cable entry crimp
- Centre contact plugged



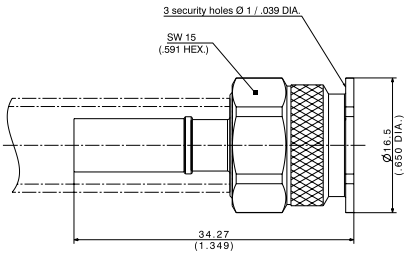

Fig. 1

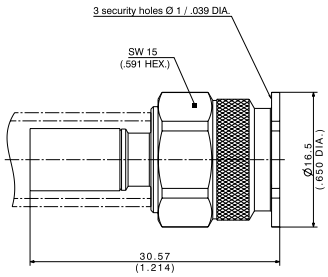

Fig. 2

HUBER+SUHNER type	Item no.	Cable group (example)	Packaging	Assembly instruction	Crimp insert	Fig.
11_TNC-50-3-120/133_NE	84010745	X27 (SPUMA_195, SPUMA_195-FR-01)	single	0000417754	B	1
11_TNC-50-4-77/133_NE	85010169	X28 (SPUMA_240, SPUMA_240-FR-01)		0000416857	C	2

Cable groups see page 32 | Assembly tools see page 531 | Mounting holes/PCB layouts see page 561

L'IMPULSION
Retrouvez nous sur
www.limpulsion.fr

Series TNC 50 Ω – cable connectors

Right angle cable plugs (male)

For flexible cables

- Cable entry clamp
- Centre contact soldered

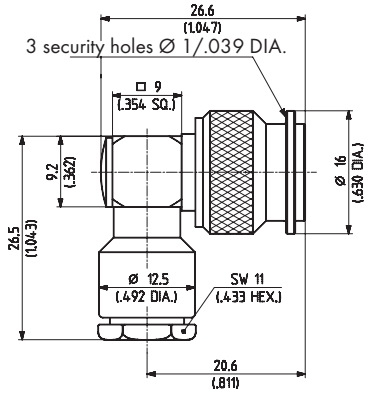

Fig. 1

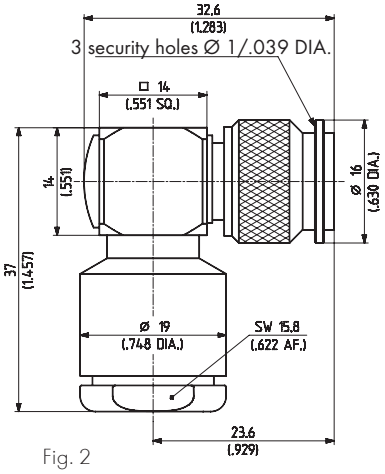

Fig. 2

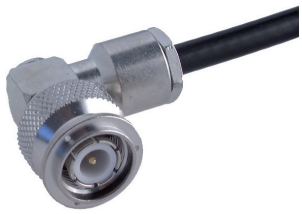

HUBER+SUHNER type	Item no.	Cable group (example)	Packaging	Assembly instruction	Fig.
16_TNC-50-3-28/133_NE	84012481	U7, U9, U11 (RG 58_C/U, ENVIROFLEX_B58)	single	3024	1
16_TNC-50-7-4/133_NE	22651587	U29 (RG_213_/U, RADOX_RF_213) U32 (RG 214_/U, ENVIROFLEX_B214)	single	3003	2

For flexible cables

- Cable entry crimp
- Centre contact soldered
- Taper sleeves see page 554

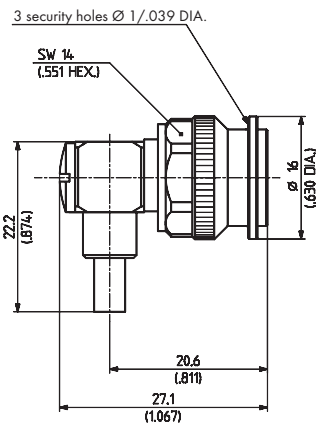



HUBER+SUHNER type	Item no.	Cable group (example)	Packaging	Assembly instruction	Crimp insert
16_TNC-50-2-119/133_NE	23010087	U2 (RG_316_/U, ENVIROFLEX_316)	single	27216	A
16_TNC-50-2-7/133_NE	23001716	U4 (K_02252_D, ENVIROFLEX_316_D)			

Cable groups see page 32 | Assembly tools see page 531 | Mounting holes/PCB layouts see page 561

L'IMPULSION | Retrouvez nous sur www.limpulsion.fr

Series TNC 50 Ω – cable connectors

Right angle cable plugs (male)

For flexible cables

- HUBER+SUHNER full crimp
- Taper sleeves see page 554

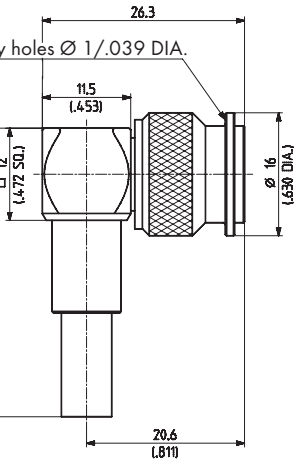



HUBER+SUHNER type	Item no.	Cable group (example)	Packaging	Assembly instruction	Crimp insert
16_TNC-50-3-13/133_NE	22640492	U7 (RG_58_C/U, ENVIROFLEX_B58)	single	0000335265	2 B
16_TNC-50-3-18/133_NE	22543606	U9, U39 (RG_223_/U, ENVIROFLEX_B223)			

For flexible cables

- Cable entry crimp
- Centre contact soldered
- Taper sleeves see page 554

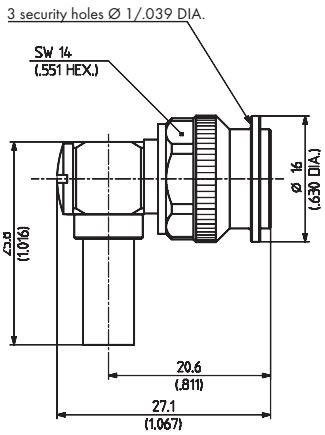



HUBER+SUHNER type	Item no.	Cable group (example)	Packaging	Assembly instruction	Crimp insert
16_TNC-50-3-111/133_NE	23001717	U9 (RG_223_/U, ENVIROFLEX_B223)	single	27218	B
16_TNC-50-3-112/133_NE	23010115	U7 (RG_58_C/U, ENVIROFLEX_B58)	single		

Cable groups see page 32 | Assembly tools see page 531 | Mounting holes/PCB layouts see page 561

Series TNC 50 Ω – cable connectors

Straight cable jacks (female)

For flexible cables

- Cable entry clamp
- Centre contact soldered



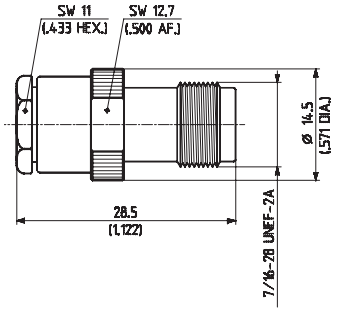

HUBER+SUHNER type	Item no.	Cable group (example)	Packaging	Assembly instruction
21_TNC-50-2-2/133_NE	22640515	U2 (RG_316_/U, ENVIROFLEX_316)	single	3005
21_TNC-50-3-4/133_NE	22640523	U7, U9 (RG_58_C/U, ENVIROFLEX_B58)		

For flexible cables

- HUBER+SUHNER full crimp
- Taper sleeves see page 554



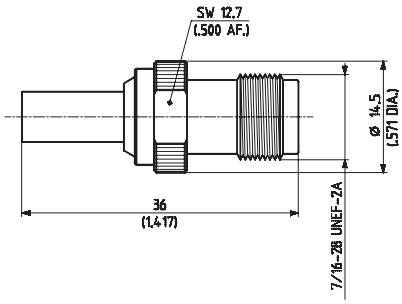

Fig. 1

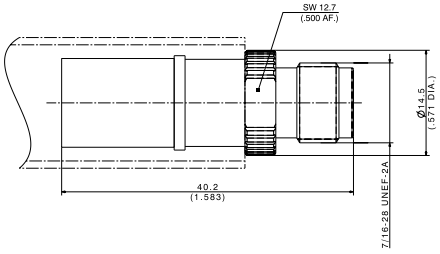

Fig. 2

HUBER+SUHNER type	Item no.	Cable group (example)	Packaging	Assembly instruction	Crimp insert	Fig.
21_TNC-50-3-31/133_NE	84016544	U7 (RG_58_C/U, ENVIROFLEX_B58)	single	0000231215	2 B	1
21_TNC-50-3-32/133_NE	84016601	U9, U39 (RG_223_/U, ENVIROFLEX_B223)		0000231453		
21_TNC-50-7-1/133_NE	84128527	U30, X32 (SPUMA_400, SPUMA_400-FR-01, SPUMA_400-RS-FR)	single	0000345941	4 D	2

Cable groups see page 32 | Assembly tools see page 531 | Mounting holes/PCB layouts see page 561

L'IMPULSION | Retrouvez nous sur www.limpulsion.fr

Series TNC 50 Ω – cable connectors

Straight bulkhead cable jacks (female)

For semi-rigid cables

- Cable entry soldered
- With panel seal
- Insulating washers see page 556

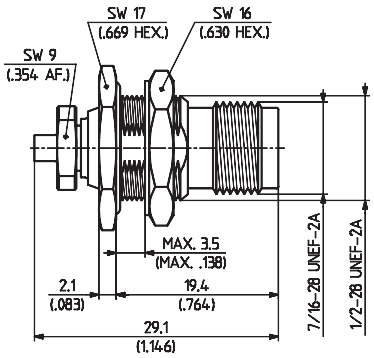

Fig. 1

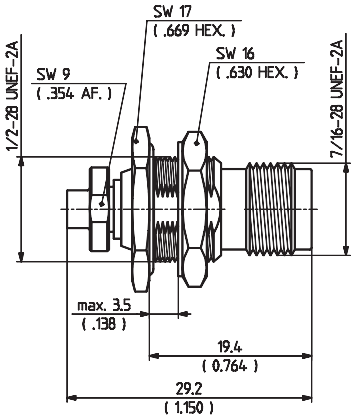

Fig. 2



HUBER+SUHNER type	Item no.	Cable group (example)	Packaging	Assembly instruction	Mounting hole	Fig.
24_TNC-50-2-31/133_NE [1]	23001721	Y3, Y11 (EZ_86)	single	27269	ML 4	1
24_TNC-50-3-30/133_NH [1]	23001723	Y5, Y12 (EZ_141)	bulk 100 pcs.	27220		2

For flexible cables

- Cable entry clamp
- Centre contact soldered
- With panel seal
- Insulating washers see page 556



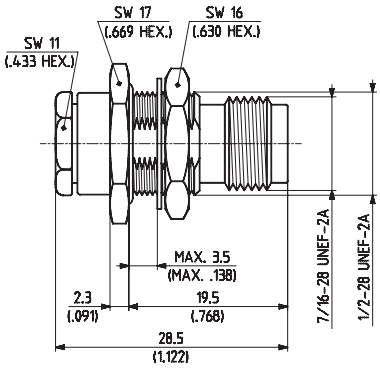

HUBER+SUHNER type	Item no.	Cable group (example)	Packaging	Assembly instruction	Mounting hole
24_TNC-50-2-1/133_NE	22543398	U2 (RG_316_/U, ENVIROFLEX_316)	single	3005	ML 4

[1] Centre contact NOT captivated.

Cable groups see page 32 | Assembly tools see page 531 | Mounting holes/PCB layouts see page 561

L'IMPULSION
Retrouvez nous sur
www.limpulsion.fr

Series TNC 50 Ω – cable connectors

Straight bulkhead cable jacks (female)

For flexible cables

- HUBER+SUHNER full crimp
- With panel seal
- Taper sleeves see page 554
- Insulating washers se page 556



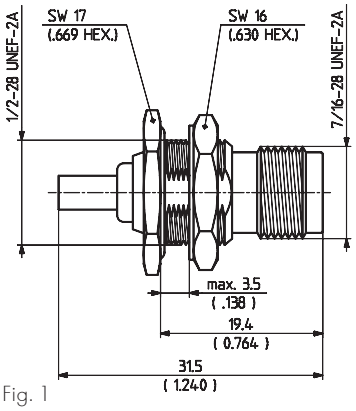

Fig. 1

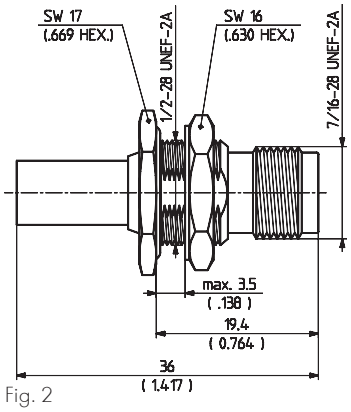

Fig. 2

HUBER+SUHNER type	Item no.	Cable group (example)	Packaging	Assembly instruction	Mounting hole	Crimp insert	Fig.
24_TNC-50-2-27/133_NE	23001719	U2 (RG_316_/U, ENVIROFLEX_316)	single	9068	ML 4	1 A	1
24_TNC-50-2-29/133_NH	23001720	U4 (K_02252_D, ENVIROFLEX_316_D)	bulk 100 pcs.				
24_TNC-50-3-21/133_NE	23001722	U9 (RG_223_/U, ENVIROFLEX_B223)	single	27221	ML 4	2 B	2
24_TNC-50-3-23/133_NE	23010150	U7 (RG_58_C/U, ENVIROFLEX_B58)	single				

For flexible cables

- Cable entry crimp
- Center contact plugged
- With panel seal
- Taper sleeves see page 554
- Insulating washers se page 556



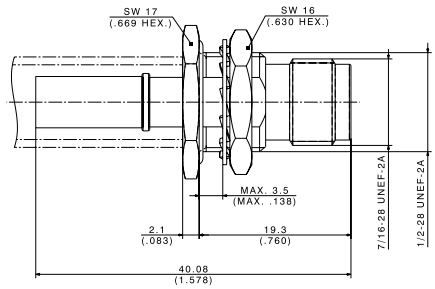

Fig. 1

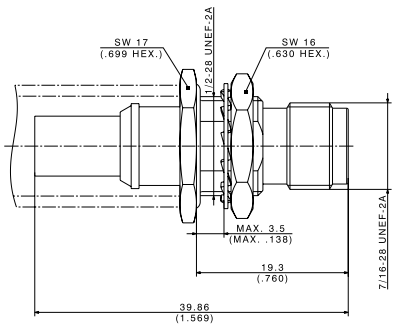

Fig. 2

HUBER+SUHNER type	Item no.	Cable group (example)	Packaging	Assembly instruction	Mounting hole	Crimp insert	Fig.
24_TNC-50-3-54/133_NE	84010762	X27 (SPUMA_195, SPUMA_195-FR-01)	single	0000417644	ML 4	B	1
24_TNC-50-4-77/133_NE	85010236	X28 (SPUMA_240, SPUMA_240-FR-01)		0000416856	ML 4	C	2

Cable groups see page 32 | Assembly tools see page 531 | Mounting holes/PCB layouts see page 561

L'IMPULSION | Retrouvez nous sur www.limpulsion.fr

Series TNC 50 Ω – cable connectors

Straight panel cable jacks (female)

For flexible cables

- Cable entry clamp
- Center contact soldered



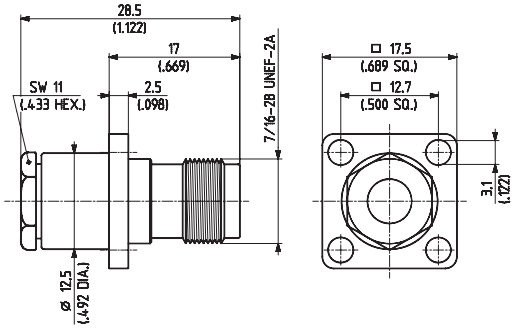

HUBER+SUHNER type	Item no.	Cable group (example)	Packaging	Assembly instruction	Mounting hole
25_TNC-50-2-1/133_NE	22640578	U2 (RG_316_/U, ENVIROFLEX_316)	single	3005	ML 8
25_TNC-50-3-9/133_NE	22643707	U7, U9 (RG_58_C/U, ENVIROFLEX_B58)			

For flexible cables

- HUBER+SUHNER full crimp
- Taper sleeves see page 554



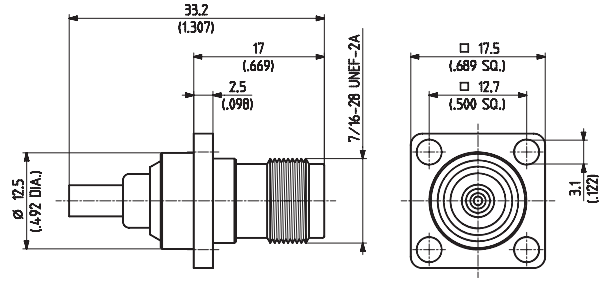

Fig. 1

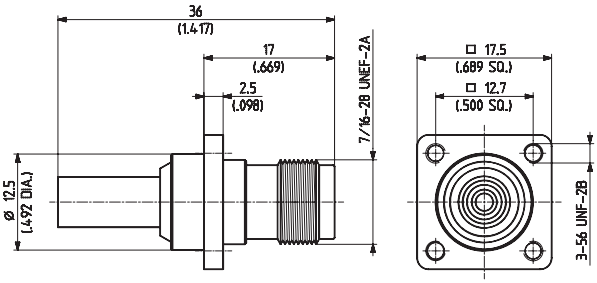

Fig. 2

HUBER+SUHNER type	Item no.	Cable group (example)	Packaging	Mounting hole	Crimp insert	Fig.
25_TNC-50-2-19/133_NE	84016723	U2 (RG_316_/U, ENVIROFLEX_316)	single	ML 8	1 A	1
25_TNC-50-3-19/133_NE	84016722	U7 (RG_58_C/U, ENVIROFLEX_B58)			2 B	2 [1]

[1] Mounting also possible with screws ISO M 2.5

Cable groups see page 32 | Assembly tools see page 531 | Mounting holes/PCB layouts see page 561

Series TNC 50 Ω – receptacles with solder end

Receptacles, plugs (male)

- Bulkhead mounted
- With panel seal
- Insulating washers see page 556
- Solder tags see page 557



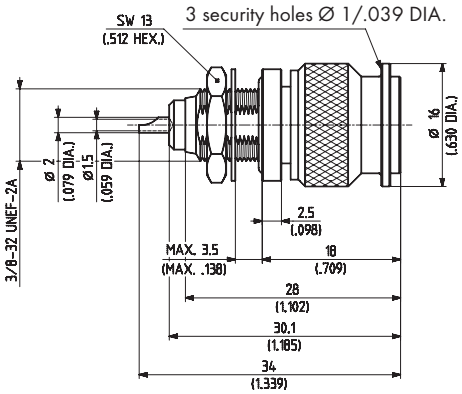

HUBER+SUHNER type	Item no.	Packaging	Mounting hole
12_TNC-50-0-1/133_NE	22640467	single	ML 2

Receptacles, jacks (female)

- Bulkhead mounted
- Insulating washers see page 556
- Solder tags see page 557



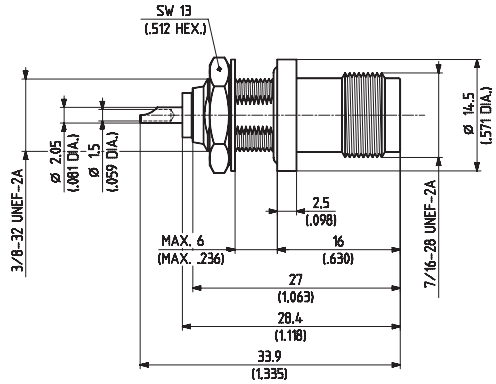

Fig. 1

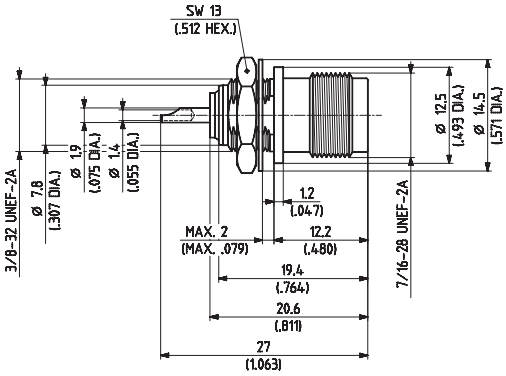

Fig. 2

HUBER+SUHNER type	Item no.	Packaging	Mounting hole	Fig.	Notes
22_TNC-50-0-1/133_NE	22640537	single	ML 1	1	with panel seal
22_TNC-50-0-2/133_NE	22640539		ML 2	2	

Cable groups see page 32 | Assembly tools see page 531 | Mounting holes/PCB layouts see page 561

L'IMPULSION
Retrouvez nous sur
www.limpulsion.fr

Series TNC 50 Ω – receptacles with solder end

- Panel mounted



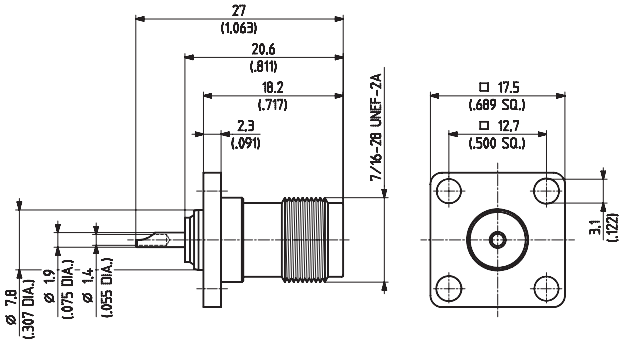

HUBER+SUHNER type	Item no.	Packaging	Mounting hole
23_TNC-50-0-2/133_NE	22640549	single	ML 6
23_TNC-50-0-2/133_NH	22644322	bulk 100 pcs.	

- Panel mounted



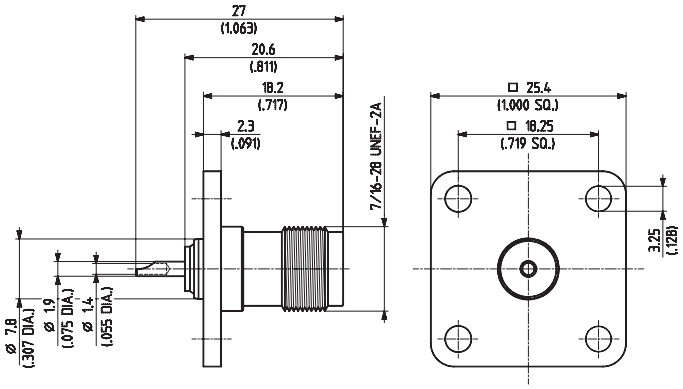

HUBER+SUHNER type	Item no.	Packaging	Mounting hole	Notes
23_TNC-50-0-6/133_NE	22640551	single	ML 5	suitable for Sucobox applications, see page 558

Cable groups see page 32 | Assembly tools see page 531 | Mounting holes/PCB layouts see page 561

L'IMPULSION
Retrouvez nous sur
www.limpulsion.fr

Series TNC 50 Ω – receptacles with solder end

Right angle receptacle, jack (female)

- Bulkhead mounted
- With panel seal
- Insulating washers see page 556
- Solder tags see page 557



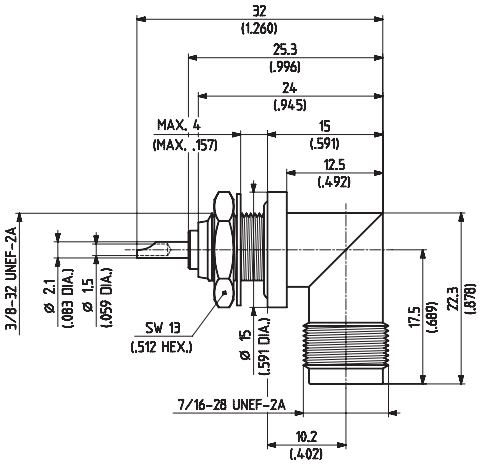

HUBER+SUHNER type	Item no.	Packaging	Mounting hole
27_TNC-50-0-1/133 NE	22543405	single	ML 2

Cable groups see page 32 | Assembly tools see page 531 | Mounting holes/PCB layouts see page 561

L'IMPULSION | Retrouvez nous sur www.limpulsion.fr

Series TNC 50 Ω – protective caps and shorts

Protective cap for plugs

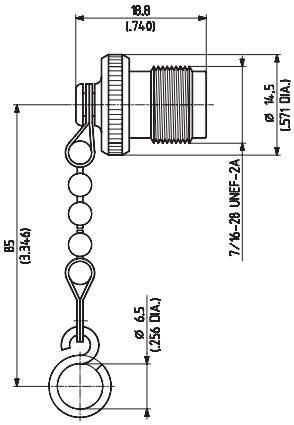



HUBER+SUHNER type	Item no.	Packaging	Notes
61_TNC-0-0-1/-33_-E	22640661	single	with chain

Protective cap for jacks

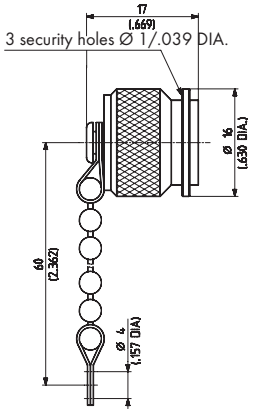



HUBER+SUHNER type	Item no.	Packaging	Notes
62_TNC-0-0-1/-33_-E	22640665	single	with chain

Cable groups see page 32 | Assembly tools see page 531 | Mounting holes/PCB layouts see page 561

L'IMPULSION
Retrouvez nous sur
www.limpulsion.fr

L'IMPULSION | Retrouvez nous sur www.limpulsion.fr

Series TNC 75 Ω – coaxial miniature connectors

Description

Within the internationally standardised TNC mating face dimensions a perfect 75 Ω characteristic impedance cannot be realised. However, at frequencies up to 1 GHz the small impedance deviation is negligible for practical applications. The threaded coupling mechanism allows them to be used under higher environmental load than BNC.

Content

Description	345
Compatibility	345
Interface dimensions in mm/inches	345
Technical data	346
Cable connectors	347
Protective caps	349

Compatibility

75 Ω TNC connectors and 50 Ω TNC connectors are intermateable without restrictions.

Interface dimensions (mm/inches)

Plug (male)

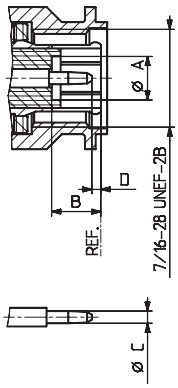

	Plug		Jack	
	min.	max.	min.	max.
A	4.83/0.190	4.97/0.196	-	4.72/0.186
B	5.28/0.208	5.79/0.228	4.72/0.186	5.23/0.206
C	1.32/0.052	1.37/0.054	1.50 /0.059 nom.	
D	0.08/0.003	1.02/0.040	2.10/0.827 nom.	
E	-	-	4.95/0.195	-
F	-	-	9.60/0.378	9.70/0.382
G	-	-	8.35/0.328	8.48/0.334
H	-	-	8.10/0.319	8.15/0.321
I	-	-	10.60/0.417	-

Jack (female)

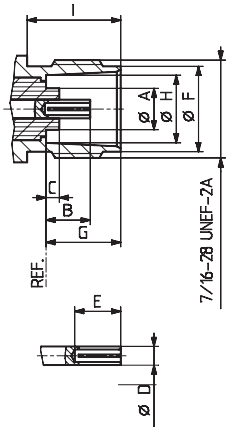

Interface dimensions conformable to the standards:

Based on IEC 60169-17 and IEC 60169-8, annex A

L'IMPULSION
Retrouvez nous sur
www.limpulsion.fr

Series TNC 75 Ω – technical data

Electrical data	Requirements
Impedance	75 Ω
Frequency range	DC to 1 GHz
Dielectric withstanding voltage (at sea level)	1.5 kV rms, 50 Hz (depending on cable)
Working voltage (at sea level) • Unmated	 500 V rms, 50 Hz (depending on cable)
Insulation resistance	≥ 5 • 10^3 MΩ
Contact resistance • Centre contact • Outer contact	 ≤ 1.5 mΩ ≤ 1 mΩ
RF leakage (measured at 1 GHz)	≥ 60 dB

Mechanical data	Requirements
Coupling nut torque • Recommended	 46 to 69 Ncm/4.1 to 6.1 in lbs
Coupling nut retention force	≥ 450 N/101.2 lbs
Contact captivation	≥ 27 N/6.1 lbs
Cable retention force [1]	see pages 32 – 41
Durability (matings)	≥ 500

Environmental data	Requirements
Temperature range	–65 to +165 °C/–85 to +329 °F
Climatic category	IEC → 55/155/21
Thermal shock	MIL-STD-202, method 107, condition B
Moisture resistance	MIL-STD-202, method 106
Corrosion	saltspray test acc. to MIL-STD-202, method 101, condition B
Vibration	MIL-STD-202, method 204, condition B
Shock	MIL-STD-202, method 213, condition G

Material data		
Connector parts	Material	Plating
Bodies	brass	SUCOPLATE®
Pin contacts	brass	gold/SUCOPRO® gold plating
Socket contacts	copper(-beryllium) alloy copper alloy	gold/SUCOPRO® gold plating
Crimp ferrules	copper/brass	SUCOPLATE®
Insulators, standard version	PTFE or PFA	
Gaskets	silicone rubber	

Performance values are typical for the connector interface. Individual component or connector performance may vary depending on the connector design, attachment (e.g. cable, PCB) or application. For detailed specifications please refer to the specific data sheets on our website www.hubersuhner.com.

[1] Value considers maximum load of the cables without irreversible variations of specifications.

L'IMPULSION | Retrouvez nous sur www.limpulsion.fr

Series TNC 75 Ω – cable connectors

Straight cable plugs (male)

For flexible cables

- Cable entry clamp
- Centre contact soldered



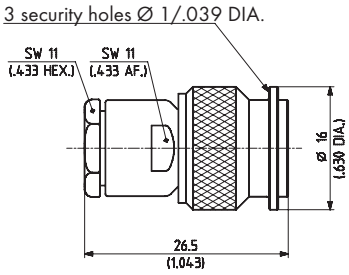

HUBER+SUHNER type	Item no.	Cable group (example)	Packaging	Assembly instruction
11_TNC-75-4-2/133_NE	22543477	U16 (RG_59_B/U, RADOX_RF_59)	single	3005

For flexible cables

- HUBER+SUHNER full crimp
- Taper sleeves see page 554



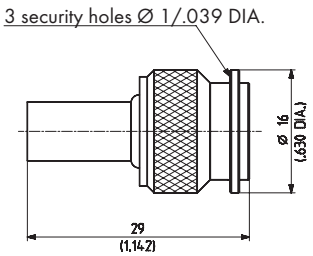

HUBER+SUHNER type	Item no.	Cable group (example)	Packaging	Assembly instruction	Crimp inserrt
11_TNC-75-4-4/133_NE	22543478	U16 (RG_59_B/U, RADOX_RF_59)	single	3015	2 C
11_TNC-75-4-30/133_NE	22642503	U17 (S_04233)			

Cable groups see page 32 | Assembly tools see page 531 | Mounting holes/PCB layouts see page 561

L'IMPULSION
Retrouvez nous sur
www.limpulsion.fr

Series TNC 75 Ω – cable connectors

Right angle cable plugs (male)

For flexible cables
- Cable entry clamp
- Centre contact soldered



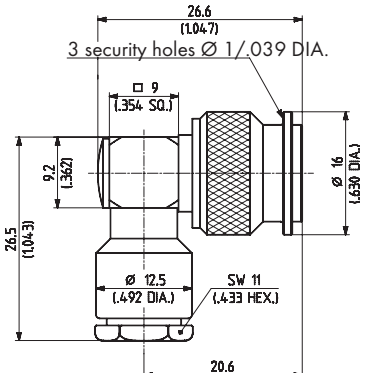

HUBER+SUHNER type	Item no.	Cable group (example)	Packaging	Assembly instruction
16_TNC-75-4-2/133_NE	22641402	U16 (RG_59_B/U, RADOX_RF_59)	single	3024

Straight bulkhead cable jacks (female)

For flexible cables
- HUBER+SUHNER full crimp
- With panel seal
- Taper sleeves see page 554
- Insulating washers see page 556

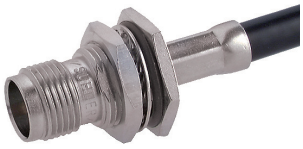

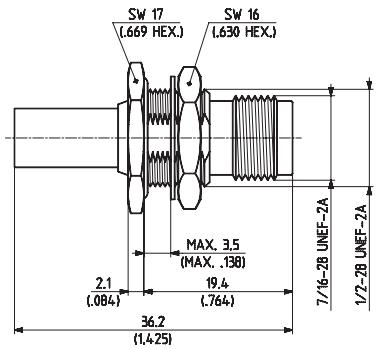

HUBER+SUHNER type	Item no.	Cable group (example)	Packaging	Assembly instruction	Mounting hole	Crimp insert
24_TNC-75-4-8/133_NE	22544140	U16 (RG_59_B/U, RADOX_RF_59)	single	3015	ML 4	2 C

Cable groups see page 32 | Assembly tools see page 531 | Mounting holes/PCB layouts see page 561

L'IMPULSION | Retrouvez nous sur www.limpulsion.fr

Series TNC 75 Ω – protective caps

Protective cap for plugs

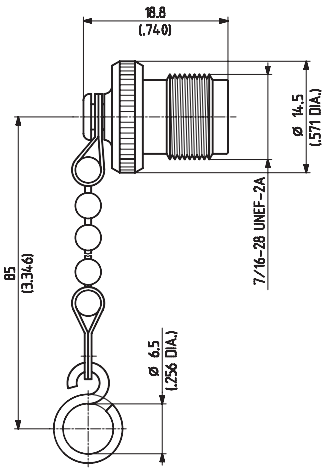



HUBER+SUHNER type	Item no.	Packaging	Notes
61_TNC-0-0-1/-33_-E	22640661	single	with chain

Protective cap for jacks

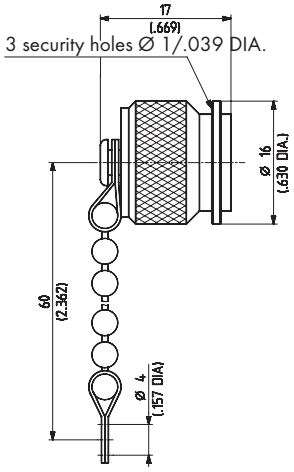



HUBER+SUHNER type	Item no.	Packaging	Notes
62_TNC-0-0-1/-33_-E	22640665	single	with chain

Cable groups see page 32 | Assembly tools see page 531 | Mounting holes/PCB layouts see page 561

L'IMPULSION
Retrouvez nous sur
www.limpulsion.fr

L'IMPULSION | Retrouvez nous sur www.limpulsion.fr

Series SHV – high voltage connectors

Description

HUBER+SUHNER SHV (Safe High Voltage) connectors provide more secure handling: centre contacts are well recessed to prevent shock hazards in unmated condition. When mating a connector pair the outer conductor contact is made prior to the inner conductor contacts.

SHV connectors are suitable for all high voltage applications up to 5 kV DC or 3.5 kV rms. These connectors are typically used in nuclear instruments or test and measurement equipment. Voltages are valid for both, the mated and the unmated condition.

Content

Description	351
Interface dimensions in mm/inches	351
Technical data	352
Cable connectors	353
Receptacles with solder end	355

Interface dimensions (mm/inches)

Plug (male)

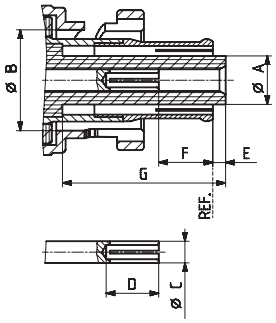

	Plug		Jack	
	min.	max.	min.	max.
A	4.57/0.180	4.72/0.186	4.83/0.190	4.98/0.196
B	9.78/0.385	9.91/0.390	9.60/0.378	9.70/0.382
C	2.06/0.081	-	2.06/0.081	-
D	5.44/0.214	-	5.26/0.207	5.44/0.214
E	1.17/0.046	1.63/0.064	1.55/0.061	1.98/0.078
F	4.42/0.174	-	3.30/0.130	-
G	15.90/0.626	16.10/0.634	15.90/0.626	16.00/0.630
H	-	-	11.59/0.456	12.70/0.500
I	-	-	1.32/0.052	1.37/0.054
K	-	-	10.85/0.427	-
L	-	-	1.63/0.064	2.18/0.086

Jack (female)

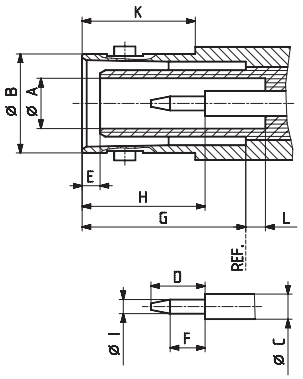

Interface dimensions conformable to the standards:

International:	IEC 60498, NIM ND-545
USA:	MIL-STD-348/314
	ANSI N 24.4

L'IMPULSION
Retrouvez nous sur
www.limpulsion.fr

Series SHV – technical data

Electrical data	Requirements
Impedance	50 Ω
Frequency range	DC to 300 MHz
Dielectric withstanding voltage (at sea level)	5.0 kV rms, 50 Hz (depending on cable)
Working voltage (at sea level)	3.5 kV rms, 50 Hz (depending on cable)
Insulation resistance	≥ 1 TΩ
Contact resistance • Centre contact • Outer contact	 ≤ 2 mΩ ≤ 1.5 mΩ
Corona extinction voltage (at 21 000 m)	≥ 350 V rms, 50 Hz (depending on cable)
Current rating, continuous	≤ 10 A

Mechanical data	Requirements
Coupling nut torque	7 to 28 Ncm/0.6 to 2.5 in lbs
Coupling nut retention force	≥ 450 N/101.2 lbs
Contact captivation	≥ 27 N/6.1 lbs
Cable retention force [1]	see pages 32 – 41
Durability (matings)	≥ 500

Environmental data	Test conditions (PTFE)	Test conditions (polystyrol)
Temperature range	–65 to +165 °C/–85 to +329 °F	–55 to +100 °C/–67 to +212 °F
Climatic category	IEC → 55/155/21	
Thermal shock	MIL-STD-202, method 107, condition B	
Moisture resistance	MIL-STD-202, method 103, condition B	
Corrosion	saltspray test acc. to MIL-STD-202, method 101, condition B	
Vibration	MIL-STD-202, method 204, condition A	
Shock	MIL-STD-202, method 213, condition I	
Radiation resistance (with polystyrene dielectric)	≥ 10^9 rad	

Material data		
Connector parts	**Material**	**Plating**
Bodies	brass	SUCOPLATE®
Pin contacts	brass	gold
Socket contacts	copper-beryllium alloy	gold
Crimp ferrules	copper	SUCOPLATE®
Insulators	PTFE or PFA	
Insulators (radiation resistant types)	polystyrol, crosslinked	

Performance values are typical for the connector interface. Individual component or connector performance may vary depending on the connector design, attachment (e.g. cable, PCB) or application. For detailed specifications please refer to the specific data sheets on our website www.hubersuhner.com.

[1] Value considers maximum load of the cables without irreversible variations of specifications.

Series SHV – cable connectors

Straight cable plugs (male)

- HUBER+SUHNER full crimp
- Taper sleeves see page 554



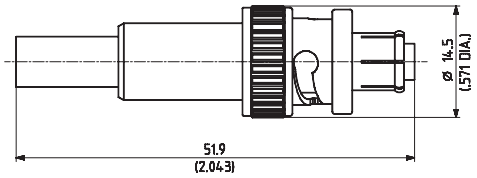

HUBER+SUHNER type	Item no.	Cable group (example)	Packaging	Assembly instruction	Crimp insert
11_SHV-50-3-1/133_NE	22541987	U7 (RG_58_C/U, ENVIROFLEX_B58)	single	3092	2 B
11_SHV-50-4-1/133_NE	22541992	U16 (RG_59_B/U, RADOX_RF_59)			2 C

- Cable entry clamp
- Centre contact soldered



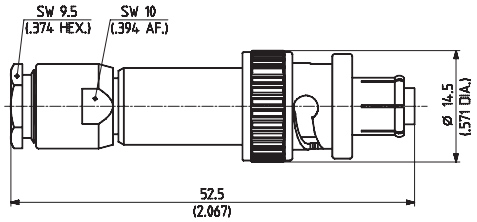

HUBER+SUHNER type	Item no.	Cable group (example)	Packaging	Assembly instruction
11_SHV-50-3-10/133_NE	22541990	U7 (RG_58_C/U, ENVIROFLEX_B58)	single	3094
11_SHV-50-4-10/133_NE	22541996	U16 (RG_59_B/U, RADOX_RF_59)		

Straight cable jacks (female)

- HUBER+SUHNER full crimp
- Taper sleeves see page 554



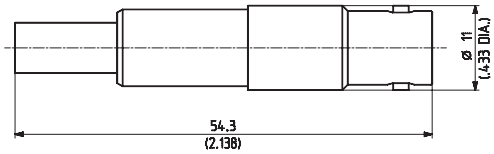

HUBER+SUHNER type	Item no.	Cable group (example)	Packaging	Assembly instruction	Crimp insert
21_SHV-50-3-1/133_NE	22541998	U7 (RG_58_C/U, ENVIROFLEX_B58)	single	3092	2 B
21_SHV-50-4-1/133_NE	22542001	U16 (RG_59_B/U, RADOX_RF_59)			2 C

Cable groups see page 32 | Assembly tools see page 531 | Mounting holes/PCB layouts see page 561

L'IMPULSION
Retrouvez nous sur
www.limpulsion.fr

Series SHV – cable connectors

Straight bulkhead cable jacks (female)

- HUBER+SUHNER full crimp
- With panel seal
- Taper sleeves see page 554



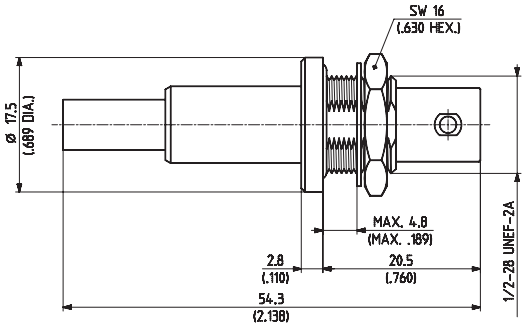

HUBER+SUHNER type	Item no.	Cable group (example)	Packaging	Assembly instruction	Mounting hole	Crimp insert
24_SHV-50-3-1/133_NE	22641281	U7 (RG_58_C/U, ENVIROFLEX_B58)	single	3092	ML 4	2 B
24_SHV-50-4-1/133_NE	22544592	U16 (RG_59_B/U, RADOX_RF_59)				2 C

Cable groups see page 32 | Assembly tools see page 531 | Mounting holes/PCB layouts see page 561

Series SHV – receptacles with solder end

Receptacles, jacks (female)

- Bulkhead mounted
- Without panel seal



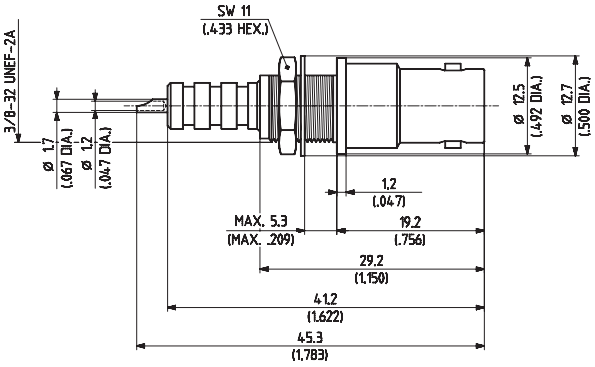

HUBER+SUHNER type	Item no.	Packaging	Mounting hole	Insulator	Notes
22_SHV-50-0-2/133_NE	22544054	single	ML 2	PTFE	
22_SHV-50-0-6/133_NE	22542007			polystyrol	radiation resistant

- Bulkhead mounted
- Hermetically sealed



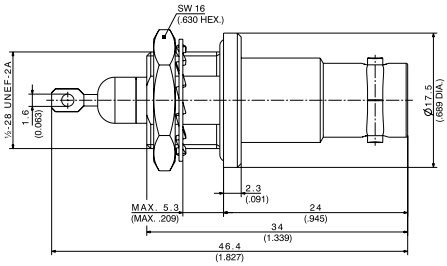

HUBER+SUHNER type	Item no.	Packaging	Mounting hole	Plating body	Notes
22_SHV-50-0-3/100_NE [1]	22543968	single	ML 4	silver	leak rate 10^{-6} Torr l/s (atm cc/s)

[1] RoHS compliant alternative on request

Cable groups see page 32 | Assembly tools see page 531 | Mounting holes/PCB layouts see page 561

Series SHV – receptacles with solder end

Receptacles, jacks (female)

- Panel mounted



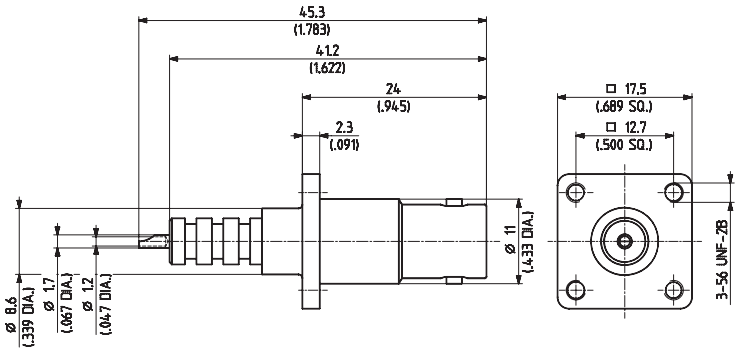

HUBER+SUHNER type	Item no.	Packaging	Mounting hole	Notes
23_SHV-50-0-1/133_NE	22542008	single	ML 106	mounting also possible with screws ISO M 2.5

- Panel mounted



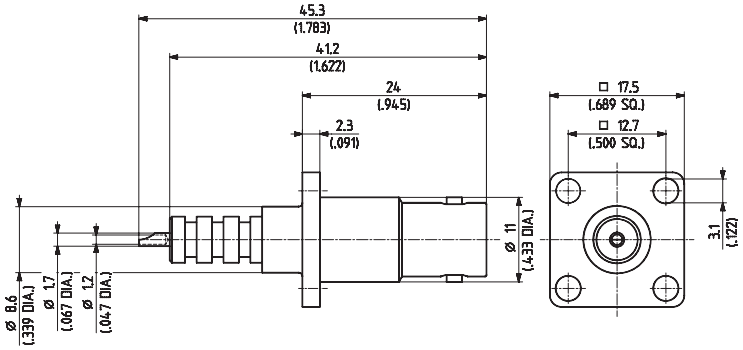

HUBER+SUHNER type	Item no.	Packaging	Mounting hole
23_SHV-50-0-2/133_NE	22542010	single	ML 106

Cable groups see page 32 | Assembly tools see page 531 | Mounting holes/PCB layouts see page 561

L'IMPULSION | Retrouvez nous sur www.limpulsion.fr

Series MHV (H4) – high voltage connectors

Description

HUBER+SUHNER MHV (Miniature High Voltage) are coaxial miniature high voltage connectors with 5 kV rms test voltage (mated pairs). The MHV connectors have a working voltage up to 1.6 kV rms in mated condition and are suitable for applications up to 300 MHz. MHV connectors are of similar design to BNC connectors but the insulators protrude over the outer contacts to give a degree of contact-voltage proof when unmated.

However, if a high degree of protection in the unmated condition is required, use of series SHV is recommended.

Content

Description	357
Interface dimensions in mm/inches	357
Technical data	358
Cable connectors	359
Receptacles with solder end	361

Interface dimensions (mm/inches)

Plug (male)

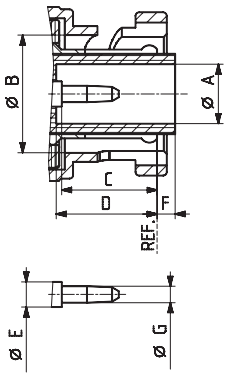

	Plug		Jack	
	min.	max.	min.	max.
A	4.83/0.190	-	-	4.72/0.186
B	9.78/0.385	9.91/0.390	9.60/0.378	9.70/0.382
C	7.18/0.283	-	-	7.11/0.280
D	8.10/0.319	-	-	8.05/0.317
E	-	2.31/0.091	2.06/0.081	2.31/0.091
F	-	2.18/0.086	2.18/0.086	-
G	1.32/0.052	1.37/0.054	8.31/0.327	8.51/0.335
H	-	-	10.52/0.414	-
I	-	-	6.86/0.270	-

Jack (female)

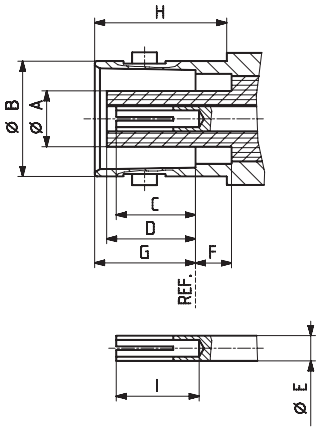

L'IMPULSION
Retrouvez nous sur
www.limpulsion.fr

Series MHV – technical data

Electrical data	Requirements
Impedance	50 Ω
Frequency range	DC to 300 MHz
Dielectric withstanding voltage (at sea level)	5.0 kV rms, 50 Hz (depending on cable)
Working voltage (at sea level)	1.6 kV rms, 50 Hz (depending on cable)
Insulation resistance	≥ 5 GΩ
Contact resistance • Centre contact • Outer contact	 ≤ 2 mΩ ≤ 1 mΩ
Corona extinction voltage (at 21 000 m)	≥ 300 V rms, 50 Hz (depending on cable)
Current rating, continuous	≤ 10 A

Mechanical data	Requirements
Coupling nut torque	7 to 28 Ncm/0.6 to 2.5 in lbs
Coupling nut retention force	≥ 450 N /101.2 lbs
Contact captivation	≥ 15 N /6.1 lbs
Cable retention force [1]	see pages 32 – 41
Durability (matings)	≥ 500

Environmental data	Test conditions
Temperature range	–65 to +165 °C/–85 to +329 °F
Climatic category	IEC → 55/155/21
Thermal shock	MIL-STD-202, method 107, condition B
Moisture resistance	MIL-STD-202, method 106
Corrosion	saltspray test acc. to MIL-STD-202, method 101, condition B
Vibration	MIL-STD-202, method 204, condition B

Material data		
Connector parts	Material	Plating
Bodies	brass	SUCOPLATE®
Pin contacts	brass	gold
Socket contacts	copper-beryllium alloy	gold
Crimp ferrules	copper	SUCOPLATE®
Insulators	PTFE or PFA	

Performance values are typical for the connector interface. Individual component or connector performance may vary depending on the connector design, attachment (e.g. cable, PCB) or application. For detailed specifications please refer to the specific data sheets on our website www.hubersuhner.com.

[1] Value considers maximum load of the cables without irreversible variations of specifications.

L'IMPULSION | Retrouvez nous sur www.limpulsion.fr

Series MHV – cable connectors

Straight cable plugs (male)

- Cable entry clamp
- Center contact soldered



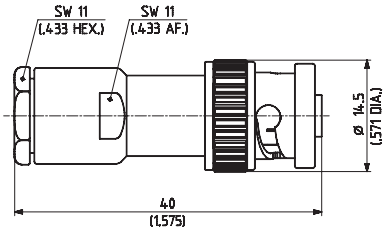

HUBER+SUHNER type	Item no.	Cable group (example)	Packaging	Assembly instruction
11_H4-50-3-1/133_NE [1]	22541732	U7 (RG_58_C/U, ENVIROFLEX_B58)	single	3012
11_H4-50-4-1/133_NE [1]	22541742	U16 (RG_59_B/U, RADOX_RF_59)		

- Cable entry crimp
- Taper sleeves see page 554



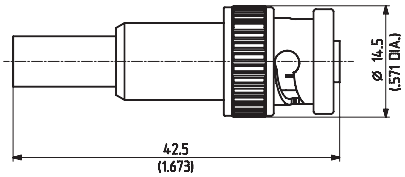

Fig. 1

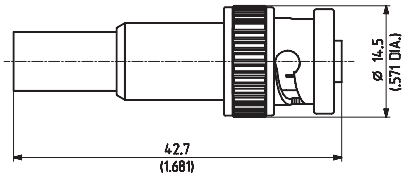

Fig. 2

HUBER+SUHNER type	Item no.	Cable group (example)	Packaging	Assembly instruction	Crimp insert	Fig.
11_H4-50-3-3/133_NE [1]	22541737	U7 (RG_58_C/U, ENVIROFLEX_B58)	single	3078	B	1
11_H4-50-4-4/133_NE [1]	22543809	U16 (RG_59_B/U, RADOX_RF_59)			C	2

Straight cable jacks (female)

- Cable entry clamp
- Center contact soldered



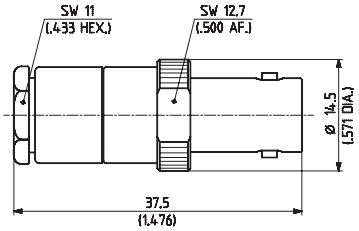

HUBER+SUHNER type	Item no.	Cable group (example)	Packaging	Assembly instruction
21_H4-50-3-1/133_NE [1]	22541756	U7 (RG_58_C/U, ENVIROFLEX_B58)	single	3012

[1] Centre contact NOT captivated

Cable groups see page 32 | Assembly tools see page 531 | Mounting holes/PCB layouts see page 561

Series MHV – cable connectors

Straight bulkhead cable jacks (female)

- Cable entry clamp
- Center contact soldered
- With panel seal



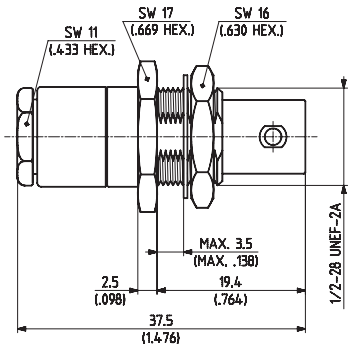

HUBER+SUHNER type	Item no.	Cable group (example)	Packaging	Assembly instruction	Mounting hole
24_H4-50-3-1/133_NE [1]	22541784	U7 (RG_58_C/U, ENVIROFLEX_B58)	single	3012	ML 4

Receptacles with solder end

Receptacles, jacks (female)

- Bulkhead mounted
- With panel seal



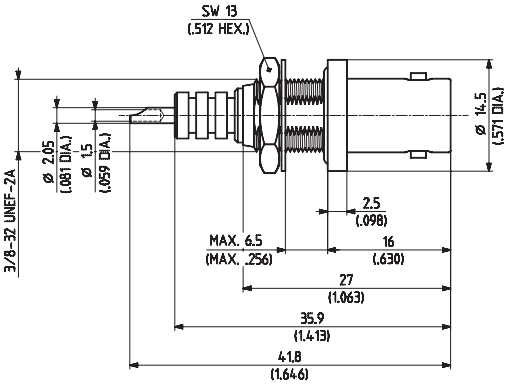

HUBER+SUHNER type	Item no.	Packaging	Mounting hole
22_H4-50-0-1/133_NE	22652095	single	ML 1

[1] Centre contact NOT captivated

Cable groups see page 32 | Assembly tools see page 531 | Mounting holes/PCB layouts see page 561

Series MHV – receptacles with solder end

Receptacles, plugs (male)

- Bulkhead mounted



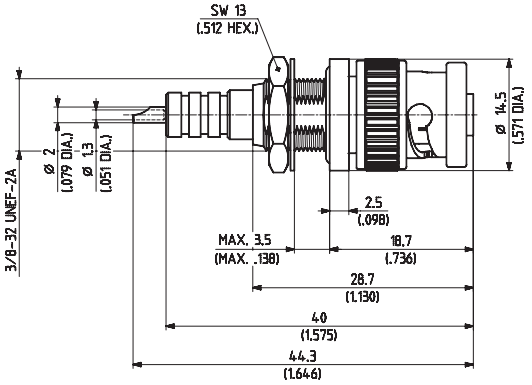

HUBER+SUHNER type	Item no.	Packaging	Mounting hole	Notes
12_H4-50-0-1/133_NE	22543467	single	ML 2	with panel seal

Flange mount, jacks (female)

- Panel mounted



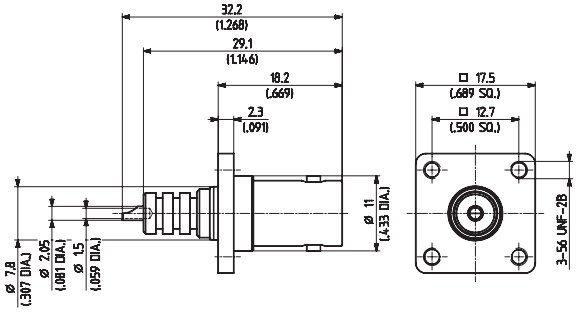

Fig. 1

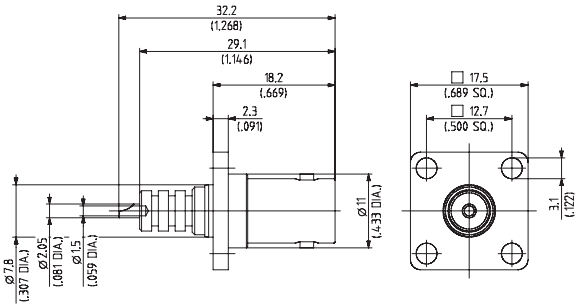

Fig. 2

HUBER+SUHNER type	Item no.	Packaging	Mounting hole	Notes	Fig.
23_H4-50-0-7/133_NE	22541776	single	ML 6	mounting also possible with screws ISO M 2.5	1
23_H4-50-0-8/133_NE	22541779				2

Cable groups see page 32 | Assembly tools see page 531 | Mounting holes/PCB layouts see page 561

L'IMPULSION
Retrouvez nous sur
www.limpulsion.fr

L'IMPULSION | Retrouvez nous sur www.limpulsion.fr

Series N 50 Ω – coaxial connectors

Description

HUBER+SUHNER N connectors are available with 50 Ω and 75 Ω impedance. The frequency range extends to 18 GHz, depending on the connector and cable type. The screw-type coupling mechanism provides a sturdy and reliable connection.

HUBER+SUHNER N connectors are available for flexible cables, for semi-rigid cables and for corrugated copper tube cables.

Cable entries: clamp, crimp and solder types available, as well as HUBER+SUHNER Quick-Fit for corrugated copper tube cables.

Compatibility

Inner conductors of N 75 Ω connectors have a smaller diameter than those of the 50 Ω version. Therefore 50 Ω and 75 Ω connectors must not be mated with each other.

Content

Description	363
Compatibility	363
Interface dimensions in mm/inches	363
Technical data	364
Cable connectors	367
Receptacles with solder end	386
Stripline launchers	390
Protective caps	391

Interface dimensions (mm/inches)

Plug (male)

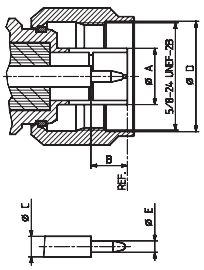

Jack (female)

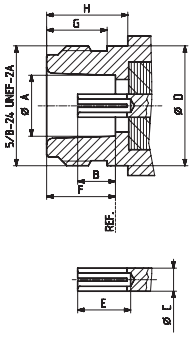

	Plug		Jack	
	min.	max.	min.	max.
A	-	8.38/0.330	8.03/0.316	8.13/0.320
B	5.33/0.210	5.84/0.230	4.75/0.187	5.26/0.207
C	-	3.15/0.124	-	3.15/0.124
D	16.00/0.630	-	-	15.93/0.627
E	1.60/0.063	1.68/0.066	5.33/0.210	-
F	-	-	9.04/0.356	9.19/0.362
G	-	-	6.76/0.266	-
H	-	-	10.72/0.422	-

Interface dimensions conformable to the standards:

International:	IEC 61169-16
Europe:	CECC 22 210
USA:	MIL-STD-348/304

IP rating (interface, mated) IP68

L'IMPULSION Retrouvez nous sur www.limpulsion.fr

Series N 50 Ω – technical data

Electrical data	Requirements
Impedance	50 Ω
Frequency range • Flexible cables • Semi-rigid cables	 DC to 11 GHz DC to 18 GHz
Dielectric withstanding voltage (at sea level)	2.5 kV rms, 50 Hz
Working voltage (at sea level)	≤ 1.0 kV rms, 50 Hz
Insulation resistance	≥ 5 • 10^3 MΩ
Contact resistance • Centre contact • Outer contact	 ≤ 1.0 mΩ ≤ 1.0 mΩ
RF leakage (between 2 and 3 GHz)	≥ 90 dB
VSWR	see table below

Typical VSWR [1]	Frequency range					Cable group
Connector type	1 GHz	2.5 GHz	5 GHz	12.4 GHz	18 GHz	
Straight connectors	1.04	1.05	1.08			M6
	1.03	1.04	1.06	1.12		Y5, Y12
	1.03	1.04	1.05	1.07	1.09	Y5, Y12
	1.03	1.04	1.05	1.08	1.12	Y7
	1.05	1.09	1.17			U7, U9
	1.04	1.06	1.12			U28, U29, U32, U33
	1.03	1.05	1.14			S24
	1.03	1.05	1.10			S39
Right angle connectors	1.04	1.05	1.08			M6
	1.04	1.05	1.06	1.12		Y5, Y12
	1.05	1.10	1.20			U7, U9
	1.08	1.10	1.12			U28, U29, U32, U33

Performance values are typical for the connector interface. Individual component or connector performance may vary depending on the connector design, attachment (e.g. cable, PCB) or application. For detailed specifications please refer to the specific data sheets on our website www.hubersuhner.com.

[1] Values which can be achieved when connectors are perfectly fixed onto cable.

L'IMPULSION
Retrouvez nous sur
www.limpulsion.fr

Series N 50 Ω – technical data

Admissible power of N connectors

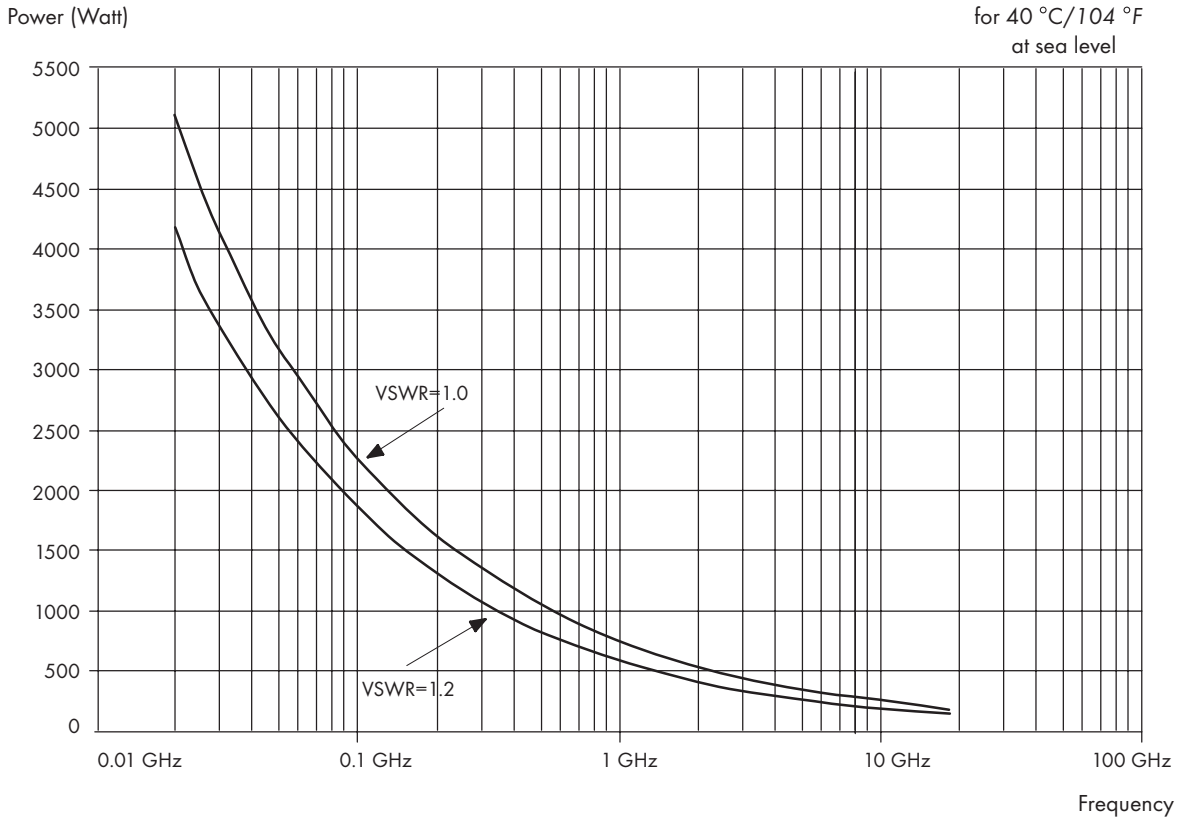

Mechanical data	Requirements
Coupling nut torque • Recommended	0.68 to 1.13 Nm/6.0 to 10.0 in lbs
Coupling nut retention force	≥ 450 N/101.2 lbs
Contact captivation	≥ 28 N/6.3 lbs
Cable retention force [1]	see pages 32 – 41
Durability (matings)	≥ 500

Performance values are typical for the connector interface. Individual component or connector performance may vary depending on the connector design, attachment (e.g. cable, PCB) or application. For detailed specifications please refer to the specific data sheets on our website www.hubersuhner.com.

[1] Value considers maximum load of the cables without irreversible variations of specifications.

L'IMPULSION
Retrouvez nous sur
www.limpulsion.fr

Series N 50 Ω – technical data

Environmental data	Requirements
Temperature range	–65 to +165 °C/–85 to +329 °F
Climatic category	IEC → 55/155/21
Thermal shock	MIL-STD-202, method 107, condition B
Moisture resistance	MIL-STD-202, method 106
Corrosion	saltspray test acc. to MIL-STD-202, method 101, condition B
Vibration	MIL-STD-202, method 204, condition B
Shock	MIL-STD-202, method 213, condition G

Material data		
Connector parts	Material	Plating
Bodies	brass	SUCOPLATE®
Pin contacts	brass	gold/SUCOPRO® gold plating
Outer contact, slotted	spring bronze	SUCOPLATE®
Female contacts	copper beryllium alloy, spring bronze	gold/SUCOPRO® gold plating
Crimp ferrules	copper	SUCOPLATE®
Insulators, standard version	PTFE or PFA	
Gaskets	silicone rubber	

Performance values are typical for the connector interface. Individual component or connector performance may vary depending on the connector design, attachment (e.g. cable, PCB) or application. For detailed specifications please refer to the specific data sheets on our website www.hubersuhner.com.

L'IMPULSION | Retrouvez nous sur www.limpulsion.fr

Series N 50 Ω – cable connectors

Straight cable plugs (male)

For semi-rigid cables

- Cable entry soldered
- Centre contact soldered



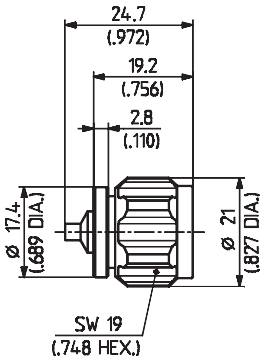

Fig. 1

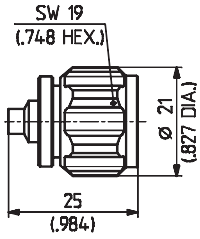

Fig. 2

HUBER+SUHNER type	Item no.	Cable group	Packaging	Assembly instruction	Weight	Fig.
11_N-50-2-15/113_UE	22660315	Y3, Y11, Y16 (EZ_86)	single	3095	25.6 g/0.90 oz.	1
11_N-50-3-13/113_NE	22542083	Y5, Y12, Y17 (EZ_141)			29.0 g/1.02 oz.	2

For Sucoform cables

- Cable entry soldered
- Centre contact soldered



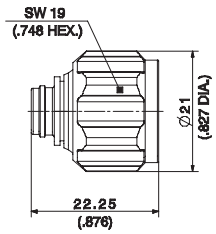

HUBER+SUHNER type	Item no.	Cable group	Packaging	Assembly instruction	Weight	Fig.
11_N-50-5-18/103_NH	84008445	Y7, Y13, Y14 (SUCOFORM_250-01)	bulk 100 pcs.	0000215552	21.9 g/0.77 oz.	1

Cable groups see page 32 | Assembly tools see page 531 | Mounting holes/PCB layouts see page 561

L'IMPULSION
Retrouvez nous sur
www.limpulsion.fr

Series N 50 Ω – cable connectors

Straight cable plugs (male)

For semi-rigid cables

- Cable entry soldered
- Centre contact plugged-in
- Frequency range: DC to 18 GHz



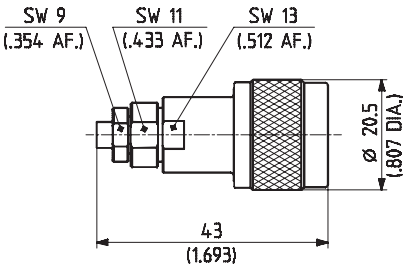

HUBER+SUHNER type	Item no.	Cable group	Packaging	Assembly instruction	Weight
11_N-50-3-51/133_NE	22543919	Y5, 12 (EZ_141)	single	9006	43.0 g/1.51 oz. [1]

For flexible cables

- Cable entry clamp
- Centre contact soldered



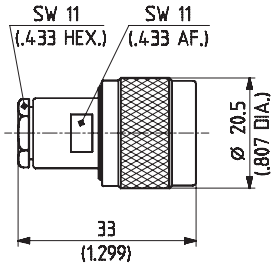

HUBER+SUHNER type	Item no.	Cable group	Packaging	Assembly instruction	Weight
11_N-50-2-1/133_NE	22544030	U2 (RG_316_/U, ENVIROFLEX_316)	single	3017	38.0 g/1.33 oz.
11_N-50-2-2/133_NE	22643807	U4 (K_02252_D, ENVIROFLEX_316_D)			38.0 g/1.33 oz.
11_N-50-3-5/133_NE	22542073	U7, U9, U11, X25 (RG_58_C/U, ENVIROFLEX_B58)			36.0 g/1.26 oz.

[1] Stainless steel

Cable groups see page 32 | Assembly tools see page 531 | Mounting holes/PCB layouts see page 561

L'IMPULSION | Retrouvez nous sur www.limpulsion.fr

Series N 50 Ω – cable connectors

Straight cable plugs (male)

Precision connector – low VSWR

For flexible cables
- Cable entry clamp
- Centre contact soldered
- VSWR: DC to 4 GHz ≤ 1.10; 4 to 10 GHz ≤ 1.20; 10 to 12.4 GHz ≤ 1.25



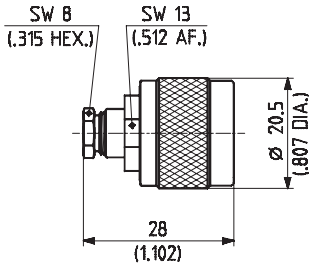

HUBER+SUHNER type	Item no.	Cable group	Packaging	Assembly instruction	Weight
11_N-50-3-54/133_NE	22642009	U9, U11, X25 (RG_223_/U, ENVIROFLEX_B223)	single	9099	32.0 g/1.12 oz.

For flexible cables
- Cable entry clamp
- Centre contact soldered



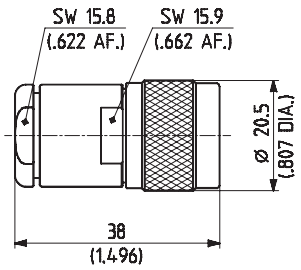

HUBER+SUHNER type	Item no.	Cable group	Packaging	Assembly instruction	Weight
11_N-50-7-5/133_NE [1]	22542117	U29, U32, X11 (RG_214_/U, ENVIROFLEX_B214)	single	3007	51.0 g/1.79 oz.
11_N-50-7-6/133_NE	22542120			3008	51.0 g/1.79 oz.
11_N-50-7-82/133_NE [2]	84081597	U30 (SPUMA_400, SPUMA_400-FR-01)		253737	55.0 g/1.94 oz.

[1] Centre contact NOT captivated
[2] Centre contact plugged

Cable groups see page 32 | Assembly tools see page 531 | Mounting holes/PCB layouts see page 561

L'IMPULSION
Retrouvez nous sur
www.limpulsion.fr

Series N 50 Ω – cable connectors

Straight cable plugs (male)

For flexible cables

- HUBER+SUHNER full crimp
- Taper sleeves see page 554

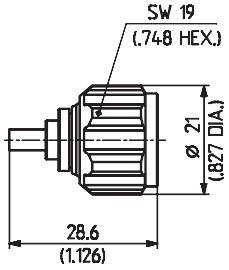



HUBER+SUHNER type	Item no.	Cable group	Packaging	Assembly instruction	Crimp insert	Weight
11_N-50-2-11/133_NH	22658813	U2 (RG_316_/U, ENVIROFLEX_316_D)	bulk 100 pcs.	9068	1 A	26.5 g/0.93 oz.
11_N-50-2-16/133_NE	23014128	U4 (K_02252_D, ENVIROFLEX_316_D)	single			25.4 g/0.89 oz.

For flexible cables

- HUBER+SUHNER full crimp
- Taper sleeves see page 554

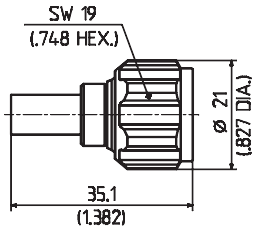



HUBER+SUHNER type	Item no.	Cable group	Packaging	Assembly instruction	Crimp insert	Weight
11_N-50-3-28/133_NE	22642842	U7 (RG_58_C/U, ENVIROFLEX_B58)	single	3015	2 B	23.0 g/0.81 oz.
11_N-50-3-29/133_NE	22642843	U9, U39 (RG_223_/U, ENVIROFLEX_B223)	single	3015	2 B	23.0 g/0.81 oz.
11_N-50-3-31/133_NE 11_N-50-3-31/133_NH	22648829 22650658	U11, U41 (RG_400_/U, ENVIROFLEX_400)	single bulk 100 pcs.	3015	2 B	28.0 g/0.98 oz.
11_N-50-4-63/133_NE	22652069	S16 (SX_04172_B-60)	single	3015	2 C	27.3 g/0.96 oz.

Cable groups see page 32 | Assembly tools see page 531 | Mounting holes/PCB layouts see page 561

L'IMPULSION | Retrouvez nous sur www.limpulsion.fr

Series N 50 Ω – cable connectors

Straight cable plugs (male)

For flexible cables

- Cable entry crimp
- Centre contact plugged-in
- Taper sleeves see page 554



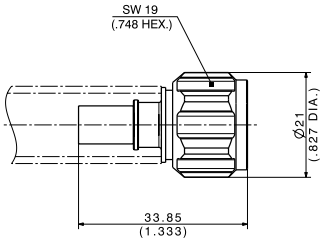

Fig. 1

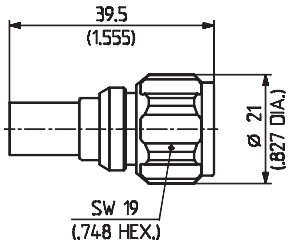

Fig. 2

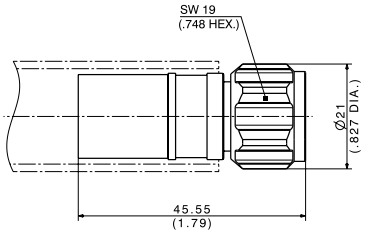

Fig. 3

HUBER+SUHNER type	Item no.	Cable group	Packaging	Assembly instruction	Crimp insert	Weight	Fig.
11_N-50-4-11/133_NH	84110 888	X28 (SPUMA_240, SPUMA_240-FR-01)	bulk 100 pcs.	291824	6.50	24.3 g/0.86 oz.	1
11_N-50-6-10/133_NH	22660330	S24 (S_06162_D-03)	bulk 100 pcs.	270891	8.65	29.5 g/1.03 oz.	2
11_N-50-12-20/033_-E	85009711	X29 (SPUMA_600)	single	420913	14.5	39.0 g/1.37 oz.	3

For flexible cables

- HUBER+SUHNER full crimp
- Taper sleeves see page 554



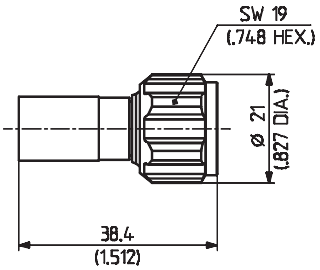

Fig. 1

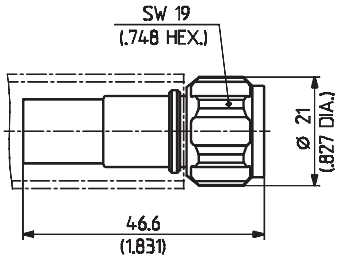

Fig. 2

HUBER+SUHNER type	Item no.	Cable group	Packaging	Assembly instruction	Crimp insert	Weight	Fig.
11_N-50-7-43/133_NE	22642844	U29, U42 (RG_213_/U, RADOX_RF_213)	single	3061	3 D	28.0 g/0.98 oz.	1
11_N-50-7-44/133_NE	22642845	U32, U43 (RG_214_/U, ENVIROFLEX_B214)		3061	3 D	28.0 g/0.98 oz.	1
11_N-50-7-49/133_NE	22652111	S32 (S_07262_BD)		9067	4 D	40.0 g/1.40 oz.	2
11_N-50-7-61/133_NE	22651793	U33 (RG_393_/U, ENVIROFLEX_393)		27070	2.5 D	28.5 g/1.00 oz.	1
11_N-50-7-69/133_NE	22660143	U30, X32 (SPUMA_400-FR-01, SPUMA_400-RS-FR)		311731	4 D	35.0 g/1.23 oz.	2

Cable groups see page 32 | Assembly tools see page 531 | Mounting holes/PCB layouts see page 561

L'IMPULSION
Retrouvez nous sur
www.limpulsion.fr

Series N 50 Ω – cable connectors

Straight cable plugs (male)

For flexible cables
- Cable entry crimp
- Centre contact plugged-in
- Degree of protection IP67



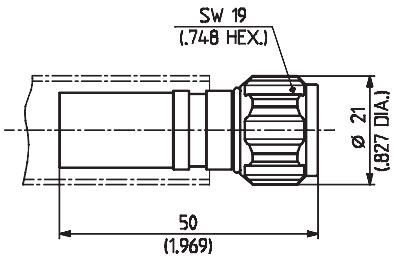

HUBER+SUHNER type	Item no.	Cable group	Packaging	Assembly instruction	Crimp insert	Weight
11_N-50-10-5/103_UV	23002543	S39 (S_10162_B-11)	bulk 20 pcs.	27356	12.4	37.8 g/1.32 oz.

Right angle cable plugs (male)

For semi-rigid cables
- Cable entry soldered
- Centre contact soldered



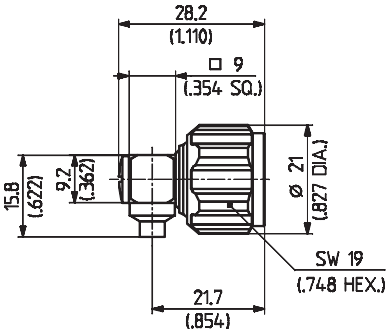

HUBER+SUHNER type	Item no.	Cable group	Packaging	Assembly instruction	Weight
16_N-50-3-15/133_NE	22648832	Y5, Y12, Y17 (EZ_141)	single	9200	29.1 g/1.02 oz.

Cable groups see page 32 | Assembly tools see page 531 | Mounting holes/PCB layouts see page 561

L'IMPULSION | Retrouvez nous sur www.limpulsion.fr

Series N 50 Ω – cable connectors

Right angle cable plugs (male)

For flexible cables
- Cable entry clamp
- Centre contact soldered



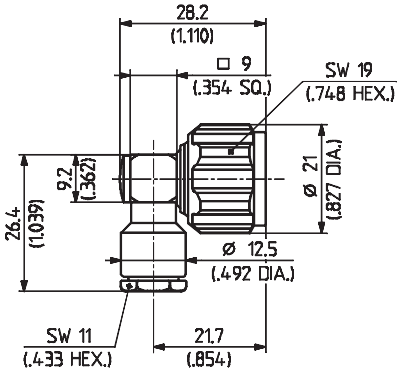

Fig. 1

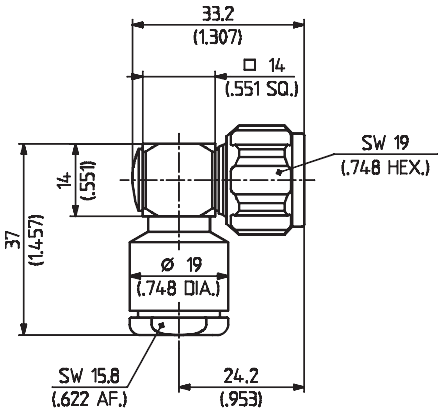

Fig. 2

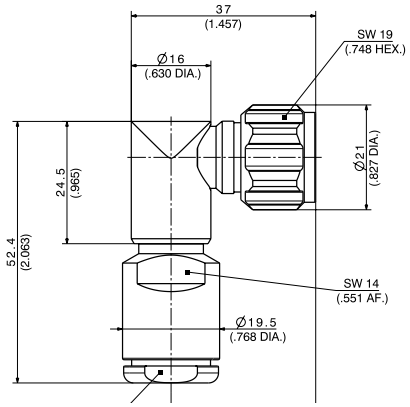

Fig. 3

HUBER+SUHNER type	Item no.	Cable group	Packaging	Assembly instruction	Weight	Fig.
16_N-50-3-103/133_NE	22651610	U7, U9, U11 (RG_223_/U, ENVIROFLEX_B223)	single	27060	37.0 g/1.30 oz.	1
16_N-50-7-26/133_NE	22650825	U29, U32 (RG_214_/U, ENVIROFLEX_B214)		27121	65.0 g/2.28 oz.	2
16_N-50-7-50/133_NE [1]	84082125	U30 (SPUMA_400, SPUMA_400-FR-01)		253737	87.0 g/3.07 oz.	3

[1] Centre contact plugged

Cable groups see page 32 | Assembly tools see page 531 | Mounting holes/PCB layouts see page 561

L'IMPULSION Retrouvez nous sur www.limpulsion.fr

Series N 50 Ω – cable connectors

Right angle cable plugs (male)

For flexible cables

- Cable entry crimp
- Centre contact soldered
- Taper sleeves see page 554



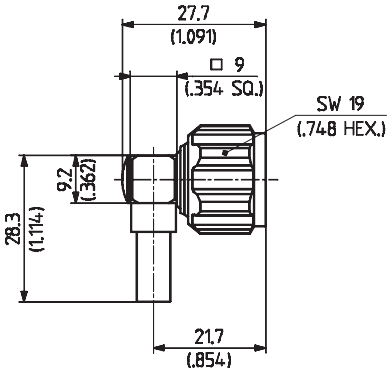

Fig. 1

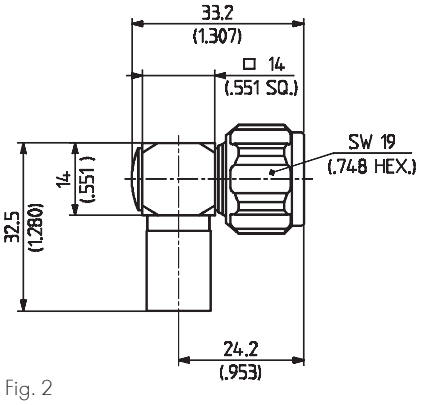

Fig. 2

HUBER+SUHNER type	Item no.	Cable group	Packaging	Assembly instruction	Crimp insert	Weight	Fig.
16_N-50-3-26/133_NE	22642846	U7 (RG_58_C/U, ENVIROFLEX_B58)	single	3058	B	27.0 g/0.95 oz.	1
16_N-50-3-27/133_NE 16_N-50-3-27/133_NH	22642847 22650168	U9, U11, U39 (RG_223_/U, ENVIROFLEX_B223)	single bulk 100 pcs.	3058	B	27.0 g/0.95 oz.	
16_N-50-7-30/133_NE	22642848	U29 (RG_213_/U, RADOX_RF_213)	single	3076	D	42.0 g/1.47 oz.	2
16_N-50-7-31/133_NE	22642849	U32 (RG_214_/U, ENVIROFLEX_B214)		3076	D	42.0 g/1.47 oz.	

For flexible cables

- Cable entry crimp
- Centre contact soldered
- Taper sleeves see page 554



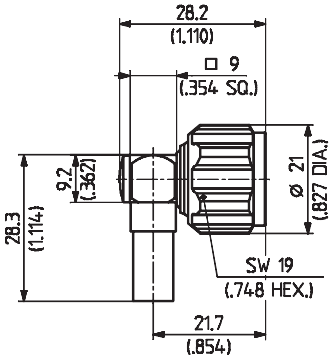

HUBER+SUHNER type	Item no.	Cable group	Packaging	Assembly instruction	Crimp insert	Weight
16_N-50-4-14/133_NE	23015067	S16 (S_04262_D-09)	single	3058	C	31.7 g/1.11 oz.

Cable groups see page 32 | Assembly tools see page 531 | Mounting holes/PCB layouts see page 561

L'IMPULSION | Retrouvez nous sur www.limpulsion.fr

Series N 50 Ω – cable connectors

Right angle cable plugs (male)

For flexible cables
- Cable entry crimp
- Centre contact soldered
- Taper sleeves see page 554



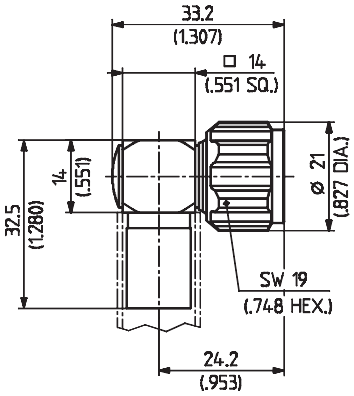

HUBER+SUHNER type	Item no.	Cable group	Packaging	Assembly instruction	Crimp insert	Weight
16_N-50-7-22/133_NE	22651794	S32 (S_07262_BD)	single	9094	D	50.0 g/1.75 oz.

For flexible cables
- Cable entry crimp
- Centre contact soldered
- Degree of protection IP67
- Taper sleeves see page 554



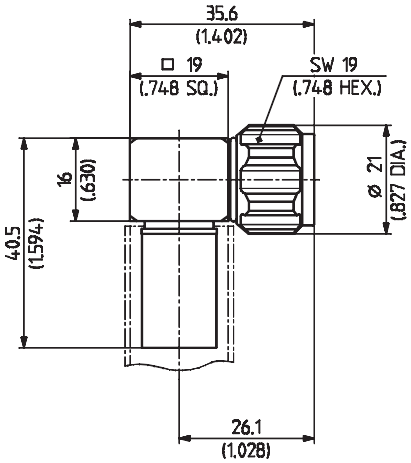

HUBER+SUHNER type	Item no.	Cable group	Packaging	Assembly instruction	Crimp insert	Weight
16_N-50-10-1/103_UV	23002552	S39 (S_10162_B-11)	bulk 20 pcs.	27357	12.4	50.0 g/1.75 oz. [1]

[1] Centre contact not nickel underplated

Cable groups see page 32 | Assembly tools see page 531 | Mounting holes/PCB layouts see page 561

L'IMPULSION Retrouvez nous sur www.limpulsion.fr

Series N 50 Ω – cable connectors

Right angle cable plugs (male)

For flexible cables
- HUBER+SUHNER full crimp
- Taper sleeves see page 554

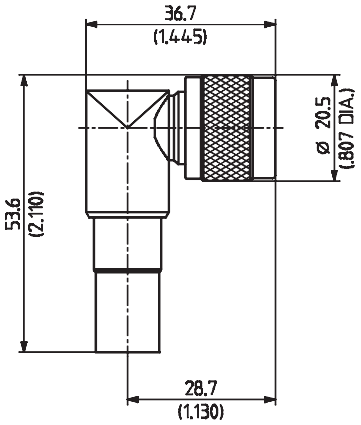



HUBER+SUHNER type	Item no.	Cable group	Packaging	Assembly instruction	Crimp insert	Weight
16_N-50-7-28/133_NE	22652040	U33 (RG_393_/U, ENVIROFLEX_B393)	single	27064	4 D	63.6 g/2.23 oz.
16_N-50-7-29/133_NE	22651494	U29, U42 (RG_213_/U, RADOX_RF_213)		9009	3 D	65.0 g/2.28 oz.
16_N-50-7-36/133_NE	22651495	U32, U43 (RG_214_/U, ENVIROFLEX_B214)		9009	3 D	66.0 g/2.31 oz.

Straight cable jacks (female)

For semi-rigid cables
- Cable entry soldered
- Centre contact soldered

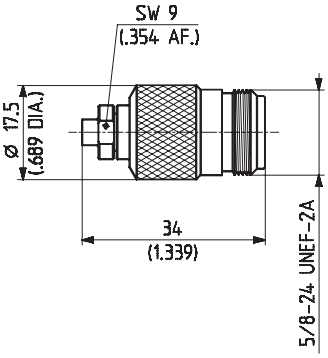



HUBER+SUHNER type	Item no.	Cable group	Packaging	Assembly instruction	Frequency range (GHz)	Weight
21_N-50-2-14/133_NE [1]	22642666	Y3, Y11, Y16 (EZ_86)	single	9073	DC to 18	38.0 g/1.33 oz.
21_N-50-3-11/133_NE [1]	22543921	Y5, Y12, Y17 (EZ_141)		9005	DC to 18	38.0 g/1.33 oz.

[1] Centre contact not nickel underplated

Cable groups see page 32 | Assembly tools see page 531 | Mounting holes/PCB layouts see page 561

L'IMPULSION | Retrouvez nous sur www.limpulsion.fr

Series N 50 Ω – cable connectors

Straight cable jacks (female)

For flexible cables

- Cable entry clamp
- Centre contact soldered



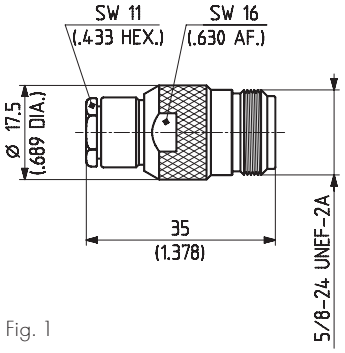

Fig. 1

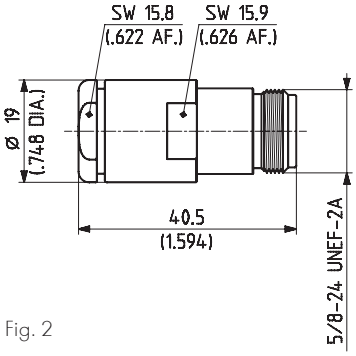

Fig. 2

HUBER+SUHNER type	Item no.	Cable group	Packaging	Assembly instruction	Weight	Fig.
21_N-50-3-5/133_NE	22543504	U7, U9, U11 (RG_223_/U, ENVIROFLEX_B223)	single	3017	38.0 g/1.33 oz.	1
21_N-50-7-8/133_NE	22542254	U29, U32, X11 (RG_213_/U, RADOX_RF_213)		3008	50.0 g/1.75 oz.	2

For flexible cables

- HUBER+SUHNER full crimp
- Taper sleeves see page 554



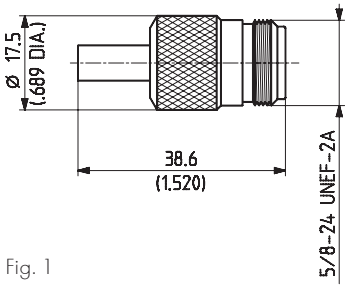

Fig. 1

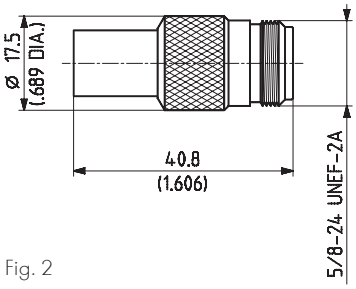

Fig. 2

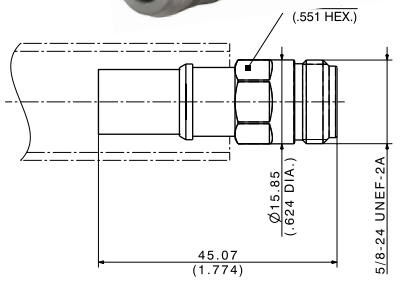

Fig. 3

HUBER+SUHNER type	Item no.	Cable group	Packaging	Assembly instruction	Crimp insert	Weight	Fig.
21_N-50-3-7/133_NE	22542229	U7 (RG_58_C/U, ENVIROFLEX_B58)	single	3063	2 B	36.0 g/1.26 oz.	1
21_N-50-3-8/133_NE	22542231	U9, U39 (RG_223_/U, ENVIROFLEX_B223)		3063	2 B	36.0 g/1.26 oz.	1
21_N-50-3-12/133_NE	22651795	U11, U41 (RG_400_/U, ENVIROFLEX_400)		3063	2 B	35.0 g/1.23 oz.	1
21_N-50-7-13/133_NE	22542257	U29, U42 (RG_213_/U, RADOX_RF_213)		3061	3 D	38.0 g/1.33 oz.	2
21_N-50-7-14/133_NE	22542258	U32, U43 (RG_214_/U, ENVIROFLEX_B214)		3061	3 D	37.0 g/1.30 oz.	2
21_N-50-7-32/133_NE	84119763	U30, X32 (SPUMA_400, SPUMA_400-FR-01, SPUMA_400-RS-FR)		344575	4 D	31.5 g/1.11 oz.	3

Cable groups see page 32 | Assembly tools see page 531 | Mounting holes/PCB layouts see page 561

L'IMPULSION
Retrouvez nous sur
www.limpulsion.fr

Series N 50 Ω – cable connectors

Straight cable jacks (female)

For flexible cables

- HUBER+SUHNER full crimp
- Taper sleeves see page 554
- Degree of protection IP66

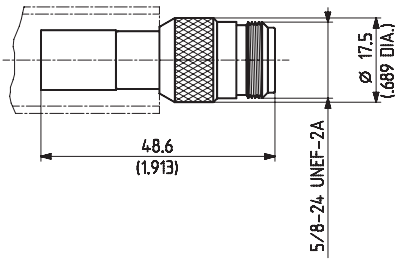



HUBER+SUHNER type	Item no.	Cable group	Packaging	Assembly instruction	Crimp insert	Weight
21_N-50-7-20/133_NE	22651796	S32 (S_07262_BD)	single	9067	4 D	37.0 g/1.30 oz.

For flexible cables

- Cable entry crimp
- Centre contact plugged-in
- Degree of protection IP67



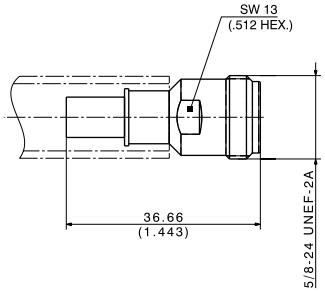

Fig. 1

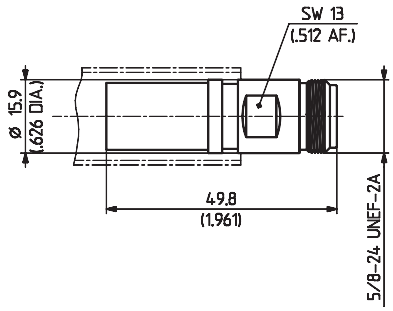

Fig. 2

HUBER+SUHNER type	Item no.	Cable group	Packaging	Assembly instruction	Crimp insert	Weight	Fig.
21_N-50-4-6/133_NH	84110983	S28 (SPUMA_240)	bulk 100 pcs.	291867	6.5	22.8 g/0.8 oz.	1
21_N-50-10-1/133_UF [1]	23003072	S39 (S_10162_B-11)	bulk 50 pcs.	27356	12.4	38.1 g/1.33 oz.	2

Straight bulkhead cable jacks (female)

For semi-rigid cables

- Cable entry soldered
- Centre contact soldered
- Mounting hole ML 12
- With panel seal
- Insulating washers see page 556

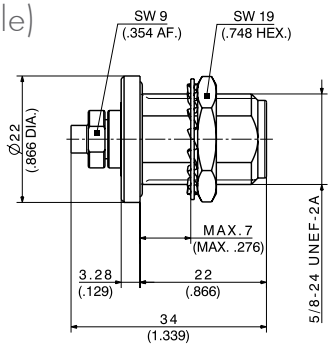



HUBER+SUHNER type	Item no.	Cable group	Packaging	Assembly instruction	Frequency range (GHz)	Weight
24_N-50-2-14/133_NE	22544637	Y3, Y11, Y16 (EZ_86)	single	9073	DC to 12.4	39.0 g/1.37 oz.
24_N-50-3-14/133_NE	22542300	Y5, Y12, Y17 (EZ_141)		9005	DC to 12.4	39.0 g/1.37 oz.

[1] Centre contact not nickel underplated

Cable groups see page 32 | Assembly tools see page 531 | Mounting holes/PCB layouts see page 561

L'IMPULSION | Retrouvez nous sur www.limpulsion.fr

Series N 50 Ω – cable connectors

Straight cable jacks (female)

For semi-rigid cables

- Cable entry soldered
- Centre contact plugged-in
- Body material: stainless steel
- Mounting hole ML 12
- With panel seal
- Insulating washers see page 556



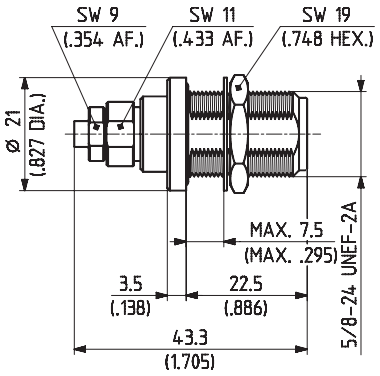

HUBER+SUHNER type	Item no.	Cable group	Packaging	Assembly instruction	Frequency range (GHz)	Weight
24_N-50-3-51/19-_NE	22642344	Y5, Y12 (EZ_141)	single	9006	DC to 18	45.0 g/1.58 oz.

For flexible cables

- Cable entry clamp
- Centre contact soldered
- With panel seal
- Insulating washers see page 556



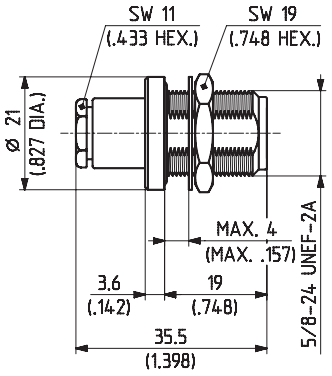

HUBER+SUHNER type	Item no.	Cable group	Packaging	Assembly instruction	Mounting hole	Weight
24_N-50-2-1/133_NE	22641239	U2 (RG_316_/U, ENVIROFLEX_316)	single	9150	ML 12	42.0 g/1.47 oz.

Cable groups see page 32 | Assembly tools see page 531 | Mounting holes/PCB layouts see page 561

L'IMPULSION Retrouvez nous sur www.limpulsion.fr

Series N 50 Ω – cable connectors

Straight bulkhead cable jacks (female)

For flexible cables

- Cable entry clamp
- Centre contact soldered
- With panel seal
- Insulating washers see page 556



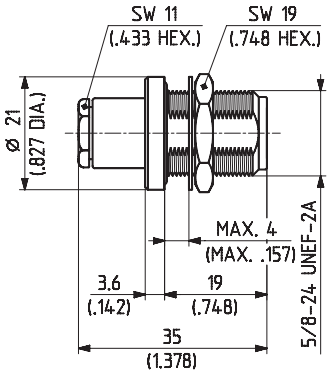

Fig. 1

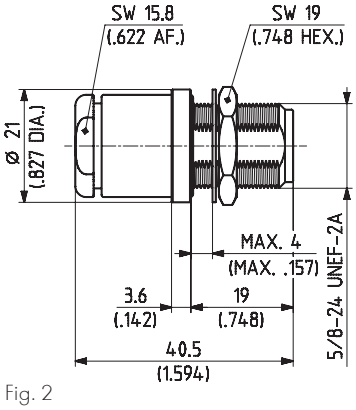

Fig. 2

HUBER+SUHNER type	Item no.	Cable group	Packaging	Assembly instruction	Mounting hole	Weight	Fig.
24_N-50-3-10/133_NE	22542295	U7, U9, U11 (RG_58_C/U, ENVIROFLEX_B58)	single	9150	ML 12	41.0 g/1.44 oz.	1
24_N-50-7-8/133_NE	22542323	U29, U32 (RG_214_/U, ENVIROFLEX_B214)		3008	ML 12	53.0 g/1.86 oz.	2

For flexible cables

- HUBER+SUHNER full crimp
- Taper sleeves see page 554
- Insulating washers see page 556
- Mounting hole ML 12



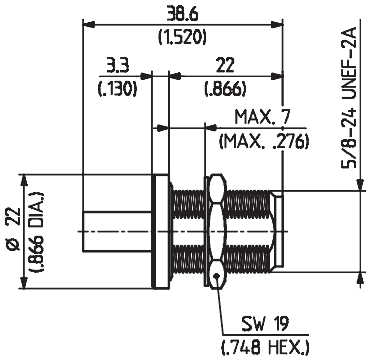

Fig. 1

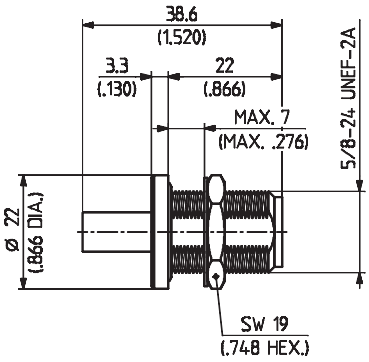

Fig. 2

HUBER+SUHNER type	Item no.	Cable group	Packaging	Assembly instruction	Crimp insert	Weight	Fig.
24_N-50-2-4/133_NE	22650170	U2 (RG_316_/U, ENVIROFLEX_316)	single	9068	1 A	35.2 g/1.23 oz.	1
24_N-50-2-117/133_NE	22660124	U4 (K_02252_D, ENVIROFLEX_316_D)		9068	1 A	36.1 g/1.26 oz.	1
24_N-50-4-17/133_UE	22651789	S16 (S_04262_D-09)		3063	2 C	37.3 g/1.31 oz.	2 [1]

* Has to be crimped with large crimp tool or table press! Centre contact not nickel underplated

Cable groups see page 32 | Assembly tools see page 531 | Mounting holes/PCB layouts see page 561

Series N 50 Ω – cable connectors

Straight bulkhead cable jacks (female)

For flexible cables

- HUBER+SUHNER full crimp
- Taper sleeves see page 554
- Insulating washers see page 556
- Mounting hole ML 12



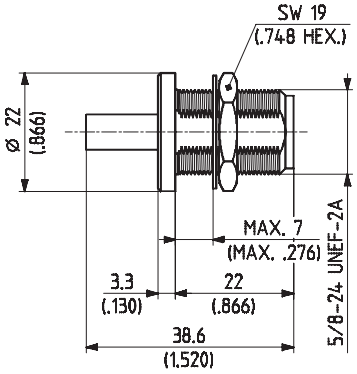

HUBER+SUHNER type	Item no.	Cable group	Packaging	Assembly instruction	Crimp insert	Weight
24_N-50-3-11/133_NE	22542296	U7 (RG_58_C/U, ENVIROFLEX_B58)	single	3063	2 B	38.0 g/1.33 oz. *
24_N-50-3-12/133_NE	22542297	U9 (RG_223_/U, ENVIROFLEX_B223)				

* Has to be crimped with large crimp tool or table press!

For flexible cables

- HUBER+SUHNER full crimp
- Taper sleeves see page 554
- Insulating washers see page 556
- Mounting hole ML 12



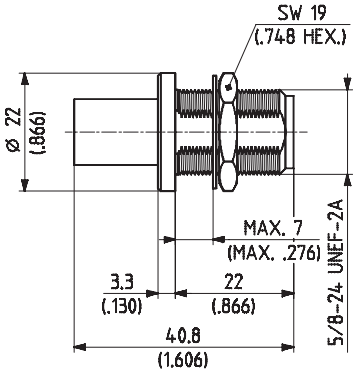

HUBER+SUHNER type	Item no.	Cable group	Packaging	Assembly instruction	Crimp insert	Weight
24_N-50-7-14/133_NE	22542326	U29, U42 (RG_213_/U, RADOX_RF_213)	single	3061	3 D	40.0 g/1.40 oz.
24_N-50-7-15/133_NE	22542327	U32 (RG_214_/U, ENVIROFLEX_B214)				

Cable groups see page 32 | Assembly tools see page 531 | Mounting holes/PCB layouts see page 561

L'IMPULSION
Retrouvez nous sur
www.limpulsion.fr

Series N 50 Ω – cable connectors

Straight bulkhead cable jacks (female)

For flexible cables

- HUBER+SUHNER full crimp
- Taper sleeves see page 554
- Insulating washers see page 556
- Mounting hole ML 12



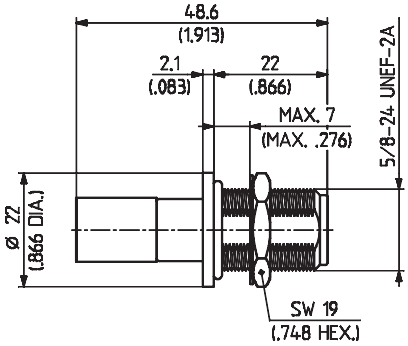

HUBER+SUHNER type	Item no.	Cable group	Packaging	Assembly instruction	Crimp insert	Weight
24_N-50-7-24/133_NE	22649912	U33 (RG_393_/U, ENVIROFLEX_393)	single	27064	4 D	39.3 g/1.38 oz.

Cable groups see page 32 | Assembly tools see page 531 | Mounting holes/PCB layouts see page 561

L'IMPULSION | Retrouvez nous sur www.limpulsion.fr

Series N 50 Ω – cable connectors

Straight panel cable jacks (female)



For semi-rigid cables

- Cable entry soldered
- Centre contact soldered
- Mounting hole ML 14

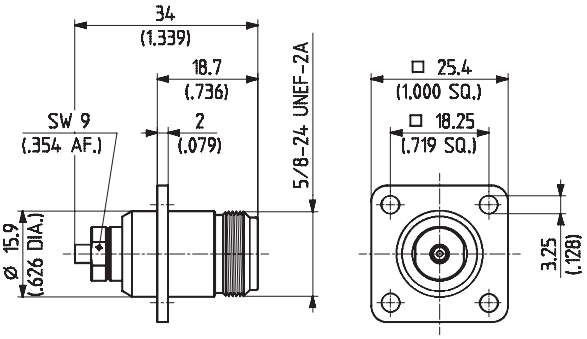

Fig. 1

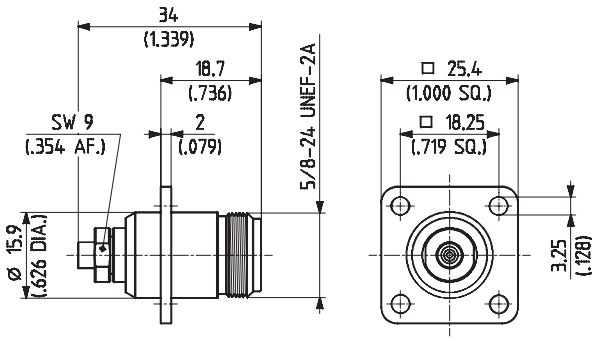

Fig. 2

HUBER+SUHNER type	Item no.	Cable group	Packaging	Assembly instruction	Frequency range (GHz)	Weight	Fig.
25_N-50-2-14/133_NE [1]	22641303	Y3, Y11, Y16 (EZ_86)	single	9073	DC to 12.4	42 g/1.47 oz.	1
25_N-50-3-9/133_NE [1]	22543952	Y5, Y12, Y17 (EZ_141)		9005			2

For flexible cables

- Cable entry clamp
- Centre contact soldered



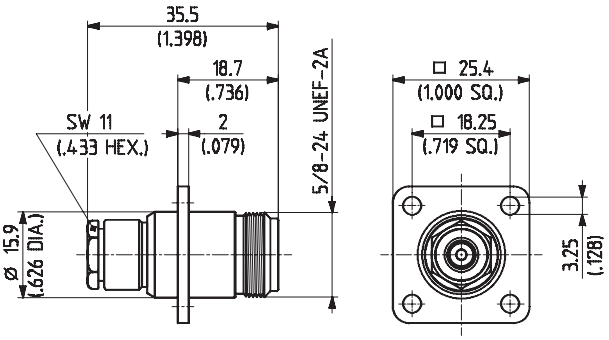

HUBER+SUHNER type	Item no.	Cable group	Packaging	Assembly instruction	Mounting hole	Weight
25_N-50-2-2/133_NE	22542332	U2 (RG_316_/U, ENVIROFLEX_316)	single	3017	ML 14	45.0 g/1.58 oz.
25_N-50-3-4/133_NE	22542342	U7, U9, U11 (RG_58_C/U, ENVIROFLEX_B58)				44.0 g/1.54 oz.

[1] Centre contact NOT captivated

Cable groups see page 32 | Assembly tools see page 531 | Mounting holes/PCB layouts see page 561

L'IMPULSION
Retrouvez nous sur
www.limpulsion.fr

Series N 50 Ω – cable connectors

Straight panel cable jacks (female)

For flexible cables
- Cable entry clamp
- Centre contact soldered



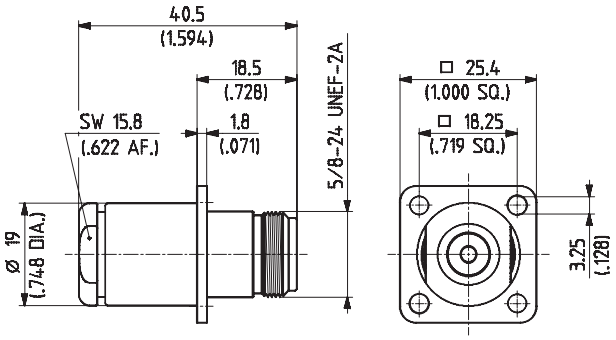

HUBER+SUHNER type	Item no.	Cable group	Packaging	Assembly instruction	Mounting hole	Weight
25_N-50-7-8/133_NE	22542366	U29, U32 (RG_214_/U, ENVIROFLEX_B214)	single	3008	ML 18	55.0 g/1.93 oz.

For flexible cables
- HUBER+SUHNER full crimp
- Taper sleeves see page 554
- Mounting hole ML 14



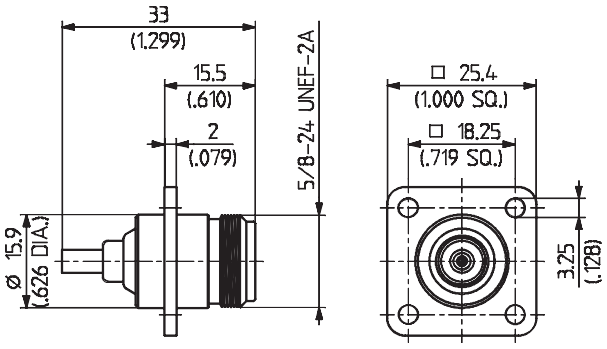

Fig. 1

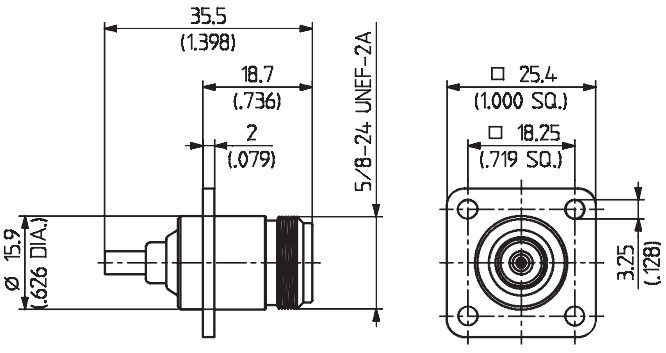

Fig. 2

HUBER+SUHNER type	Item no.	Cable group	Packaging	Assembly instruction	Crimp insert	Weight	Fig.
25_N-50-2-9/133_NE	22651072	U2 (RG_316_/U, ENVIROFLEX_316)	single	9068	1 A	34.5 g/1.21 oz.	1
25_N-50-2-10/133_NE	22651054	U4 (K_02252_D, ENVIROFLEX_316_D)				38.6 g/1.35 oz.	2

Cable groups see page 32 | Assembly tools see page 531 | Mounting holes/PCB layouts see page 561

L'IMPULSION | Retrouvez nous sur www.limpulsion.fr

Series N 50 Ω – cable connectors

Straight panel cable jacks (female)

For flexible cables
- HUBER+SUHNER full crimp
- Taper sleeves see page 554
- Mounting hole ML 14

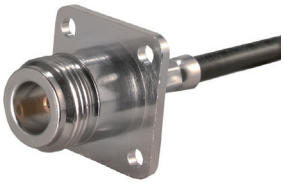

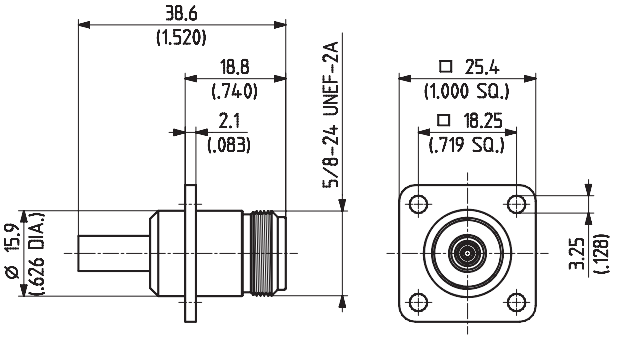

Fig. 1

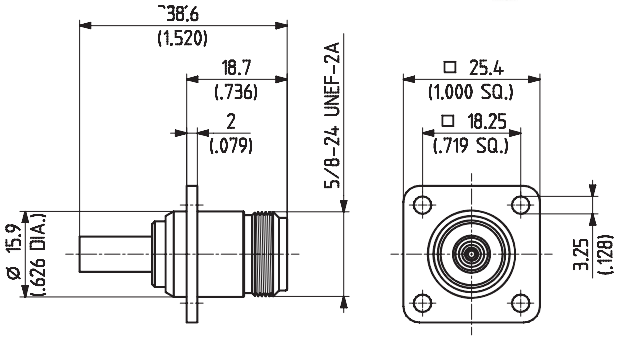

Fig. 2

HUBER+SUHNER type	Item no.	Cable group	Packaging	Assembly instruction	Crimp insert	Weight	Fig.
25_N-50-3-6/133_NE	22542346	U7 (RG_58_C/U, ENVIROFLEX_B58)	single	3063	2 B	39.0 g/1.37 oz.	1
25_N-50-3-7/133_NE	22542348	U9 (RG_223_/U, ENVIROFLEX_B223)				39.0 g/1.37 oz.	1
25_N-50-3-20/133_NE	22649913	U11 (RG_400_/U, ENVIROFLEX_400)				37.0 g/1.30 oz.	2

For flexible cables
- HUBER+SUHNER full crimp
- Taper sleeves see page 554
- Mounting hole ML 14



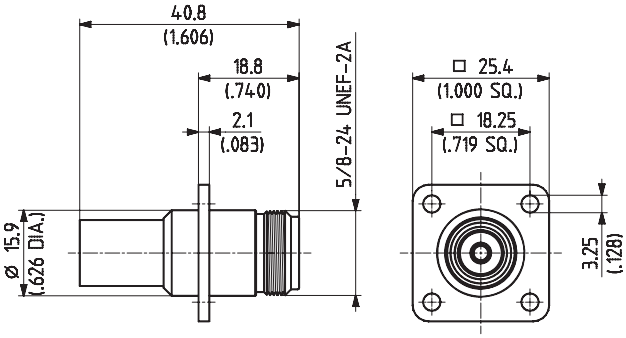

HUBER+SUHNER type	Item no.	Cable group	Packaging	Assembly instruction	Crimp insert	Weight
25_N-50-7-13/133_NE	22542369	U29 (RG_213_/U, RADOX_RF_213)	single	3061	3 D	42.0 g/1.47 oz.
25_N-50-7-14/133_NE	22542370	U32 (RG_214_/U, ENVIROFLEX_B214)				

Cable groups see page 32 | Assembly tools see page 531 | Mounting holes/PCB layouts see page 561

L'IMPULSION
Retrouvez nous sur
www.limpulsion.fr

Series N 50 Ω – receptacles with solder end

Receptacles, plug (male)

- Panel mounted

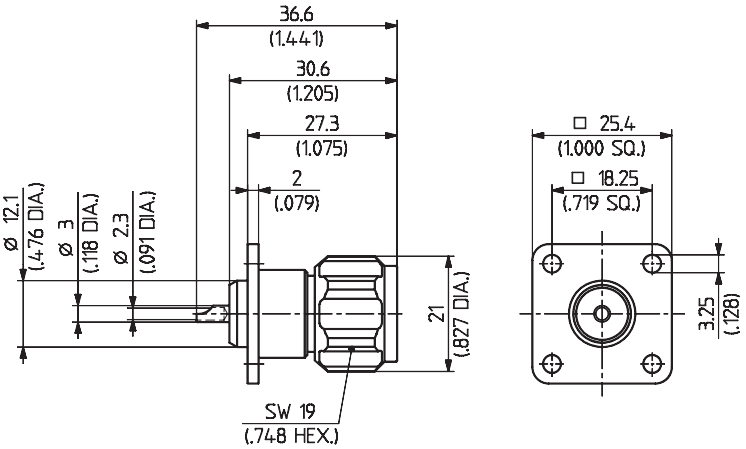



HUBER+SUHNER type	Item no.	Packaging	Mounting hole	Weight
13_N-50-0-1/133_NE	22542173	single	ML 16	46.0 g/1.61 oz.

Receptacles, jacks (female)

- Panel mounted

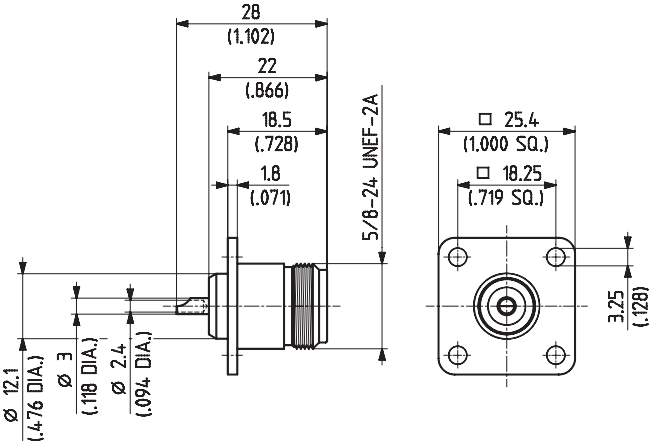



HUBER+SUHNER type	Item no.	Packaging	Mounting hole	Weight
23_N-50-0-1/133_NE	22542272	single	ML 17	31.0 g/1.09 oz.

Cable groups see page 32 | Assembly tools see page 531 | Mounting holes/PCB layouts see page 561

L'IMPULSION | Retrouvez nous sur www.limpulsion.fr

Series N 50 Ω – receptacles with solder end

Receptacles, jacks (female)

- Bulkhead mounted
- Solder tags see page 557
- With panel seal
- Insulating washers see page 556



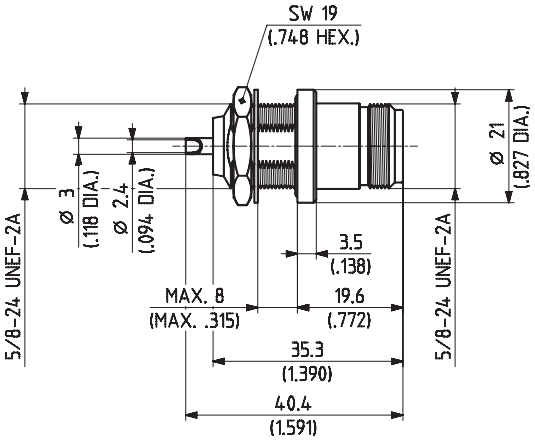

Fig. 1

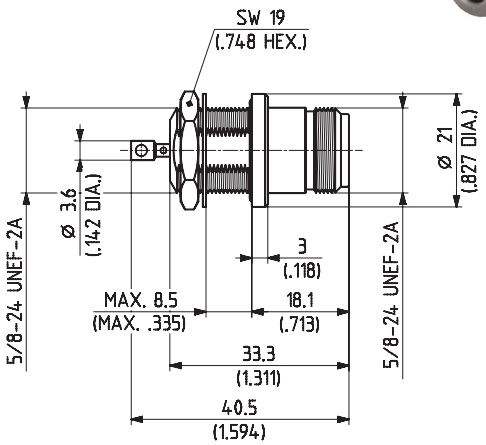

Fig. 2

HUBER+SUHNER type	Item no.	Packaging	Mounting hole	Weight	Notes	Fig.
22_N-50-0-2/133_NE	22542265	single	ML 12	47.0 g/1.65 oz.		1
22_N-50-0-3/133_NE	22644425				hermetically sealed leak rate ≤ 10^{-6} Torr l/s (atm cc/s) [1]	2

- Bulkhead mounted

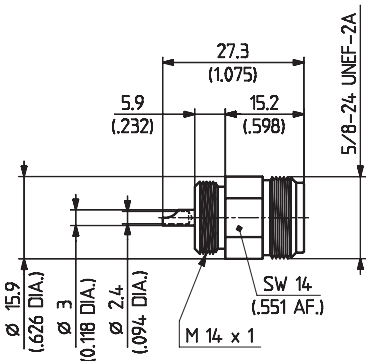



HUBER+SUHNER type	Item no.	Packaging	Weight	Notes
22_N-50-0-23/133_NF	22651448	bulk 50 pcs.	20.8 g/0.73 oz.	without nut and washer (direct screw into panel, thread M 14 × 1)

[1] RoHs compliant – alternative on request

Cable groups see page 32 | Assembly tools see page 531 | Mounting holes/PCB layouts see page 561

L'IMPULSION
Retrouvez nous sur
www.limpulsion.fr

Series N 50 Ω – receptacles with solder end

Receptacles, plugs (male)

- Panel mounted
- Extended dielectric



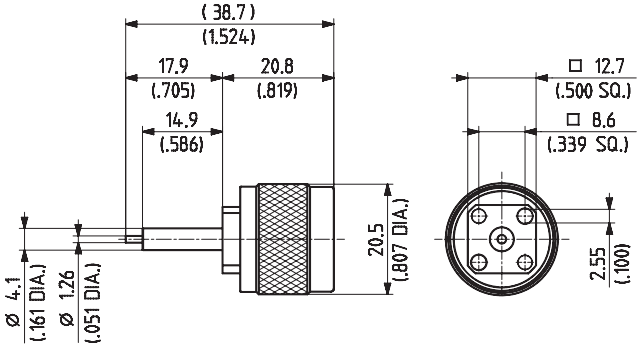

HUBER+SUHNER type	Item no.	Packaging	Weight	Notes
13_N-50-0-30/133_NE	22642831	single	30.0 g/1.05 oz.	SMA flange size

Receptacles, jacks (female)

- Panel mounted
- Extended dielectric



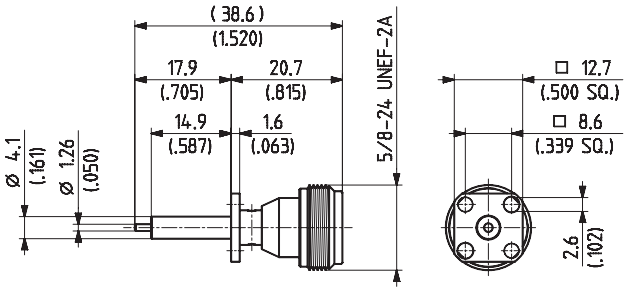

HUBER+SUHNER type	Item no.	Packaging	Weight	Notes
23_N-50-0-30/133_NE	22642835	single	14.0 g/0.49 oz.	SMA flange size

Cable groups see page 32 | Assembly tools see page 531 | Mounting holes/PCB layouts see page 561

L'IMPULSION
Retrouvez nous sur
www.limpulsion.fr

Series N 50 Ω – receptacles with solder end

Receptacles, jacks (female)

- Panel mounted
- Solder pot terminal
- Flush dielectric

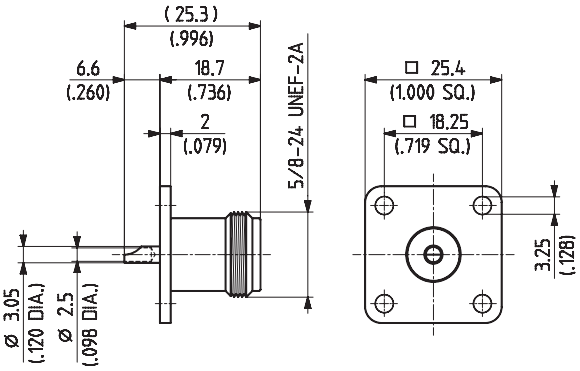

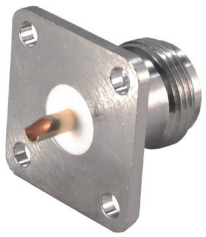

HUBER+SUHNER type	Item no.	Packaging	Weight
23_N-50-0-23/133_NE	22544751	single	24.0 g/0.84 oz.

- End of centre pin slotted
- Panel mounted
- Flush dielectric

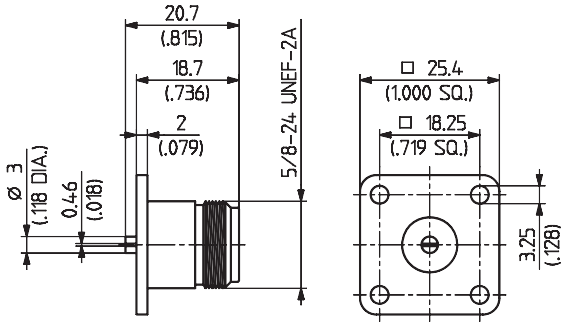



HUBER+SUHNER type	Item no.	Packaging	Weight
23_N-50-0-69/133_NX	22648797	bulk 150 pcs.	27.9 g/0.89 oz.

- Panel mounted
- Solder pot terminal
- Flush dielectric

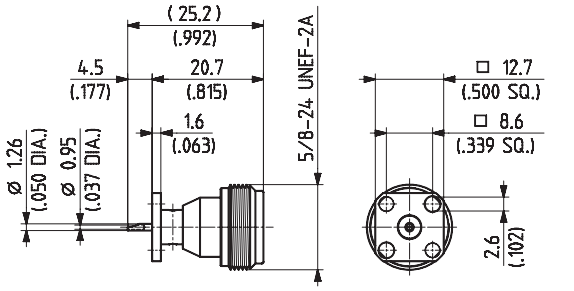



HUBER+SUHNER type	Item no.	Packaging	Weight	Notes
23_N-50-0-31/133_NE	22642836	single	13.6 g/0.48 oz.	SMA flange size

Cable groups see page 32 | Assembly tools see page 531 | Mounting holes/PCB layouts see page 561

L'IMPULSION Retrouvez nous sur www.limpulsion.fr

Series N 50 Ω – stripline launchers

Receptacles, plugs (male)

- Panel mounted
- Tab contact
- Flush dielectric



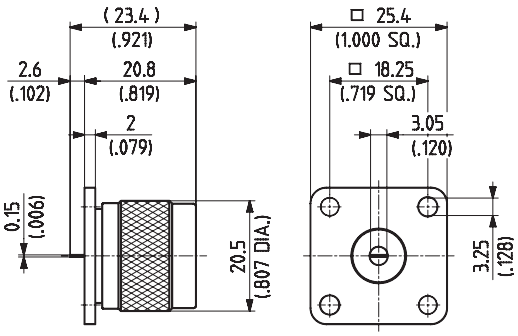

HUBER+SUHNER type	Item no.	Packaging	Weight
13_N-50-0-33/133_NE	22642834	single	36.0 g/1.26 oz.

Receptacles, jacks (female)

- Panel mounted
- Tab contact
- Flush dielectric



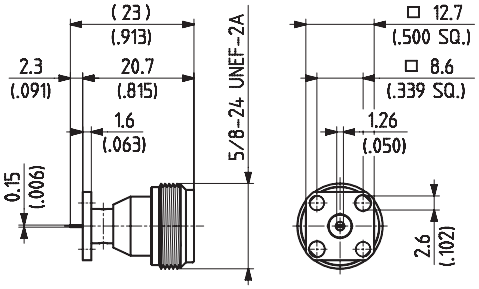

Fig. 1

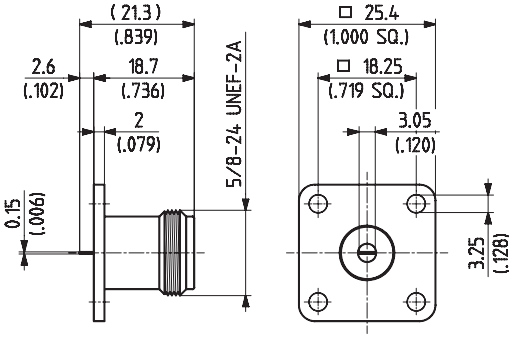

Fig. 2

HUBER+SUHNER type	Item no.	Packaging	Weight	Notes	Fig.
23_N-50-0-16/133_NE	22641166	single	13.5 g/0.47 oz.	SMA flange size	1
23_N-50-0-33/133_NE	22642837		24.5 g/0.86 oz.		2

Cable groups see page 32 | Assembly tools see page 531 | Mounting holes/PCB layouts see page 561

L'IMPULSION
Retrouvez nous sur
www.limpulsion.fr

Series N 50 Ω - protective caps

- Suitable for N 50 Ω and N 75 Ω
- With chain

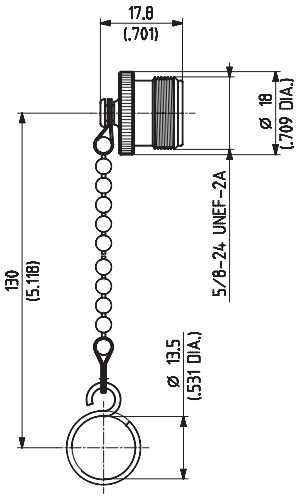

Fig. 1

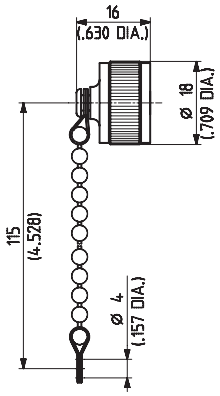

Fig. 2



HUBER+SUHNER type	Item no.	Packaging	Weight	Notes	Fig.
61_N-0-0-1/--3_-E	22542452	single	16.0 g/0.56 oz.	for plugs	1
62_N-0-0-1/--3_-E	22543433		15.0 g/0.53 oz.	for jacks	2

Cable groups see page 32 | Assembly tools see page 531 | Mounting holes/PCB layouts see page 561

L'IMPULSION
Retrouvez nous sur
www.limpulsion.fr

Series N 75 Ω – coaxial connectors

Description

HUBER+SUHNER N connectors are available with 50 Ω and 75 Ω impedance. The screw-type coupling mechanism provides a sturdy and reliable connection.

Compatibility

Center conductors of N 75 Ω connectors have a smaller diameter than those of the 50 Ω version. Therefore 50 Ω and 75 Ω connectors must not be mated with each other.

Content

Description	393
Compatibility	393
Interface dimensions in mm/inches	393
Technical data	394
Cable connectors	395
Receptacles with solder end	397

Interface dimensions (mm/inches)

Plug (male)

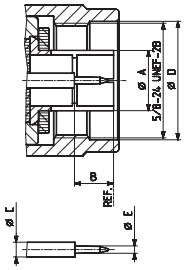

Jack (female)

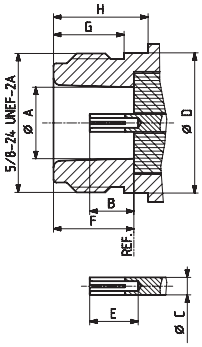

	Plug		Jack	
	min.	max.	min.	max.
A	-	8.38/0.330	8.03/0.316	8.13/0.320
B	5.33/0.210	5.84/0.230	4.75/0.187	5.26/0.207
C	-	2.00/0.079	-	2.00/0.079
D	16.00/0.630	-	-	15.93/0.627
E	1.00/0.039	1.05/0.041	5.33/0.210	-
F	-	-	9.04/0.356	9.19/0.362
G	-	-	6.76/0.266	-
H	-	-	10.72/0.422	-

IP rating (interface, mated) IP68

L'IMPULSION
Retrouvez nous sur
www.limpulsion.fr

Series N 75 Ω – technical data

Electrical data	Requirements
Impedance	75 Ω
Frequency range	DC – 1.5 GHz
Dielectric withstanding voltage (at sea level)	2.5 kV rms, 50 Hz
Working voltage (at sea level)	≤ 1.0 kV rms, 50 Hz
Insulation resistance	≥ 5 • 10^3 MΩ
Contact resistance • Centre contact • Outer contact	 ≤ 1.0 mΩ ≤ 1.0 mΩ
RF leakage (measured at 1 GHz)	≥ 90 dB

Mechanical data	Requirements
Coupling nut torque • Recommended	 0.68 to 1.13 Nm/6.0 to 10.0 in lbs
Coupling nut retention force	≥ 450 N/101.2 lbs
Contact captivation	≥ 28 N/6.3 lbs
Cable retention force [1]	see pages 32 – 41
Durability (matings)	≥ 500

Environmental data	Requirements
Temperature range	–65 to +165 °C/–85 to +329 °F
Climatic category	IEC → 55/155/21
Thermal shock	MIL-STD-202, method 107, condition B
Moisture resistance	MIL-STD-202, method 106
Corrosion	saltspray test acc. to MIL-STD-202, method 101, condition B
Vibration	MIL-STD-202, method 204, condition B
Shock	MIL-STD-202, method 213, condition G

Material data		
Connector parts	Material	Plating
Bodies	brass	SUCOPLATE®
Pin contacts	brass	gold/SUCOPRO® gold plating
Outer contact, slotted	spring bronze	SUCOPLATE®
Female contacts	copper-beryllium alloy spring bronze	gold/SUCOPRO® gold plating
Crimp ferrules	copper	SUCOPLATE®
Insulators, standard version	PTFE or PFA	
Gaskets	silicone rubber	

Performance values are typical for the connector interface. Individual component or connector performance may vary depending on the connector design, attachment (e.g. cable, PCB) or application. For detailed specifications please refer to the specific data sheets on our website www.hubersuhner.com.

[1] Value considers maximum load of the cables without irreversible variations of specifications.

L'IMPULSION | Retrouvez nous sur www.limpulsion.fr

Series N 75 Ω – cable connectors

Straight cable plugs (male)

For flexible cables

- Cable entry clamp
- Centre contact soldered



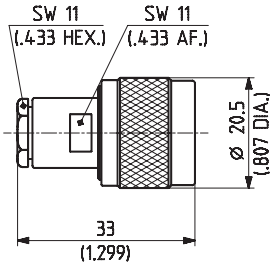

Fig. 1

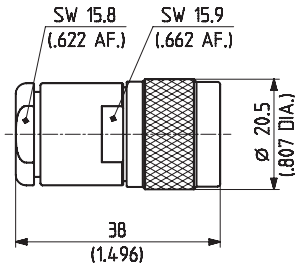

Fig. 2

HUBER+SUHNER type	Item no.	Cable group	Packaging	Assembly instruction	Weight	Fig.
11_N-75-4-3/133_NE	22542467	U16 (RG_59_B/U, RADOX_RF_59)	single	27042	34.0 g/1.19 oz	1
11_N-75-4-6/133_NE	22542475	U18 (G_04133_D)		27042	34.0 g/1.19 oz	1
11_N-75-7-4/133_NE	22542497	U34, U36 (G_07273_D)		3008	48.0 g/1.68 oz.	2

For flexible cables

- HUBER+SUHNER full crimp
- Taper sleeves see page 554



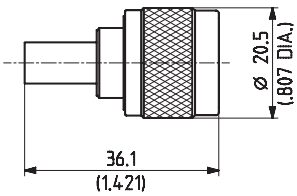

Fig. 1

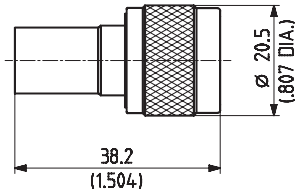

Fig. 2

HUBER+SUHNER type	Item no.	Cable group	Packaging	Assembly instruction	Crimp insert	Weight	Fig.
11_N-75-4-8/133_NE	22542477	U16 (RG_59_B/U, RADOX_RF_59)	single	3063	2 C	30.0 g/1.05 oz.	1
11_N-75-4-9/133_NE	22542478	U18 (G_04133_D)		3063	2 C	30.0 g/1.05 oz.	1
11_N-75-7-16/133_NE	22542511	U34 (RG_11_A/U)		3061	2 D	32.0 g/1.12 oz.	2
11_N-75-7-18/133_NE	22542512	U36 (G_07273_D)		3061	2 D	32.0 g/1.12 oz.	2

Cable groups see page 32 | Assembly tools see page 531 | Mounting holes/PCB layouts see page 561

L'IMPULSION Retrouvez nous sur www.limpulsion.fr

Series N 75 Ω – cable connectors

Straight cable jacks (female)

For flexible cables
- HUBER+SUHNER full crimp
- Taper sleeves see page 554

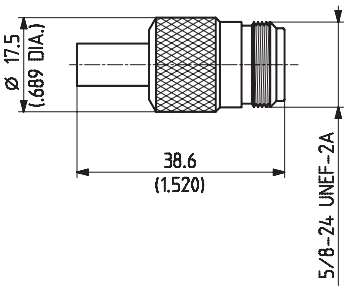



HUBER+SUHNER type	Item no.	Cable group	Packaging	Assembly instruction	Crimp insert	Weight
21_N-75-4-8/133_NE	22640810	U16 (RG_59_B/U, RADOX_RF_59)	single	3063	2 C	34.0 g/1.19 oz.

Straight bulkhead cable jacks (female)

For flexible cables
- Cable entry clamp
- Centre contact soldered
- With panel seal
- Insulating washers see page 556

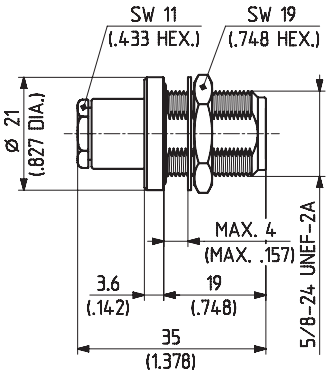



HUBER+SUHNER type	Item no.	Cable group	Packaging	Assembly instruction	Mounting hole	Weight
24_N-75-4-2/133_NE	22543628	U16 (RG_59_B/U, RADOX_RF_59)	single	27042	ML 12	40.0 g/1.40 oz.

Cable groups see page 32 | Assembly tools see page 531 | Mounting holes/PCB layouts see page 561

L'IMPULSION
Retrouvez nous sur
www.limpulsion.fr

Series N 75 Ω – receptacles with solder end

Flange mount, plug (male)

- Panel mounted



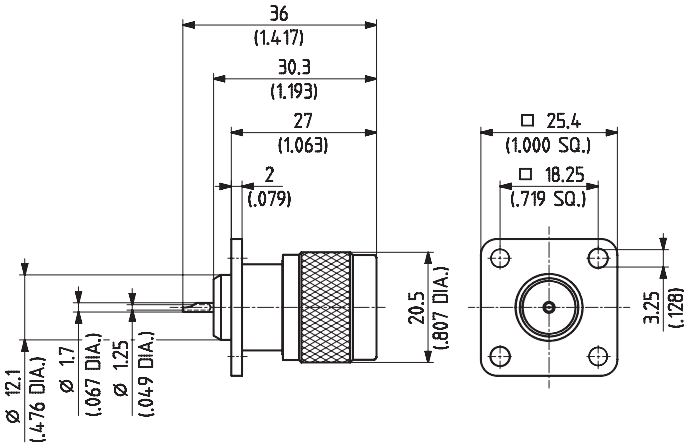

HUBER+SUHNER type	Item no.	Packaging	Mounting hole	Weight
13_N-75-0-1/133_NE	22542522	single	ML 16	45.0 g/1.58 oz.

Flange mount, jack (female)

- Panel mounted



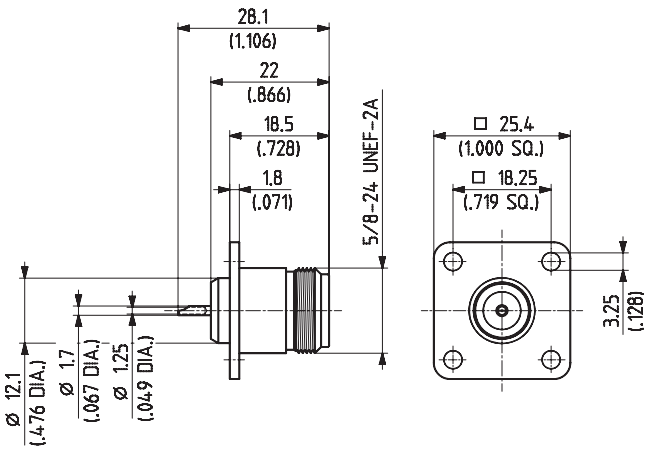

HUBER+SUHNER type	Item no.	Packaging	Mounting hole	Weight
23_N-75-0-1/133_NE	22542575	single	ML 17	30.0 g/1.05 oz.

Cable groups see page 32 | Assembly tools see page 531 | Mounting holes/PCB layouts see page 561

L'IMPULSION
Retrouvez nous sur
www.limpulsion.fr

L'IMPULSION | Retrouvez nous sur www.limpulsion.fr

Series 4.3-10

Description

HUBER+SUHNER 4.3-10 connectors offer very low PIM performance togehter with weight and compactness advantages. A key feature of this connector is the separation of the electrical and mechanical plane, which results in a lower coupling torque and the possiblility of offering the connector with screw, hand-screw and quick-lock design, thus simplifying the installation effort and offering for all mechanisms a very high and reliable electrical performance independently from the torque applied.

Content

Description	399
Applications	399
Features	399
Benefits	399
Technical data	400
Cable connectors	402
Receptacles	405
Protective caps	406
4.3-10 Plus	407
Calibration with precision adapters	408

Applications

Superior electrical and mechanical features of 4.3-10 make it an ideal interface for base stations, distributed antenna systems (DAS), in-building architecture and small cell applications.

Features

- Radial contact
- Compact size (25.4 mm flange)
- 40 % lower weight than 7/16
- Multiple coupling options
- Ease of installation
- Protection of electrical contact points

Benefits

- Excellent PIM and RL independent of torque
- Space saving
- Lightweight antennas and radios
- Flexible installation
- Lower cost of ownership
- No performance degradation due to infield damages



universal jack



hand screw



screw



quick-lock

L'IMPULSION
Retrouvez nous sur
www.limpulsion.fr

Series 4.3-10 – technical data

The 4.3-10 interface dimensions conform to the international standards IEC 61169-54.

Electrical data	IEC 61169-1	
Nominal impedance		50 Ω
Frequency range		up to 12 GHz
Reflection factor (interface only)	9.2.1.	0.015 max. DC to 4 GHz (RL ≥ 36 dB) 0.025 max. 4 – 6 GHz (RL ≥ 32 dB)
Centre and outer contact resistance	9.2.3.	initial ≤ 1.0 mΩ after conditioning ≤ 1.5 mΩ
Insulation resistance	9.2.5.	initial ≥ 5 GΩ after conditioning ≥ 200 MΩ
Proof voltage at sea level r.m.s. values at 40 Hz to 60 Hz	9.2.6.	2500 V
Screening effectiveness • Torque/screw type • Hand screw and quick-lock	9.2.8.	 DC to 6 GHz: ≥ 120 dB DC to 3 GHz: ≥ 90 dB; 3 to 6 GHz: ≥ 70 dB
Intermodulation • 2 × 20 W • 2 × 40 W	IEC 62037-3	 –166 dBc (0.4 to 4 GHz) –160 dBc (0.4 to 4 GHz)

Mechanical data	IEC 61169-1	
Mechanical operations/matings	9.3.15	> 100 operations
Centre contact captivation (axial force)	9.3.5.	30 N
Coupling torque (screw)	9.3.6.	5 Nm
Engagement force (quick-lock)	9.3.6.	typ. 100 N
Separation force (quick-lock)	9.3.6.	typ. 80 N
Coupling mechanism retention force (quick-lock)	9.3.11.	≥ 450 N
Vibration	9.3.3.	100 m/s², 10 g acceleration, 2 – 200 Hz
Shock	9.3.14.	981 m/s², 100 g acceleration, ½ sin 6 ms

Environmental data	IEC 61169-1	
Temperature range		–55 to +90 °C
Climatic category [1)]		40/85/21
Sealing	IEC 60529	IP68 2.5 bar, 1 h, 25 °C
Salt mist	9.4.6.	duration of spraying 48 h (720 h on request)
High temperature endurance	9.6.	250 h at 85 °C

Performance values are typical for the connector interface. Individual component or connector performance may vary depending on the connector design, attachment (e.g. cable, PCB) or application. For detailed specifications please refer to the specific data sheets on our website www.hubersuhner.com.

[1)] For certain connectors the upper temperature limit is restricted by the cable characteristics. Reference should be made to the relevant cable specification.

L'IMPULSION | Retrouvez nous sur www.limpulsion.fr

Series 4.3-10 – admissible RF power

The maximum temperature usually occurs on the connector inner conductor. When connectors are employed in a coaxial cable assembly, the connector should have a center conductor diameter that is equal to or larger than the cable center conductor diameter in order to maximise the power handling of the assembly.

The curves are the results of a typical application and are simulation results. Curves may vary depending on the connector. For specific questions please ask our offices.

T_{amb} = 25 °C/sea level
VSWR = 1.0

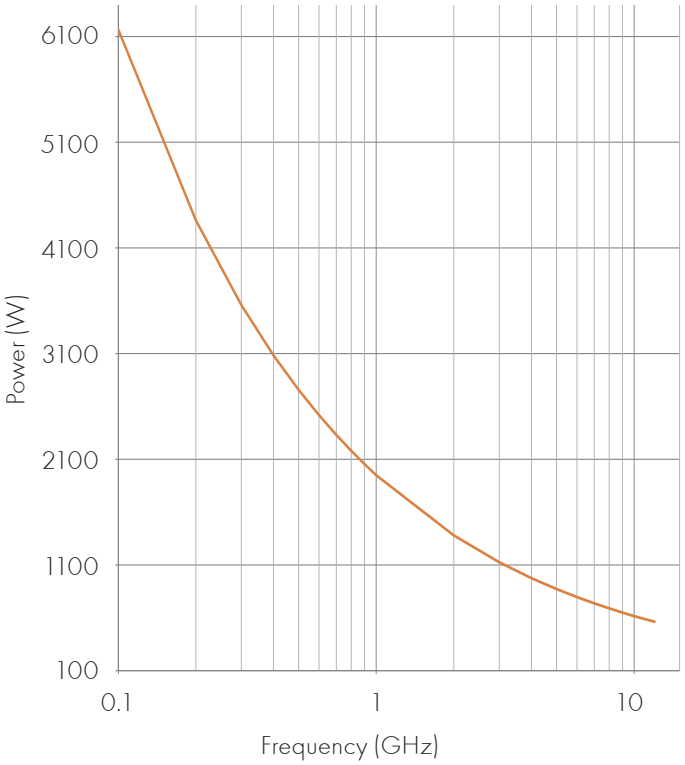

Material data		
Connector parts	Material	Plating
Bodies	brass	SUCOPLATE®, Tin-Nickel , silver, Nickel-Phosphorus
Outer contact	spring bronze	silver
Insulators	PTFE	
Centre contact	CuBe/spring bronze, brass	silver
Gaskets	MVQ	
Coupling nut	brass	SUCOPLATE®

Performance values are typical for the connector interface. Individual component or connector performance may vary depending on the connector design, attachment (e.g. cable, PCB) or application. For detailed specifications please refer to the specific data sheets on our website www.hubersuhner.com.

Series 4.3-10 – cable connectors

Straight cable plugs (male)



For Semi-rigid cables, Sucoform and Multiflex cables
- Cable entry soldered
- Centre contact soldered

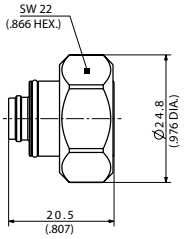

Fig. 1

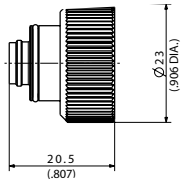

Fig. 2

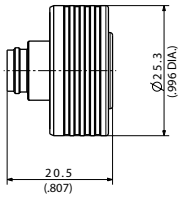

Fig. 3

HUBER+SUHNER type	Item no.	Cable group (example)	Packaging	Fig.
11_4310-50-5-X1/003_-H 11_4310-50-5-X1/003_-E	85020471 85021044	Y14 (SUCOFORM_250-1, EZ_250)	bulk 100 pcs single	1
11_4310-50-5-Y1/003_-E	85021045	Y14 (SUCOFORM_250-1, EZ_250)	single	2
11_4310-50-5-Z1/003_-H 11_4310-50-5-Z1/003_-E	85020523 85021047	Y14 (SUCOFORM_250-1, EZ_250)	bulk 100 pcs single	3

X: torque, Y: hand screw, Z: quick-lock

For semi-rigid, Sucoform and Multiflex cables
- Cable entry soldered
- Centre contact soldered



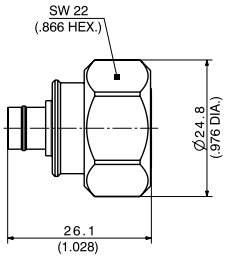

HUBER+SUHNER type	Item no.	Cable group (example)	Packaging
11_4310-50-3-X2/033_-H	85089256	Y12 (SUCOFORM_141_Cu)	bulk 100 pcs.

X: torque

Flexible cable
- Center contact plugged
- Outer contact: Crimped

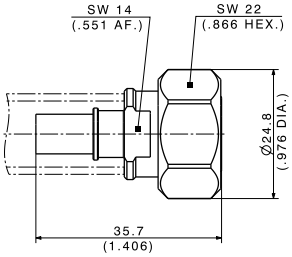

HUBER+SUHNER type	Item no.	Cable group (example)	Packaging
11_4310-50-4-X1/033_-H	85078855	X28 (Spuma_240, LMR240)	bulk

X: torque

Cable groups see page 32 | Assembly tools see page 531 | Mounting holes/PCB layouts see page 561

L'IMPULSION | Retrouvez nous sur www.limpulsion.fr

Series 4.3-10 – cable connectors

Right angle cable plugs (male)

For semi-rigid cables, Sucoform and Multiflex cables

- Cable entry soldered
- Centre contact soldered



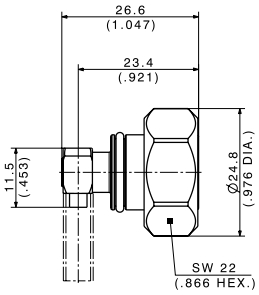

Fig. 1

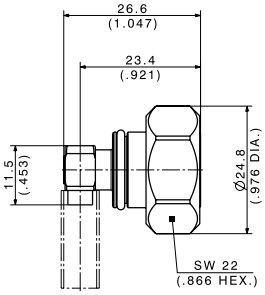

Fig. 2

HUBER+SUHNER type	Item no.	Cable group (example)	Packaging	Fig.
16_4310-50-2-X2/003_-H	85029015	Y3 (SUCOFORM_86)	bulk 100 pcs.	1
16_4310-50-3-X1/003_-H	85064160	Y12 (SUCOFORM_141)		2

X: torque

Right angle cable plugs (male)

For semi-rigid cables, Sucoform and Multiflex cables

- Cable entry soldered
- Centre contact soldered



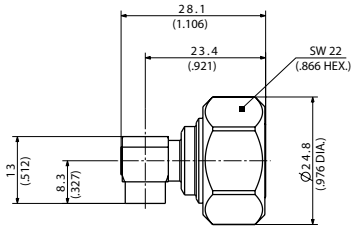

Fig. 1

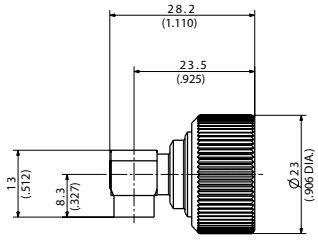

Fig. 2

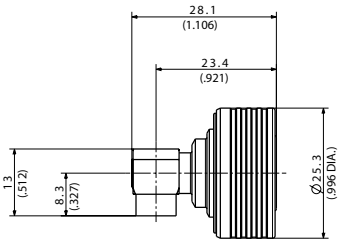

Fig. 3

HUBER+SUHNER type	Item no.	Cable group (example)	Packaging	Fig.
16_4310-50-5-X1/003_-E	85021049	Y14 (SUCOFORM_250-1)	bulk 100 pcs single	1
16_4310-50-5-Y1/003_-H 16_4310-50-5-Y1/003_-E	85020525 85021070	Y14 (SUCOFORM_250-1)	bulk 100 pcs single	2
16_4310-50-5-Z1/003_-H 16_4310-50-5-Z1/003_-E	85020526 85021071	Y14 (SUCOFORM_250-1)	bulk 100 pcs single	3

X: torque, Y: hand screw, Z: quick-lock

Cable groups see page 32 | Assembly tools see page 531 | Mounting holes/PCB layouts see page 561

L'IMPULSION
Retrouvez nous sur
www.limpulsion.fr

Series 4.3-10 – cable connectors

Straight cable jacks (female)



For semi-rigid cables, Sucoform and Multiflex cables

- Cable entry soldered
- Centre contact soldered

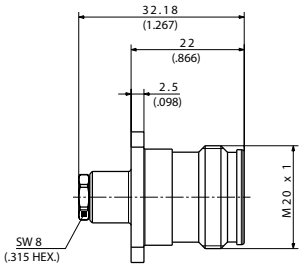

Fig. 1

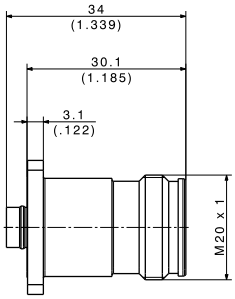

Fig. 2

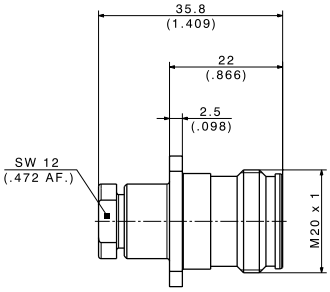

Fig. 3

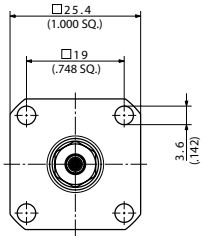

Flange size for fig 1, 2 and 3

HUBER+SUHNER type	Item no.	Cable group (example)	Packaging	Notes	Fig.
25_4310-50-2-1/003_-Y 25_4310-50-2-1/003_-E	85020530 85021079	Y16 (SUCOFORM_86)	tray 20 pcs single	for cable type 0.086	1
25_4310-50-3-6/003_-Y	85116109	Y5, Y12 (Sucoform/EZ 141)	tray	for cable type 0.141	2
25_4310-50-5-1/003_-Y	85064165	Y14 (SUCOFORM_250-1	tray 50 pcs	for cable size 0.250	3

For semi-rigid, Sucoform and Multiflex cables

- Cable entry soldered
- Centre contact soldered



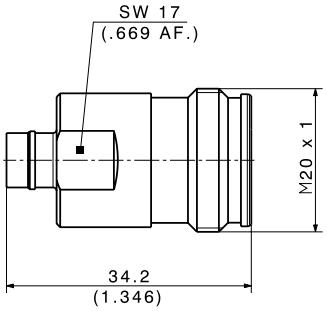

Fig. 1

HUBER+SUHNER type	Item no.	Cable group (example)	Packaging	Fig.
21_4310-50-3-1/003_-Y	85068552	Y12 (SUCOFORM_141_Cu)	tray 50 pcs.	1

Cable groups see page 32 | Assembly tools see page 531 | Mounting holes/PCB layouts see page 561

L'IMPULSION | Retrouvez nous sur www.limpulsion.fr

Series 4.3-10 – receptacles

Straight panel receptacle (jack)



With coaxial end

- 4 hole, 1 inch flange

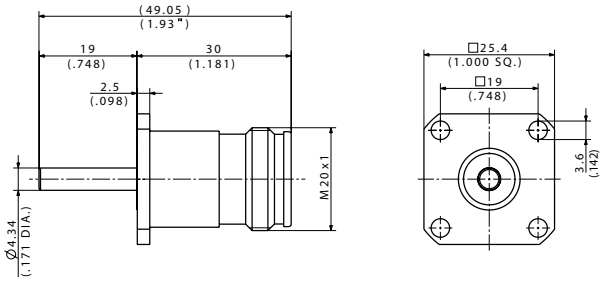

Fig. 1

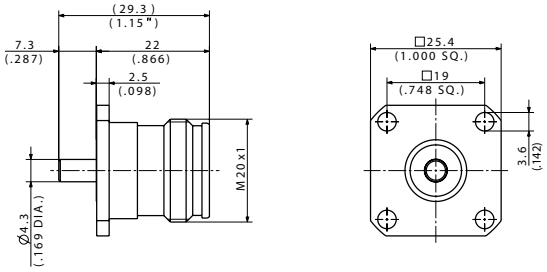

Fig. 2

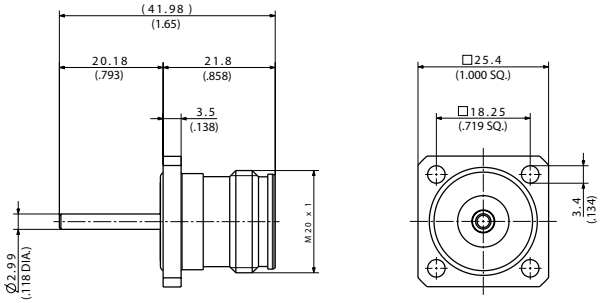

Fig. 3

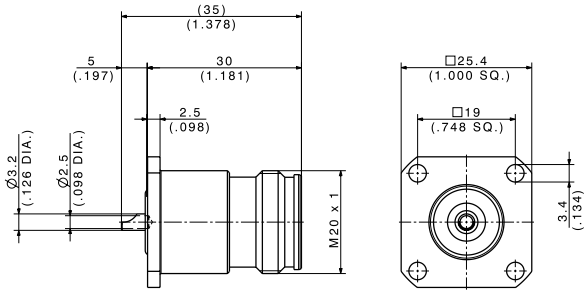

Fig. 4

HUBER+SUHNER type	Item no.	Packaging	Notes	Fig.
23_4310-50-0-1/003_-Y 23_4310-50-0-1/003_-E	85020598 85021072	tray 40 pcs single		1
23_4310-50-0-2/003_-Y 23_4310-50-0-2/003_-E	85020599 85021073	tray 60 pcs single		2
23_4310-50-0-5/003_-Y 23_4310-50-0-5/003_-E	85021011 85020470	tray 60 pcs single	with panel seal	3
23_4310-50-0-16/003_-Y	85064166	tray 50 pcs		4

Cable groups see page 32 | Assembly tools see page 531 | Mounting holes/PCB layouts see page 561

L'IMPULSION
Retrouvez nous sur
www.limpulsion.fr

Series 4.3-10 – protective caps

Protective cap for 4.3-10 female (jack) interface

- Economical design
- Snap on silicon material design



HUBER+SUHNER type	Item no.	Packaging	Notes
62_4310-0-0-1/---_-H	85092602	each	Ingress Protection IP X8

Protective cap for 4.3-10 jack

- Water protection, IP68

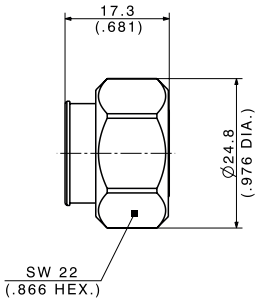

HUBER+SUHNER type	Item no.	Packaging	Notes
62_4310-0-0-X3/-33_-E	85083632	each	4.3-10 torque type

X: torque

Cable groups see page 32 | Assembly tools see page 531 | Mounting holes/PCB layouts see page 561

L'IMPULSION
Retrouvez nous sur
www.limpulsion.fr

4.3-10 Plus

Eliminating the 4.1-9.5 mating problem

- Patented solution, US 9,831,619 B2
- IEC compatible design
- Extended dielectric prevents damage from 4.1-9.5 (mini-Din) male connectors
- Antenna and filter connectors per customer requests

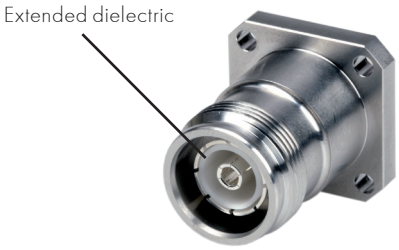

4.3-10 plus



4.3-10

Comparison between 4.3-10 plus and 4.3-10 standard interface.

HUBER+SUHNER type	Item no.	Packaging	Fig.
23_4310-U50-0-58/003_-Y	85105910	tray packaging	1

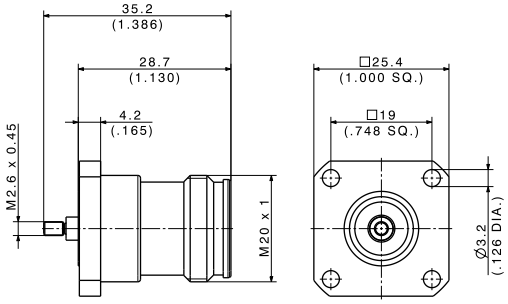

Fig. 1

Cable groups see page 32 | Assembly tools see page 531 | Mounting holes/PCB layouts see page 561

L'IMPULSION
Retrouvez nous sur
www.limpulsion.fr

Series 4.3-10 – calibration with precision adaptors (swapping method)

For return loss/VSWR measurements of 4.3-10 connectors, HUBER+SUHNER recommends the following calibration method. Depending on the 4.3-10 side (male or female) or ports on the test leads, different configurations are possible. Four different configurations with PC3.5 calibration kits or precision N calibration kits are listed below:

Configuration 1

DUT type: 4.3-10 female, test port/cable: N male
Step 1, calibrate with precision adapter

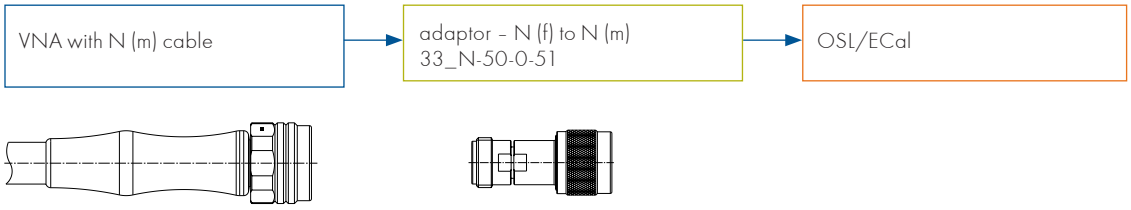

Step 2, replace the 33_N-50-0-51 adaptor with matching 4.3-10 adaptor and connect with DUT

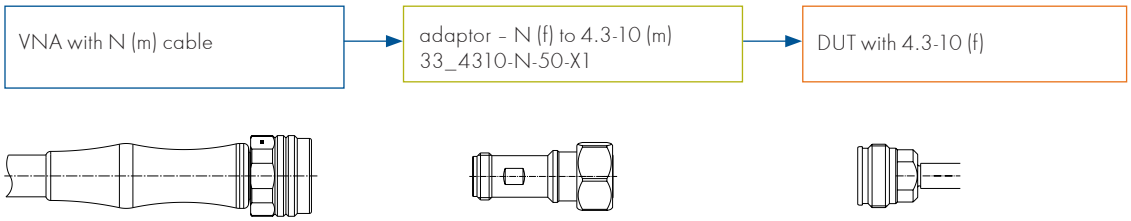

Note:
For VNA measurement cable with PC 3.5 (m) instead of N (m), replace the 33_N-50-51 adapter with matching 33_PC35-50-0-2 for calibration and 33_4310-PC35-50-X1 for measurement.

Configuration 2

DUT type: 4.3-10 male; test port/cable: N female
Step 1, calibrate with measuring adaptor

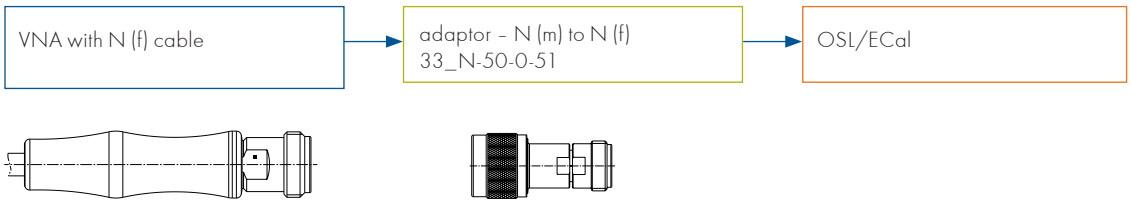

Step 2, replace the 33_N-50-0-51/193 NE adapter with matching 4.3-10 adapter and connect with DUT

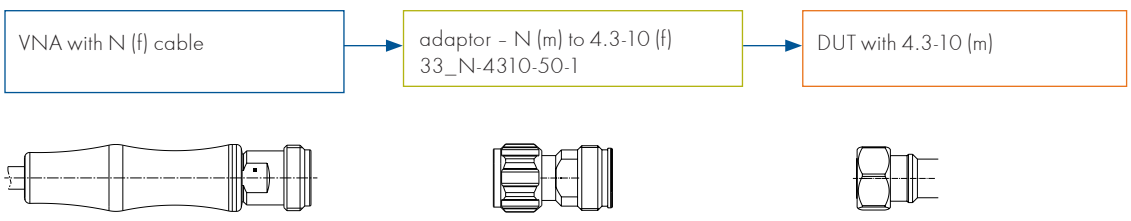

Note:
For VNA measurement cable with PC 3.5 (f) instead of N (f), replace the 33_N-50-51 adaptor with matching 33_PC35-50-0-2 for calibration and 33_PC35-4310-50-1 for measurement.

Cable groups see page 32 | Assembly tools see page 531 | Mounting holes/PCB layouts see page 561

L'IMPULSION
Retrouvez nous sur
www.limpulsion.fr

Series 7/16 – coaxial connectors

Description

HUBER+SUHNER 7/16 connectors are mechanically very rugged coaxial connectors with screw lock. They have a characteristic impedance of 50 Ω and are applicable with excellent electrical properties up to 7.5 GHz.
Transmission of medium to high power with radio transmitters and low PIM transmission of received signals such as in mobile phone base stations are typical applications.

Content

Description	409
Interface dimensions in mm/inches	409
Technical data	410
Cable connectors	431
7/16 combination system	422
Receptacles with solder end	425
Protective cap	426

Interface dimensions (mm/inches)

Plug (male)

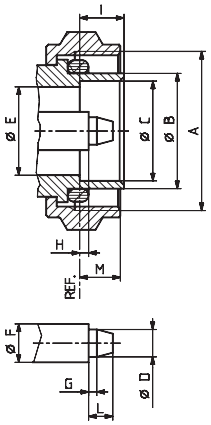

Jack (female)

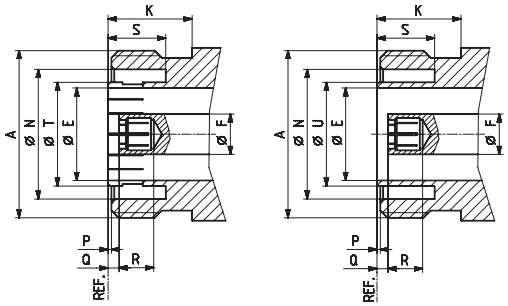

	Plug		Jack	
	min.	max.	min.	max.
A	M29 × 1.5		M29 × 1.5	
B	20.60/0.811	21.40/0.843	-	-
C	18.03/0.710	18.21/0.717	-	-
D	4.96/0.195	5.04/0.198	-	-
E	15.85/0.624	16.25/0.640	15.85/0.624	16.25/0.640
F	7.00/0.276 nom.		7.00/0.276 nom.	
G	1.40/0.055	1.60/0.063	-	-
H	1.47/0.058	1.77/0.070	-	-
I	7.00/0.276	8.00/0.315	-	-
K	-	-	10.00/0.394	-
L	-	4.50/0.177	-	-
M	7.00/0.276	9.00/0.354	-	-
N	-	-	22.10/0.870	22.90/0.902
P	-	-	0.50/0.020	0.70/0.028
Q	-	-	1.77/0.070	2.07/0.082
R	-	-	5.00/0.197	-
S	-	-	8.10/0.319	-
T	-	-	-	18.50/0.728[1)]
U	-	-	-	18.50/0.709

Interface dimensions conformable to the standards:

International	IEC 61169-4
Europe	CECC 22 190
Germany	DIN 47223

Degree of protection (interface, mated) IP68

[1)] Prior to slotting

L'IMPULSION
Retrouvez nous sur
www.limpulsion.fr

Series 7/16 – technical data

Electrical data	Requirements	
Impedance	50 Ω	
Frequency range	DC to 7.5 GHz	combination types: DC to 1 GHz
Dielectric withstanding voltage (at sea level) • Combination system	4.0 kV rms, 50 Hz 2.5 kV rms, 50 Hz	
Working voltage (at sea level) • Combination system	≤ 2.5 kV rms, 50 Hz ≤ 1.0 kV rms, 50 Hz	
Insulation resistance	≥ 10^4 MΩ	
Contact resistance • Centre contact • Outer contact	 ≤ 0.4 mΩ ≤ 1.5 mΩ	
RF-leakage (at 1 GHz)	≥ 110 dB	
VSWR	see table below	

Typical VSWR [1]	Frequency range			Cable group
Connector type	1 GHz	2.5 GHz	5 GHz	
Straight connectors	1.04	1.05	1.12	M5, M7
	1.05	1.07	1.10	U29, U32
	1.03	1.05	1.10	S39
Right angle connectors	1.04	1.05	1.12	M5; M7

Other connections and cables on request.

Performance values are typical for the connector interface. Individual component or connector performance may vary depending on the connector design, attachment (e.g. cable, PCB) or application. For detailed specifications please refer to the specific data sheets on our website www.hubersuhner.com.

[1] Values which can be achieved when connectors are perfectly fixed onto cable.

L'IMPULSION | Retrouvez nous sur www.limpulsion.fr

Series 7/16 – technical data

Admissible power of 7/16 connectors

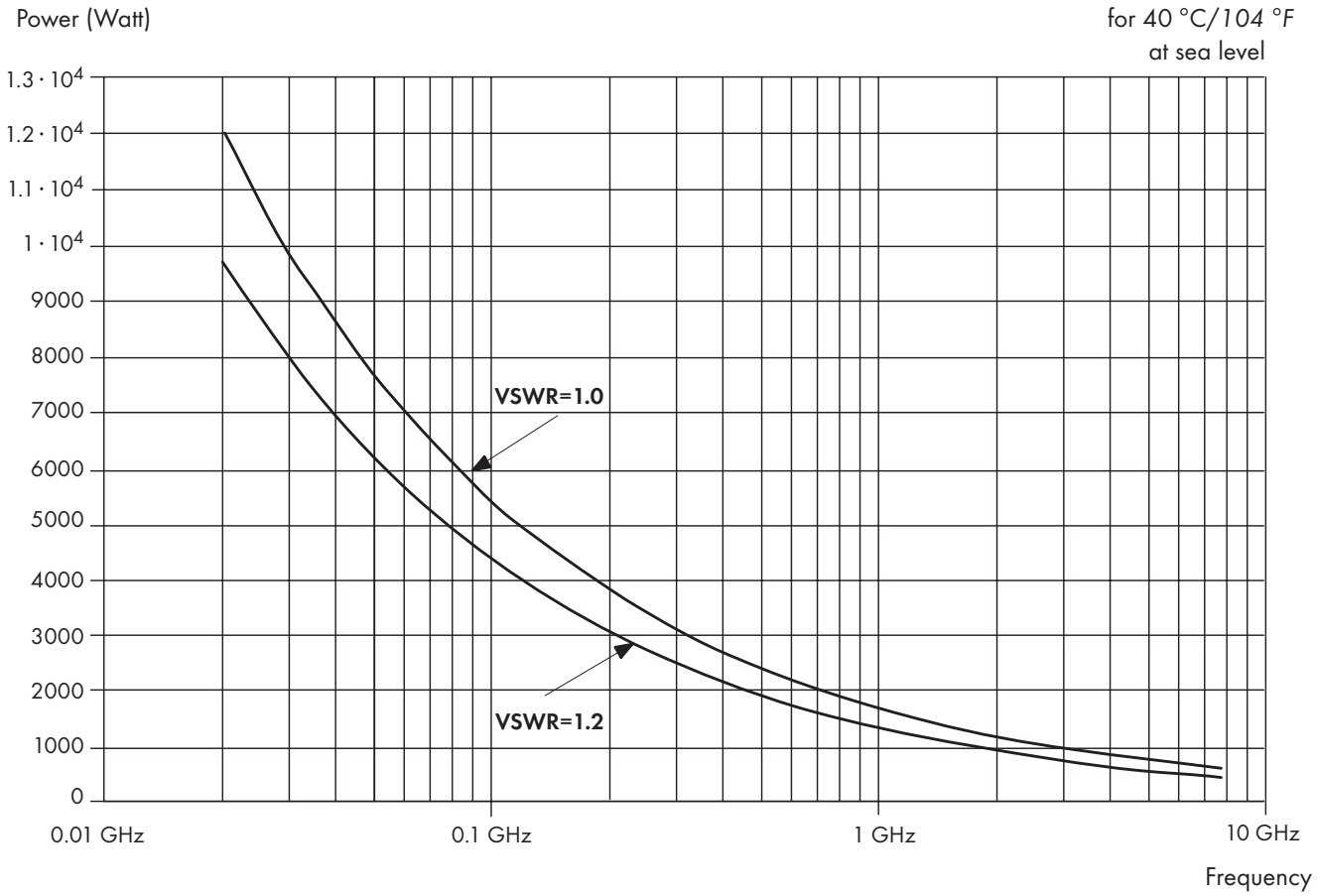

Mechanical data	Requirements
Coupling nut torque • Recommended	25 to 30 Nm/221 to 260 in lbs
Coupling nut retention force	≥ 1000 N/225.0 lbs
Contact captivation	≥ 200 N/45.0 lbs
Cable retention force [1]	see pages 32 - 41
Durability (matings)	≥ 500

Environmental data	CECC 22190 test conditions	Equivalent MIL test conditions
Temperature range		−65 to +165 °C/−85 to +329 °F
Climatic category	4.6.5 → 55/155/56	
Corrosion (mated connectors)	4.6.10 → IEC 68-2-11 Ka	saltspray test acc. to MIL-STD-202, method 101, condition B
Vibration	4.6.3 → IEC 68-2-6 Fc	

Performance values are typical for the connector interface. Individual component or connector performance may vary depending on the connector design, attachment (e.g. cable, PCB) or application. For detailed specifications please refer to the specific data sheets on our website www.hubersuhner.com.

[1] Value considers maximum load of the cables without irreversible variations of specifications.

L'IMPULSION
Retrouvez nous sur
www.limpulsion.fr

Series 7/16 – technical data

Material data		
Connector parts	Material	Plating
Bodies	brass	SUCOPLATE®
Pin contacts	brass	silver
Outer contact, jacks Socket contact	spring bronze	silver
Crimp ferrules	copper	SUCOPLATE®
Insulators, standard version	PTFE or PFA	
Gaskets	silicone rubber	

Performance values are typical for the connector interface. Individual component or connector performance may vary depending on the connector design, attachment (e.g. cable, PCB) or application. For detailed specifications please refer to the specific data sheets on our website www.hubersuhner.com.

Series 7/16 – cable connectors

Straight cable plugs (male)

For Sucoform cables

- Cable entry soldered
- Centre contact soldered

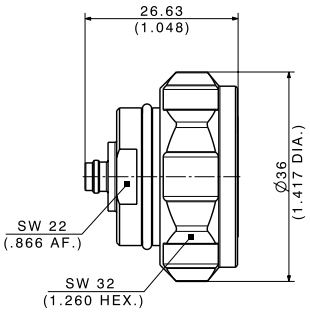

Fig. 1

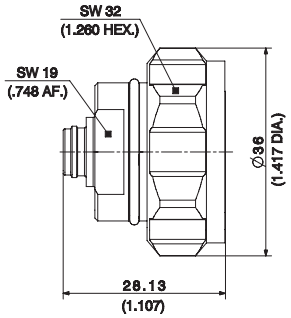

Fig. 2



HUBER+SUHNER type	Item no.	Cable group	Packaging	Assembly instruction	Weight	Fig.
11_716-50-3-3/003_-Y	23031257	Y12 (SUCOFORM_141)	bulk 30 pcs.	196279	82.8 g/2.92 oz.	1
11_716-50-5-6/003_-Y	84008435	Y14 (SUCOFORM_250-01)	bulk 10 pcs.	215393	75.0 g/2.65 oz.	2

For flexible cables

- Cable entry crimp
- Centre contact plugged-in
- Degree of protection IP67

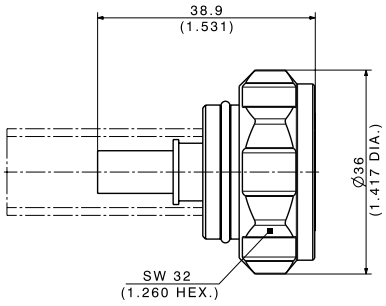



HUBER+SUHNER type	Item no.	Cable group	Packaging	Assembly instruction	Weight
11_716-50-4-5/033_-Y	84098543	X9, X28 (SX_04172_B-60, SPUMA_240, SPUMA_240-FR-01)	tray 20 pcs.	327739	74.47 g/2.62 oz.

Cable groups see page 32 | Assembly tools see page 531 | Mounting holes/PCB layouts see page 561

Series 7/16 – cable connectors

Straight cable plugs (male)

For flexible cables

- Cable entry HUBER+SUHNER pressure-sleeve
- Centre contact soldered



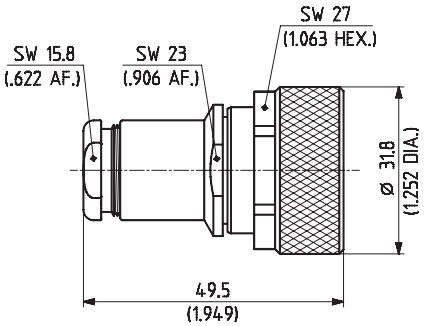

HUBER+SUHNER type	Item no.	Cable group	Packaging	Assembly instruction	Weight
11_716-50-7-3/003_-E	22544075	U29 (RG_213_/U, RADOX_RF_213)	single	9018	105.0 g/3.68 oz.
11_716-50-7-4/003_-E	22544076	U32 (RG_214_/U, ENVIROFLEX_B214)			100.0 g/3.50 oz.

For flexible cables

- HUBER+SUHNER full crimp
- Taper sleeves see page 554



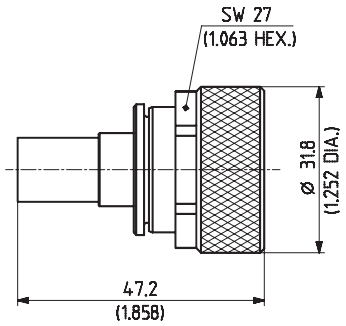

Fig. 1

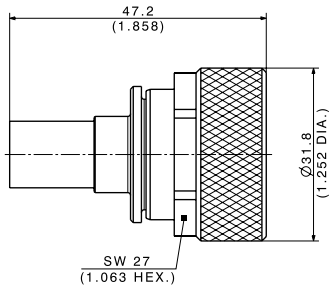

Fig. 2

HUBER+SUHNER type	Item no.	Cable group	Packaging	Assembly instruction	Crimp insert	Weight	Fig.
11_716-50-7-1/003_-E	22544073	U29 (RG_213_/U, RADOX_RF_213)	single	9017	3 D	85.0 g/2.98 oz.	1
11_716-50-7-2/003_-E	22544074	U32 (RG_214_/U, ENVIROFLEX_B214)				85.0 g/2.98 oz.	1
11_716-50-7-18/003_-E	22651493	U33 (RG_393 _/U, ENVIROFLEX_393)				87.65 g/3.09 oz.	2

Cable groups see page 32 | Assembly tools see page 531 | Mounting holes/PCB layouts see page 561

L'IMPULSION | Retrouvez nous sur www.limpulsion.fr

Series 7/16 – cable connectors

Straight cable plugs (male)

For flexible cables

- Cable entry crimp
- Centre contact plugged-in
- Degree of protection IP67

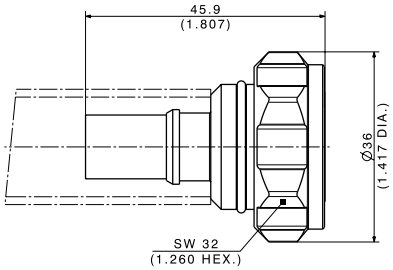



HUBER+SUHNER type	Item no.	Cable group	Packaging	Assembly instruction	Crimp insert	Weight
11_716-50-7-31/033_-Y	85010777	U30 (SPUMA_400, SPUMA_400-FR-01)	tray 10 pcs.	418807	D	89.5 g/3.16 oz.

For flexible cables

- Cable entry crimp
- Centre contact soldered

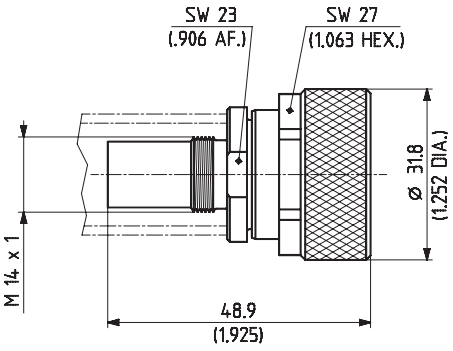



HUBER+SUHNER type	Item no.	Cable group	Packaging	Assembly instruction	Crimp insert	Weight
11_716-50-7-14/003_-E	22646908	S32 (S_07262_BD)	single	27003	D	91.0 g/3.19 oz. [1]

[1] Type available with additional sealing ferrule (IP67)

Cable groups see page 32 | Assembly tools see page 531 | Mounting holes/PCB layouts see page 561

L'IMPULSION
Retrouvez nous sur
www.limpulsion.fr

Series 7/16 – cable connectors

Straight cable plugs (male)

For flexible cables

- Cable entry crimp
- Centre contact plugged-in
- Degree of protection IP67



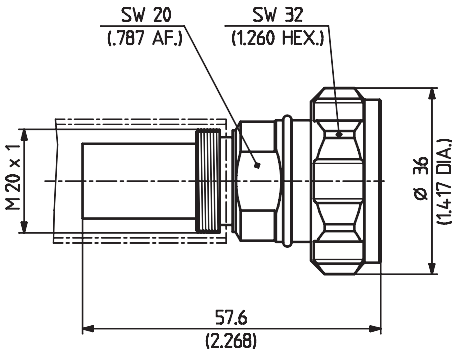

Fig. 1

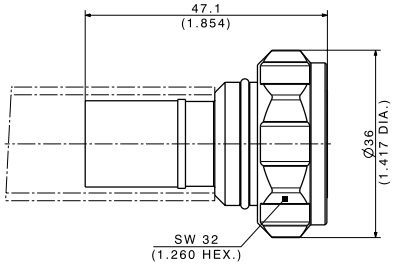

Fig. 2

HUBER+SUHNER type	Item no.	Cable group	Packaging	Assembly instruction	Crimp insert	Weight	Fig.
11_716-50-10-3/003_-Z	23002520	S39 (S_10162_B-11)	bulk 10 pcs.	27354	12.4	100.0 g/3.52 oz.	1
11_716-50-12-8/033_-Y	85018507	X29 (SPUMA_600)		444947	14.5	46.5 g/1.64 oz.	2

For corrugated cables

- Cable entry clamp
- Centre contact plugged
- Degree of protection IP68



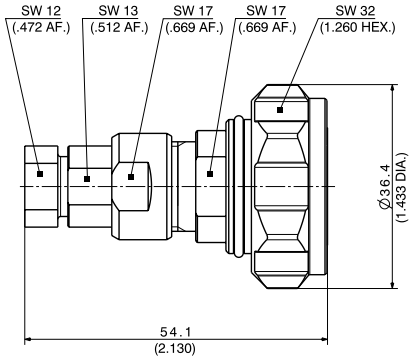

HUBER+SUHNER type	Item no.	Cable group	Packaging	Assembly instruction	Weight
11_716-50-5-7/003_-E	84064394	M5 (SUCOFEED_1/4_HF)	single	267204	145.0 g/5.12 oz.

Cable groups see page 32 | Assembly tools see page 531 | Mounting holes/PCB layouts see page 561

L'IMPULSION
Retrouvez nous sur
www.limpulsion.fr

Series 7/16 – cable connectors

Right angle cable plugs (male)

For corrugated cables
- Cable entry clamp
- Centre contact soldered
- Degree of protection IP68



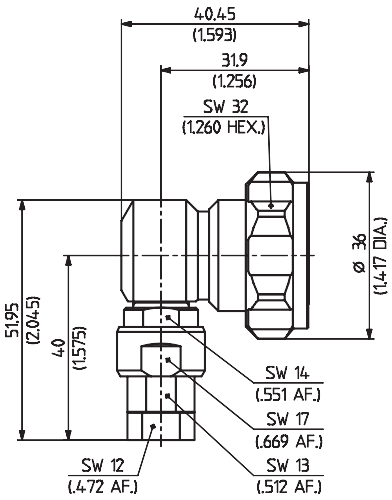

HUBER+SUHNER type	Item no.	Cable group	Packaging	Assembly instruction	Crimp insert	Weight
16_716-50-5-2/003_-Z	23016774	M5 (SUCOFEED_1/4_HF)	bulk 10 pcs.	273569	12.4	150.0 g/5.25 oz.

Cable groups see page 32 | Assembly tools see page 531 | Mounting holes/PCB layouts see page 561

L'IMPULSION
Retrouvez nous sur
www.limpulsion.fr

Series 7/16 – cable connectors

Right angle cable plugs (male)

For flexible cables

- Cable entry crimp
- Centre contact soldered

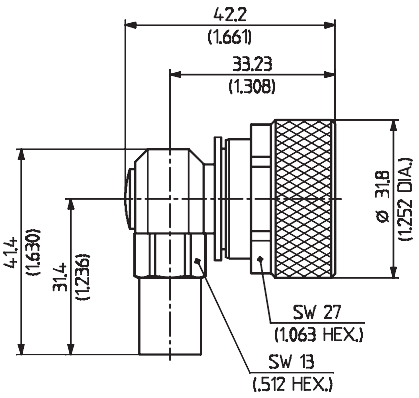

Fig. 1

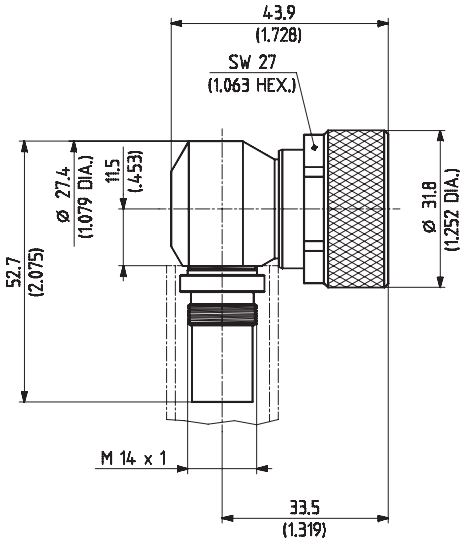

Fig. 2



HUBER+SUHNER type	Item no.	Cable group	Packaging	Assembly instruction	Crimp insert	Weight	Fig.
16_716-50-7-10/003_-E	22658839	U33 (RG_393_/U, ENVIROFLEX_393) U32 (RG_214_/U, ENVIROFLEX_B214)	single	9087	D	103.0 g/3.61 oz.	1
16_716-50-7-11/003_-E	22649421	S32 (S_07262_BD)		9094		154.0 g/5.39 oz.	2 [1]

[1] Types available with additional sealing ferrule (IP67)

Cable groups see page 32 | Assembly tools see page 531 | Mounting holes/PCB layouts see page 561

L'IMPULSION | Retrouvez nous sur www.limpulsion.fr

Series 7/16 – cable connectors

Straight cable jacks (female)

For corrugated cables
- Cable entry clamp
- Centre contact soldered
- Degree of protection IP68



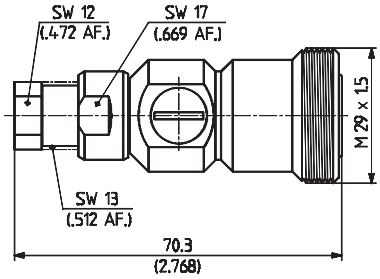

HUBER+SUHNER type	Item no.	Cable group	Packaging	Assembly instruction	Weight
21_716-50-5-400/003_-Z	23011950	M5 (SUCOFEED_1/4_HF)	bulk 10 pcs.	27297	140.0 g/4.90 oz.

For flexible cables
- HUBER+SUHNER full crimp
- Taper sleeves see page 554



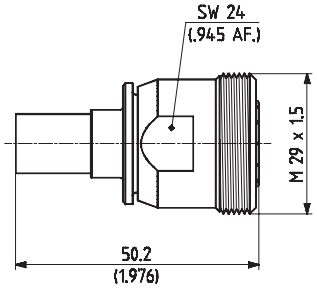

HUBER+SUHNER type	Item no.	Cable group	Packaging	Assembly instruction	Crimp insert	Weight
21_716-50-7-1/003_-E	22544092	U29 (RG_213_/U, RADOX_RF_213)	single	9017	3 D	90.0 g/3.15 oz.
21_716-50-7-2/003_-E	22544093	U32 (RG_214_/U, ENVIROFLEX_B214)				

Cable groups see page 32 | Assembly tools see page 531 | Mounting holes/PCB layouts see page 561

L'IMPULSION
Retrouvez nous sur
www.limpulsion.fr

Series 7/16 – cable connectors

Straight cable jacks (female)

For flexible cables
- Cable entry crimp
- Centre contact plugged-in
- Degree of protection IP67



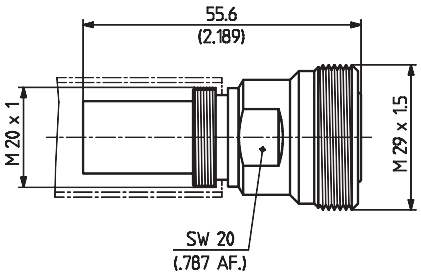

HUBER+SUHNER type	Item no.	Cable group	Packaging	Assembly instruction	Crimp insert	Weight
21_716-50-10-1/003_-Z	23002535	S39 (S_10162_B-11)	bulk 10 pcs.	27354	12.4	85.0 g/2.99 oz.

Straight bulkhead cable jacks (female)

For corrugated cables
- Cable entry clamp
- Centre contact soldered
- Degree of protection IP68



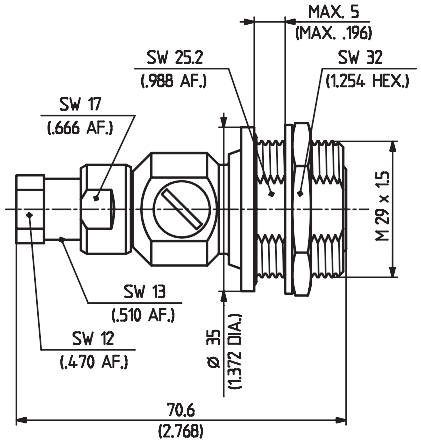

HUBER+SUHNER type	Item no.	Cable group	Packaging	Assembly instruction	Mounting hole	Weight
24_716-50-5-400/003_-Z	22658272	M5 (SUCOFEED_1/4_HF)	bulk 10 pcs.	27297	ML 110	171.0 g/6.03 oz.

Cable groups see page 32 | Assembly tools see page 531 | Mounting holes/PCB layouts see page 561

L'IMPULSION
Retrouvez nous sur
www.limpulsion.fr

Series 7/16 – cable connectors

Straight panel cable jacks (female)

For flexible cables
- Cable entry crimp
- Centre contact soldered
- Mounting hole ML 27
- Degree of protection IP66



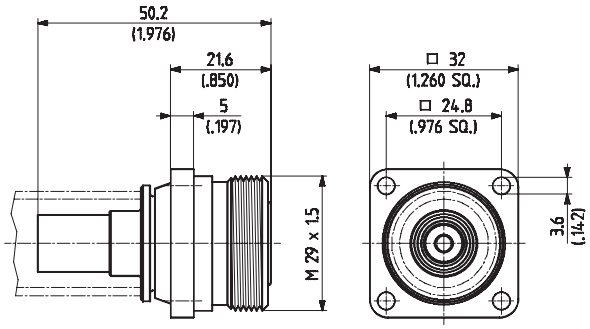

HUBER+SUHNER type	Item no.	Cable group	Packaging	Assembly instruction	Crimp insert	Weight
25_716-50-7-11/003_-E	22649423	S32 (S_07262_BD)	single	27003	D	112.0 g/3.92 oz.

Cable groups see page 32 | Assembly tools see page 531 | Mounting holes/PCB layouts see page 561

L'IMPULSION
Retrouvez nous sur
www.limpulsion.fr

Series 7/16 – combination system

The HUBER+SUHNER 7/16 combination system enables efficient, lowcost and flexible stocking of 7/16 cable connectors. The 11 basic parts can be combined to obtain 48 different cable connector types for almost all coaxial cables with 2.95 mm (0.116 in.), 4.7 mm (0.185 in.) or 7.25 mm (0.285 in.) dielectric diameter. The cable entries are available with both crimp type or pressure-sleeve (no special tools) cable attachment.
Centre conductors are soldered. All cable entries can be used together with any of the combi-heads. Taper sleeves can be supplied for the crimp type cable entries. Straight or right angle configurations are possible with the same sub-assemblies.
All types have 50 Ω impedance and are suitable for frequencies up to 1 GHz. The working voltage is limited to 1.0 kV rms.

Combi-heads

- Plug (male)

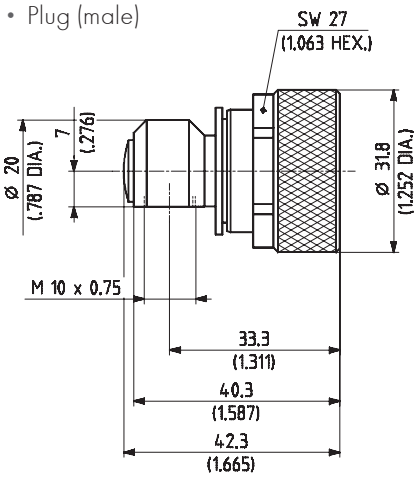



HUBER+SUHNER type	Item no.	Packaging	Weight	Notes
11_716-50-0-2/003_-E	22641432	single	100.0 g/3.50 oz.	cable entries see following pages

- Bulkhead jack (female)

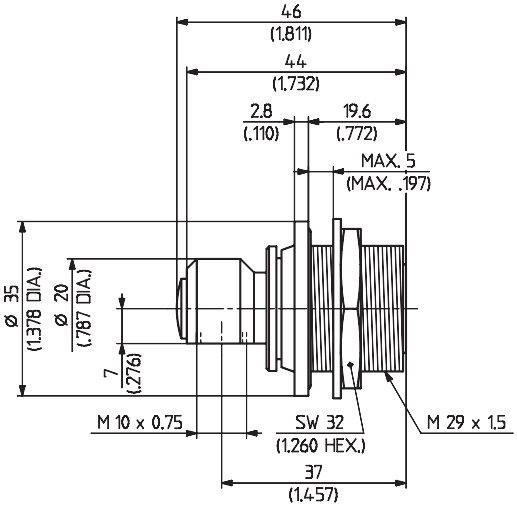



HUBER+SUHNER type	Item no.	Packaging	Mounting hole	Weight	Notes
24_716-50-0-1/003_-E	22650517	single	ML 110	126.0 g/4.44 oz.	cable entries see following pages

Cable groups see page 32 | Assembly tools see page 531 | Mounting holes/PCB layouts see page 561

Series 7/16 – combination system

Combi-heads

- Panel jack (female)



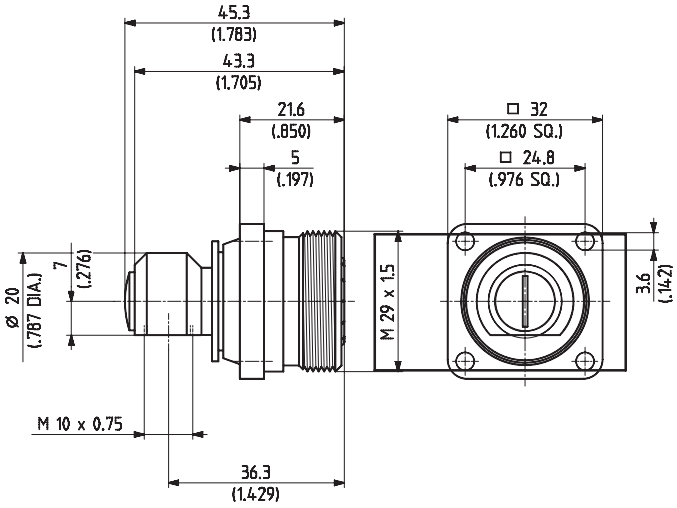

HUBER+SUHNER type	Item no.	Packaging	Mounting hole	Weight	Notes
25_716-50-0-2/003_-E	22641434	single	ML 27	124.0 g/4.34 oz.	cable entries see below

Cable entries (for use with all combi-heads)

- Cable entry crimp
- Taper sleeves see page 554

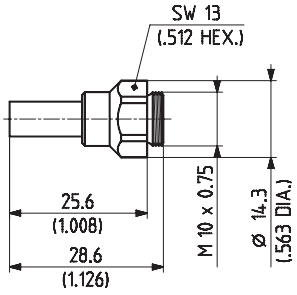

Fig. 1

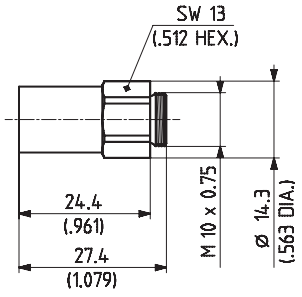

Fig. 2



HUBER+SUHNER type	Item no.	Cable group (example)	Packaging	Assembly instruction	Crimp insert	Fig.
71_Z-0-3-21/-33_-E	22641435	U7 (RG_58_C/U, ENVIROFLEX_B58)	single	9084	B	1
71_Z-0-3-22/-33_-E	22641436	U9 (RG_223_/U, ENVIROFLEX_B223)				
71_Z-0-7-21/-33_-E	22641440	U29 (RG_213_/U, RADOX_RF_213)		9087	D	2
71_Z-0-7-22/-33_-E	22641441	U32 (RG_214_/U, ENVIROFLEX_B214)				

Cable groups see page 32 | Assembly tools see page 531 | Mounting holes/PCB layouts see page 561

Series 7/16 – combination system

Cable entries (for use with all combi-heads)

- Cable entry pressure-sleeve

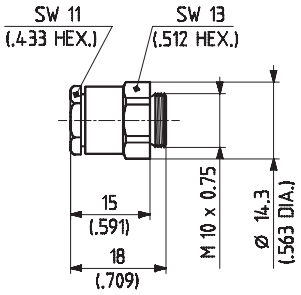

Fig. 1

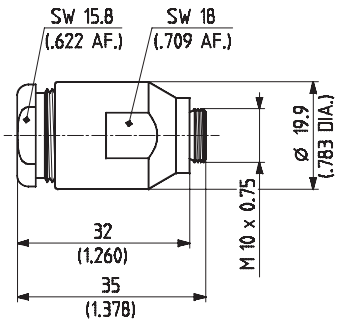

Fig. 2



HUBER+SUHNER type	Item no.	Cable group (example)	Packaging	Assembly instruction	Fig.
71_Z-0-3-24/-33_-E	22641438	U7, U9 (RG_58_C/U, ENVIROFLEX_B58)	single	9085	1
71_Z-0-7-24/-33_-E	22641443	U32 (RG_214_/U, ENVIROFLEX_B214)		9088	2

Cable groups see page 32 | Assembly tools see page 531 | Mounting holes/PCB layouts see page 561

L'IMPULSION | Retrouvez nous sur www.limpulsion.fr

Series 7/16 – receptacles with solder end

Receptacle, plug (male)

- Panel mounted
- Flange with O-ring
- Centre contact captivated for torque



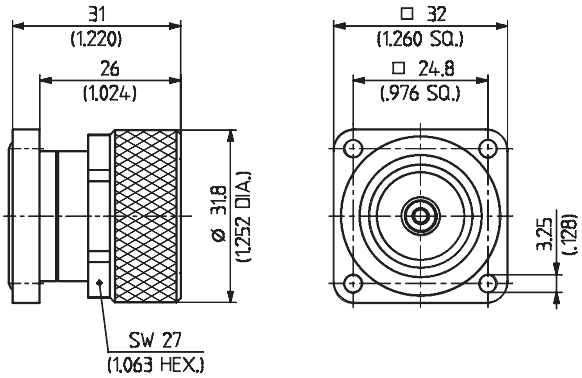

HUBER+SUHNER type	Item no.	Packaging	Weight	Notes
13_716-50-0-4/003_-V	22658959	bulk 20 pcs.	98.0 g/6.00 oz.	centre conductor with threaded stud M3

Receptacles, jacks (female)

- Panel mounted



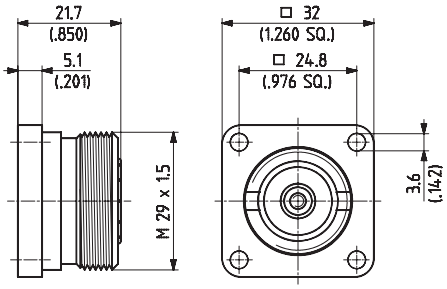

Fig. 1

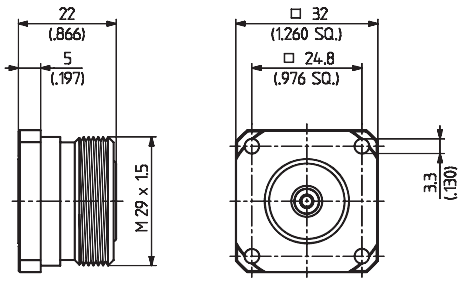

Fig. 2

HUBER+SUHNER type	Item no.	Packaging	Mounting hole	Weight	Notes	Fig.
23_716-50-0-1/003_-E	22544102	single	ML 27	75.0 g/2.65 oz.	centre conductor with threaded stud M3	1
23_716-50-0-57/003_-V	23015661	bulk 20 pcs.		80.0 g/2.80 oz.		2

Cable groups see page 32 | Assembly tools see page 531 | Mounting holes/PCB layouts see page 561

L'IMPULSION
Retrouvez nous sur
www.limpulsion.fr

Series 7/16 – protective cap

- Protective cap for jack
- Made of plastic



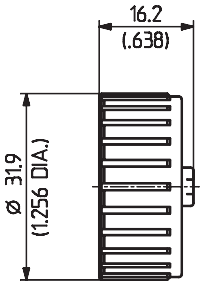

HUBER+SUHNER type	Item no.	Packaging	Notes
62_716-0-0-4/---_-H	23005877	bulk 100 pcs.	water protection according to IP68

Cable groups see page 32 | Assembly tools see page 531 | Mounting holes/PCB layouts see page 561

L'IMPULSION
Retrouvez nous sur
www.limpulsion.fr

Series Quick-Fit plus – field terminated coaxial connectors

Description

Thanks to their one-piece design, the new Quick-Fit plus connectors eliminate loose parts such as O-rings and washers. This allows extremely easy and fast assembling and removes the need for additional steps such as the application of grease on sealings. The innovative cable entry design allows the connectors to be mounted using standard wrenches, eliminating the need for expensive tools or calibrated torque wrenches.

Content

Description	427
Application	427
Key characteristics	427
Benefits	427
Technical data	428
Connector portfolio	429
Series Quick-Fit plus – MaxTool	434
Preparing tools	435
Spare parts	436

Clean cable preparing process

To achieve best performance of a field terminated connector, the cable-preparing process of a corrugated cable is as important as the use of a reliable connector system. Minor mistakes in the cable preparing can cause significant performance issues such as bad PIM or water ingress into the system. The unique all-in-one assembly tool allows the installer to prepare the cable through a fully controlled process, eliminating operator errors and resulting in perfect cable preparation with no swarf or burrs. This perfectly designed cable preparation process, along with the one-piece connector design, removes the risk of passive intermodulation caused by connectors in the overall system or network.

Key characteristics

- Extraordinary PIM stability
- Fast and easy cable preparing process
- Reliable «one click/positive stop» connector assembling
- One piece connector design
- Multi-brand cable compatibility
- High quality materials and platings

Benefits

- Very low level of interference with adjacent channels
- Stable system performance over time
- Quick and easy connector assembling
- Simplified logistics and easy on-site handling
- Wide-ranging of applications
- Reliable, also in harsh environments





L'IMPULSION
Retrouvez nous sur
www.limpulsion.fr

Series Quick-Fit plus – technical data connectors

General data	
Cable size/type	corrugated ½" annular
Interfaces	N, 4.1/9.5 [1], 4.3-10, 7/16

[1] on request

Electrical data (typical)	
Impedance	50 Ω
Frequency range	DC to 6 GHz
Return loss (gated measurement)	straight version: ≥ 30 dB up to 3.7 GHz right angle version: ≥ 28 dB up to 3.7 GHz
Passive intermodulation [2]	typical –160 dBc, minimum –155 dBc

[2] Carrier to 3rd order intermodulation product ratio with 2 x 20 W (43 dBm) carrier power

Mechanical data (typical)	
Durability	≥ 100 matings
Recommended coupling nut torque	4.3-10: ≥ 5 Nm/3.61 ft lb, IEC 61169-1

Environmental data (typical)	
Temperature range (connector only)	–55 to +85 °C/–67 to 185 °F
IP rating	IP68 (according to IEC 60529)

Material data (main parts)	Material	Plating
Cable entry	brass	SUCOPLATE®
Connector head	brass	SUCOPLATE®
Outer contact	brass	SUCOPLATE®
Centre contact	brass/CuBe	silver
Insulators	PTFE/PEI	
Gaskets	silicon	

Performance values are typical for the connector interface. Individual component or connector performance may vary depending on the connector design, attachment (e.g. cable, PCB) or application. For detailed specifications please refer to the specific data sheets on our website www.hubersuhner.com.

Cable groups see page 32 | Assembly tools see page 531 | Mounting holes/PCB layouts see page 561

L'IMPULSION
Retrouvez nous sur
www.limpulsion.fr

Series Quick-Fit plus – connector portfolio N

Cable compatibility

- Type a: HUBER+SUHNER Sucofeed_1/2, _1/2_LW, _1/2_FR, _1/2_PW
- Type b: RFS CELLFLEX LCF-50JFN, ICA12-50JPL, ICA12-50JPLW, ICA12-50JPLLW
- Type c: ANDREW/COMMSCOPE LDF4-50A
- Type d: ANDREW/COMMSCOPE HL4RPV-50
- Type e: ANDREW/COMMSCOPE AL4RPV-50

Fig. 1

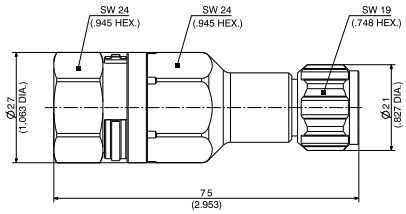

Fig. 2

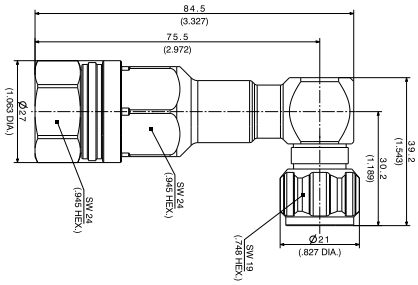

Fig. 3

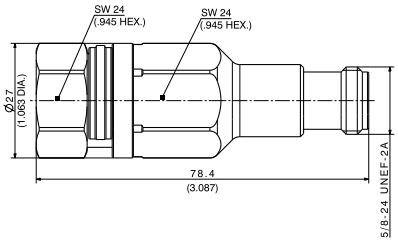

Connector style	Type description	Item number	Assembly instruction	Cable type	Blade unit for tool 74_Z-0-12-18	Fig.
N male straight	11_N-50-12-60	85074817	DOC-0000736630, DOC-0000799919	a, b, c	green, 74_Z-0-12-21, 85068959	1
N male right angle	16_N-50-12-60	85074824		a, b, c	green, 74_Z-0-12-21, 85068959	2
N female straight	21_N-50-12-60	85074835		a, b, c	green, 74_Z-0-12-21, 85068959	3
N male straight	11_N-50-12-61	85074818		d	yellow, 74_Z-0-12-20, 85069095	1
N male right angle	16_N-50-12-61	85074825		d	yellow, 74_Z-0-12-20, 85069095	2
N female straight	21_N-50-12-61	85074836		d	yellow, 74_Z-0-12-20, 85069095	3
N male right angle	11_N-50-12-62	85091142		e	green, 74_Z-0-12-21, 85068959	1
N male right angle	16_N-50-12-62	85092145		e	green, 74_Z-0-12-21, 85068959	2
N female straight	21_N-50-12-62	85092237		e	green, 74_Z-0-12-21, 85068959	3

Cable groups see page 32 | Assembly tools see page 531 | Mounting holes/PCB layouts see page 561

L'IMPULSION
Retrouvez nous sur
www.limpulsion.fr

Series Quick-Fit plus – connector portfolio 4.3-10 screw

Cable compatibility

- Type a: HUBER+SUHNER Sucofeed_1/2, _1/2_LW, _1/2_FR, _1/2_PW
- Type b: RFS CELLFLEX LCF-50JFN, ICA12-50JPL, ICA12-50JPLW, ICA12-50JPLLW
- Type c: ANDREW/COMMSCOPE LDF4-50A
- Type d: ANDREW/COMMSCOPE HL4RPV-50
- Type e: ANDREW/COMMSCOPE AL4RPV-50

Fig 1.

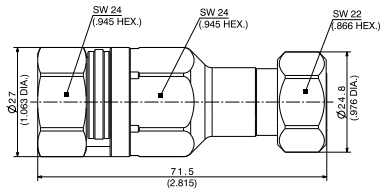

Fig 2.

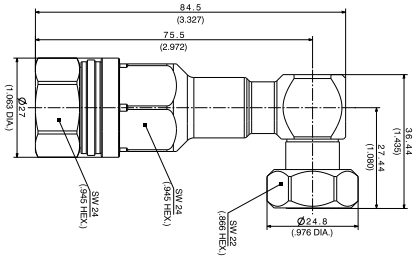

Fig. 3

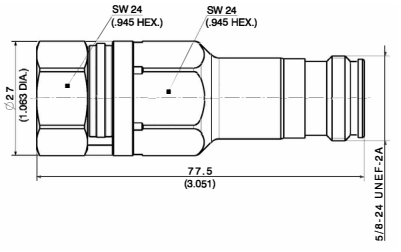

Connector style	Type description	Item number	Assembly instruction	Cable type	Blade unit for tool 74_Z-0-12-18	Fig.
4.3-10 male straight	11_4310-50-12-X60	85067026	DOC-0000736630, DOC-0000799919	a, b, c	green, 74_Z-0-12-21, 85068959	1
4.3-10 male right angle	16_4310-50-12-X60	85067267		a, b, c	green, 74_Z-0-12-21, 85068959	2
4.3-10 female straight	21_4310-50-12-60	85067226 (fits all locking mechanisms)		a, b, c	green, 74_Z-0-12-21, 85068959	3
4.3-10 male straight	11_4310-50-12-X61	85067072		d	yellow, 74_Z-0-12-20, 85069095	1
4.3-10 male right angle	16_4310-50-12-X61	85067268		d	yellow, 74_Z-0-12-20, 85069095	2
4.3-10 female straight	21_4310-50-12-61	85067228 (fits all locking mechanisms)		d	yellow, 74_Z-0-12-20, 85069095	3
4.3-10 male straight	11_4310-50-12-X62	85086308		e	green, 74_Z-0-12-21, 85068959	1
4.3-10 male right angle	16_4310-50-12-X62	85092655		e	green, 74_Z-0-12-21, 85068959	2
4.3-10 female straight	21_4310-50-12-62	85092653		e	green, 74_Z-0-12-21, 85068959	3

Cable groups see page 32 | Assembly tools see page 531 | Mounting holes/PCB layouts see page 561

L'IMPULSION
Retrouvez nous sur
www.limpulsion.fr

Series Quick-Fit plus – connector portfolio 4.3-10 hand screw

Cable compatibility

- Type a: HUBER+SUHNER Sucofeed_1/2, _1/2_LW, _1/2_FR, _1/2_PW
- Type b: RFS CELLFLEX LCF-50JFN, ICA12-50JPL, ICA12-50JPLW, ICA12-50JPLLW
- Type c: ANDREW/COMMSCOPE LDF4-50A
- Type d: ANDREW/COMMSCOPE HL4RPV-50

Fig 1.

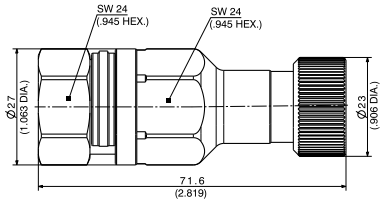

Fig 2.

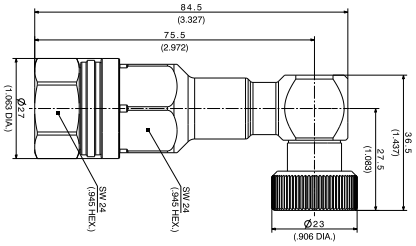

Fig. 3

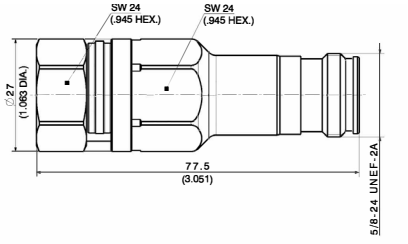

Connector style	Type description	Item number	Assembly instruction	Cable type	Blade unit for tool 74_Z-0-12-18	Fig.
4.3-10 male straight	11_4310-50-12-Y60	85074839	DOC-0000736630, DOC-0000799919	a, b, c	green, 74_Z-0-12-21, 85068959	1
4.3-10 male right angle	16_4310-50-12-Y60	85074841		a, b, c	green, 74_Z-0-12-21, 85068959	2
4.3-10 female straight	21_4310-50-12-60	85067226 (fits all locking mechanisms)		a, b, c	green, 74_Z-0-12-21, 85068959	3
4.3-10 male straight	11_4310-50-12-Y61	85074840		d	yellow, 74_Z-0-12-20, 85069095	1
44.3-10 male right angle	16_4310-50-12-Y61	85074842		d	yellow, 74_Z-0-12-20, 85069095	2
4.3-10 female straight	21_4310-50-12-61	85067228 (fits all locking mechanisms)		d	yellow, 74_Z-0-12-20, 85069095	3

Cable groups see page 32 | Assembly tools see page 531 | Mounting holes/PCB layouts see page 561

L'IMPULSION
Retrouvez nous sur
www.limpulsion.fr

Series Quick-Fit plus – connector portfolio 4.3-10 push-pull

Cable compatibility

- Type a: HUBER+SUHNER Sucofeed_1/2, _1/2_LW, _1/2_FR, _1/2_PW
- Type b: RFS CELLFLEX LCF-50JFN, ICA12-50JPL, ICA12-50JPLW, ICA12-50JPLLW
- Type c: ANDREW/COMMSCOPE LDF4-50A
- Type d: ANDREW/COMMSCOPE HL4RPV-50

Fig 1.

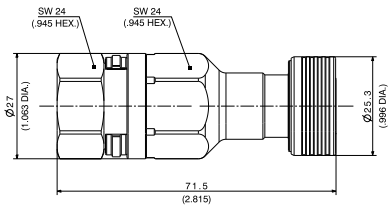

Fig 2.

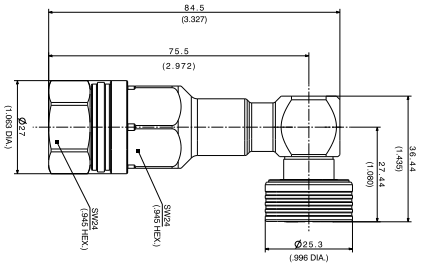

Fig. 3

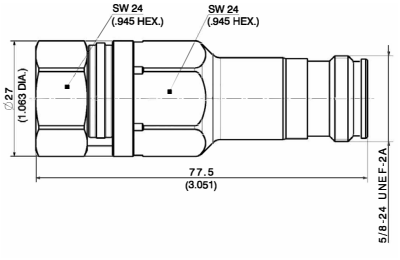

Connector style	Type description	Item number	Assembly instruction	Cable type	Blade unit for tool 74_Z-0-12-18	Fig.
4.3-10 male straight	11_4310-50-12-Z60	85074828	DOC-0000736630, DOC-0000799919	a, b, c	green, 74_Z-0-12-21, 85068959	1
4.3-10 male right angle	16_4310-50-12-Z60	85074830		a, b, c	green, 74_Z-0-12-21, 85068959	2
4.3-10 female straight	21_4310-50-12-60	85067226 (fits all locking mechanisms)		a, b, c	green, 74_Z-0-12-21, 85068959	3
4.3-10 male straight	11_4310-50-12-Z61	85074829		d	yellow, 74_Z-0-12-20, 85069095	1
44.3-10 male right angle	16_4310-50-12-Z61	85074831		d	yellow, 74_Z-0-12-20, 85069095	2
4.3-10 female straight	21_4310-50-12-61	85067228 (fits all locking mechanisms)		c	yellow, 74_Z-0-12-20, 85069095	3

Cable groups see page 32 | Assembly tools see page 531 | Mounting holes/PCB layouts see page 561

L'IMPULSION
Retrouvez nous sur
www.limpulsion.fr

Series Quick-Fit plus – connector portfolio 7/16

Cable compatibility

- Type a: HUBER+SUHNER Sucofeed_1/2, _1/2_LW, _1/2_FR, _1/2_PW
- Type b: RFS CELLFLEX LCF-50JFN, ICA12-50JPL, ICA12-50JPLW, ICA12-50JPLLW
- Type c: ANDREW/COMMSCOPE LDF4-50A
- Type d: ANDREW/COMMSCOPE HL4RPV-50
- Type e: ANDREW/COMMSCOPE AL4RPV-50

Fig. 1

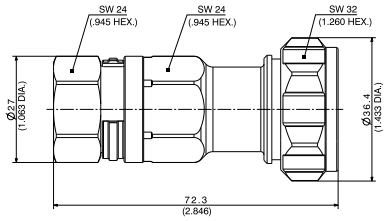

Fig. 2

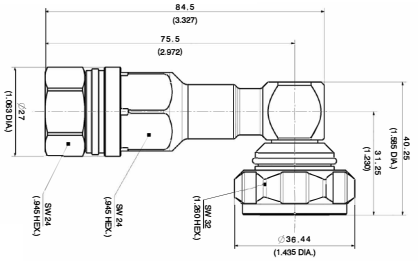

Fig. 3

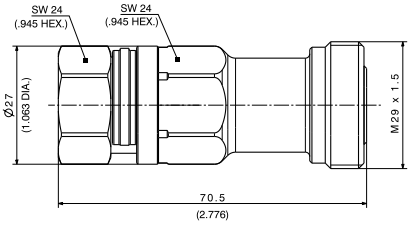

Connector style	Type description	Item number	Assembly instruction	Cable type	Blade unit for tool 74_Z-0-12-18	Fig.
7/16 male straight	11_716-50-12-60	85074815	DOC-0000736630, DOC-0000799919	a, b, c	green, 74_Z-0-12-21, 85068959	1
7/16 male right angle	16_716-50-12-60	85074821		a, b, c	green, 74_Z-0-12-21, 85068959	2
7/16 female straight	21_716-50-12-60	85074832		a, b, c	green, 74_Z-0-12-21, 85068959	3
7/16 male straight	11_716-50-12-61	85074816		d	yellow, 74_Z-0-12-20, 85069095	1
7/16 male right angle	16_716-50-12-61	85074822		d	yellow, 74_Z-0-12-20, 85069095	2
7/16 female straight	21_716-50-12-61	85074833		d	yellow, 74_Z-0-12-20, 85069095	3
7/16 male straight	11_716-50-12-62	85092479		e	green, 74_Z-0-12-21, 85068959	1
7/16 male right angle	16_716-50-12-62	85092520		e	green, 74_Z-0-12-21, 85068959	2
7/16 female straight	21_716-50-12-62	85092603		e	green, 74_Z-0-12-21, 85068959	3

Cable groups see page 32 | Assembly tools see page 531 | Mounting holes/PCB layouts see page 561

L'IMPULSION
Retrouvez nous sur
www.limpulsion.fr

Series Quick-Fit plus – MaxTool

All-in-one cable preparing tool

- Fully controlled/zero defect cable preparing
- Perfect cutting process – no swarf – no PIM
- Easy-to-handle – easy-to-carry
- Ergonomic design
- Semi-automated and manual operation



Overview

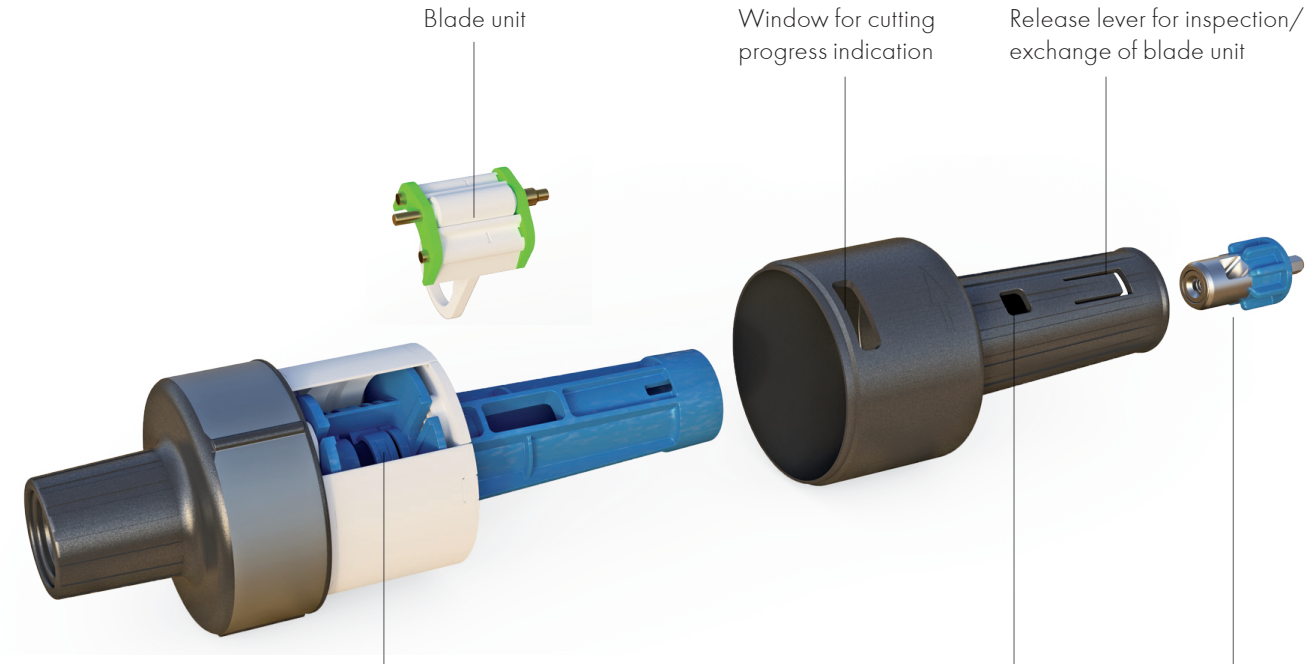

Cable groups see page 32 | Assembly tools see page 531 | Mounting holes/PCB layouts see page 561

L'IMPULSION
Retrouvez nous sur
www.limpulsion.fr

Series Quick-Fit plus – preparing tools

Fig 1.



Fig. 2



Tools	Content	Type description	Item number	Instructions	Fig.
Starter kit	Cable preparing tool Drill bit/sharpener Blade unit (gn, yl) Jacket/diel. removers Fixed wrenches Screw driver Holster	74_Z-0-12-19	85069097	DOC-0000736630, DOC-0000799919, DOC-0000721673	1
Preparing tool	Cable preparing tool Drill bit/sharpener Blade unit (gn, yl) Jacket/diel. removers	74_Z-0-12-18	85066880		2

Cable groups see page 32 | Assembly tools see page 531 | Mounting holes/PCB layouts see page 561

L'IMPULSION
Retrouvez nous sur
www.limpulsion.fr

Series Quick-Fit plus – spare parts

Fig 1.



Fig 2.



Fig. 3



Fig. 4



Fig. 5

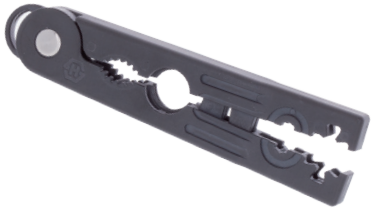

Fig. 6



Tools	Note	Cable compatibility	Type description	Item number	Instructions	Fig.
Box including blade unit green and remover	2 blade units and 2 removers per box	View Page 7, 8, 9, 10, 11,12	74_Z-0-12-21	85068959	DOC-0000736630, DOC-0000799919, DOC-0000721673	1
Box including blade unit yellow and remover	2 blade units and 2 removers per box	ANDREW/ COMMSCOPE HL4RPV-50	74_Z-0-12-20	85069095		2
Drill bit/centre conductor sharpener	1 pce per packet	n/a	74_Z-0-12-23	85069100		3
Jacket/dielectric remover (plenum cables only)	5 pcs per packet	n/a	74_Z-0-12-22	85069099		4
Jacket/dielectric remover "nutcracker"	3 pcs per packet	n/a	74_Z-0-12-24	85089069		5
Holster including belt	without content	n/a	74_Z-0-0-637	85069101		6

Cable groups see page 32 Assembly tools see page 531 Mounting holes/PCB layouts see page 561

L'IMPULSION | Retrouvez nous sur www.limpulsion.fr

Series Quick-Fit – field terminated coaxial connectors

General description

HUBER+SUHNER Quick-Fit connectors are worldwide approved N, 4.3-10 and 7/16 connectors for foam dielectric corrugated copper tube cables. They offer a greatly simplified and economic approach to cable preparation and assembly. The product line meets the requirements of multi-carrier, high-channel-count transceivers such as base stations of today's mobile communication infrastructure networks.

Content

Description	437
Application	437
Features	437
Benefits	437
Technical data	438
Cable connectors - preparing tools	439
Cold shrink tubes for additional protection	447

Application

- Rugged connectors for easy outdoor and indoor (DAS) termination of corrugated feeder and jumper cables
- Meeting also the special requirements of BTS and small cell applications

Features

- Excellent RF performance
- Low, stable and reproducible PIM (Passive Intermodulation Product), typically –165 dBc
- Safe assembly process, in-field termination with reproducible electrical performance
- Quick and easy assembly, 2 main connector parts, 4 steps in less than 4 minutes
- High IP rating, IP68
- Multi-brand, multi-design and multi-material cable compatibility
- Backward compatibility
- Reusability

Benefits

- Easy field installation
- Time saving
- Simplified logistics
- Low cost of ownership
- Support quality of a proven connector house
- Compatible for copper and aluminium cables



L'IMPULSION
Retrouvez nous sur
www.limpulsion.fr

Series Quick-Fit – technical data

General data	
Cable size/type	corrugated 1/2" annular, 1/2" helical, 7/8" annular, 1 1/4" annular, 1 5/8" annular
Interfaces	N, 4.3-10, 7/16

Electrical data (typical)	
Impedance	50 Ω
Frequency range (interface only)	N: DC to 11 GHz 4.3-10: DC to 12 GHz 7/16: DC to 7.5 GHz
Passive intermodulation [1]	better than –155 dBc

[1] Carrier to 3rd order intermodulation product ratio with 2 × 20 W (43 dBm) carrier power

Mechanical data (typical)	
Durability	≥ 100 matings
Recommended coupling nut torque	N: 0.68 to 1.13 Nm/0.49 to 0.82 ft lb, IEC 61169-16 4.3-10: ≥ 5 Nm/3.61 ft lb, IEC 61169-1 7/16: 25 to 30 Nm/18.05 to 21.66 ft lb, IEC 61169-4

Environmental data (typical)	
Temperature range (connector only)	–40 to +85 °C/–40 to +185 °F
IP rating	IP68 (according to IEC 60529)

Material data (main parts)	Material	Plating
Cable entry	brass	SUCOPLATE®
Connector head	brass	SUCOPLATE®
Outer contact	brass	SUCOPLATE®
Centre contact	spring bronze/brass	silver
Insulators	PTFE or PFA	
Gaskets	rubber	

Performance values are typical for the connector interface. Individual component or connector performance may vary depending on the connector design, attachment (e.g. cable, PCB) or application. For detailed specifications please refer to the specific data sheets on our website www.hubersuhner.com.

L'IMPULSION | Retrouvez nous sur www.limpulsion.fr

Series Quick-Fit – connector portfolio

For cable size 1/2"_HF; 1/2"_HF_FR and 1/2"_HF_FR_UL

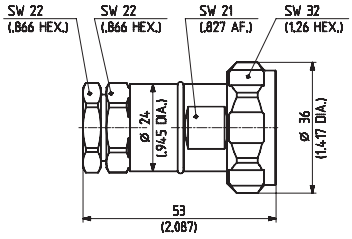

Fig. 1

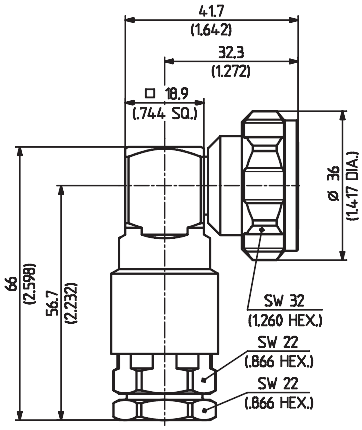

Fig. 2



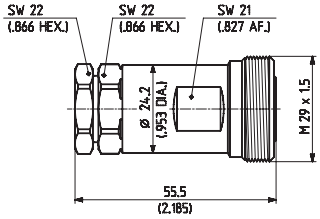

Fig. 3

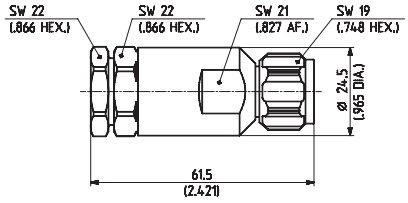

Fig. 4

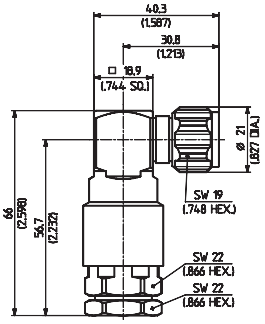

Fig. 5

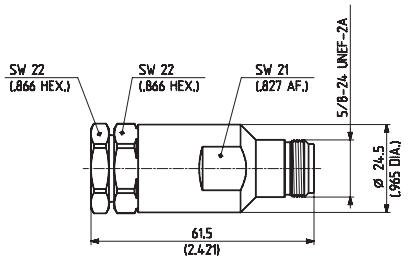

Fig. 6

Type no.	Connector style	Item no.	Assembly instruction	Fig.
11_716-50-9-9	DIN 7/16 male	22660309	DOC-0000179418	1
16_716-50-9-5	DIN 7/16 male right angle	23007298		2
21_716-50-9-9	DIN 7/16 female	22660310		3
11_N-50-9-9	N male	22660311		4
16_N-50-9-6	N male right angle	23007299		5
21_N-50-9-9	N female	22660312		6

Cable compatibility list on request

Cable groups see page 32 | Assembly tools see page 531 | Mounting holes/PCB layouts see page 561

L'IMPULSION
Retrouvez nous sur
www.limpulsion.fr

Series Quick-Fit – preparing tools

For cable size 1/2"_HF; 1/2"_HF_FR and 1/2"_HF_FR_UL



Fig. 1



Fig. 2

Tools	Type description	Item number	Fig.
Stripping tool	74_Z-0-9-15	23001006	1
Stripping tool, guillotine	74_Z-0-9-100	85073086	2
Blade jacket for 74_Z-0-9-15	74_Z-0-0-346	23000936	
Triangle knife for 74_Z-0-9-15	74_Z-0-0-348	23000938	
Blade copper tube for 74_Z-0-9-15	74_Z-0-0-349	23001008	

Cable groups see page 32 | Assembly tools see page 531 | Mounting holes/PCB layouts see page 561

Series Quick-Fit – connector portfolio

For cable size 1/2"; 1/2"_FR and 1/2"_FR_UL



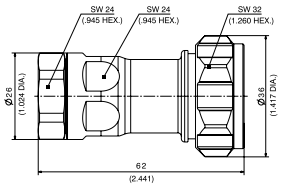

Fig. 1

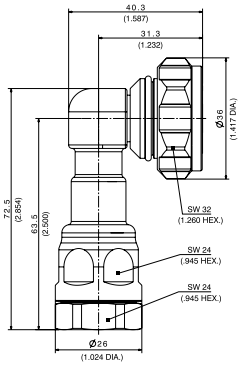

Fig. 2

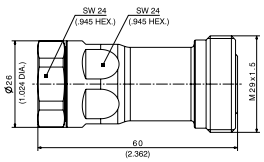

Fig. 3

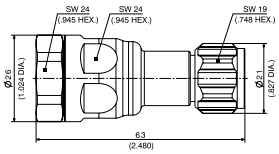

Fig. 4

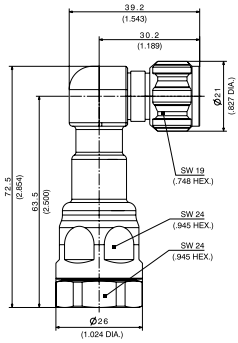

Fig. 5

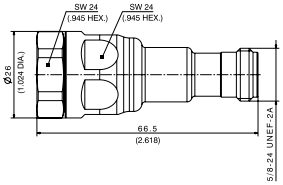

Fig. 6

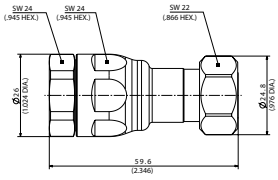

Fig. 7

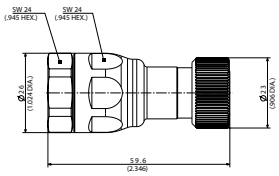

Fig. 8

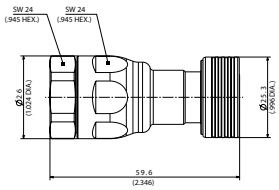

Fig. 9

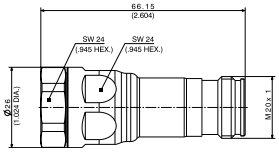

Fig. 10

Type no.	Connector style	Item no.	Assembly instruction	Fig.
11_716-50-12-50/033_-E	DIN 7/16 male	84201175	DOC-0000386367	1
16_716-50-12-50/033_-E	DIN 7/16 male right angle	84201179		2
21_716-50-12-50/033_-E	DIN 7/16 female	84201177		3
11_N-50-12-50/033_-E	N male	84201169		4
16_N-50-12-50/033_-E	N male right angle	84201181		5
21_N-50-12-50/033_-E	N female	84201173		6
11_4310-50-12-X2/003_-E	4.3-10 male, screw	85020537		7
11_4310-50-12-Y2/003_-E	4.3-10 male, hand screw	85021551		8
11_4310-50-12-Z2/003_-E	4.3-10 male, quick-lock	85021552		9
21_4310-50-12-1/033_-E	4.3-10 female	85029736		10

Cable compatibility list on request.

Cable groups see page 32 | Assembly tools see page 531 | Mounting holes/PCB layouts see page 561

L'IMPULSION
Retrouvez nous sur
www.limpulsion.fr

Series Quick-Fit – preparing tools

For cable size 1/2", 1/2"_FR and 1/2"_FR_UL



Fig. 1



Fig. 2

Tools	Type description	Item number	Fig.
Stripping tool	74_Z-0-12-25	85091563	1
Flaring tool	74_Z-0-12-8	85006446	2
Blade jacket for 74_Z-0-12-25	74_Z-0-0-346	23000936	
Triangle knife for 74_Z-0-12-25	74_Z-0-0-348	23000938	
Blade copper tube for 74_Z-0-12-25	74_Z-0-0-655	85093583	

Cable groups see page 32 | Assembly tools see page 531 | Mounting holes/PCB layouts see page 561

L'IMPULSION
Retrouvez nous sur
www.limpulsion.fr

Series Quick-Fit – connector portfolio

For cable size 7/8"; 7/8"_FR; 7/8"_LA; 7/8"_LA_FR and 7/8"_HF



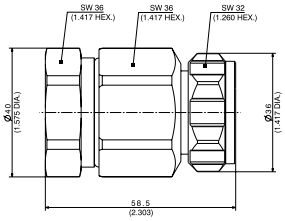

Fig. 1

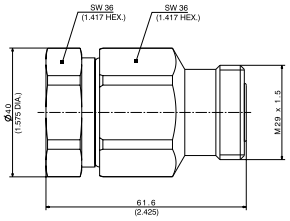

Fig. 2

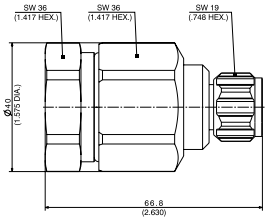

Fig. 3

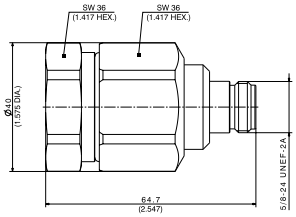

Fig. 4

Type no.	Connector style	Item no.	Assembly instruction	Fig.
11_716-50-23-44	DIN 7/16 male	84069135	DOC-0000295365	1
21_716-50-23-44	DIN 7/16 female	84069194		2
11_N-50-23-43	N male	84124063		3
21_N-50-23-43	N female	84124062		4

Cable compatibility list on request

Cable groups see page 32 | Assembly tools see page 531 | Mounting holes/PCB layouts see page 561

L'IMPULSION
Retrouvez nous sur
www.limpulsion.fr

Series Quick-Fit – preparing tools

For cable size 7/8"; 7/8"_FR; 7/8"_LA; 7/8"_LA_FR and 7/8"_HF



Fig. 1



Fig. 2



Fig. 3

Tools	Type description	Item number	Fig.
Stripping tool (STD, FR, HF)	74_Z-0-23-21	85002265	1
Stripping tool (LA, LA_FR)	74_Z-0-23-22	84147229	2
Stripping tool, guillotine, all cable types	74_Z-0-23-100	84133924	3
Blade copper tube, dielectric, centre conductor for 74_Z-0-23-21/22	74_Z-0-0-297	22650531	
Blade jacket for 74_Z-0-23-21/22	74_Z-0-0-355	23008264	
Counter sink	74_Z-0-0-415	22652206	

Cable groups see page 32 | Assembly tools see page 531 | Mounting holes/PCB layouts see page 561

L'IMPULSION
Retrouvez nous sur
www.limpulsion.fr

Series Quick-Fit – connector portfolio

For cable size 1_1/4" and 1_1/4"_FR

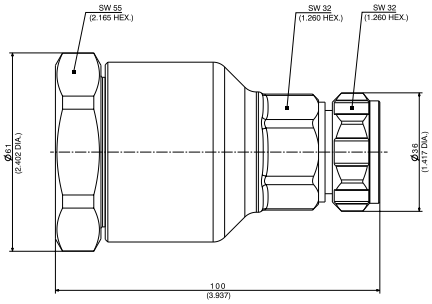

Fig. 1

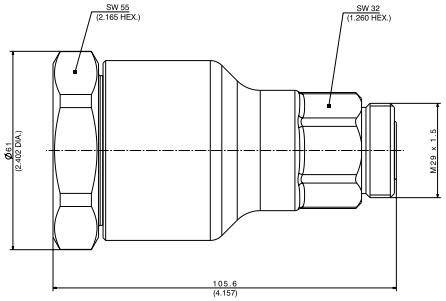

Fig. 2



Type no.	Connector style	Item no.	Assembly instruction	Fig.
11_716-50-32-4	DIN 7/16 male	84116088	DOC-0000341341	1
21_716-50-32-4	DIN 7/16 female	84116150		2

Cable compatibility list on request

For cable size 1_5/8" and 1_5/8"_LA

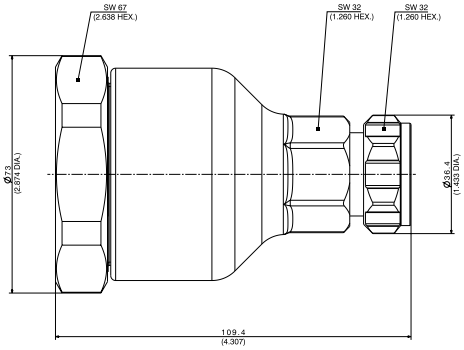

Fig. 1

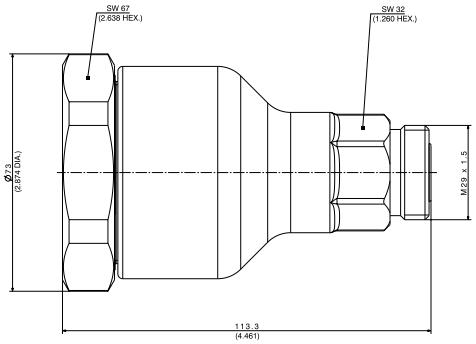

Fig. 2



Type no.	Connector style	Item no.	Assembly instruction	Fig.
11_716-50-42-4	DIN 7/16 male	84079343	DOC-0000299051	1
21_716-50-42-4	DIN 7/16 female	84079305		2

Cable compatibility list on request

Cable groups see page 32 | Assembly tools see page 531 | Mounting holes/PCB layouts see page 561

L'IMPULSION
Retrouvez nous sur
www.limpulsion.fr

Series Quick-Fit – preparing tools

For cable size 1 ¼" and 1 ¼"_FR



Fig. 1



Fig. 2

Tools	Type description	Item number	Fig.
Stripping tool (jacket only!)	74_Z-0-32-14	23010533	1
Flaring tool	74_Z-0-32-15	84120843	2
Blade jacket for 74_Z-0-32-14	74_Z-0-0-355	23008264	

For cable size 1 5/8" and 1 5/8"_LA



Fig. 1



Fig. 2

Tools	Type description	Item number	Fig.
Stripping tool (jacket only!)	74_Z-0-42-14	23010534	1
Flaring tool	74_Z-0-42-15	84085074	2
Blade jacket for 74_Z-0-42-14	74_Z-0-0-356	23010537	

Cable groups see page 32 | Assembly tools see page 531 | Mounting holes/PCB layouts see page 561

L'IMPULSION | Retrouvez nous sur www.limpulsion.fr

Series Quick-Fit – cold shrink tubes for additional protection

This special cold shrink tube reliably protects coaxial connectors against humidity and harsh environmental influences like icy conditions or a polluted atmosphere. It especially supports outdoor feeder line installations in mobile communications and other wireless systems.

The simple and fast assembly of this cold shrink tube, by pulling out the supporting spiral, enables a reliable installation without special tools. After the assembly the cold shrink tube provides reliable protection by its continuous radial contact pressure.

Features

- Quick and easy installation without tool
- No torches or heat required
- Accommodates a wide range of cable sizes
- Good thermal stability
- Resists acids and bases, ozone and UV radiation
- Water resistant
- Application temperature (shrinking process) –20 °C/+50 °C
- Working temperature –20 °C/+130 °C

Type no.	Item no.	For connector pair
73_Z-0-0-678/---_-E Material: silicone	84062968	1/2" HF - 1/2" HF 1/2" HF - 1/2" 1/2" HF - 7/8" 1/2" - 1/2" 1/2" - 7/8" 7/8" - 7/8"
73_Z-0-0-339/---_-E Material: EPDM [1]	22658885	1/2" HF - 1 1/4" 1/2" HF - 1 5/8" 1/2" - 1 1/4" 1/2" - 1 5/8" 7/8" - 1 1/4" 7/8" - 1 5/8"



[1] At temperatures below 0 °C shrinking process can be supported by hand warmth.

Cable groups see page 32 | Assembly tools see page 531 | Mounting holes/PCB layouts see page 561

L'IMPULSION
Retrouvez nous sur
www.limpulsion.fr

L'IMPULSION | Retrouvez nous sur www.limpulsion.fr

Reverse polarity connectors

Description

According UL FCC (part 15.203) regulations, wireless radio equipment with removable antenna must not have a standardised interface. This to avoid the connection of antenna equipment which is not WLAN approved.

An established solution are the so called reverse polarity connectors. That means, the male connector is fitted with female centre contact and insulator, whereas the female side is fitted with male centre contact and insulator. For identification of reverse connectors the letter R (for reverse) is used in the type description. Example: 11_TNC-R50-3-42.

Content

Description	449
Reverse polarity connectors TNC	450
Reverse polarity connectors SMA	452
Reverse polarity connectors – adaptors	456



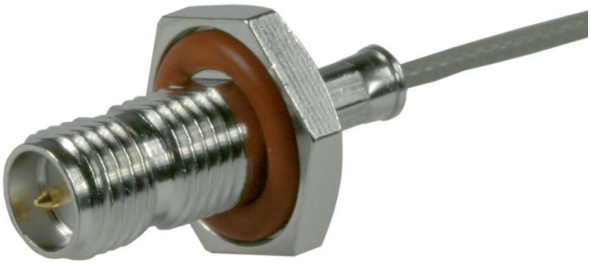

Reverse polarity connectors TNC

Straight cable plugs (reverse)

For flexible cables
- Cable attachment: HUBER+SUHNER full crimp



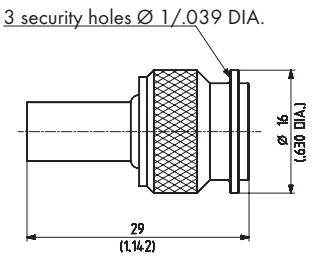

Fig. 1

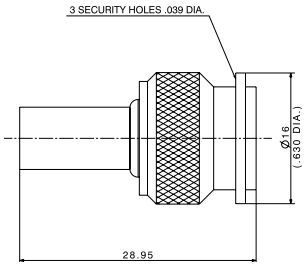

Fig. 2

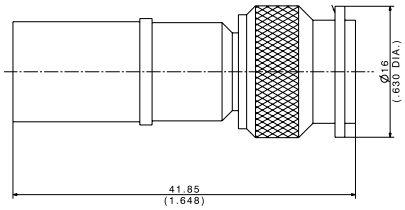

Fig. 3

HUBER+SUHNER type	Item no.	Cable group (example)	Packaging	Assembly instruction	Crimp insert	Fig.
11_TNC-R50-3-42/133_NE	22658965	U7 (RG_58_C/U, ENVIROFLEX_B58)	single	3015	2 B	1
11_TNC-R50-3-43/133_NE	22659046	U9, U39 (RG_223_/U, ENVIROFLEX_B223)		3015	2 B	1
11_TNC-R50-4-76/133_NE	84031534	X28 (SPUMA_240)		0000246324	2 C	2
11_TNC-R50-7-13/133_NE	84031806	U30 (SPUMA_400)		27288	4 D	3

Straight cable jacks (reverse)

For flexible cables
- Cable attachment: HUBER+SUHNER full crimp



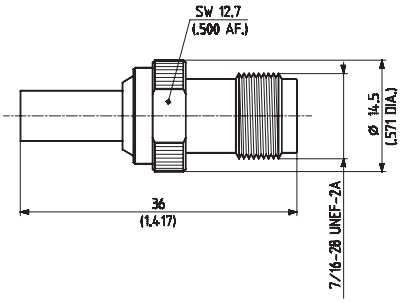

HUBER+SUHNER type	Item no.	Cable group (example)	Packaging	Assembly instruction	Crimp insert
21_TNC-R50-3-14/133_NE	23003716	U7 (RG_58_C/U, ENVIROFLEX_B58)	single	27221	2 B

Cable groups see page 32 | Assembly tools see page 531 | Mounting holes/PCB layouts see page 561

L'IMPULSION
Retrouvez nous sur
www.limpulsion.fr

Reverse polarity connectors TNC

Straight bulkhead cable jacks (reverse)

For flexible cables

- Cable attachment: HUBER+SUHNER full crimp
- With panel seal
- Mounting hole ML 4



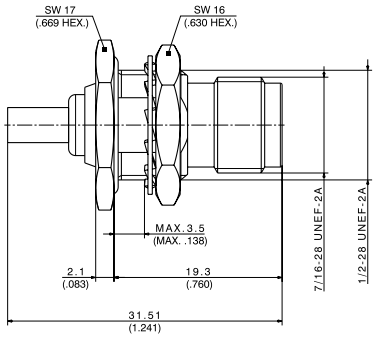

Fig. 1

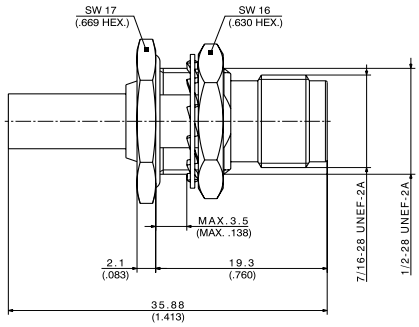

Fig. 2

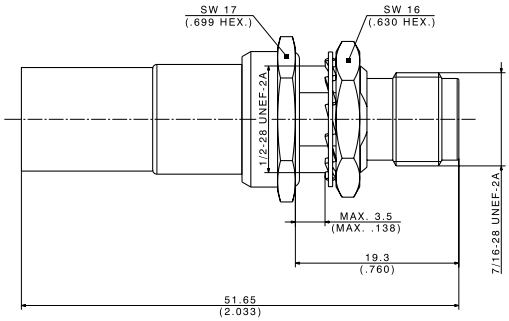

Fig. 3

HUBER+SUHNER type	Item no.	Cable group (example)	Packaging	Assembly instruction	Crimp insert	Fig.
24_TNC-R50-2-44/133_NE	84064623	U2 (RG_316_/U, ENVIROFLEX_316)	single	0000179123	1 A	1
24_TNC-R50-3-25/133_NE	84031952	U9 (RG_223_/U, ENVIROFLEX_B223)		27221	2 B	2
24_TNC-R50-4-60/133_NE	84032154	X28 (SPUMA_240)		0000246324	2 C	2
24_TNC-R50-7-4/133_NE	84032531	U30 (SPUMA_400)		27288	4 D	3

Cable groups see page 32 | Assembly tools see page 531 | Mounting holes/PCB layouts see page 561

L'IMPULSION
Retrouvez nous sur
www.limpulsion.fr

Reverse polarity connectors SMA

Straight cable plugs (reverse)

For flexible cables

- Cable attachment: centre contact soldered/outer contact crimp



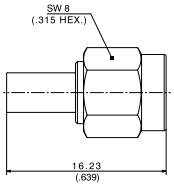

Fig. 1

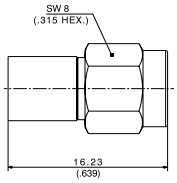

Fig. 2

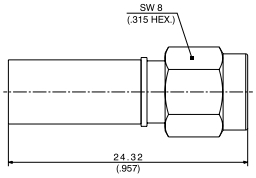

Fig. 3

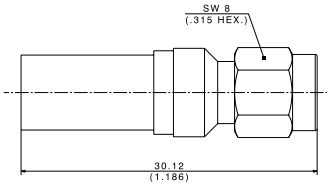

Fig. 4

HUBER+SUHNER type	Item no.	Cable group (example)	Packaging	Assembly instruction	Crimp insert	Fig.
11_SMA-R50-2-113/133_NE [1]	84130701	U4 (K_02252_D, ENVIROFLEX_316_D)	single	0000360393	A	1
11_SMA-R50-3-238/133_NE [1]	84130704	U9, U11, U41 (RG_223_/U, ENVIROFLEX_B223)	single	0000360525	B	2
11_SMA-R50-3-48/133_NE [1]	22658747	U7 (RG_58_C/U, ENVIROFLEX_B58)	single	M27192	B	3
11_SMA-R50-4-97/133_NH [1]	84027004	S16, X9, X28, X34 (SX_04172_B-60, SPUMA_240, SPUMA_240-FR-01, SPUMA_240-RS-FR)	bulk 100 pcs.	0000241878	C	4

[1] Use torque wrench 74_Z-0-0-79

Cable groups see page 32 | Assembly tools see page 531 | Mounting holes/PCB layouts see page 561

L'IMPULSION | Retrouvez nous sur www.limpulsion.fr

Reverse polarity connectors SMA

Right angle cable plugs (reverse)

For flexible cables

- Cable attachment: centre contact soldered/outer contact crimp



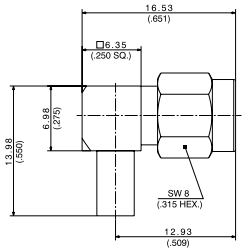

Fig. 1

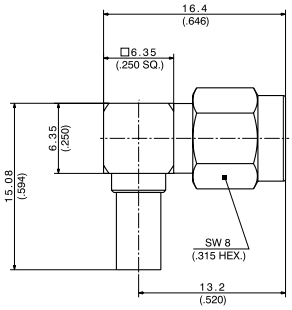

Fig. 2

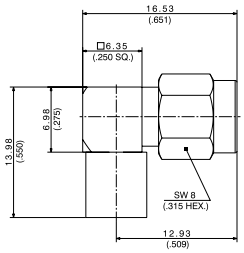

Fig. 3

HUBER+SUHNER type	Item no.	Cable group (example)	Packaging	Assembly instruction	Crimp insert	Fig.
16_SMA-R50-2-113/133_NE [1]	84130710	U4 (K_02252_D)	single	0000368977	A	1
16_SMA-R50-2-149/133_NH [1]	23039493	U2 (RG_316_/U)	bulk 100 pcs.	27543	A	2
16_SMA-R50-3-16/133_NE [1]	84130713	U9, U11, U41 (RG_223_/U)	single	0000368978	B	3

[1] Use torque wrench 74_Z-0-0-79

Cable groups see page 32 | Assembly tools see page 531 | Mounting holes/PCB layouts see page 561

L'IMPULSION
Retrouvez nous sur
www.limpulsion.fr

Reverse polarity connectors SMA

Straight cable jacks (reverse)

For flexible cables

- Cable attachment: centre contact soldered/outer contact crimp

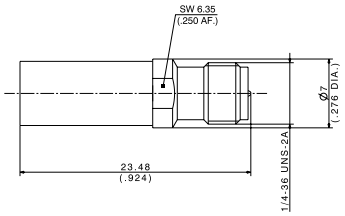



HUBER+SUHNER type	Item no.	Cable group (example)	Packaging	Assembly instruction	Crimp insert
21_SMA-R50-3-51/133_NE	84032514	U7 (RG_58_C/U, ENVIROFLEX_B58)	single	0000246751	B

Straight bulkhead cable jacks (reverse)

For flexible cables

- Cable attachment: centre contact soldered/outer contact crimp
- With panel seal

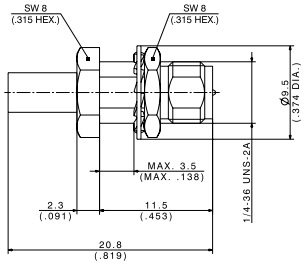



HUBER+SUHNER type	Item no.	Cable group (example)	Packaging	Assembly instruction	Mounting hole	Crimp insert
24_SMA-R50-2-51/133_NE	23011465	U2 (RG_316_/U, ENVIROFLEX_316)	single	0000292354	ML 35	A

Cable groups see page 32 | Assembly tools see page 531 | Mounting holes/PCB layouts see page 561

L'IMPULSION
Retrouvez nous sur
www.limpulsion.fr

Reverse polarity connectors – terminations SMA

50 Ω, plug (reverse)

- 1 Watt
- DC to 6 GHz



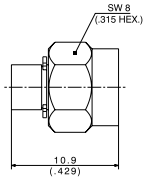

HUBER+SUHNER type	Item no.	Packaging	VSWR		Power
			DC to 3 GHz	3 to 6 GHz	
65_SMA-R50-0-70/133_NE	84043759	single	1.15	1.2	1 Watt

Cable groups see page 32 | Assembly tools see page 531 | Mounting holes/PCB layouts see page 561

Reverse polarity connectors – adaptors

- Straight
- Plug (reverse) to jack (standard)



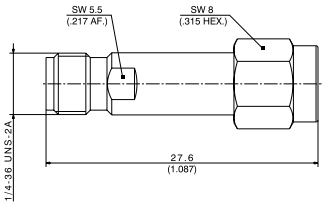

HUBER+SUHNER type	Item no.	Packaging	Side 1 (male)	Side 2 (female)
33_SMA-R50-0-5/111_NE	23003618	single	SMA reverse	SMA standard

- Angle
- Plug (reverse) to jack (standard)



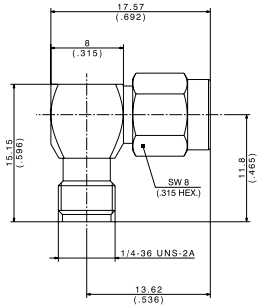

Fig. 1 Fig. 2

HUBER+SUHNER type	Item no.	Packaging	Side 1 (male)	Side 2 (female)	Fig.
53_SMA-R50-0-3/111_NE	23029833	single	SMA reverse	SMA standard	1

Cable groups see page 32 Assembly tools see page 531 Mounting holes/PCB layouts see page 561

Precision multicoax lines (MXPM, MXP)

Description

The HUBER+SUHNER MXPM and MXP connector lines are the perfect fit in a world where performance, speed and density matter.

Both lines are excellent solutions for bench-top testing, system testing as well as for internal cabling in automated test equipment.

The entire MXPM and MXP assembly assortment comes with the highly flexible and ultra-stable Multiflex cable as a standard.

- MXPM70 – is a pioneering multicoax solution that supports up to 70 GHz (with option to 85 GHz). By offering a high density pitch (2.54 mm, 0.1 inch), the MXPM guarantees a satisfying experience with its user-friendly magnet mount connection, making performance and reliability affordable.
- MXP50 – is the perfect multicoax solution for leading-edge testing up to 50 GHz. MXP50, MXP40 and MXP18 come with a 4 mm (0.157 inch) pitch centre-to-centre and a convenient slide-on mounting. MXP50 is mechanically compatible with MXP18 and MXP40.
- MXP40 – the state-of-the-art multicoax solution for testing up to 40 GHz. MXP40 is mechanically compatible with MXP18 and MXP50.
- MXP18 – best value for money. MXP18 allows accurate testing up to 18 GHz. MXP18 is mechanically compatible with MXP40 and MXP50.

Content

Description	457
MXPM70	458
MXP50	468
MXP40	477
MXP18	482

Interface dimensions conformable to the standards:

HUBER+SUHNER proprietary interface standard

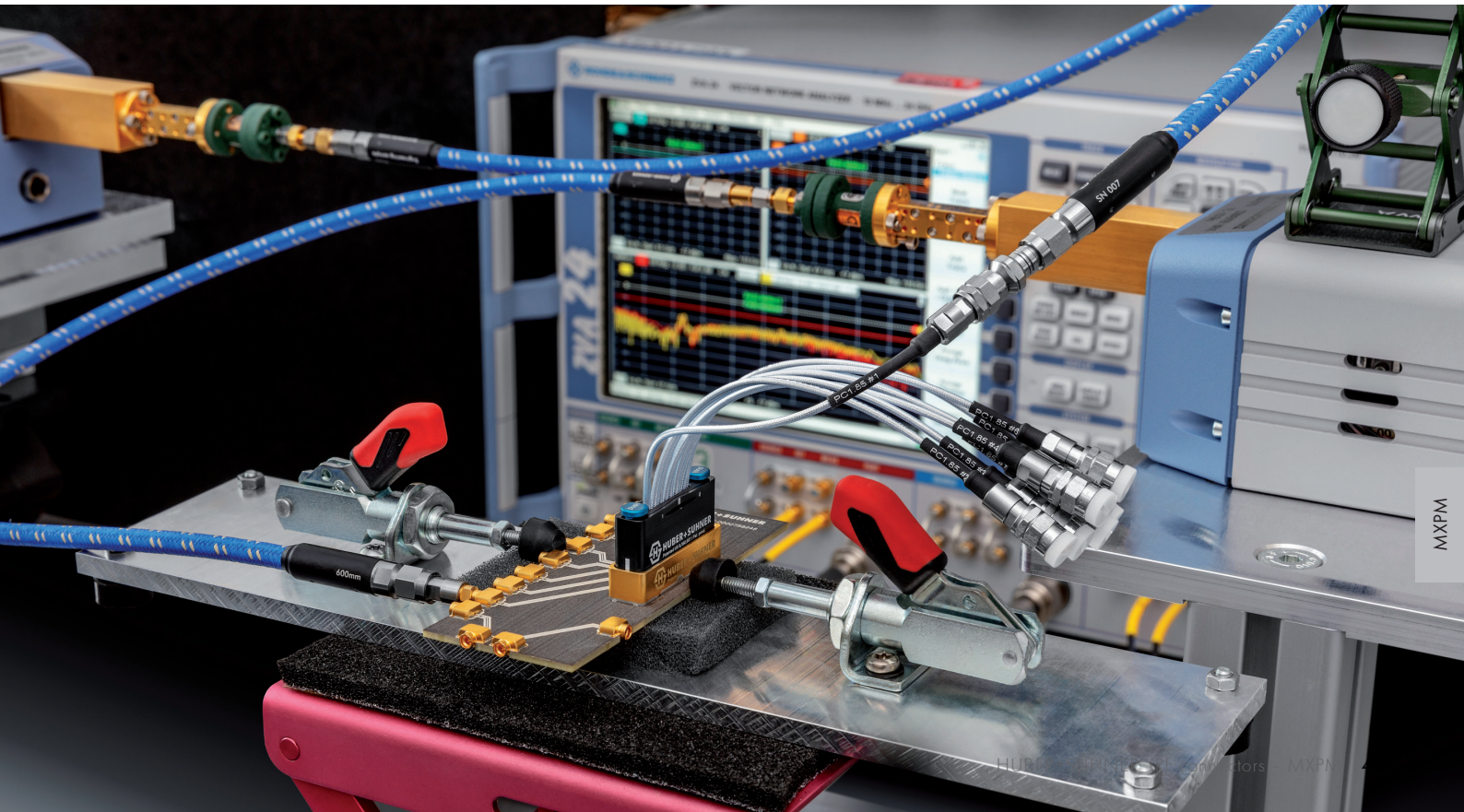

L'IMPULSION
Retrouvez nous sur
www.limpulsion.fr

MXPM70 – 70 GHz multicoax solution

Key features

- Ultra-precise and highly repeatable
- Best in class signal integrity
- 2.54 mm (0.1 in.) pitch centre-to-centre
- Magnetic locking mechanism
- Automatic interface protection
- Cost-efficient PCB socket

Benefits

- **Pioneering design**
  The pioneering and advantageous design allows ultra-precise and highly repeatable S-parameter measurements of up to 70 GHz with minimal impedance variation at the PCB transition
- **Data analysis of up the 56 Gbps and beyond**
  The broadband return loss and insertion loss characteristics over the entire bandwidth guarantee best in class signal integrity for data analysis of up to 56 Gbps and beyond
- **Shortest traces on board**
  The ultra-compact design with its 2.54 mm (0.1 in.) pitch centre-to-centre makes MXPM as closely positioned as possible to the DUT/chip to keep traces short and losses low
- **Fail-safe connecting mechanism**
  The integrated magnetic locking mechanism prevents inappropriately mated counterparts and ensures that the electrical connecting reference is defined as exactly as possible at any time
- **Interface protection in disconnected condition**
  The automatic interface protection safeguards every single channel from mechanical damage when disconnected
- **Reduced expenses for PCB architecture**
  The cost-efficient PCB socket protects expensive and sensitive PCB material, eliminates imprecise and rough surfaces and greatly reduces architecture expenses, especially since there is no mandatory requirement for hard-gold plating

Range of standard products (1×8 and 2×8 ganged systems)
- 1×8 and 2×8 straight PCB sockets (semi-SMD technology)
- 1×8 and 2×8 breakout assemblies MXPM-to-PC1.85
- 1×8 and 2×8 jumper assemblies MXPM-to-MXPM
- Customised assemblies on request

L'IMPULSION | Retrouvez nous sur www.limpulsion.fr

MXPM70 – technical data

Electrical data (typical)	Testing condition	Performance
Impedance		50 Ω
Interface frequency max.		70 GHz
Return loss	gated measurement: cable connector/ PCB transition PCB: Rogers RO3003 cable: Multiflex 53-02	≥ 20 dB up to 50 GHz ≥ 17 dB up to 70 GHz
Insertion loss		according Multiflex 53-02
Phase match		+/– 1 ps

Mechanical data (typical)	Testing condition	Performance
Number of matings		≥ 500
Pitch centre-to-centre		2.54 mm (0.1 in.)

Environmental data (typical)	Testing condition	Performance
Temperature range		0 °C ... +85 °C/32 °F ... 185 °F
2011/65/EU (RoHS)		compliant
2006/1907/EC (REACH)		compliant

Material data cable connector	Material	Surface plating
Centre contact	copper beryllium alloy	SUCOPRO gold plating
Outer contact	copper beryllium alloy	SUCOPRO gold plating
Body	aluminium	black/blue anodised
Insulator	PEEK	n/a
Other parts	neodym (magnets)	n/a

Material data PCB socket	Material	Surface plating
Outer contact	brass	SUCOPRO gold plating
Body	brass	SUCOPRO gold plating
Other parts	stainless steel	n/a

Performance values are typical for the connector interface. Individual component or connector performance may vary depending on the connector design, attachment (e.g. cable, PCB) or application. For detailed specifications please refer to the specific data sheets on our website www.hubersuhner.com.

L'IMPULSION
Retrouvez nous sur
www.limpulsion.fr

MXPM70 – PCB socket

- Pitch 2.54 mm (0.1 in.)
- Via-in-pad capable
- Semi-SMD technology – guide pins for better mechanical stability of solder joint

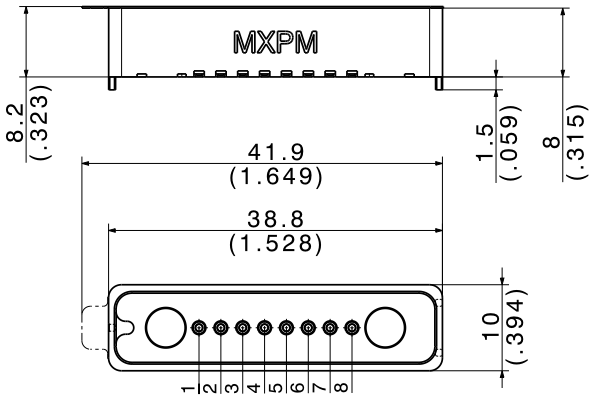



Ordering information

Type 1×8 ganged	Item number	Packaging	Characteristics
1×8A_82_MXPM-S50-0-1/-11_NE	85091041	single	asymmetric design (keyed)
1×8A_82_MXPM-S50-0-1/-11_NM	85104380	tape + reel 100	

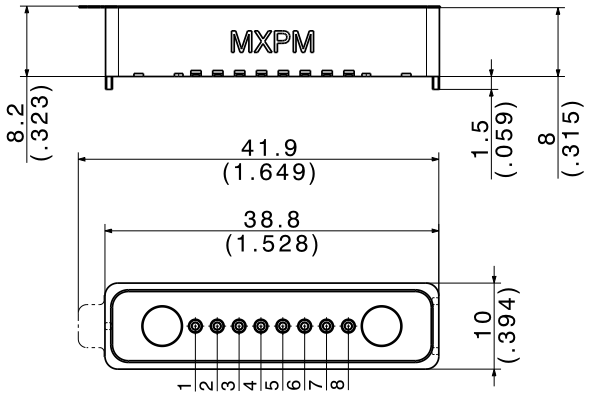



Ordering information

Type 1×8 ganged	Item number	Packaging	Characteristics
1×8A_82_MXPM-S50-0-2/-11_NE	85085226	single	symmetric design (unkeyed)
1×8A_82_MXPM-S50-0-2/-11_NM	85104409	tape + reel 100	

Cable groups see page 32 | Assembly tools see page 531 | Mounting holes/PCB layouts see page 561

L'IMPULSION
Retrouvez nous sur
www.limpulsion.fr

MXPM70 – PCB socket

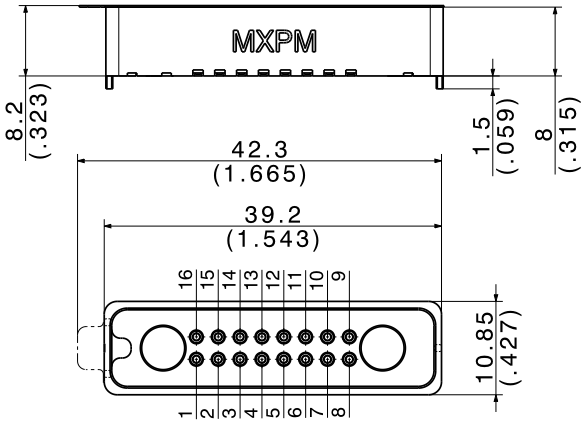



Ordering information

Type 2×8 ganged	Item number	Packaging	Characteristics
2×8A_82_MXPM-S50-0-1/-11_NE	85091060	single	asymmetric design (keyed)
2×8A_82_MXPM-S50-0-1/-11_NM	85104412	tape + reel 100	

Cable groups see page 32 | Assembly tools see page 531 | Mounting holes/PCB layouts see page 561

MXPM70 – breakout to PC 1.85

- 1×8 ganged versions
- Breakout to female PC 1.85



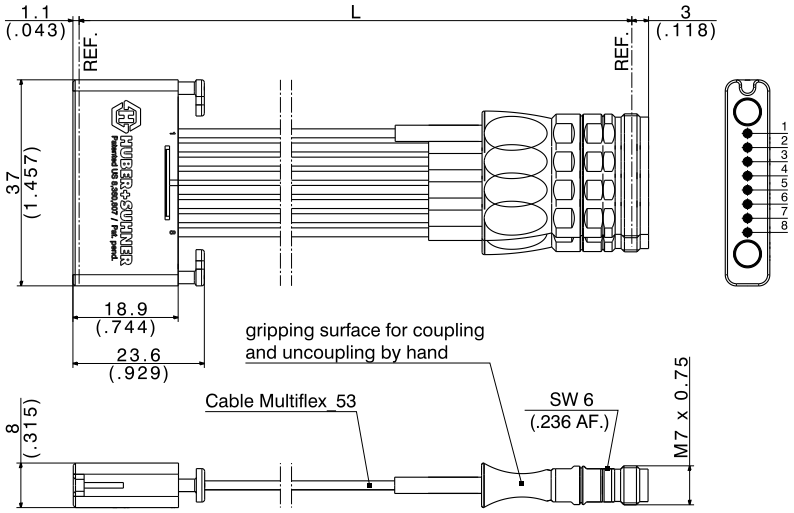

Ordering information

Type 1×8 ganged	Item number	Length	Characteristics
MF53/1×8A_11MXPM/21PC185_e/76	85101216	76 mm (3 in.)	single channels numbered with ergo grip on PC 1.85
MF53/1×8A_11MXPM/21PC185_e/152	85098172	152 mm (6 in.)	

Cable groups see page 32 | Assembly tools see page 531 | Mounting holes/PCB layouts see page 561

MXPM70 – breakout to PC 1.85

- 1×8 ganged versions
- Breakout to male PC 1.85



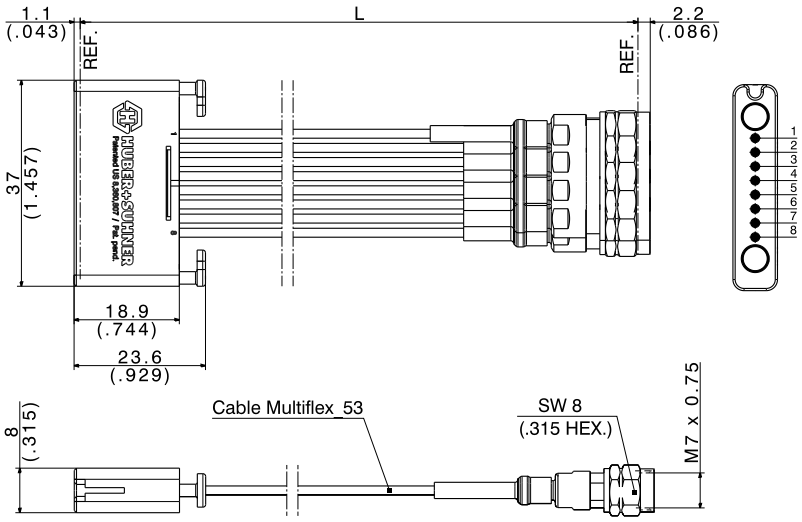

Ordering information

Type 1×8 ganged	Item number	Length	Characteristics
MF53/1×8A_11MXPM/11PC185/76	85097884	76 mm (3 in.)	single channels numbered
MF53/1×8A_11MXPM/11PC185/152	85085482	152 mm (6 in.)	

Cable groups see page 32 | Assembly tools see page 531 | Mounting holes/PCB layouts see page 561

L'IMPULSION
Retrouvez nous sur
www.limpulsion.fr

MXPM70 – breakout to PC 1.85

- 2×8 ganged versions
- Breakout to female PC 1.85



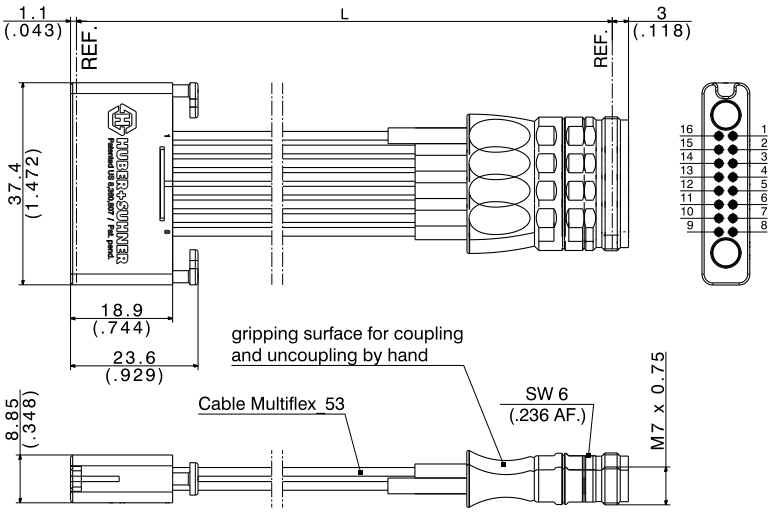

Ordering information

Type 2×8 ganged	Item number	Length	Characteristics
MF53/2×8A_11MXPM/21PC185_e/76	85099712	76 mm (3 in.)	single channels numbered with ergo grip on PC 1.85
MF53/2×8A_11MXPM/21PC185_e/152	85096261	152 mm (6 in.)	

Cable groups see page 32 | Assembly tools see page 531 | Mounting holes/PCB layouts see page 561

MXPM70 – breakout to PC 1.85

- 2×8 ganged versions
- Breakout to male PC 1.85



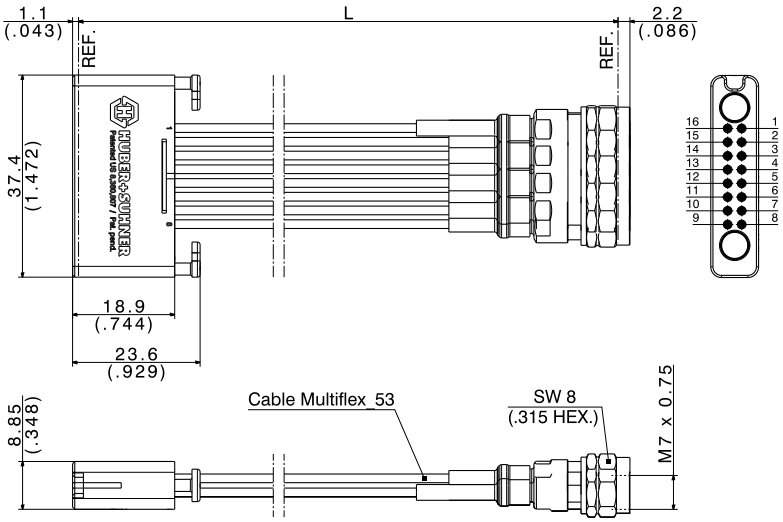

Ordering information

Type 2×8 ganged	Item number	Length	Characteristics
MF53/2×8A_11MXPM/11PC185/76	on request, 85107417	76 mm (3 in.)	single channels numbered
MF53/2×8A_11MXPM/11PC185/152	85091160	152 mm (6 in.)	
MF53/2×8A_11MXPM/11PC185/305	85102802	305 mm (12 in.)	

Cable groups see page 32 | Assembly tools see page 531 | Mounting holes/PCB layouts see page 561

L'IMPULSION
Retrouvez nous sur
www.limpulsion.fr

MXPM70 – jumper

- 1×8 ganged versions
- Pin map: 1-to-8 or 1-to-1

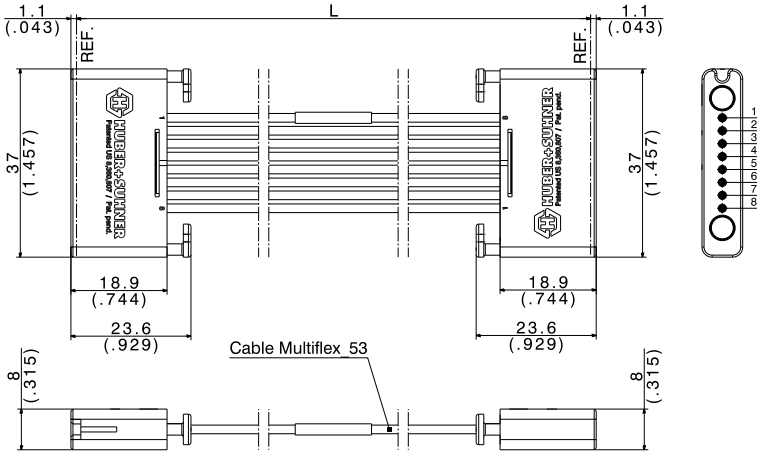



Ordering information

Type 1×8 ganged	Item number	Length	Characteristics
MF53/1×8A_11MXPM/11MXPM/152	85101230	152 mm (6 in.)	pin map: 1-to-8
MF53/1×8A_11MXPM/11MXPM/305	85107418	305 mm (12 in.)	

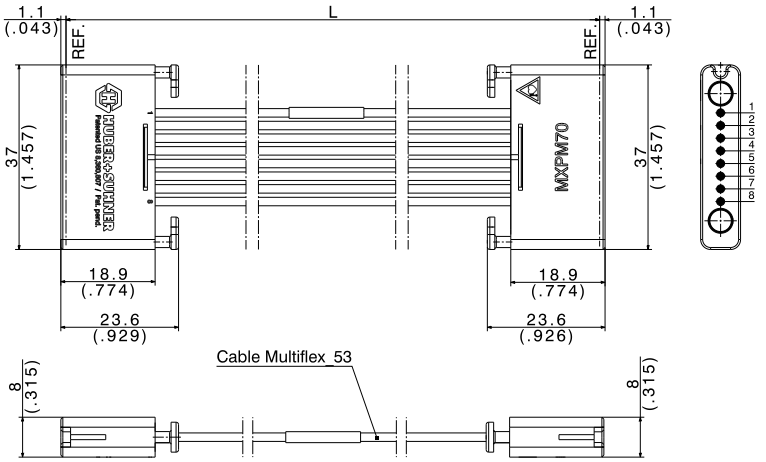



Ordering information

Type 1×8 ganged	Item number	Length	Characteristics
MF53/1×8A_11MXPM/11MXPM/152_1	on request, 85107423	152 mm (6 in.)	pin map: 1-to-1
MF53/1×8A_11MXPM/11MXPM/305_1	on request, 85107424	305 mm (12 in.)	

Cable groups see page 32 | Assembly tools see page 531 | Mounting holes/PCB layouts see page 561

MXPM70 – jumper

- 2×8 ganged versions
- Pin map: 1-to-16 or 1-to-1

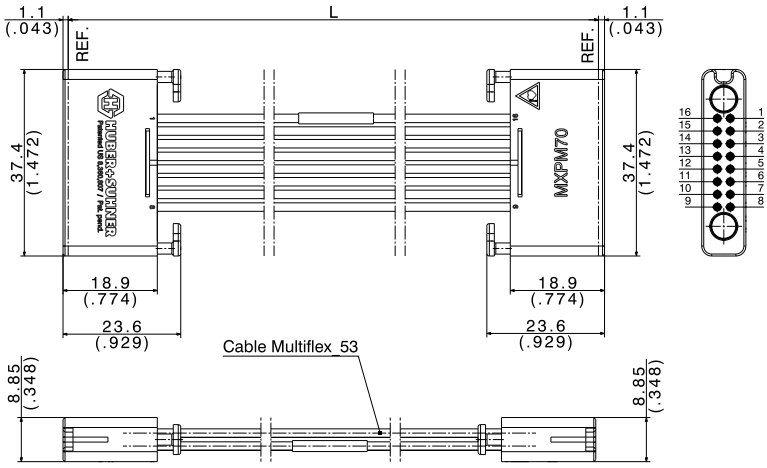



Ordering information

Type 2×8 ganged	Item number	Length	Characteristics
MF53/2×8A_11MXPM/11MXPM/152	on request, 85107419	152 mm (6 in.)	pin map: 1-to-16
MF53/2×8A_11MXPM/11MXPM/305	on request, 85107420	305 mm (12 in.)	

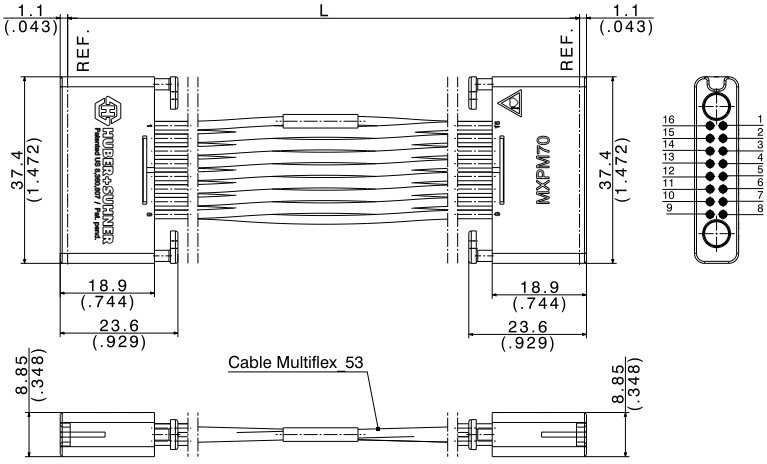



Ordering information

Type 2×8 ganged	Item number	Length	Characteristics
MF53/2×8A_11MXPM/11MXPM/152_1	on request, 85107421	152 mm (6 in.)	pin map: 1-to-1
MF53/2×8A_11MXPM/11MXPM/305_1	on request, 85107422	305 mm (12 in.)	

Cable groups see page 32 | Assembly tools see page 531 | Mounting holes/PCB layouts see page 561

L'IMPULSION
Retrouvez nous sur
www.limpulsion.fr

MXP50 – 50 GHz multicoax solution

Key features

- Operating range at up to 50 GHz
- Standard absolute phase matching down to ± 2 ps
- 4 mm (0.157 inch) pitch centre-to-centre
- Slide-on mounting – no threading
- Highly flexible and ultra stable Multiflex cable
- Extensive technical support

Benefits

- **Testing at the highest stage**
  The broadband characteristics and the true 50 GHz coaxial-to-PCB transition allow the design of evaluation boards (test set-ups) for the latest generation of semiconductor standards.
- **Space saving**
  Due to the dense interface pitch, the PCB connectors take up less space on boards. This is advantageous, as expensive high-performance board material is essential for good signal integrity at high data rates.
- **Shorter transmission lines**
  The compact design of the PCB connector allows it to be positioned directly adjacent to the DUT/chip. This helps to keep the transmission lines on the board short and the losses low.
- **Reliable push-on mating**
  Thanks to the revolutionary slide-on interface design, assemblies can be replugged quickly and easily, while guaranteeing stable electrical values even after numerous mating cycles.
- **Easy channel handling**
  The highly flexible Multiflex cable in combination with a detailed numbering and coding system ensures easy channel handling without any degradation of the signal integrity.
- **Overall cost savings and service benefits**
  Reduced cost of ownership compared to single interfaces thanks to lower outlay for PCB population and channel handling. 3D files, modelling data and customised footprints are available upon request.

Comprehensive range of standard products (1×8 and 2×8 ganged systems)

- 1×8 and 2×8 straight PCB connectors (SMD)
- 1×8 and 2×8 breakout assemblies MXP-to-PC 2.4
- 1×8 and 2×8 jumper assemblies MXP-to-MXP
- Loop back assembly
- 2×8 MXP-to-MXP board-to-board adaptor
- Standardised SUCOFLEX assembly lengths with different classes of phase matching
- Customised assemblies on request

MXP50 – technical data

Electrical data (typical)	Testing condition	Performance
Impedance		50 Ω
Interface frequency max.		50 GHz
Return loss	gated measurement: cable connector/ PCB transition PCB: Rogers RO3003 cable: Multiflex 53-02	≥ 20 dB up to 22.5 GHz ≥ 15 dB up to 50 GHz
Insertion loss		according Multiflex 53-02
Phase match		+/– 2 ps

Mechanical data (typical)	Testing condition	Requirements
Mating force (per single channel)		max. 3.4 N (typical 1.1 N)
Demating force (per single channel)		max. 3.4 N (typical 1.1 N)
Number of matings	MIL-PRF-39012, paragraph 4.7.12	≥ 500
Pitch centre-to-centre		4 mm (0.157 in.)

Environmental data (typical)	Testing condition	Requirements
Temperature range		–55 °C ... 85 °C/–67 °F ... 185 °F
Thermal aging (mated condition)	IEC 60068-2-2, test B	120 °C/260 h
Change of temperature	IEC 60068-2-14, test na	assembly: –55°C ... 85°C/–67°F ...185°F PCB: –55°C ... 85°C/–67°F ...185°F
Vibration	IEC 60068-2-6	on request
Mechanical shock (transport)	MIL-STD-202, method 213, condition I	100 g/6 ms
Damp heat steady state	IEC 60068-2-78, test ca	40 °C (104 °F)/humidity 93 %/96 h
2011/65/EU (RoHS)		compliant
2006/1907/EC (REACH)		compliant

Material data cable connector	Material	Coating
Center contact	copper beryllium	SUCOPRO® gold plating
Outer contact	brass	SUCOPRO® gold plating
Body	aluminium	gold anodised
Insulator	PEEK	n/a

Material data PCB connector	Material	Coating
Center contact	copper beryllium	SUCOPRO® gold plating
Outer contact	BZ4	SUCOPRO® gold plating
Body	brass	SUCOPRO® gold plating
Insulator	PEEK	n/a

Performance values are typical for the connector interface. Individual component or connector performance may vary depending on the connector design, attachment (e.g. cable, PCB) or application. For detailed specifications please refer to the specific data sheets on our website www.hubersuhner.com.

L'IMPULSION
Retrouvez nous sur
www.limpulsion.fr

MXP50 – PCB connectors

- Pitch 4 mm (0.16")
- Via-in-pad capable
- 0.7 mm (0.028") pin size allows easy matching to smallest trace width
- SMD technology – ground pins for better mechanical stability of solder joint

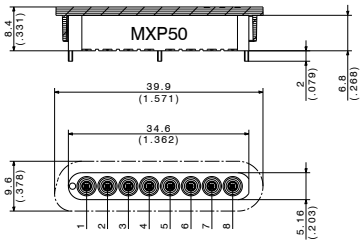

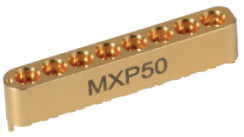

Type 1×8 ganged	Item no.	Packaging	Notes
1×8A_81_MXP-S50-0-3/111_NE	85022694	tape	symmetric design (non keyed)

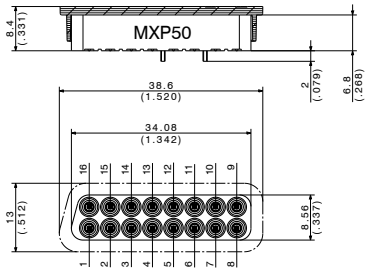



Type 2×8 ganged	Item no.	Packaging	Notes
2×8A_81_MXP-S50-0-4/111_NE	85023106	tape	assymmetric design (keyed) optimised grounding pin layout for differential pair routing

Cable groups see page 32 | Assembly tools see page 531 | Mounting holes/PCB layouts see page 561

L'IMPULSION
Retrouvez nous sur
www.limpulsion.fr

MXP50 – breakout to PC 2.4

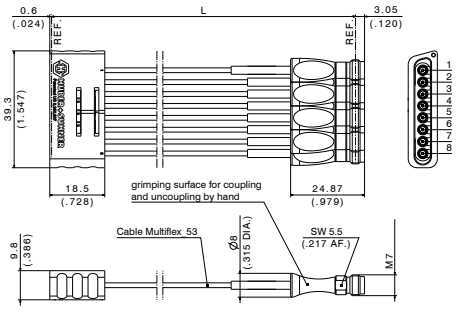

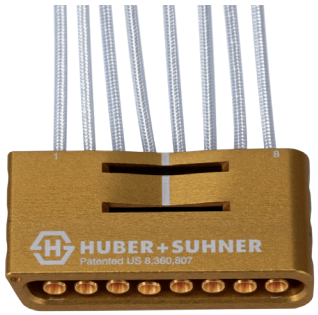

Type 1×8 ganged	Item no.	Length	Notes
MF53/1×8A_21MXP/21PC24_erg/152	85024118	152 mm (6″)	single channels numbered with ergo grip on PC 2.4 side
MF53/1×8A_21MXP/21PC24_erg/229	85024116	229 mm (9″)	
MF53/1×8A_21MXP/21PC24_erg/305	85024113	305 mm (12″)	

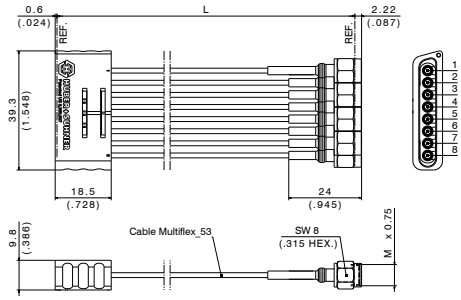

Type 1×8 ganged	Item no.	Length	Notes
MF53/1×8A_21MXP/11PC24/152	85025933	152 mm (6″)	single channels numbered
MF53/1×8A_21MXP/11PC24/229	85025934	229 mm (9″)	
MF53/1×8A_21MXP/11PC24/305	85025935	305 mm (12″)	

Cable groups see page 32 | Assembly tools see page 531 | Mounting holes/PCB layouts see page 561

L'IMPULSION
Retrouvez nous sur
www.limpulsion.fr

MXP50 – breakout to PC 2.4

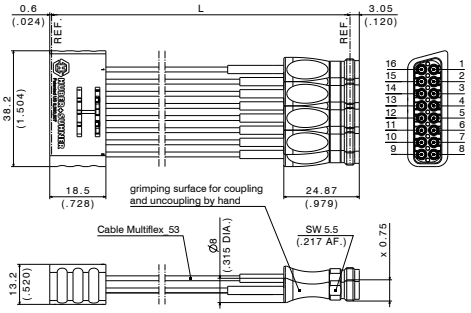

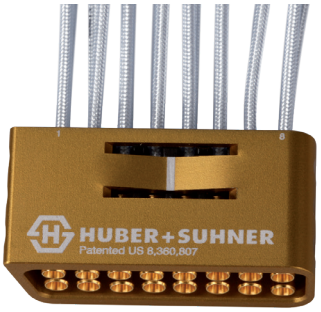

Type 2×8 ganged	Item no.	Length	Notes
MF53/2×8A_21MXP/21PC24_erg/152	85023135	152 mm (6″)	single channels numbered with ergo grip on PC 2.4 side
MF53/2×8A_21MXP/21PC24_erg/229	85023167	229 mm (9″)	
MF53/2×8A_21MXP/21PC24_erg/305	85023168	305 mm (12″)	

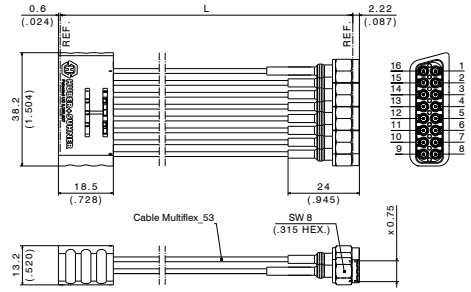

Type 2×8 ganged	Item no.	Length	Notes
MF53/2×8A_21MXP/11PC24/152	85025930	152 mm (6″)	single channels numbered
MF53/2×8A_21MXP/11PC24/229	85025932	229 mm (9″)	
MF53/2×8A_21MXP/11PC24/305	85025931	305 mm (12″)	

Cable groups see page 32 | Assembly tools see page 531 | Mounting holes/PCB layouts see page 561

L'IMPULSION
Retrouvez nous sur
www.limpulsion.fr

MXP50 – breakout to MMPX



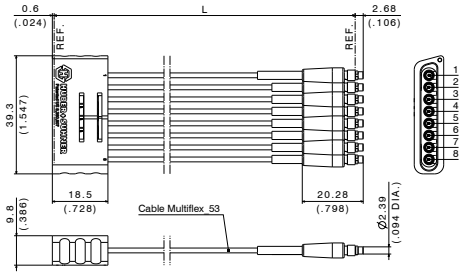

Type 1×8 ganged	Item no.	Length	Notes
MF53/1×8A_21MXP/11MMPX/152	85021537	152 mm (6″)	single channels numbered
MF53/1×8A_21MXP/11MMPX/229	85018173	229 mm (9″)	
MF53/1×8A_21MXP/11MMPX/305	85025640	305 mm (12″)	
MF53/1×8A_21MXP/11MMPX/610	85025641	610 mm (24″)	

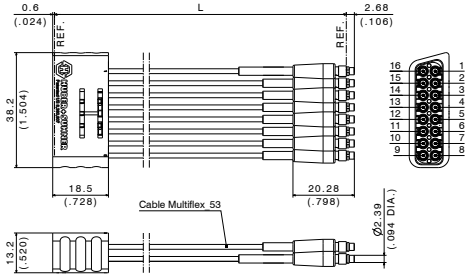

Type 2×8 ganged	Item no.	Length	Notes
MF53/2×8A_21MXP/11MMPX/152	85025642	152 mm (6″)	single channels numbered
MF53/2×8A_21MXP/11MMPX/229	85024572	229 mm (9″)	
MF53/2×8A_21MXP/11MMPX/305	85025643	305 mm (12″)	
MF53/2×8A_21MXP/11MMPX/610	85006750	610 mm (24″)	

Cable groups see page 32 | Assembly tools see page 531 | Mounting holes/PCB layouts see page 561

MXP50 – jumper

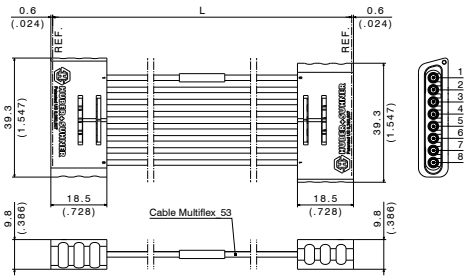

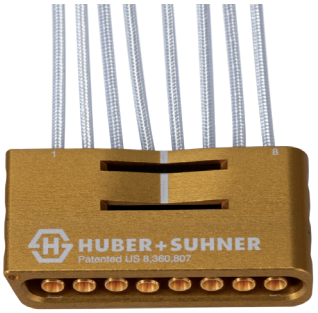

Type 1×8 ganged	Item no.	Length	Notes
MF53/1×8A_21MXP/21MXP/152	84129711	152 mm (6″)	pin map: 1 to 8
MF53/1×8A_21MXP/21MXP/229	85009276	229 mm (9″)	
MF53/1×8A_21MXP/21MXP/305	84099960	305 mm (12″)	
MF53/1×8A_21MXP/21MXP/610	84100060	610 mm (24″)	

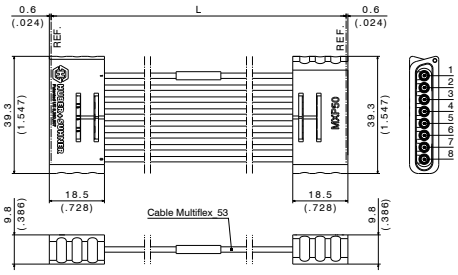

Type 1×8 ganged	Item no.	Length	Notes
MF53/1×8A_21MXP/21MXP/152_1	84129722	152 mm (6″)	pin map: 1 to 1
MF53/1×8A_21MXP/21MXP/229_1	85009284	229 mm (9″)	
MF53/1×8A_21MXP/21MXP/305_1	84099634	305 mm (12″)	
MF53/1×8A_21MXP/21MXP/610_1	84099914	610 mm (24″)	

Cable groups see page 32 Assembly tools see page 531 Mounting holes/PCB layouts see page 561

L'IMPULSION
Retrouvez nous sur
www.limpulsion.fr

MXP50 – jumper

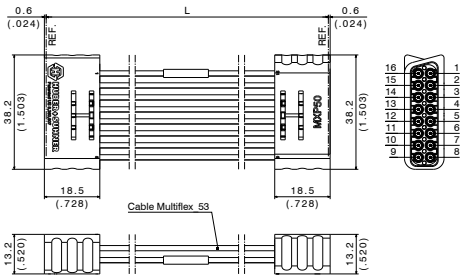

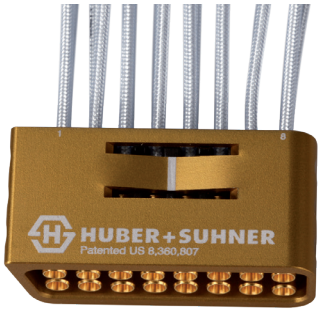

Type 2×8 ganged	Item no.	Length	Notes
MF53/2×8A_21MXP/21MXP/152	85009288	152 mm (6″)	pin map: 1 to 16
MF53/2×8A_21MXP/21MXP/229	85009287	229 mm (9″)	
MF53/2×8A_21MXP/21MXP/305	84099955	305 mm (12″)	
MF53/2×8A_21MXP/21MXP/457	84131766	457 mm (18″)	
MF53/2×8A_21MXP/21MXP/610	84099957	610 mm (24″)	

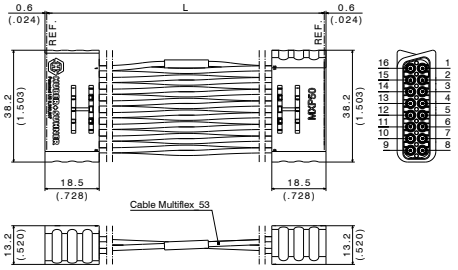

Type 2×8 ganged	Item no.	Length	Notes
MF53/2×8A_21MXP/21MXP/152_1	84116942	152 mm (6″)	pin map: 1 to 1
MF53/2×8A_21MXP/21MXP/229_1	85009289	229 mm (9″)	
MF53/2×8A_21MXP/21MXP/305_1	84099487	305 mm (12″)	
MF53/2×8A_21MXP/21MXP/457_1	84150019	457 mm (18″)	
MF53/2×8A_21MXP/21MXP/610_1	84099511	610 mm (24″)	

Cable groups see page 32 | Assembly tools see page 531 | Mounting holes/PCB layouts see page 561

L'IMPULSION
Retrouvez nous sur
www.limpulsion.fr

MXP50 – loop back

Typical application

Channel bridging

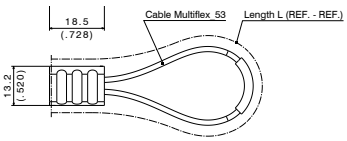

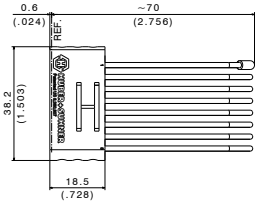

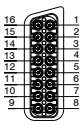

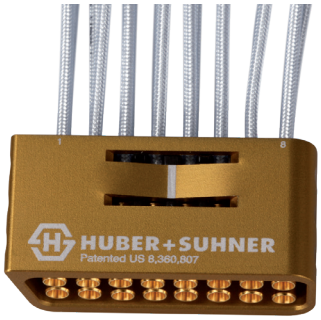

Type 2×8 ganged	Item no.	Length	Notes
MF53/2×8A_21MXP/152	84095097	152 mm (6")	loop back configuration pin map: 1 to 16

MXP – board-to-board adaptor

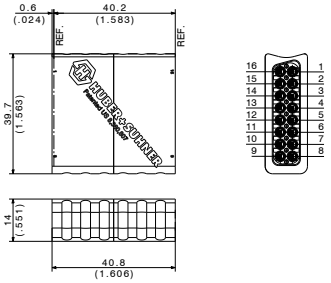



Type 2×8 ganged	Item no.	Height	Notes
2×8A_31_MXP-50-0-1	85022967	40 mm	limited misalignment tolerance

Cable groups see page 32 | Assembly tools see page 531 | Mounting holes/PCB layouts see page 561

L'IMPULSION | Retrouvez nous sur www.limpulsion.fr

MXP40 – 40 GHz multicoax solution

Key features

- Operating range at up to 40 GHz
- Standard absolute phase matching down to ± 2 ps
- 4 mm (0.157 inch) pitch centre-to-centre
- Slide-on mounting – no threading
- Highly flexible and ultra stable Multiflex cable
- Extensive technical support

Benefits

- **State-of-the-art-testing**
  The broadband characteristics and the true 40 GHz coaxial-to-PCB transition allow the design of evaluation boards (test set-ups) for most of the existing semiconductor standards.
- **Space saving**
  Due to the dense interface pitch, the PCB connectors take up less space on boards. This is advantageous, as expensive high-performance board material is essential for good signal integrity at high data rates.
- **Shorter transmission lines**
  The compact design of the PCB connector allows it to be positioned directly adjacent to the DUT/chip. This helps to keep the transmission lines on the board short and the losses low.
- **Reliable push-on mating**
  Thanks to the revolutionary slide-on interface design, assemblies can be replugged quickly and easily, while guaranteeing stable electrical values even after numerous mating cycles.
- **Easy channel handling**
  The highly flexible Multiflex cable in combination with a detailed numbering and coding system ensure easy channel handling without any degradation of the signal integrity.
- **Overall cost savings and service benefits**
  Reduced cost of ownership compared to single interfaces thanks to lower outlay for PCB population and channel handling. 3D files, modelling data and customised footprints are free of charge.

Comprehensive range of standard products (1×8 and 2×8 ganged systems)

- 1×8 and 2×8 straight PCB connectors (SMD)
- 1×8 and 2×8 breakout assemblies MXP-to-SK (2.92 mm standard)
- Standardised SUCOFLEX assembly lengths with different classes of phase matching
- Customised assemblies on request

L'IMPULSION Retrouvez nous sur www.limpulsion.fr

MXP40 – technical data

Electrical data (typical)	Testing condition	Performance
Impedance		50 Ω
Interface frequency max.		40 GHz
Return loss	gated measurement: cable connector/ PCB transition PCB: Rogers RO3003 cable: Multiflex 53-02	≥ 20 dB up to 22.5 GHz ≥ 12 dB up to 40 GHz
Insertion loss		according Multiflex 53-02
Phase match		+/– 2 ps

Mechanical data (typical)	Testing condition	Requirements
Mating force (per single channel)		max. 3.4 N (typical 1.1 N)
Demating force (per single channel)		max. 3.4 N (typical 1.1 N)
Number of matings	MIL-PRF-39012, paragraph 4.7.12	≥ 500
Pitch centre-to-centre		4 mm (0.157 in.)

Environmental data (typical)	Testing condition	Requirements
Temperature range		–55 °C ... 85 °C / –67 °F ... 185 °F
Thermal aging (mated condition)	IEC 60068-2-2, test B	120 °C/260 h
Change of temperature	IEC 60068-2-14, test na	assembly: –55°C ... 85°C / –67°F ...185 °F PCB: –55°C ... 85°C / –67°F ...185 °F
Vibration	IEC 60068-2-6	on request
Mechanical shock (transport)	MIL-STD-202, method 213, condition I	100 g/6 ms
Damp heat steady state	IEC 60068-2-78, test ca	40 °C (104 °F)/humidity 93 %/96 h
2011/65/EU (RoHS)		compliant
2006/1907/EC (REACH)		compliant

Material data cable connector	Material	Coating
Center contact	copper beryllium	SUCOPRO® gold plating
Outer contact	brass	SUCOPRO® gold plating
Body	aluminium	black anodised
Insulator	PEEK	n/a

Material data PCB connector	Material	Coating
Center contact	copper beryllium	SUCOPRO® gold plating
Outer contact	BZ4	SUCOPRO® gold plating
Body	brass	SUCOPRO® gold plating
Insulator	PEEK	n/a

Performance values are typical for the connector interface. Individual component or connector performance may vary depending on the connector design, attachment (e.g. cable, PCB) or application. For detailed specifications please refer to the specific data sheets on our website www.hubersuhner.com.

L'IMPULSION | Retrouvez nous sur www.limpulsion.fr

MXP40 – PCB connectors

- Pitch 4 mm (0.16")
- Via-in-pad capable
- 0.7 mm (0.028") pin size allows easy matching to smallest trace width
- SMD technology – ground pins for better mechanical stability of solder joint

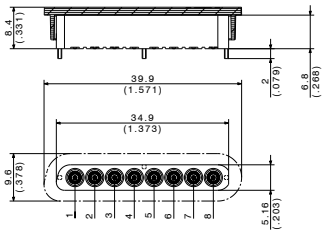



Type 1×8 ganged	Item no.	Packaging	Notes
1×8A_81_MXP-S50-0-1/111_NE	84091435	tape	asymmetric design (keyed)

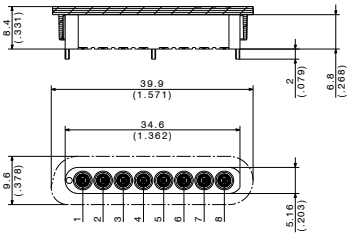



Type 1×8 ganged	Item no.	Packaging	Notes
1×8A_81_MXP-S50-0-2/111_NE	84091436	tape	symmetric design (non keyed)

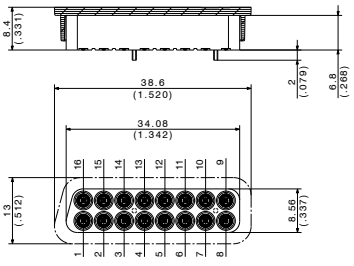

Fig. 1

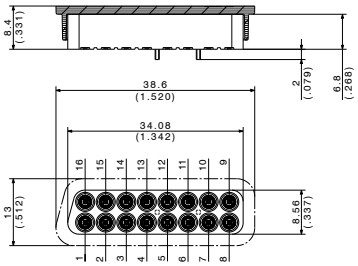

Fig. 2

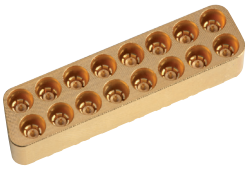

Type 2×8 ganged	Item no.	Packaging	Notes	Fig.
2×8A_81_MXP-S50-0-1/111_NE	84072058	tape	asymmetric design (keyed)	1
2×8A_81_MXP-S50-0-3/111_NE	85013397	tape	asymmetric design (keyed) optimised grounding pin layout for differential pair routing	2

Cable groups see page 32 | Assembly tools see page 531 | Mounting holes/PCB layouts see page 561

L'IMPULSION
Retrouvez nous sur
www.limpulsion.fr

MXP40 – breakout to SK

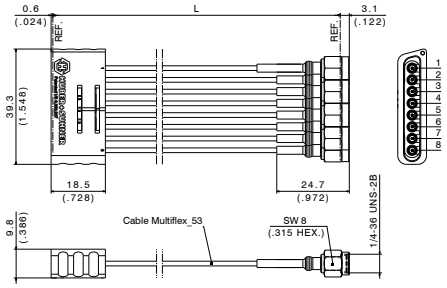



Type 1×8 ganged	Item no.	Length	Notes
MF53/1×8A_21MXP/11SK/152	84097196	152 mm (6″)	single channels numbered
MF53/1×8A_21MXP/11SK/229	84099600	229 mm (9″)	
MF53/1×8A_21MXP/11SK/305	84099607	305 mm (12″)	
MF53/1×8A_21MXP/11SK/610	84123646	610 mm (24″)	

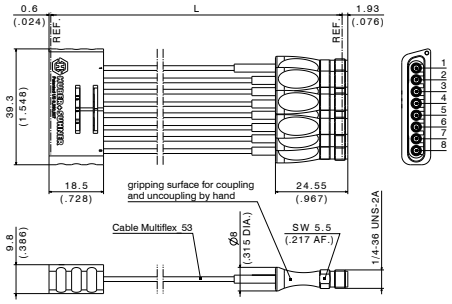

Type 1×8 ganged	Item no.	Length	Notes
MF53/1×8A_21MXP/21SK_ergo/152	84093980	152 mm (6″)	single channels numbered with ergo grip on SK (2.92 mm standard) side
MF53/1×8A_21MXP/21SK_ergo/229	84098899	229 mm (9″)	
MF53/1×8A_21MXP/21SK_ergo/305	84098900	305 mm (12″)	
MF53/1×8A_21MXP/21SK_ergo/610	85009273	610 mm (24″)	

Cable groups see page 32 | Assembly tools see page 531 | Mounting holes/PCB layouts see page 561

MXP40 – breakout to SK

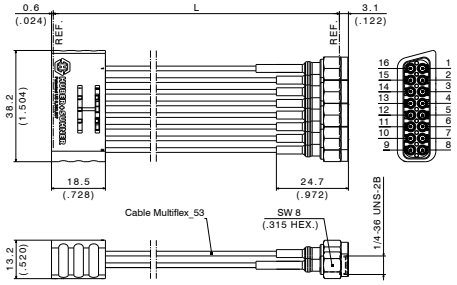



Type 2×8 ganged	Item no.	Length	Notes
MF53/2×8A_21MXP/11SK/152	84088950	152 mm (6″)	single channels numbered
MF53/2×8A_21MXP/11SK/229	84098901	229 mm (9″)	
MF53/2×8A_21MXP/11SK/305	84088954	305 mm (12″)	
MF53/2×8A_21MXP/11SK/610	84089090	610 mm (24″)	

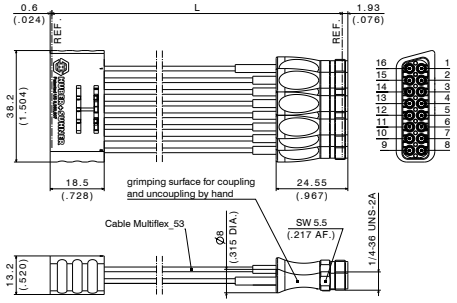

Type 2×8 ganged	Item no.	Length	Notes
MF53/2×8A_21MXP/21SK_ergo/152	84093901	152 mm (6″)	single channels numbered with ergo grip on SK (2.92 mm standard) side
MF53/2×8A_21MXP/21SK_ergo/229	84098908	229 mm (9″)	
MF53/2×8A_21MXP/21SK_ergo/305	84098902	305 mm (12″)	
MF53/2×8A_21MXP/21SK_ergo/610	85009286	610 mm (24″)	

Cable groups see page 32 | Assembly tools see page 531 | Mounting holes/PCB layouts see page 561

L'IMPULSION
Retrouvez nous sur
www.limpulsion.fr

MXP18 – 18 GHz multicoax solution

Key features

- Operating range at up to 18 GHz
- Standard absolute phase matching down to ± 2 ps
- 4 mm (0.157 inch) pitch centre-to-centre
- Slide-on mounting – no threading
- Highly flexible and ultra stable Multiflex cable
- Extensive technical support

Benefits

- **Space saving**
  Due to the dense interface pitch, the PCB connectors take up less space on boards. This is advantageous, as expensive high-performance board material is essential for good signal integrity at high data rates.
- **Shorter transmission lines**
  The compact design of the PCB connector allows it to be positioned directly adjacent to the DUT/chip. This helps to keep the transmission lines on the board short and the losses low.
- **Reliable push-on mating**
  Thanks to the revolutionary slide-on interface design, assemblies can be replugged quickly and easily, while guaranteeing stable electrical values even after numerous mating cycles.
- **Overall cost savings and service benefits**
  Reduced cost of ownership compared to single interfaces thanks to lower outlay for PCB population and channel handling. 3D files, modelling data and customised footprints are free of charge.

Comprehensive range of standard products (1×8 and 2×8 ganged systems)

- 1×8 and 2×8 breakout assemblies MXP-to-SMA
- Standardised SUCOFLEX assembly lengths with different classes of phase matching

L'IMPULSION | Retrouvez nous sur www.limpulsion.fr

MXP18 – technical data

Electrical data (typical)	Testing condition	Performance
Impedance		50 Ω
Interface frequency max.		18 GHz
Return loss	gated measurement: cable connector/ PCB transition PCB: Rogers RO3003 cable: Multiflex 53-02	≥ 20 dB up to 18 GHz
Insertion loss		according Multiflex 53-02
Phase match		+/– 2 ps

Mechanical data (typical)	Testing condition	Requirements
Mating force (per single channel)		max. 3.4 N (typical 1.1 N)
Demating force (per single channel)		max. 3.4 N (typical 1.1 N)
Number of matings	MIL-PRF-39012, paragraph 4.7.12	≥ 500
Pitch centre-to-centre		4 mm (0.157 in.)

Environmental data (typical)	Testing condition	Requirements
Temperature range		–55 °C ... 85 °C/–67 °F ... 185 °F
Thermal aging (mated condition)	IEC 60068-2-2, test B	120 °C/260 h
Change of temperature	IEC 60068-2-14, test na	assembly: –55 °C ... 85 °C/–67 °F ...185 °F PCB: –55 °C ... 85 °C/–67 °F ...185 °F
Vibration	IEC 60068-2-6	on request
Mechanical shock (transport)	MIL-STD-202, method 213, condition I	100 g/6 ms
Damp heat steady state	IEC 60068-2-78, test ca	40 °C (104 °F)/humidity 93 %/96 h
2011/65/EU (RoHS)		compliant
2006/1907/EC (REACH)		compliant

Material data cable connector	Material	Coating
Center contact	copper beryllium	SUCOPRO® gold plating
Outer contact	brass	SUCOPRO® gold plating
Body	aluminium	black anodised
Insulator	PEEK	n/a

Performance values are typical for the connector interface. Individual component or connector performance may vary depending on the connector design, attachment (e.g. cable, PCB) or application. For detailed specifications please refer to the specific data sheets on our website www.hubersuhner.com.

MXP18 – breakout to SMA

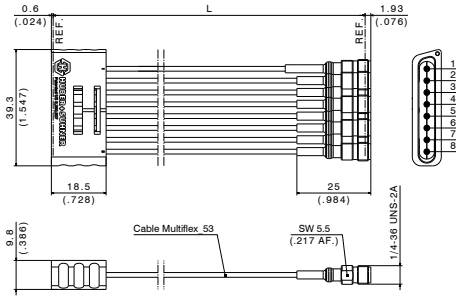



Type 1×8 ganged	Item no.	Length	Notes
MF53/1×8A_21MXP/21SMA/152	85014420	152 mm (6")	

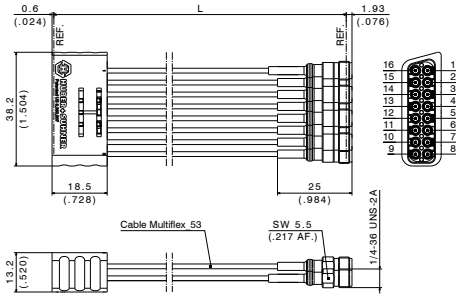

Type 2×8 ganged	Item no.	Length	Notes
MF53/2×8A_21MXP/21SMA/152	85022735	152 mm (6")	

Cable groups see page 32 Assembly tools see page 531 Mounting holes/PCB layouts see page 561

Adaptors

HUBER+SUHNER is manufacturing a wide range of adaptors in various configurations like within series or between series, straight or angled designs and some with panel mount features. They are classified according its typical intended applications of which each require its specific properties. There are four major groups which are identified by means of a color code in this catalogue: standard, precision, low passive intermodulation (PIM) and quick-mate adaptors.

Standard adaptors

Features

- Wide range of different configurations
- Appropriate materials

Benefits

- Most common interfaces available
- Accurate transitions
- Effective and reliable interconnection solutions

Precision adaptors

Features

- Precision interfaces
- Excellent electrical performance
- Premium base materials and platings

Benefits

- For precision laboratory measurements
- High repeatability and accuracy

PIM adaptors

Features

- Outstanding low intermodulation performance
- Excellent electrical contacts
- Non-magnetic materials

Benefits

- High reliability
- Repeatable intermodulation measurements

Quick-mate adaptors

Features

- Adaptors with slide-on coupling mechanism
- High abrasion resistance thanks SUCOPRO® gold plating

Benefits

- Easy coupling and decoupling
- Fast and reliable measurements
- Longest lifetime

Adaptor connector matching matrix

	AS12	AS16	BMA	BNC	MBX	MCX	MFBX	MMBX	MMCX	MMPX	N	NEX10	PC1.0	PC1.85	PC2.4	SK (2.92)
AS12																
AS16																
BMA																
BNC				94		96			99		101					
MBX																
MCX				96		151					156					
MFBX																
MMBX																
MMCX				99					229							
MMPX													256	257		259
N				101		156					276	277			280	
NEX10											277					
PC1.0										256			319			
PC1.85										257				339		
PC2.4											280					359
SK (2.92)										259					359	376
PC3.5	17					162					282	303				
PC7											283					
QLA				109							284					
QMA											285					
QN											286					
SMA		53	83	112	140	167	193	218	242		287					
SMB				113							288					
SMC				114							289					
SMP																385
SMPM																386
SMPM-T																387
SSMA																
TNC				119				225			294					
4.1/9.5											295					
4.3-10											296	317				
7/16											297	318				

How to find an adaptor

The interface pairing of an adaptor can be found in the matrix above. The various interface services are listed in the first column and row. The matrix number is the intercept point of two interfaces (e.g. 25 for BNC to BNC). The matrix number can be found in the upper left corner of the detail adaptors information in the following pages. The adaptors are sorted by this matrix number in ascending order. Consequently all BNC to BNC adaptors have the matrix number 25 and are in immediate succession. If the adaptor consists of two different interfaces the matrix number can be found either by following the row and then the column or vice versa. For example row MCX and column BNC leads to 27 as well as row BNC and column MCX.
If there is no number in an intercept point there are no adaptors for this connector paring available.

Tracking examples

Interface pairing	matrix number
BNC to BNC	25
BNC to MCX and MCX to BNC	27

	BMA	BNC	MBX	MCX
BMA				
BNC		25		27
MBX				
MCX		27		70

L'IMPULSION
Retrouvez nous sur
www.limpulsion.fr

PC3.5	PC7	QLA	QMA	QN	SMA	SMB	SMC	SMP	SMPM	SMPM-T	SSMA	TNC	4.1/9.5	4.3-10	7/16	
17																AS12
					53											AS16
					83											BMA
		109			112	113	114					119				BNC
					140											MBX
162					167											MCX
					193											MFBX
					218							225				MMBX
					242											MMCX
																MMPX
282	283	284	285	286	287	288	289					294	295	296	297	N
303														317	318	NEX10
																PC1.0
																PC1.85
																PC2.4
								385	386	387						SK (2.92)
393	394		396	397										407		PC3.5
394				412	413							420				PC7
		424														QLA
396			438		440											QMA
	412															QN
	413		440		463	464					469	470				SMA
					464	474										SMB
							484									SMC
																SMP
																SMPM
																SMPM-T
					469											SSMA
	420				470							519				TNC
															525	4.1/9.5
407															527	4.3-10
				462									525	527	528	7/16

Examples of detailed product information of specific adaptors

Header with colore code: Standard (grey)
Precision (red)
PIM (blue)
Quick-mate (green)

Matrix number and specific product ID

Details

- Interface series and gender
- Various characteristics
- Material/mechanical*
- VSWR

238	H+S type Item no.	33_PC7-QN-50-1/1-_NE 23032722
PC7 QN	jack (f)	
El. length	41.85 mm	
Material PC7 QN	brass/gold stainless steel	
VSWR	DC - 3 GHz 3 - 6 GHz 6 - 11 GHz	≤ 1.03 ≤ 1.05 ≤ typ. 1.12

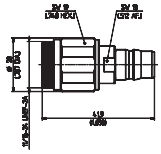

25	H+S type Item no.	37_BNC-75-0-1/133_NE 22541045
BNC	jack (f) 2 x	
Material Mounting hole Flange	brass/SUCO ML 10 4 threads	

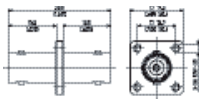

Notes

* Material and plating descriptions refer to the connector body or outer contact.

Used abbreviatons:

ML	mounting hole dimensions, see appendix
SUCO	SUCOPLATE® plating
SUPR	SUCOPRO®, gold plating
CuBe	copper beryllium alloy

L'IMPULSION
Retrouvez nous sur
www.limpulsion.fr

Adaptors

17	H+S type Item no.	29932-1 80320105
AS12 PC3.5	plug (m) jack (f)	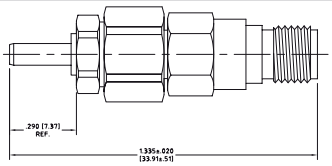
Material AS12 PC3.5	 brass/nickel stainless steel (passivated)	
VSWR	DC to 12.4 GHz	≤ 1.20

53	H+S type Item no.	29557-4 80318451
SMA AS16	jack (f) plug (m)	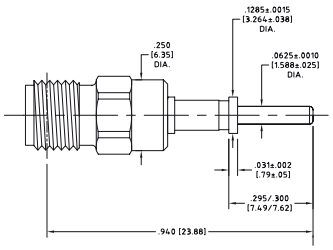
Material SMA AS16	 stainless steel (passivated) CuBe/gold	
VSWR	DC to 2 GHz	≤ 1.22

17	H+S type Item no.	29932-2 80320106
AS12 PC3.5	jack (f) jack (f)	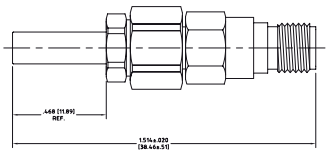
Material AS12 PC3.5	 brass/nickel stainless steel (passivated)	
VSWR	DC to 12.4 GHz	≤ 1.20

53	H+S type Item no.	29557-5 80318453
SMA AS16	jack (f) jack (f)	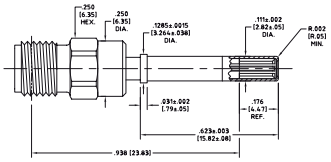
Material SMA AS16	 stainless steel (passivated) CuBe/gold	
VSWR	DC to 2 GHz	≤ 1.22

17	H+S type Item no.	29932-3 80360204
AS12 PC3.5	jack (f) plug (m)	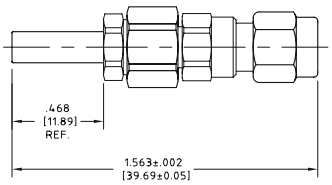
Material AS12 PC3.5	 brass/nickel stainless steel (passivated)	
VSWR	DC to 12.4 GHz	≤ 1.20

83	H+S type Item no.	31_BMA-SMA_50-1/1-9_UE 22645642
BMA SMA	jack (f) jack (f)	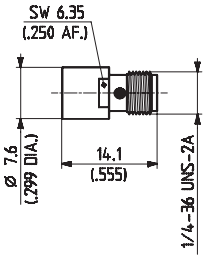
Material	stainless steel	
VSWR	DC to 9 GHz 9 to 18 GHz	≤ 1.04 + 0.02 • f (GHz) ≤ 1.22

17	H+S type Item no.	29932-4 80360205
AS12 PC3.5	plug (m) plug (m)	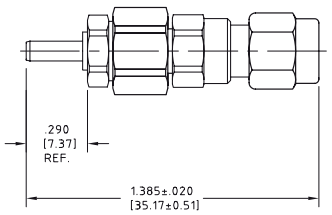
Material AS12 PC3.5	 brass/nickel stainless steel (passivated)	
VSWR	DC to 12.4 GHz	≤ 1.20

83	H+S type Item no.	32_BMA-SMA-50-1/199_UE 22645643
BMA SMA	plug (m) plug (m)	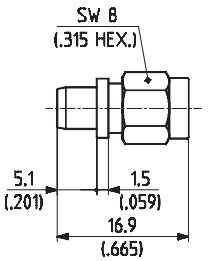
Material	stainless steel	
VSWR	DC to 9 GHz 9 to 18 GHz	≤ 1.04 + 0.02 • f (GHz) ≤ 1.22

Introduction and general information on page 485 and 486/487.

Adaptors

83	H+S type Item no.	33_BMA-SMA-50-1/199_UE 22645644
BMA SMA	plug (m) jack (f)	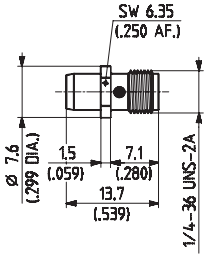
Material	stainless steel	
VSWR	DC to 18 GHz	≤ 1.06 + 0.009 • f (GHz)

83	H+S type Item no.	37_BMA-SMA-50-1/1--_UE 22645649
BMA SMA	jack (f) jack (f)	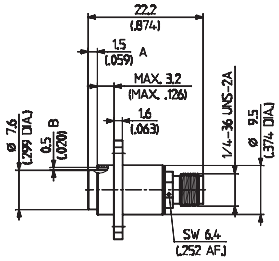
Material Mounting hole	stainless steel ML 58	
VSWR	DC to 9 GHz 9 to 18 GHz	≤ 1.07 + 0.017 • f (GHz) ≤ 1.22

83	H+S type Item no.	33_SMA-BMA-50-1/1-9_UE 22645645
SMA BMA	plug (m) jack (f)	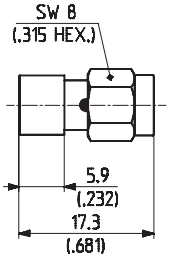
Material	stainless steel	
VSWR	DC to 18 GHz	≤ 1.06 + 0.009 • f (GHz)

94	H+S type Item no.	31_BNC-50-0-1/133_NE 22540540
BNC	jack (f) 2 ×	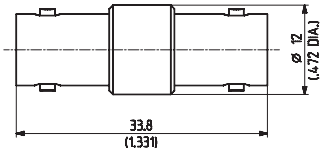
Material	brass/SUCO	
VSWR	DC to 4 GHz	≤ 1.06 + 0.04 • f (GHz)

83	H+S type Item no.	35_BMA-SMA-50-1/193_UE 22645647
BMA SMA	plug (m) plug (m)	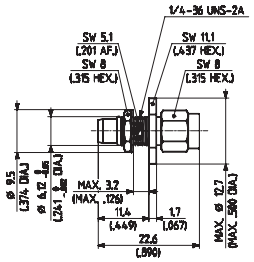
Material Mounting hole	stainless steel ML 56	
VSWR	DC to 18 GHz	≤ 1.07 + 0.02 • f (GHz)

94	H+S type Item no.	32_BNC-50-0-1/133_NE 22540565
BNC	plug (m) 2 ×	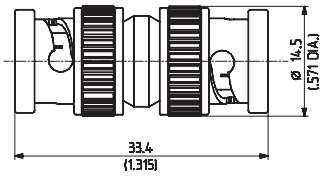
Material	brass/SUCO	
VSWR	DC to 4 GHz	≤ 1.06 + 0.04 • f (GHz)

83	H+S type Item no.	36_BMA-SMA-50-1/199_UE 22645651
BMA SMA	plug (m) jack (f)	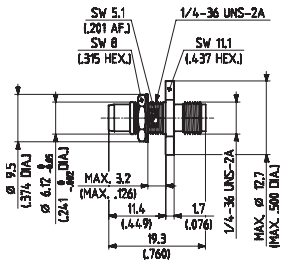
Material Mounting hole	stainless steel ML 56	
VSWR	DC to 18 GHz	≤ 1.03 + 0.015 • f (GHz)

94	H+S type Item no.	34_BNC-50-0-1/133_NE 22540627
BNC	jack (f) 2 ×	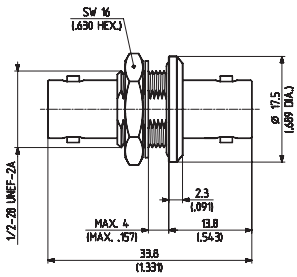
Material Mounting hole	brass/SUCO ML 4	
VSWR	DC to 1.5 GHz 1.5 to 4 GHz	≤ 1.04 ≤ 1.08 + 0.10 • f (GHz)

Introduction and general information on page 485 and 486/487.

L'IMPULSION
Retrouvez nous sur
www.limpulsion.fr

Adaptors

94	H+S type Item no.	34_BNC-50-0-2/133_NE 22540629
BNC	jack (f) 2 ×	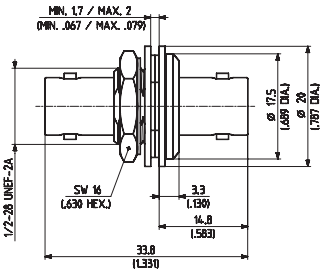
For insulated mounting		
Material Mounting hole	brass/SUCO ML 22	
VSWR	DC to 1.5 GHz 1.5 to 4 GHz	≤ 1.04 ≤ 1.08 + 0.10 • f (GHz)

94	H+S type Item no.	43_BNC-50-0-1/133_NE 22540644
BNC	jack (f) 2 × plug (m) 1 ×	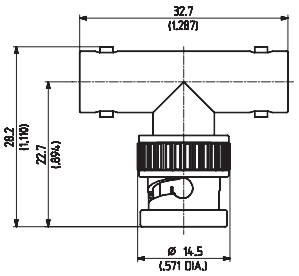
Material	brass/SUCO	

94	H+S type Item no.	34_BNC-50-0-6/100_NE 22540631
BNC	jack (f) 2 ×	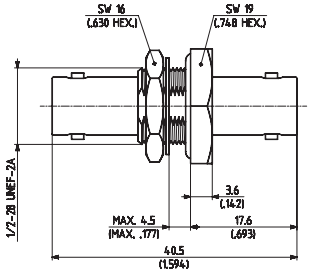
Hermetic sealed		
Material Mounting hole	CuBe/silver ML 4	
VSWR	DC to 4 GHz	≤ 1.43

94	H+S type Item no.	45_BNC-50-0-2/133_NE 22652370
BNC	jack (f) 2 × plug (m) 1 ×	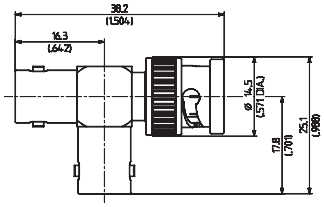
Material	brass/SUCO	

94	H+S type Item no.	37_BNC-50-0-1/133_NE 22540635
BNC	jack (f) 2 ×	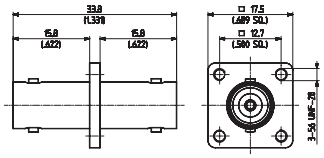
Material Mounting hole	brass/SUCO ML 10	
VSWR	DC to 4 GHz	≤ 1.06 + 0.04 • f (GHz)

94	H+S type Item no.	46_BNC-50-0-1/133_NE 22540649
BNC	jack (f) 3 ×	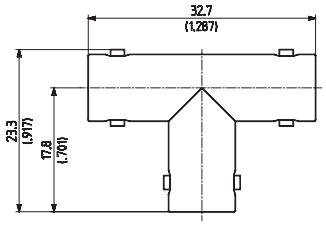
Material	brass/SUCO	

94	H+S type Item no.	37_BNC-50-0-2/133_NE 22540638
BNC	jack (f) 2 ×	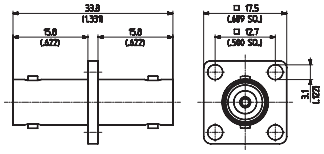
Material Mounting hole	brass/SUCO ML 10	
VSWR	DC to 4 GHz	≤ 1.06 + 0.04 • f (GHz)

94	H+S type Item no.	53_BNC-50-0-1/133_NE 22540657
BNC	plug (m) 1 × jack (f) 1 ×	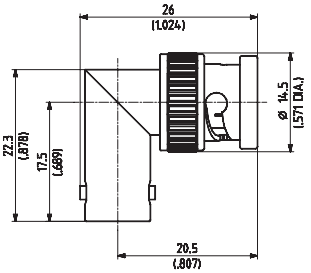
Material	brass/SUCO	
VSWR	DC to 4 GHz	≤ 1.06 + 0.04 • f (GHz)

Introduction and general information on page 485 and 486/487.

L'IMPULSION
Retrouvez nous sur
www.limpulsion.fr

Adaptors

94	H+S type Item no.	31_BNC-75-0-1/133_NE 22541003
BNC	jack (f) 2 ×	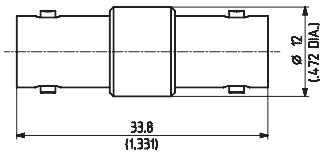
Material	brass/SUCO	

94	H+S type Item no.	34_BNC-75-0-2/133_NE 22541042
BNC	jack (f) 2 ×	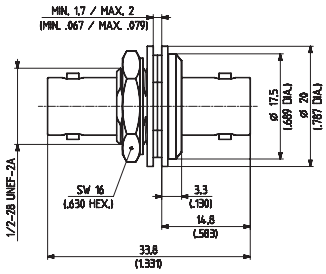
For insulated mounting		
Material Mounting hole	brass/SUCO ML 22	

94	H+S type Item no.	31_BNC-75-0-2/133_NE 84119590
BNC	jack (f) 2 ×	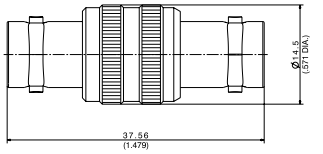
Material	brass/SUCO	

94	H+S type Item no.	34_BNC-75-0-5/133_NE 84095130
BNC	jack (f) 2 ×	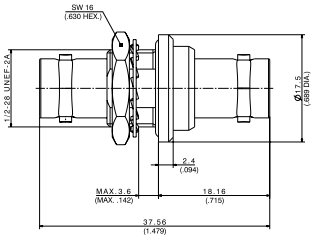
Material Mounting hole	brass/SUCO ML 4	

94	H+S type Item no.	32_BNC-75-0-1/133_NE 22541016
BNC	plug (m) 2 ×	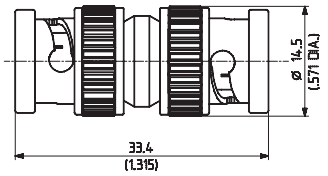
Material	brass/SUCO	

94	H+S type Item no.	37_BNC-75-0-1/133_NE 22541045
BNC	jack (f) 2 ×	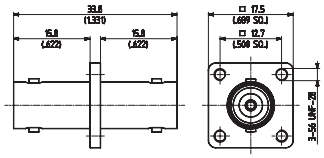
Material Mounting hole Flange	brass/SUCO ML 10 4 threads	

94	H+S type Item no.	34_BNC-75-0-1/133_NE 22541040
BNC	jack (f) 2 ×	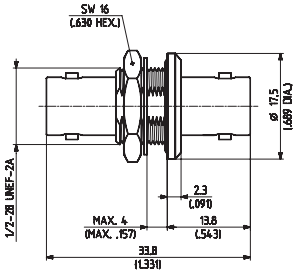
Material Mounting hole	brass/SUCO ML 4	

94	H+S type Item no.	37_BNC-75-0-2/133_NE 22541047
BNC	jack (f) 2 ×	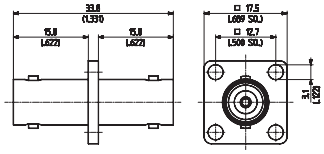
Material Mounting hole Flange	brass/SUCO ML 10 4 holes	

Introduction and general information on page 485 and 486/487.

L'IMPULSION
Retrouvez nous sur
www.limpulsion.fr

Adaptors

94	H+S type Item no.	43_BNC-75-0-1/133_NE 22541049
BNC	jack (f) 2 × plug (m) 1 ×	
Material	brass/SUCO	

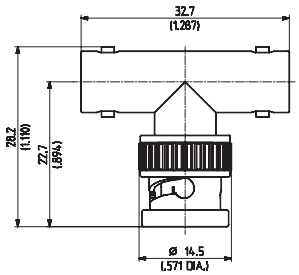

94	H+S type Item no.	45_BNC-75-0-1/133_NE 22541050
BNC	jack (f) 2 × plug (m) 1 ×	
Material	brass/SUCO	

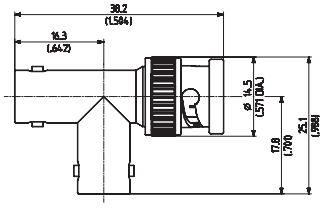

94	H+S type Item no.	46_BNC-75-0-1/133_NE 22541053
BNC	jack (f) 3 ×	
Material	brass/SUCO	

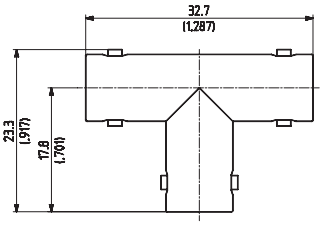

94	H+S type Item no.	53_BNC-75-0-1/133_NE 22541055
BNC	plug (m) jack (f)	
Material	brass/SUCO	

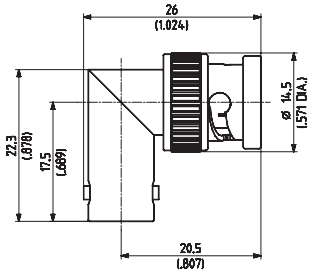

96	H+S type Item no.	31_BNC-MCX-50-1/1-_UE 22543639
BNC MCX	jack (f) jack (f)	
Material BNC MCX	 brass/SUCO brass/gold	
VSWR	DC to 2 GHz 2 to 4 GHz	≤ 1.03 + 0.13 • f (GHz) ≤ 1.29

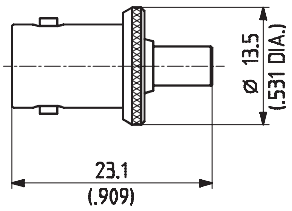

96	H+S type Item no.	33_BNC-MCX-50-1/1-_UE 22543829
BNC MCX	plug (m) jack (f)	
Material BNC MCX	 brass/SUCO brass/gold	
VSWR	DC to 4 GHz	≤ 1.20

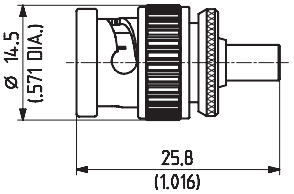

96	H+S type Item no.	33_MCX-BNC-50-1/1-_UE 22543585
MCX BNC	plug (m) jack (f)	
Material MCX BNC	 CuBe/gold brass/SUCO	
VSWR:	DC to 1 GHz 1 to 4 GHz	≤ 1.04 ≤ 1.29

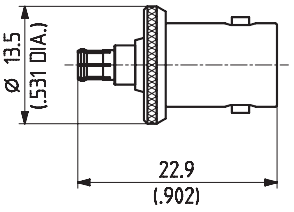

96	H+S type Item no.	34_BNC-MCX-50-2/133_UE 22644912
BNC MCX	jack (f) jack (f)	
Material Mounting hole	brass/SUCO ML 2	
VSWR	DC to 4 GHz	≤ 1.03 + 0.04 • f (GHz)

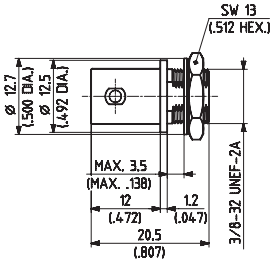

Introduction and general information on page 485 and 486/487.

Adaptors

99	H+S type Item no.	31_BNC-MMCX-50-1/1--_UE 22645963
BNC MMCX	jack (f) jack (f)	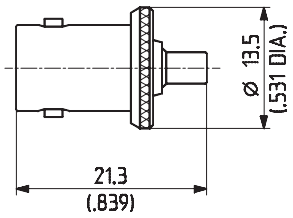
Material BNC MMCX	 brass/SUCO brass/gold	
VSWR	DC to 4 GHz	≤ 1.05 + 0.04 • f (GHz)

101	H+S type Item no.	31_BNC-N-50-1/133_UE 22540549
BNC N	jack (f) jack (f)	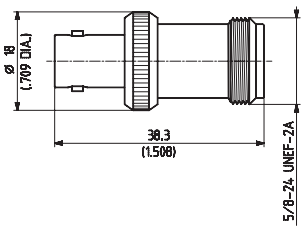
Material	brass/SUCO	
VSWR	DC to 4 GHz	≤ 1.22

99	H+S type Item no.	32_BNC-MMCX-50-1/1--_UE 22645959
BNC MMCX	plug (m) plug (m)	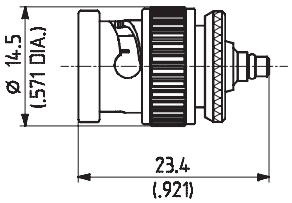
Material BNC MMCX	 brass/SUCO brass/gold	
VSWR	DC to 4 GHz	≤ 1.03 + 0.05 • f (GHz)

101	H+S type Item no.	31_BNC-N-50-51/1--_UE 22544049
BNC N	jack (f) jack (f)	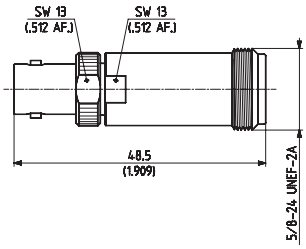
Material	stainless steel	
VSWR	DC to 4 GHz	≤ 1.05 + 0.01 • f (GHz)

99	H+S type Item no.	33_BNC-MMCX-50-1/1--_NE 22652907
BNC MMCX	plug (m) jack (f)	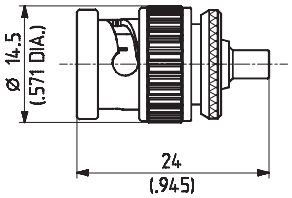
Material BNC MMCX	 brass/SUCO brass/gold	
VSWR	DC to 4 GHz	≤ 1.03 + 0.05 • f (GHz)

101	H+S type Item no.	32_BNC-N-50-1/133_UE 22540571
BNC N	plug (m) plug (m)	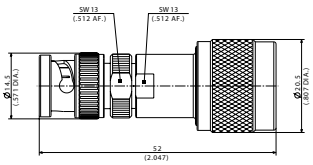
Material	brass/SUCO	
VSWR	DC to 4 GHz	≤ 1.06 + 0.4 • f (GHz)

99	H+S type Item no.	33_MMCX-BNC-50-1/111_UE 22645966
MMCX BNC	plug (m) jack (f)	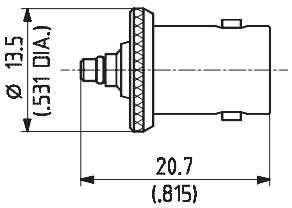
Material MMCX BNC	 brass/gold brass/SUCO	
VSWR	DC to 4 GHz	≤ 1.05 + 0.04 • f (GHz)

101	H+S type Item no.	32_BNC-N-50-51/1--_UE 22544051
BNC N	plug (m) plug (m)	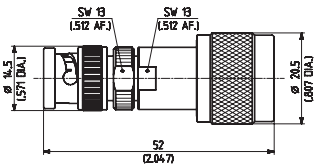
Material	stainless steel	
VSWR	DC to 4 GHz	≤ 1.05 + 0.01 • f (GHz)

Introduction and general information on page 485 and 486/487.

L'IMPULSION
Retrouvez nous sur
www.limpulsion.fr

Adaptors

101	H+S type Item no.	33_BNC-N-50-1/133_NE 22540608
BNC N	plug (m) jack (f)	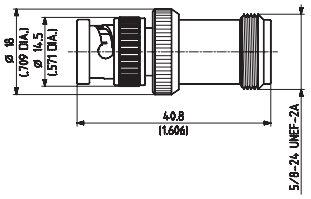
Material	brass/SUCO	
VSWR	DC to 4 GHz	≤ 1.04 + 0.025 • f (GHz)

101	H+S type Item no.	33_BNC-N-Q50-4/133_NE 23003163
BNC N	plug (m) quick-mate jack (f)	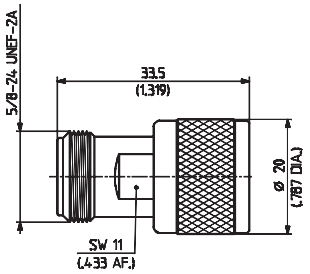
Material	brass/SUCO	
VSWR	DC to 4 GHz	≤ 1.07

101	H+S type Item no.	33_N-BNC-50-1/133_UE 22542414
N BNC	plug (m) jack (f)	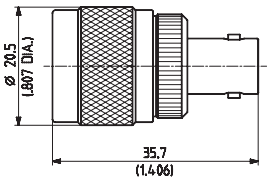
Material	brass/SUCO	
VSWR	DC to 4 GHz	≤ 1.22

101	H+S type Item no.	34_BNC-N-50-1/133_UE 22651055
BNC N	jack (f) jack (f)	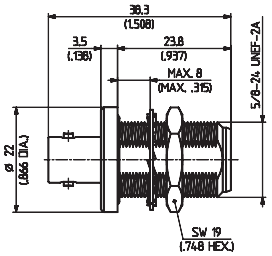
Material Mounting hole	brass/SUCO ML 12	
VSWR	DC to 4 GHz	≤ 1.22

101	H+S type Item no.	33_BNC-N-50-51/---_UE 22544052
BNC N	plug (m) jack (f)	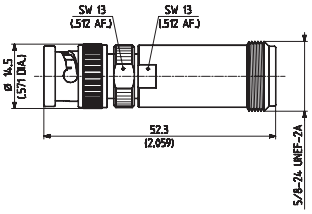
Material	stainless steel	
VSWR	DC to 4 GHz	≤ 1.05 + 0.01 • f (GHz)

101	H+S type Item no.	31_BNC-N-75-1/133_UE 22543640
BNC N	jack (f) jack (f)	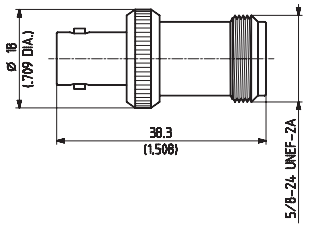
Material	brass/SUCO	

101	H+S type Item no.	33_N-BNC-50-51/1--_UE 22544050
N BNC	plug (m) jack (f)	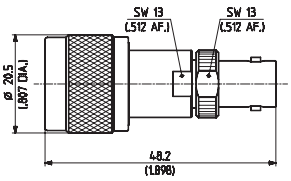
Material	stainless steel	
VSWR	DC to 4 GHz	≤ 1.05 + 0.01 • f (GHz)

101	H+S type Item no.	32_BNC-N-75-1/133_UE 22541022
BNC N	plug (m) plug (m)	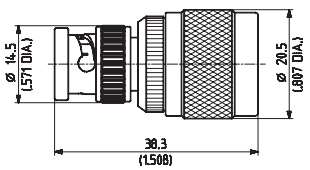
Material	brass/SUCO	

Introduction and general information on page 485 and 486/487.

Adaptors

101	H+S type Item no.	33_BNC-N-75-1/133_UE 22541034
BNC N	plug (m) jack (f)	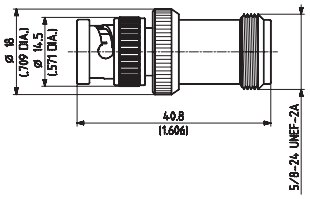
Material	brass/SUCO	

101	H+S type Item no.	33_N-BNC-75-1/133_UE 22542622
N BNC	plug (m) jack (f)	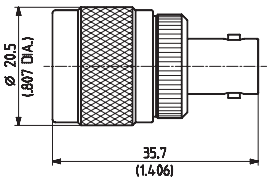
Material	brass/SUCO	

109	H+S type Item no.	33_BNC-QLA-01-1/1--_NE 22540624
BNC QLA	plug (m) jack (f)	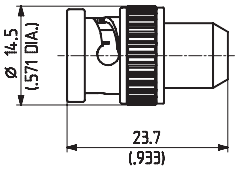
Material BNC QLA	 brass/SUCO brass/nickel	

109	H+S type Item no.	33_QLA-BNC-01-1/1--_NE 22640029
QLA BNC	plug (m) jack (f)	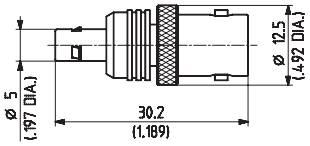
Material QLA BNC	 brass/nickel brass/SUCO	

109	H+S type Item no.	34_BNC-QLA-01-1/1--_UE 22640971
BNC QLA	jack (f) jack (f)	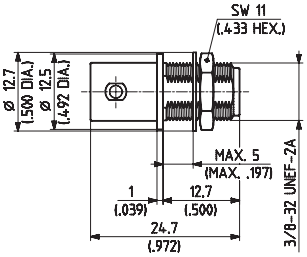
Material Mounting hole	brass/SUCO ML 2	

112	H+S type Item no.	31_BNC-SMA-50-1/1--_UE 22540551
BNC SMA	jack (f) jack (f)	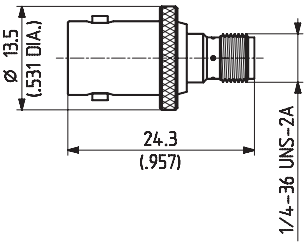
Material BNC SMA	 brass/SUCO CuBe/gold	
VSWR	DC to 4 GHz	≤ 1.06 + 0.04 • f (GHz)

112	H+S type Item no.	32_BNC-SMA-50-1/1--_UE 22540572
BNC SMA	plug (m) plug (m)	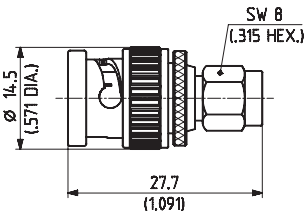
Material BNC SMA	 brass/SUCO CuBe/gold	
VSWR	DC to 4 GHz	≤ 1.03 + 0.03 • f (GHz)

112	H+S type Item no.	33_BNC-SMA-50-1/1--_UE 22540610
BNC SMA	plug (m) jack (f)	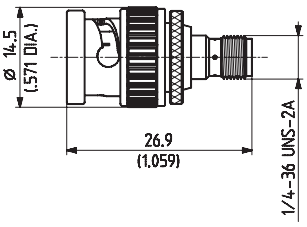
Material BNC SMA	 brass/SUCO CuBe/gold	
VSWR	DC to 4 GHz	≤ 1.03 + 0.03 • f (GHz)

Introduction and general information on page 485 and 486/487.

L'IMPULSION
Retrouvez nous sur
www.limpulsion.fr

Adaptors

112	H+S type Item no.	33_SMA-BNC-50-1/1--_NE 22640153
SMA BNC	plug (m) jack (f)	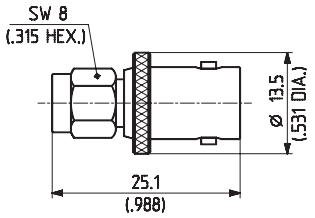
Material SMA BNC	 CuBe/gold brass/SUCO	
VSWR	DC to 4 GHz	≤ 1.05 – 0.037 • f (GHz)

113	H+S type Item no.	33_BNC-SMB-50-2/1--_UE 22540612
BNC SMB	plug (m) jack (f)	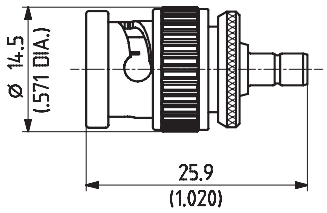
Material BNC SMB	 brass/SUCO brass/gold	
VSWR	DC to 4 GHz	≤ 1.06 + 0.04 • f (GHz)

112	H+S type Item no.	34_BNC-SMA-50-2/1--_UE 22651028
BNC SMA	jack (f) jack (f)	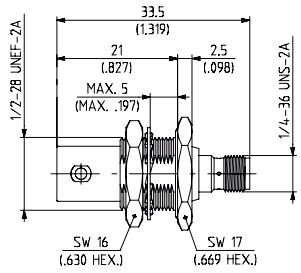
Material BNC SMA Mounting hole	 brass/SUCO CuBe/gold ML 4	
VSWR	DC to 4 GHz	≤ 1.06 – 0.03 • f (GHz)

113	H+S type Item no.	33_SMB-BNC-50-2/1--_UE 22640396
SMB BNC	plug (m) jack (f)	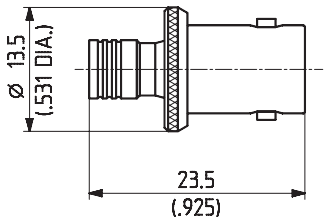
Material SMB BNC	 brass/gold brass/SUCO	
VSWR	DC to 4 GHz	≤ 1.05 + 0.075 • f (GHz)

113	H+S type Item no.	31_BNC-SMB-50-2/1--_UE 22540553
BNC SMB	jack (f) jack (f)	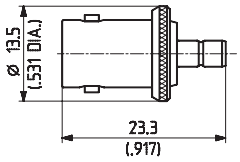
Material BNC SMB	 brass/SUCO brass/gold	
VSWR	DC to 2 GHz 2 to 4 GHz:	≤ 1.03 + 0.095 • f (GHz) ≤ 1.22

113	H+S type Item no.	34_BNC-SMB-50-1/133_NE 22659005
BNC SMB	jack (f) jack (f)	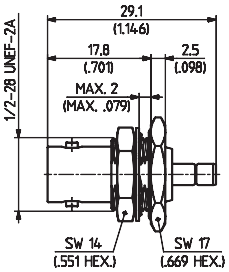
Material Mounting hole	brass/SUCO ML 4	
VSWR	DC to 2 GHz 2 to 4 GHz:	≤ 1.065 ≤ 1.33

113	H+S type Item no.	32_BNC-SMB-50-2/1--_UE 22540574
BNC SMB	plug (m) plug (m)	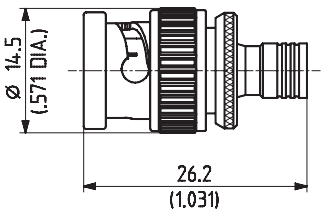
Material BNC SMB	 brass/SUCO brass/gold	
VSWR	DC to 4 GHz	≤ 1.12

114	H+S type Item no.	33_BNC-SMC-50-2/1--_NE 22540616
BNC SMC	plug (m) jack (f)	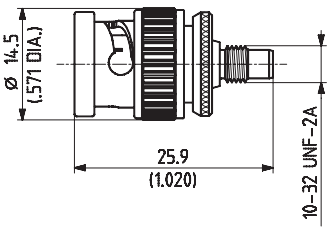
Material BNC SMC	 brass/SUCO brass/gold	
VSWR	DC to 4 GHz	≤ 1.22

Introduction and general information on page 485 and 486/487.

Adaptors

114	H+S type Item no.	33_SMC-BNC-50-2/1--_NE 22640405
SMC BNC	plug (m) jack (f)	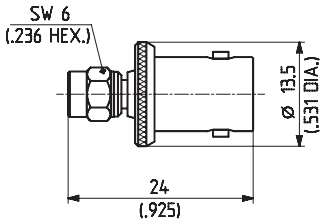
Material SMC BNC	 brass/gold brass/SUCO	
VSWR	DC to 2 GHz 2 to 4 GHz	≤ 1.03 + 0.095 • f (GHz) ≤ 1.22

119	H+S type Item no.	33_TNC-BNC-50-1/133_NE 22640631
TNC BNC	plug (m) jack (f)	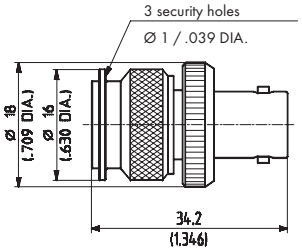
Material	brass/SUCO	
VSWR	DC to 4 GHz	≤ 1.22

119	H+S type Item no.	31_BNC-TNC-50-1/133_UE 22540559
BNC TNC	jack (f) jack (f)	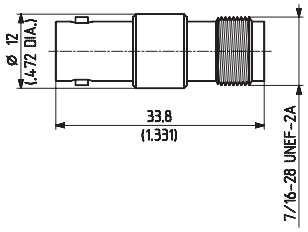
Material	brass/SUCO	
VSWR	DC to 4 GHz	≤ 1.22

119	H+S type Item no.	37_BNC-TNC-50-1/133_UE 22540639
BNC TNC	jack (f) jack (f)	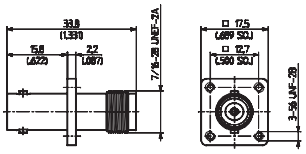
Material Mounting hole	brass/SUCO ML 10	
VSWR	DC to 4 GHz	≤ 1.22

119	H+S type Item no.	32_BNC-TNC-50-1/133_NE 22540582
BNC TNC	plug (m) plug (m)	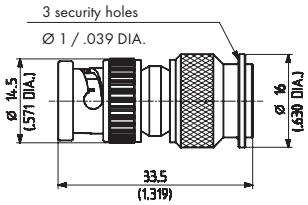
Material	brass/SUCO	
VSWR	DC to 4 GHz	≤ 1.22

140	H+S type Item no.	31_MBX-SMA-50-1/111_NE 84093625
MBX SMA	jack (f) jack (f)	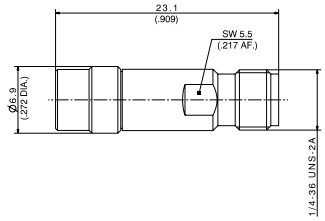
Material	brass/SUPR	
VSWR	DC to 6 GHz	≤ 1.083

119	H+S type Item no.	33_BNC-TNC-50-1/133_NE 22540614
BNC TNC	plug (m) jack (f)	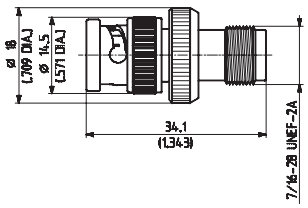
Material	brass/SUCO	
VSWR	DC to 4 GHz	≤ 1.22

140	H+S type Item no.	32_MBX-SMA-50-1/11-_NE 84093642
MBX SMA	plug (m) plug (m)	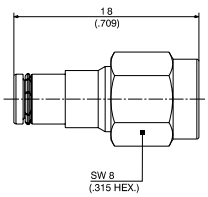
Material	brass/SUPR	
VSWR	DC to 6 GHz	≤ 1.083

Introduction and general information on page 485 and 486/487.

L'IMPULSION
Retrouvez nous sur
www.limpulsion.fr

Adaptors

140	H+S type Item no.	33_MBX-SMA-50-1/111_NE 84093656
MBX SMA	plug (m) jack (f)	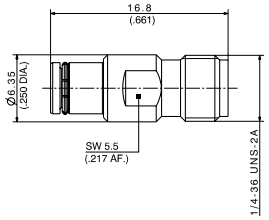
Material	brass/SUPR	
VSWR	DC to 6 GHz	≤ 1.083

140	H+S type Item no.	33_SMA-MBX-50-1/11-_NE 84093662
SMA MBX	plug (m) jack (f)	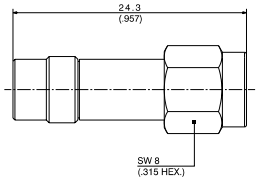
Material	brass/SUPR	
VSWR	DC to 6 GHz	≤ 1.083

151	H+S type Item no.	31_MCX-50-0-1/111_NE 22543558
MCX	jack (f) 2 ×	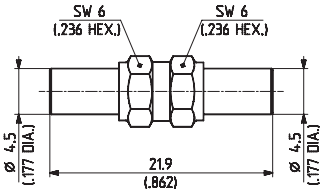
Material	brass/gold	
VSWR	DC to 1 GHz 1 to 6 GHz	≤ 1.05 ≤ 1.22

151	H+S type Item no.	32_MCX-50-0-3/111_NE 22653002
MCX	plug (m) 2 ×	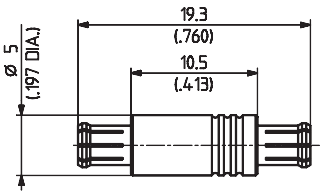
Material	brass/gold	
VSWR	DC to 1.5 GHz 1.5 to 6 GHz	≤ 1.06 ≤ 1.22

151	H+S type Item no.	34_MCX-50-0-2/111_NE 22649868
MCX	jack (f) 2 ×	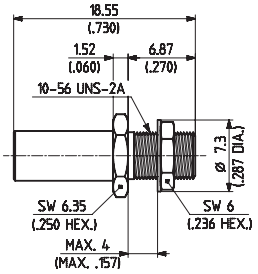
Material Mounting hole	brass/gold ML 35	
VSWR	DC to 1.5 GHz 1.5 to 6 GHz	≤ 1.06 ≤ 1.22

156	H+S type Item no.	31_MCX-N-50-1/1--_UE 22640172
MCX N	jack (f) jack (f)	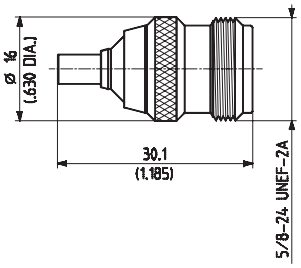
Material MCX N	 brass/gold brass/SUCO	
VSWR	DC to 6 GHz	≤ 1.03 + 0.05 • f (GHz)

156	H+S type Item no.	32_MCX-N-50-1/1--_UE 22543584
MCX N	plug (m) plug (m)	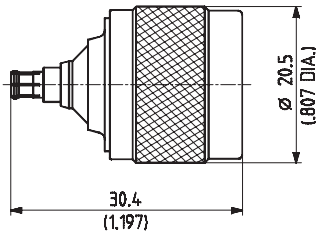
Material MCX N	 CuBe/gold brass/SUCO	
VSWR	DC to 6 GHz	≤ 1.03 + 0.05 • f (GHz)

156	H+S type Item no.	33_MCX-N-50-1/1--_UE 22543586
MCX N	plug (m) jack (f)	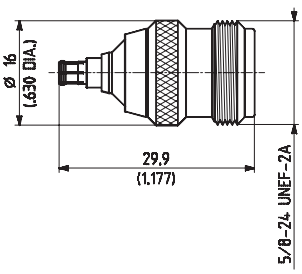
Material MCX N	 CuBe/gold brass/SUCO	
VSWR	DC to 6 GHz	≤ 1.03 + 0.035 • f (GHz)

Introduction and general information on page 485 and 486/487.

Adaptors

156	H+S type Item no.	33_N-MCX-50-1/1--_UE 22543796
N MCX	plug (m) jack (f)	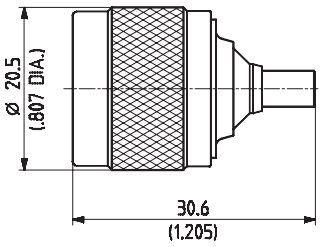
Material N MCX	 brass/SUCO brass/gold	
VSWR	DC to 6 GHz	≤ 1.03 + 0.03 • f (GHz)

156	H+S type Item no.	34_MCX-N-50-1/133_UE 22646217
MCX N	jack (f) jack (f)	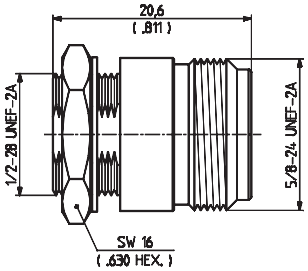
Material Mounting hole	brass/SUCO ML 4	
VSWR	DC to 6 GHz	≤ 1.08 + 0.02 • f (GHz)

156	H+S type Item no.	31_MCX-N-75-10/133_NE 22651488
MCX N	jack (f) jack (f)	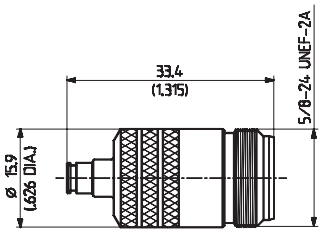
Material MCX N	 CuBe/SUCO brass/SUCO	
VSWR	DC to 3 GHz	≤ 1.07

156	H+S type Item no.	33_N-MCX-75-1/1--_NE 22649214
N MCX	plug (m) jack (f)	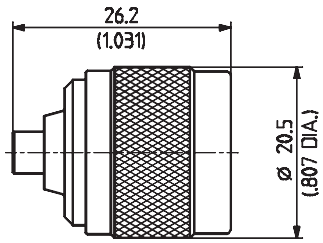
Material N MCX	 brass/SUCO brass/gold	

162	H+S type Item no.	31_MCX-PC35-50-1/111_NE 22651593
MCX PC3.5	jack (f) jack (f)	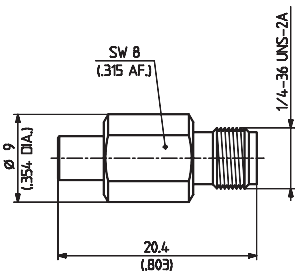
Material	CuBe/SUPR	
VSWR	DC to 3 GHz 3 to 6 GHz:	≤ 1.065 ≤ 1.09

162	H+S type Item no.	32_MCX-PC35-50-1/111_NE 22651600
MCX PC3.5	plug (m) plug (m)	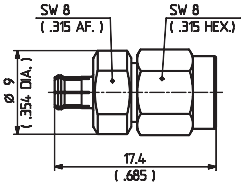
Material	CuBe/SUPR	
VSWR	DC to 3.5 GHz: 3.5 to 6 GHz	≤ 1.07 ≤ 1.09

162	H+S type Item no.	33_MCX-PC35-50-1/111_NE 22651594
MCX PC3.5	plug (m) jack (f)	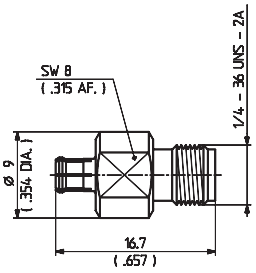
Material	CuBe/SUPR	
VSWR	DC to 3.5 GHz 3.5 to 6 GHz	≤ 1.065 ≤ 1.094

162	H+S type Item no.	33_PC35-MCX-50-1/111_NE 22651599
PC3.5 MCX	plug (m) jack (f)	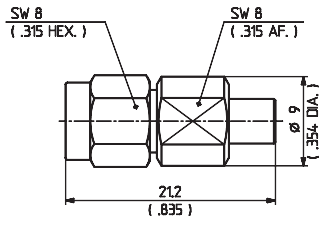
Material	CuBe/SUPR	
VSWR	DC to 3.5 GHz 3.5 to 6 GHz	≤ 1.065 ≤ 1.094

Introduction and general information on page 485 and 486/487.

Adaptors

167	H+S type Item no.	31_MCX-SMA-50-1/111_NE 22645485
MCX SMA	jack (f) jack (f)	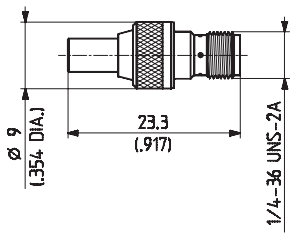
Material MCX SMA	 brass/gold CuBe/gold	
VSWR	DC to 6 GHz	≤ 1.03 + 0.03 • f (GHz)

167	H+S type Item no.	32_MCX-SMA-50-1/111_NE 22645486
MCX SMA	plug (m) plug (m)	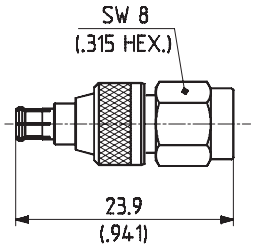
Material MCX SMA	 brass/gold CuBe/gold	
VSWR	DC to 6 GHz	≤ 1.03 + 0.03 • f (GHz)

167	H+S type Item no.	33_MCX-SMA-50-1/111_UE 22645487
MCX SMA	plug (m) jack (f)	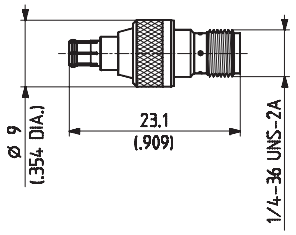
Material	CuBe/gold	
VSWR	DC to 6 GHz	≤ 1.03 + 0.03 • f (GHz)

167	H+S type Item no.	33_SMA-MCX-50-1/111_NE 22645488
SMA MCX	plug (m) jack (f)	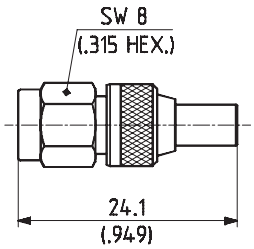
Material SMA MCX	 CuBe/gold brass/gold	
VSWR	DC to 6 GHz	≤ 1.03 + 0.03 • f (GHz)

193	H+S type Item no.	33_MFBX-SMA-50-1/111_NE 85008501
MFBX SMA	plug (m) jack (f)	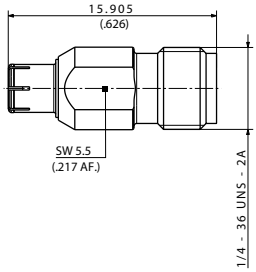
Material MFBX SMA	 CuBe/SUPR CuBe/SUPR	
VSWR	DC to 3.5 GHz	≤ 1.07

218	H+S type Item no.	31_MMBX-SMA-50-1/111_NE 23004933
MMBX SMA	jack (f) jack (f)	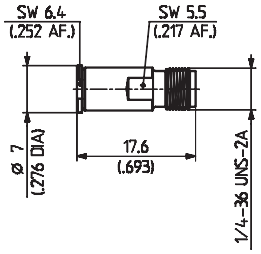
Material MMBX SMA	 brass/SUPR CuBe/SUPR	
VSWR	DC to 2.5 GHz 2.5 to 6 GHz 6 to 12.4 GHz	≤ 1.05 ≤ 1.06 ≤ 1.35

218	H+S type Item no.	32_MMBX-SMA-50-1/119_NE 23004934
MMBX SMA	plug (m) plug (m)	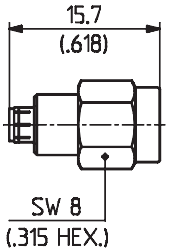
Material	CuBe/SUPR	
VSWR	DC to 2.5 GHz 2.5 to 6 GHz 6 to 12.4 GHz	≤ 1.05 ≤ 1.06 ≤ 1.35

218	H+S type Item no.	33_MMBX-SMA-50-1/111_NE 23004937
MMBX SMA	plug (m) jack (f)	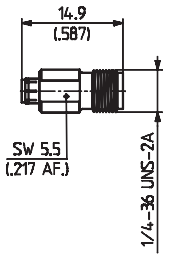
Material	CuBe/SUPR	
VSWR	DC to 2.5 GHz 2.5 to 6 GHz 6 to 12.4 GHz	≤ 1.05 ≤ 1.06 ≤ 1.35

Introduction and general information on page 485 and 486/487.

Adaptors

218	H+S type Item no.	33_SMA-MMBX-50-1/119_NE 23004935
SMA MMBX	plug (m) jack (f)	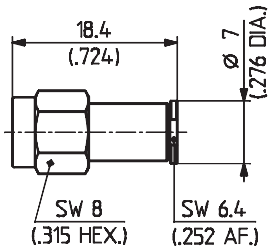
Material SMA MMBX	 CuBe/SUPR brass/SUPR	
VSWR	DC to 2.5 GHz 2.5 to 6 GHz 6 to 12.4 GHz	≤ 1.05 ≤ 1.06 ≤ 1.35

225	H+S type Item no.	34_MMBX-TNC-50-1/1-3_NE 23014297
MMBX TNC	jack (f) jack (f)	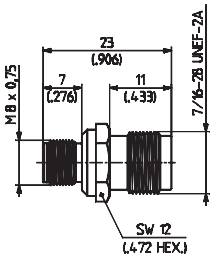
Material	brass/SUCO	
VSWR	DC to 5 GHz	≤ 1.3

229	H+S type Item no.	31_MMCX-50-0-1/111_OE 22645960
MMCX	jack (f) 2 ×	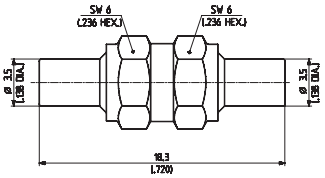
Material	brass/gold	
VSWR	DC to 3 GHz 3 to 6 GHz	≤ 1.10 ≤ 1.28

229	H+S type Item no.	34_MMCX-50-0-1/111_OE 22650516
MMCX	jack (f) 2 ×	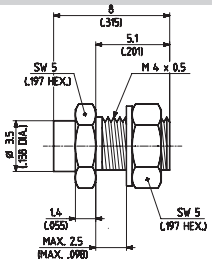
Material Mounting hole	brass/gold ML 88	
VSWR	DC to 1.5 GHz: 1.5 to 6 GHz	≤ 1.06 ≤ 1.22

242	H+S type Item no.	31_MMCX-SMA-50-1/111_OE 22645961
MMCX SMA	jack (f) jack (f)	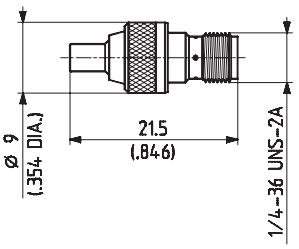
Material MMCX SMA	 brass/gold CuBe/SUPR	
VSWR	DC to 2.5 GHz 2.5 to 6 GHz	≤ 1.10 ≤ 1.18

141	H+S type Item no.	31_MMCX-SMA-50-2/111_NE 22658201
MMCX SMA	jack (f) jack (f)	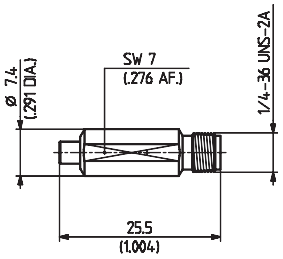
Material	CuBe/SUPR	
VSWR	DC to 3.5 GHz: 3.5 to 6 GHz	≤ 1.07 ≤ 1.09

242	H+S type Item no.	32_MMCX-SMA-50-1/111_OE 22645967
MMCX SMA	plug (m) plug (m)	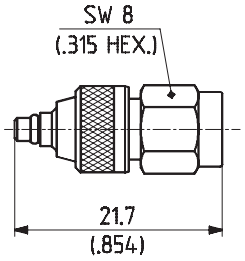
Material MMCX SMA	 brass/gold CuBe/gold	
VSWR	DC to 2.5 GHz 2.5 to 6 GHz	≤ 1.10 ≤ 1.18

242	H+S type Item no.	32_MMCX-SMA-50-2/111_NE 22658202
MMCX SMA	plug (m) plug (m)	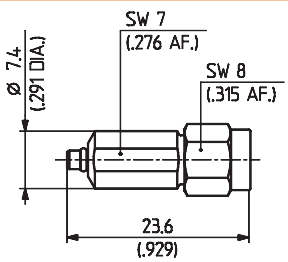
Material	CuBe/SUPR	
VSWR	DC to 3.5 GHz 3.5 to 6 GHz	≤ 1.07 ≤ 1.09

Introduction and general information on page 485 and 486/487.

L'IMPULSION
Retrouvez nous sur
www.limpulsion.fr

Adaptors

242	H+S type Item no.	33_MMCX-SMA-50-1/111_UE 22645970
MMCX SMA	plug (m) jack (f)	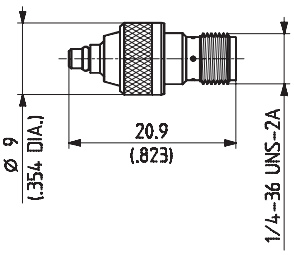
Material MMCX SMA	 brass/gold CuBe/gold	
VSWR	DC to 2.5 GHz 2.5 to 6 GHz	≤ 1.10 ≤ 1.18

242	H+S type Item no.	33_SMA-MMCX-50-1/111_NE 22645969
SMA MMCX	plug (m) jack (f)	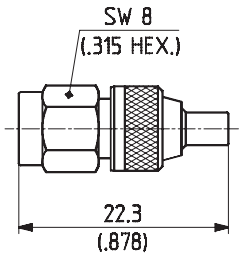
Material SMA MMCX	 CuBe/gold brass/gold	
VSWR	DC to 2.5 GHz 2.5 to 6 GHz	≤ 1.10 ≤ 1.18

242	H+S type Item no.	33_MMCX-SMA-50-2/111_NE 22658203
MMCX SMA	plug (m) jack (f)	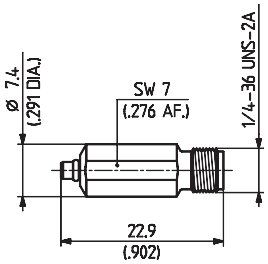
Material	CuBe/SUPR	
VSWR	DC to 3.5 GHz 3.5 to 6 GHz	≤ 1.065 ≤ 1.094

242	H+S type Item no.	33_SMA-MMCX-50-2/111_NE 22658204
SMA MMCX	plug (m) jack (f)	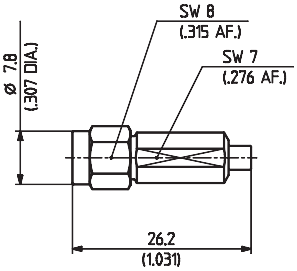
Material	CuBe/SUPR	
VSWR	DC to 3.5 GHz 3.5 to 6 GHz	≤ 1.065 ≤ 1.094

256	H+S type Item no.	33_MMPX-PC1-50-1/111_NE 85031764
MMPX PC1.0	plug (m) jack (f)	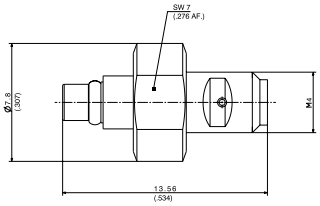
Material	CuBe/gold	
VSWR	DC to 20 GHz 20 to 50 GHz 50 to 80 GHz	≤ 1.119 ≤ 1.222 ≤ 1.671

257	H+S type Item no.	33_MMPX-PC185-50-2/1--_NE 84132754
MMPX PC1.85	plug (m) jack (f)	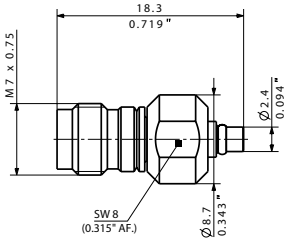
Material MMPX PC1.85	 CuBe/SUPR stainless steel	
VSWR	DC to 15 GHz 15 to 67 GHz	≤ 1.106 ≤ 1.173

257	H+S type Item no.	33_PC185-MMPX-50-2/199_NE 84132750
PC1.85 MMPX	plug (m) jack (f)	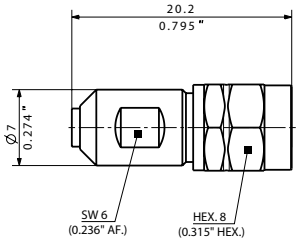
Material	stainless steel	
VSWR	DC to 15 GHz 15 to 67 GHz	≤ 1.106 ≤ 1.173

259	H+S type Item no.	33_MMPX-SK-50-1/199_NE 84071648
MMPX SK (2.92 mm)	plug (m) jack (f)	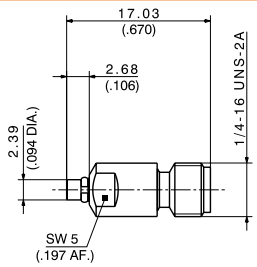
El. length	16.1 mm	
Material	stainless steel	
VSWR	DC to 15 GHz: 15 to 30 GHz 30 to 40 GHz	≤ 1.105 ≤ 1.152 ≤ 1.222

Introduction and general information on page 485 and 486/487.

L'IMPULSION | Retrouvez nous sur www.limpulsion.fr

Adaptors

259	H+S type	33_SK-MMPX-50-1/199_NE
	Item no.	84071696
SK (2.92 mm) MMPX	plug (m) jack (f)	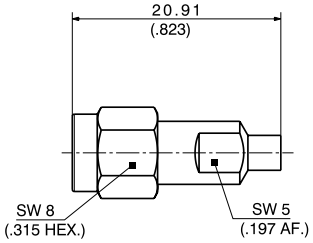
El. length	16.1 mm	
Material	stainless steel	
VSWR	DC to 15 GHz	≤ 1.105
	15 to 30 GHz	≤ 1.152
	30 to 40 GHz	≤ 1.222

276	H+S type	31_N-50-0-2/133_NE
	Item no.	22542382
N	jack (f) 2 ×	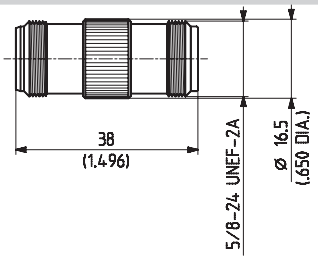
Material	brass/SUCO	
VSWR	DC to 2 GHz	≤ 1.07
	2 to 8 GHz	≤ 1.43
	8 to 12.4 GHz	≤ 1.92

276	H+S type	31_N-50-0-51/199_NE
	Item no.	22652112
N	jack (f) 2 ×	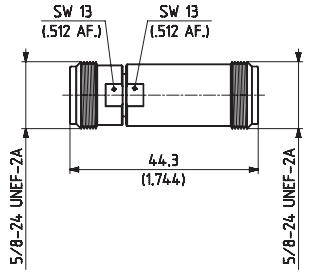
Material	stainless steel	
VSWR	DC to 18 GHz	≤ 1.03 + 0.01 • f (GHz)

276	H+S type	32_N-50-0-1/133_NE
	Item no.	22542398
N	plug (m) 2 ×	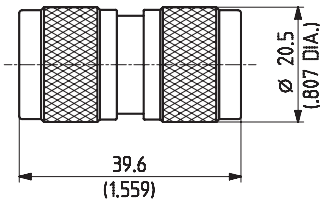
Material	brass/SUCO	
VSWR	DC to 9 GHz	≤ 1.06 + 0.04 • f (GHz)
	9 to 12 GHz	≤ 1.40

276	H+S type	32_N-50-0-51/193_NE
	Item no.	22652113
N	plug (m) 2 ×	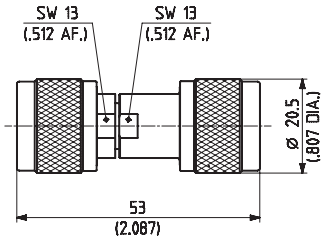
Material	stainless steel	
VSWR	DC to 18 GHz	≤ 1.03 + 0.01 • f (GHz)

276	H+S type	33_N-Q50-0-4/133_NE
	Item no.	22660297
N	plug (m) quick-mate jack (f)	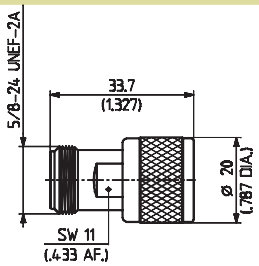
Material	brass/SUCO	
VSWR	DC to 5 GHz	≤ 1.07
	5 to 8 GHz	≤ 1.22
	8 to 11 GHz	≤ 1.28

276	H+S type	33_N-50-0-7/133_NE
	Item no.	23014355
N	plug (m) 1 × jack (f) 1 ×	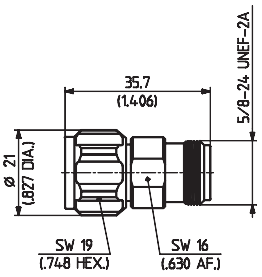
Material	brass/SUCO	
VSWR	DC to 18 GHz	≤ 1.03 + 0.05 • f (GHz)

276	H+S type	33_N-Q50-0-14/13-_NE
	Item no.	23003160
N	plug (m) quick-mate jack (f)	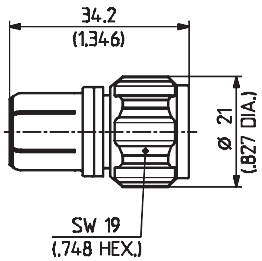
Material	brass/SUCO	
VSWR	DC to 4 GHz	≤ 1.12
	4 to 8 GHz	≤ 1.22

Introduction and general information on page 485 and 486/487.

L'IMPULSION
Retrouvez nous sur
www.limpulsion.fr

Adaptors

276	H+S type Item no.	33_N-50-0-51/193_NE 22652114
N	plug (m) jack (f)	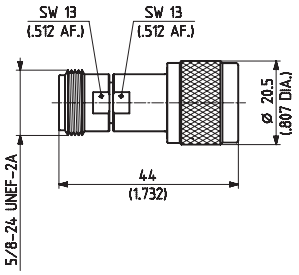
Material	stainless steel	
VSWR	DC to 18 GHz	≤ 1.03 + 0.01 • f (GHz)

276	H+S type Item no.	34_N-50-0-51/193_NE 22544593
N	jack (f) 2 ×	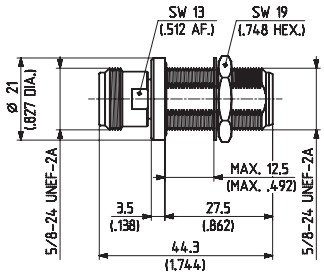
Material Mounting hole	stainless steel ML 12	
VSWR	DC to 18 GHz	≤ 1.03 + 0.01 • f (GHz)

276	H+S type Item no.	33_N-50-0-52/199_UE 22648921
N	plug (m) jack (f)	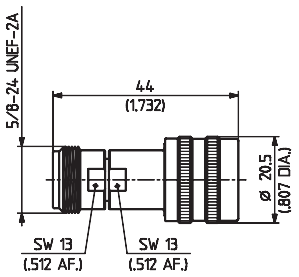
Quick-screw (male side)		
Material	stainless steel	
VSWR	DC to 18 GHz	≤ 1.03 + 0.01 • f (GHz)

276	H+S type Item no.	37_N-50-0-1/133_NE 22542437
N	jack (f) 2 ×	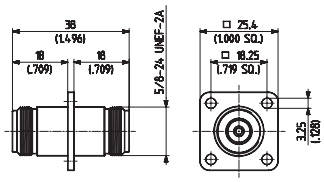
Material Mounting hole	brass/SUCO ML 14	
VSWR	DC to 12.4 GHz	≤ 1.19 + 0.06 • f (GHz)

276	H+S type Item no.	34_N-50-0-1/133_NE 22542435
N	jack (f) 2 ×	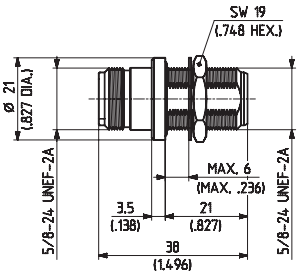
Material Mounting hole	brass/SUCO ML 12	
VSWR	DC to 12.4 GHz	≤ 1.06 + 0.17 • f (GHz)

276	H+S type Item no.	43_N-50-0-1/133_NE 22542442
N	jack (f) 2 × plug (m) 1 ×	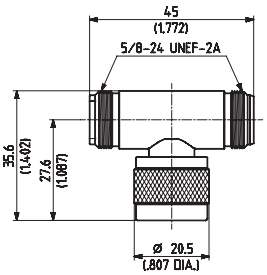
Material	brass/SUCO	

276	H+S type Item no.	34_N-50-0-3/133_NE 22642946
N	jack (f) 2 ×	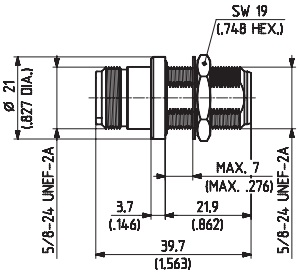
Hermetic sealed		
Material Mounting hole	brass/SUCO ML 12	
VSWR	DC to 11 GHz	≤ 1.08 + 0.13 • f (GHz)

276	H+S type Item no.	46_N-50-0-1/133_NE 22542445
N	jack (f) 3 ×	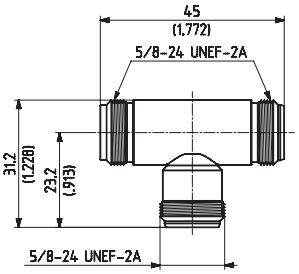
Material	brass/SUCO	

Introduction and general information on page 485 and 486/487.

Adaptors

276	H+S type Item no.	53_N-50-0-4/133_NE 22651447
N	plug (m) jack (f)	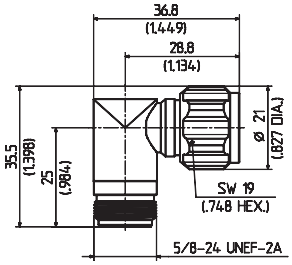
Material	brass/SUCO	
VSWR	DC to 2 GHz 2 to 6 GHz 6 to 8 GHz	≤ 1.08 ≤ 1.22 ≤ 1.29

276	H+S type Item no.	37_N-75-0-1/133_NE 22542633
N	jack (f) 2 ×	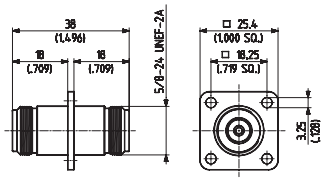
Material Mounting hole	brass/SUCO ML 14	

276	H+S type Item no.	31_N-75-0-2/133_NE 22542612
N	jack (f) 2 ×	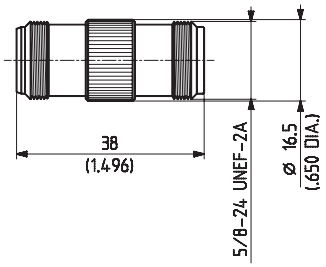
Material	brass/SUCO	

276	H+S type Item no.	53_N-75-0-4/133_NE 22651799
N	plug (m) jack (f)	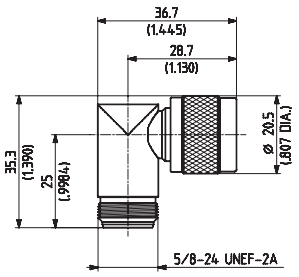
Material	brass/SUCO	

276	H+S type Item no.	32_N-75-0-1/133_NE 22542618
N	plug (m) 2 ×	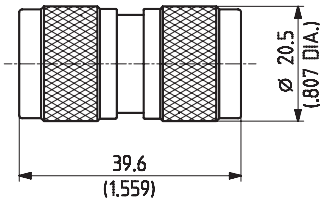
Material	brass/SUCO	

277	H+S type Item no.	33_NEX10-N-50-X1/1-3_NE 85095344
NEX10 N	plug (male) jack (female)	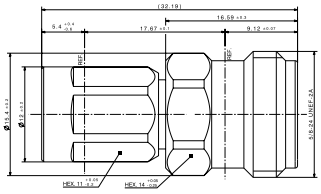
Material NEX10 N	 brass/SUCO brass/SUCO	

276	H+S type Item no.	34_N-75-0-1/133_NE 22542631
N	jack (f) 2 ×	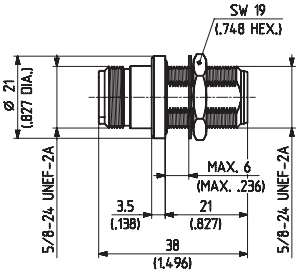
Material Mounting hole	brass/SUCO ML 12	

280	H+S type Item no.	33_PC24-N-50-1/199_UE 22650021
PC2.4 N	plug (m) jack (f)	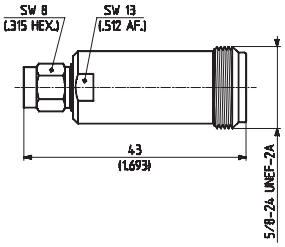
Material	stainless steel	
VSWR	DC to 10 GHz 10 to 18 GHz	≤ 1.05 ≤ 1.08

Introduction and general information on page 485 and 486/487.

L'IMPULSION
Retrouvez nous sur
www.limpulsion.fr

Adaptors

280	H+S type Item no.	33_N-PC24-50-1/199_UE 22649932
N PC2.4	plug (m) jack (f)	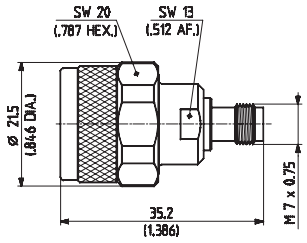
Material	stainless steel	
VSWR	DC to 10 GHz 10 to 18 GHz	≤ 1.05 ≤ 1.08

282	H+S type Item no.	31_N-PC35-50-1/1--_UE 22643960
N PC3.5	jack (f) jack (f)	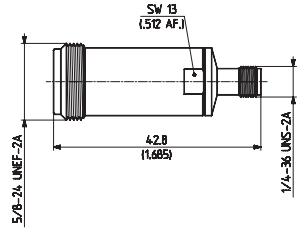
Material	stainless steel	
VSWR	DC to 12.4 GHz 12.4 to 18 GHz	≤ 1.10 ≤ 1.15

282	H+S type Item no.	32_N-PC35-50-1/1--_UE 22643957
N PC3.5	plug (m) plug (m)	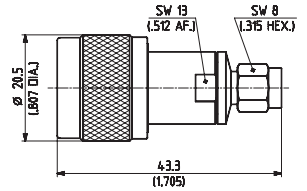
Material	stainless steel	
VSWR	DC to 12.4 GHz 12.4 to 18 GHz	≤ 1.10 ≤ 1.15

282	H+S type Item no.	33_N-PC35-50-1/1--_UE 22643959
N PC3.5	plug (m) jack (f)	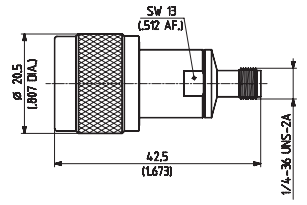
Material	stainless steel	
VSWR	DC to 12.4 GHz 12.4 to 18 GHz	≤ 1.10 ≤ 1.15

282	H+S type Item no.	33_PC35-N-50-1/1--_UE 22643958
PC3.5 N	plug (m) jack (f)	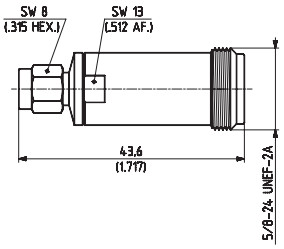
Material	stainless steel	
VSWR	DC to 12.4 GHz 12.4 to 18 GHz	≤ 1.10 ≤ 1.15

283	H+S type Item no.	32_N-PC7-50-1/1--_UE 22543571
N PC7	plug (m)	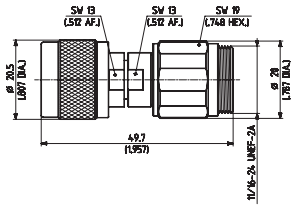
Material N PC7	 stainless steel brass/gold	
VSWR	DC to 18 GHz	≤ 1.02 + 0.002 • f (GHz)

283	H+S type Item no.	32_N-PC7-50-6/1--_NE 23032917
N PC7	plug (m)	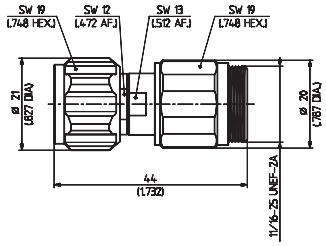
El. length	41.85 mm	
Material N PC7	 stainless steel brass/gold	
VSWR	DC to 3 GHz 3 to 6 GHz 6 to 11 GHz	≤ 1.03 ≤ 1.05 ≤ typ. 1.12

293	H+S type Item no.	33_PC7-N-50-1/1--_UE 22543547
PC7 N	jack (f)	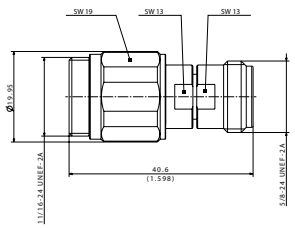
Material PC7 N	 brass/gold stainless steel	
VSWR	DC to 18 GHz	≤ 1.02 + 0.002 • f (GHz)

Introduction and general information on page 485 and 486/487.

Adaptors

283	H+S type Item no.	33_PC7-N-50-5/-33_NE 23004036
PC7 N	jack (f)	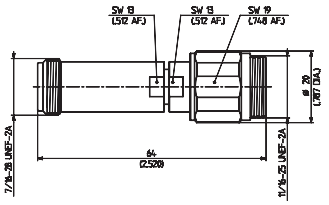
Material PC7 N	 brass/gold stainless steel	
VSWR	DC to 18 GHz	≤ 1.03 + 0.002 • f (GHz)

285	H+S type Item no.	33_QMA-N-50-1/133_NE 23023143
QMA N	plug (m) jack (f)	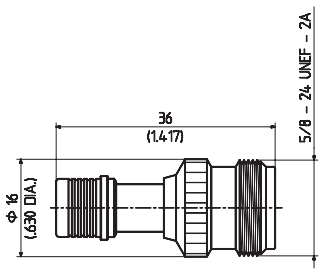
Material	brass/SUCO	
VSWR	DC to 6 GHz	≤ 1.04

283	H+S type Item no.	33_PC7-N-50-6/1--_NE 23032916
PC7 N	jack (f)	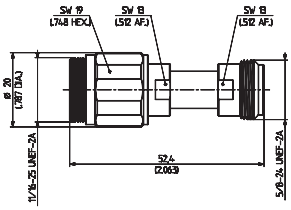
El. length	41.85 mm	
Material PC7 N	 brass/gold stainless steel	
VSWR	DC to 3 GHz 3 to 6 GHz 6 to 11 GHz	≤ 1.03 ≤ 1.05 ≤ typ. 1.12

285	H+S type Item no.	33_N-QMA-50-1/133_NE 23024265
N QMA	plug (m) jack (f)	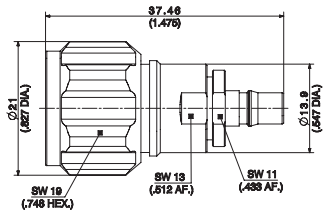
Material	brass/SUCO	
VSWR	DC to 6 GHz	≤ 1.04

284	H+S type Item no.	33_N-QLA-01-1/1--_NE 22542431
N QLA	plug (m) jack (f)	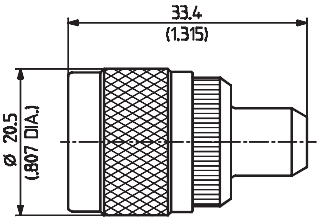
Material N QLA	 brass/SUCO brass/nickel	

286	H+S type Item no.	31_N-QN-50-1/133_NE 84016830
N QN	jack (f) jack (f)	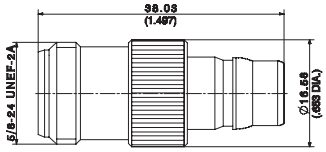
Material	brass/SUCO	
VSWR	DC to 2 GHz 2 to 6 GHz 6 to 11 GHz	≤ 1.05 ≤ 1.3 ≤ 1.5

285	H+S type Item no.	31_N-QMA-50-1/1--_NE 23027960
N QMA	jack (f) jack (f)	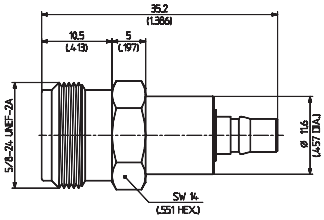
Material	stainless steel	
VSWR	DC to 2.5 GHz 2.5 to 6 GHz	≤ 1.036 ≤ 1.135

286	H+S type Item no.	32_N-QN-50-1/133_NE 23033962
N QN	plug (m) plug (m)	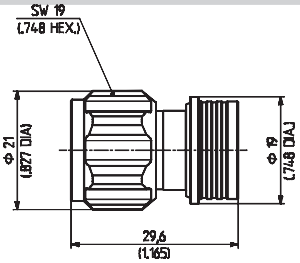
Material	brass/SUCO	
VSWR	DC to 4 GHz 4 to 8 GHz 8 to 10 GHz	≤ 1.035 ≤ 1.06 ≤ 1.22

Introduction and general information on page 485 and 486/487.

L'IMPULSION
Retrouvez nous sur
www.limpulsion.fr

Adaptors

286	H+S type Item no.	33_QN-N-50-1/133_NE 23036033
QN N	plug (m) jack (f)	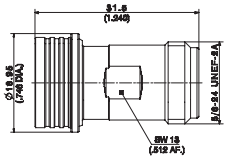
Material	brass/SUCO	

287	H+S type Item no.	32_N-SMA-50-51/1--_UE 22543916
N SMA	plug (m) plug (m)	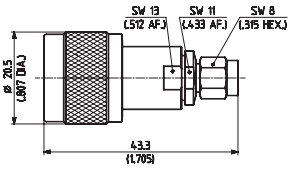
Material N SMA	 stainless steel CuBe/gold	
VSWR	DC to 18 GHz	≤ 1.025 + 0.007 • f (GHz)

287	H+S type Item no.	31_N-SMA-50-1/1--_UE 22542386
N SMA	jack (f) jack (f)	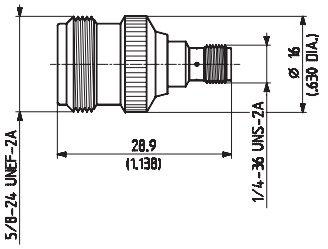
Material N SMA	 brass/SUCO CuBe/gold*	
VSWR	DC to 12.4 GHz	≤ 1.05 + 0.015 • f (GHz)

287	H+S type Item no.	33_N-SMA-50-1/113_UE 22542421
N SMA	plug (m) jack (f)	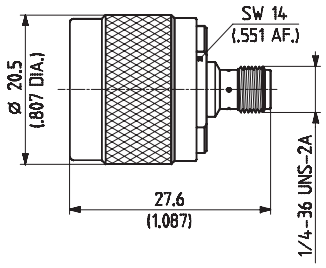
Material N SMA	 brass/SUCO CuBe/gold*	
VSWR	DC to 12.4 GHz	≤ 1.05 + 0.015 • f (GHz)

287	H+S type Item no.	31_N-SMA-50-51/1--_NE 22660178
N SMA	jack (f) jack (f)	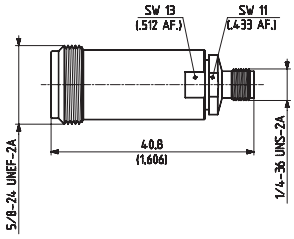
Material N SMA	 stainless steel CuBe/gold	
VSWR	DC to 18 GHz	≤ 1.025 + 0.007 • f (GHz)

287	H+S type Item no.	33_SMA-N-50-1/1--_UE 22640154
SMA N	plug (m) jack (f)	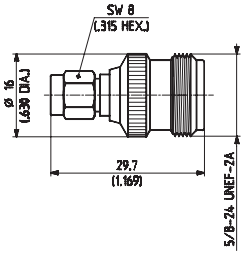
Material SMA N	 CuBe/gold brass/SUCO	
VSWR	DC to 12.4 GHz	≤ 1.05 + 0.015 • f (GHz)

287	H+S type Item no.	32_N-SMA-50-1/11-_NE 22542399
N SMA	plug (m) plug (m)	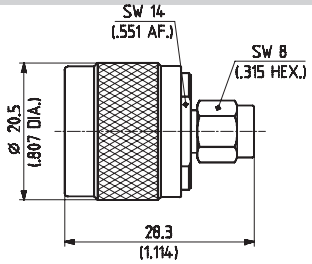
Material N SMA	 brass/SUCO CuBe/gold*	
VSWR	DC to 12.4 GHz	≤ 1.05 + 0.017 • f (GHz)

287	H+S type Item no.	33_SMA-N-Q50-4/1-3_NE 22660211
SMA N	plug (m) quick-mate jack (f)	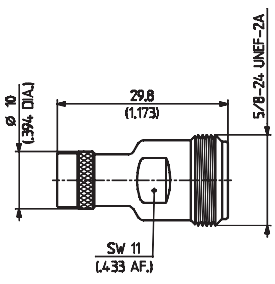
Material SMA N	 CuBe/SUPR brass/SUCO	
VSWR	DC to 6 GHz 6 to 12.4 GHz	≤ 1.07 ≤ 1.18

Introduction and general information on page 485 and 486/487.

Adaptors

287	H+S type Item no.	33_N-SMA-50-51/1--_NE 22660180
N SMA	plug (m) jack (f)	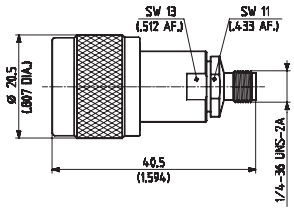
Material N SMA	 stainless steel CuBe/gold	
VSWR	DC to 18 GHz	≤ 1.025 + 0.007 • f (GHz)

287	H+S type Item no.	37_N-SMA-50-51/1--_NE 22645162
N SMA	jack (f) jack (f)	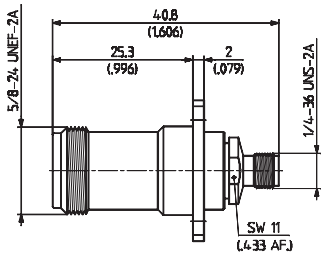
Material N SMA	 stainless steel CuBe/gold	
VSWR	DC to 18 GHz	≤ 1.025 + 0.007 • f (GHz)

287	H+S type Item no.	33_SMA-N-50-51/1--_NE 22660181
SMA N	plug (m) jack (f)	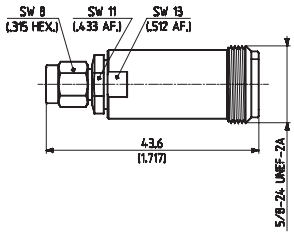
Material SMA N	 CuBe/gold stainless steel	
VSWR	DC to 18 GHz	≤ 1.025 + 0.007 • f (GHz)

287	H+S type Item no.	39_SMA-N-50-1/1--_NE 22640156
SMA N	plug (m) jack (f)	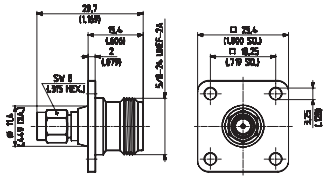
Material SMA N Mounting hole	 CuBe/gold brass/SUCO ML 13/14	
VSWR	DC to 12.4 GHz	≤ 1.05 + 0.015 • f (GHz)

287	H+S type Item no.	34_N-SMA-50-1/193_UE 22642820
N SMA	jack (f) jack (f)	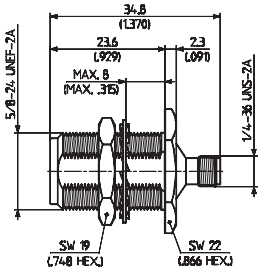
Material Mounting hole	stainless steel ML 12	
VSWR	DC to 12.4 GHz	≤ 1.05 + 0.017 • f (GHz)

288	H+S type Item no.	31_N-SMB-50-1/1--_UE 22542387
N SMB	jack (f) jack (f)	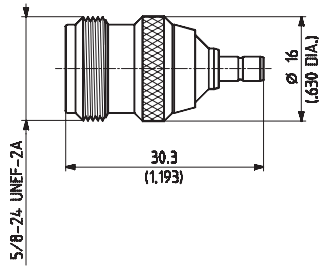
Material N SMB	 brass/SUCO brass/gold	
VSWR	DC to 3 GHz 3 to 4 GHz	≤ 1.03 + 0.08 • f (GHz) ≤ 1.27

287	H+S type Item no.	37_N-SMA-50-1/1--_UE 22543458
N SMA	jack (f) jack (f)	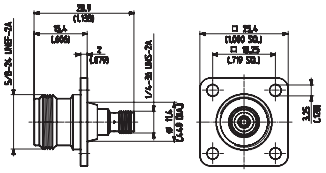
Material N SMA Mounting hole	 brass/SUCO CuBe/gold ML 13/14	
VSWR	DC to 12.4 GHz	≤ 1.05 + 0.015 • f (GHz)

288	H+S type Item no.	32_N-SMB-50-1/1--_UE 22542400
N SMB	plug (m) plug (m)	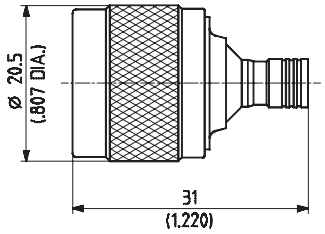
Material N SMB	 brass/SUCO brass/gold	
VSWR	DC to 3 GHz 3 to 4 GHz	≤ 1.03 + 0.08 • f (GHz) ≤ 1.27

Introduction and general information on page 485 and 486/487.

Adaptors

288	H+S type Item no.	33_N-SMB-50-1/1--_UE 22542422
N SMB	plug (m) jack (f)	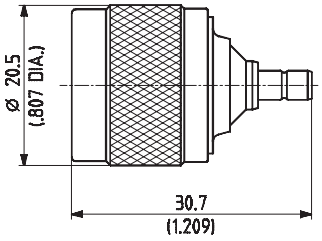
Material N SMB	 brass/SUCO brass/gold	
VSWR	DC to 3 GHz 3 to 4 GHz	≤ 1.03 + 0.08 • f (GHz) ≤ 1.27

288	H+S type Item no.	33_SMB-N-50-1/1--_UE 22640394
SMB N	plug (m) jack (f)	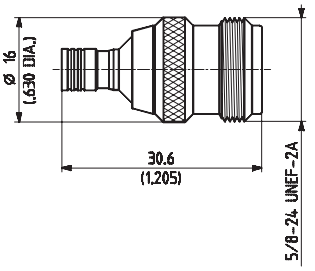
Material SMB N	 brass/gold brass/SUCO	
VSWR	DC to 3 GHz 3 to 4 GHz	≤ 1.03 + 0.08 • f (GHz) ≤ 1.27

288	H+S type Item no.	34_N-SMB-50-1/1--_UE 22642272
N SMB	jack (f) jack (f)	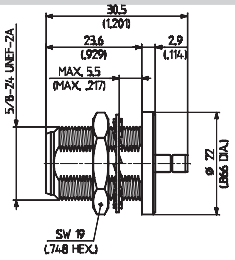
Material N SMB Mounting hole	 brass/SUCO brass/gold ML 12	
VSWR	DC to 4 GHz	≤ 1.22

288	H+S type Item no.	37_N-SMB-50-1/1--_UE 22641514
N SMB	jack (f) jack (f)	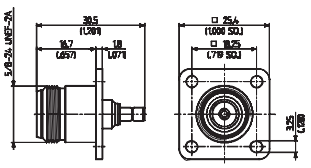
Material N SMB Mounting hole	 brass/SUCO brass/gold ML 14	
VSWR	DC to 4 GHz	≤ 1.06 + 0.08 • f (GHz)

289	H+S type Item no.	31_N-SMC-50-1/1--_NE 22542389
N SMC	jack (f) jack (f)	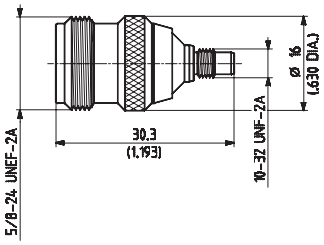
Material N SMC	 brass/SUCO brass/gold	
VSWR	DC to 2 GHz 2 to 4 GHz 4 to 10 GHz	≤ 1.10 ≤ 1.20 ≤ 1.40

289	H+S type Item no.	32_N-SMC-50-1/1--_NE 22542402
N SMC	plug (m) plug (m)	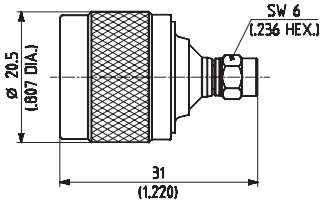
Material N SMC	 brass/SUCO brass/gold	
VSWR	DC to 2 GHz 2 to 4 GHz 4 to 10 GHz	≤ 1.10 ≤ 1.20 ≤ 1.40

289	H+S type Item no.	33_N-SMC-50-1/1--_NE 22542423
N SMC	plug (m) jack (f)	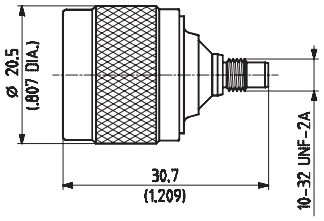
Material N SMC	 brass/SUCO brass/SUCO	
VSWR	DC to 2 GHz 2 to 4 GHz 4 to 10 GHz	≤ 1.10 ≤ 1.20 ≤ 1.40

289	H+S type Item no.	33_SMC-N-50-1/1--_NE 22640406
SMC N	plug (m) jack (f)	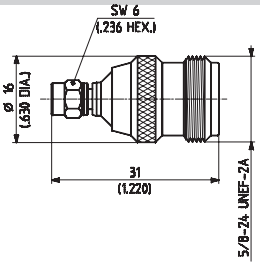
Material SMC N	 brass/gold brass/SUCO	
VSWR	DC to 2 GHz 2 to 4 GHz 4 to 10 GHz	≤ 1.10 ≤ 1.20 ≤ 1.40

Introduction and general information on page 485 and 486/487.

Adaptors

294	H+S type Item no.	31_N-TNC-50-1/133_UE 22542392
N TNC	jack (f) jack (f)	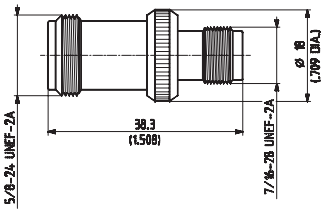
Material	brass/SUCO	
VSWR	DC to 7 GHz 7 to 11 GHz	≤ 1.06 + 0.12 • f (GHz) ≤ 1.90

294	H+S type Item no.	33_N-TNC-50-1/133_NE 22542427
N TNC	plug (m) jack (f)	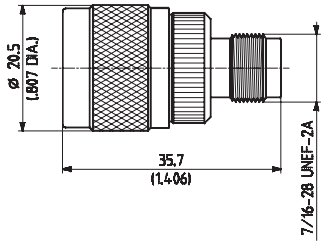
Material	brass/SUCO	
VSWR	DC to 11 GHz	≤ 1.13 + 0.02 • f (GHz)

294	H+S type Item no.	31_N-TNC-50-51/1--_UE 22543954
N TNC	jack (f) jack (f)	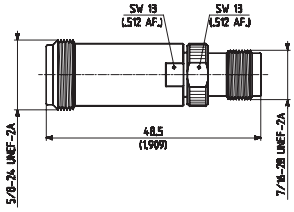
Material	stainless steel	
VSWR	DC to 12.4 GHz	≤ 1.05 + 0.01 • f (GHz)

294	H+S type Item no.	33_TNC-N-50-1/133_UE 22640637
TNC N	plug (m) jack (f)	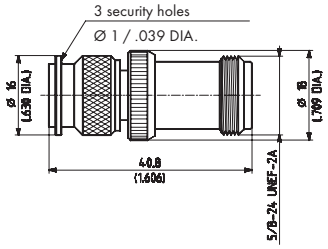
Material	brass/SUCO	
VSWR	DC to 3 GHz 3 to 5.5 GHz 5.5 to 11 GHz	≤ 1.05 ≤ 1.18 ≤ 2.00

294	H+S type Item no.	32_N-TNC-50-1/---_UE 22542406
N TNC	plug (m) plug (m)	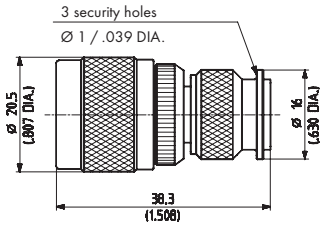
Material	brass/SUCO	
VSWR	DC to 11 GHz	≤ 1.06 + 0.11 • f (GHz)

294	H+S type Item no.	33_TNC-N-50-51/---_UE 22544046
TNC N	plug (m) jack (f)	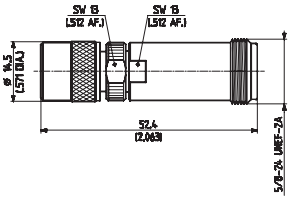
Material	stainless steel	
VSWR	DC to 12.4 GHz	≤ 1.05 + 0.01 • f (GHz)

294	H+S type Item no.	32_N-TNC-50-51/1--_UE 22543953
N TNC	plug (m) plug (m)	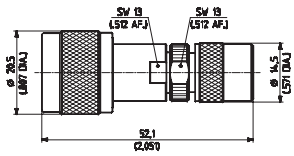
Material	stainless steel	
VSWR	DC to 12.4 GHz	≤ 1.05 + 0.01 • f (GHz)

294	H+S type Item no.	33_N-TNC-50-51/1--_UE 22543955
N TNC	plug (m) jack (f)	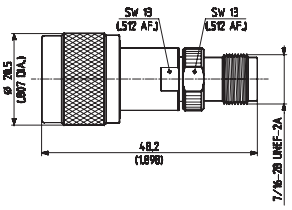
Material	stainless steel	
VSWR	DC to 12.4 GHz	≤ 1.05 + 0.01 • f (GHz)

Introduction and general information on page 485 and 486/487.

L'IMPULSION
Retrouvez nous sur
www.limpulsion.fr

Adaptors

294	H+S type Item no.	33_TNC-N-Q50-4/133_NE 22660360
TNC N	plug (m) quick-mate jack (f)	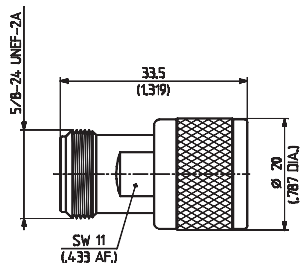
Material	brass/SUCO	
VSWR	DC to 4 GHz 4 to 8 GHz 8 to 11 GHz	≤ 1.065 ≤ 1.12 ≤ 1.28

294	H+S type Item no.	33_TNC-N-75-1/133_UE 22658811
TNC N	plug (m) jack (f)	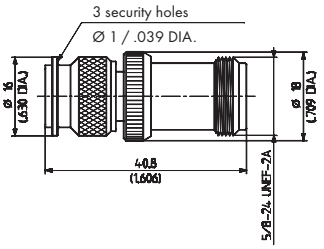
Material	brass/SUCO	

295	H+S type Item no.	31_N-4195-50-12/139_UE 22646160
N 4.1/9.5	jack (f) jack (f)	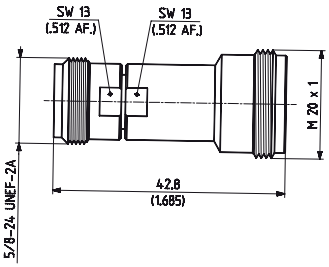
Material N 4.1/9.5	 stainless steel brass/SUCO	
VSWR	DC to 6 GHz 6 to 14 GHz	≤ 1.05 ≤ 1.12

295	H+S type Item no.	32_4195-N-50-1/1--_UE 22650781
4.1/9.5 N	plug (m) plug (m)	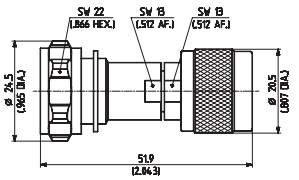
Material 4.1/9.5 N	 brass/SUCO stainless steel	
VSWR	DC to 14 GHz	≤ 1.06

295	H+S type Item no.	33_4195-N-50-1/---_UE 22646154
4.1/9.5 N	plug (m) jack (f)	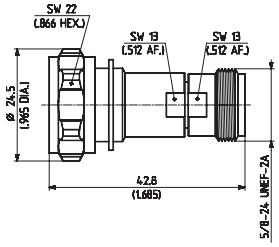
Material 4.1/9.5 N	 brass/SUCO stainless steel	
VSWR	DC to 6 GHz 6 to 14 GHz	≤ 1.05 ≤ 1.12

294	H+S type Item no.	33_N-4195-50-51/1-3_UE 22648618
N 4.1/9.5	plug (m) jack (f)	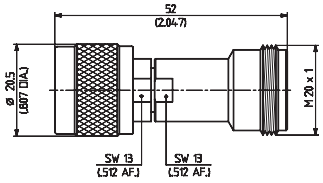
Material N 4.1/9.5	 stainless steel brass/SUCO	
VSWR	DC to 6 GHz 6 to 14 GHz	≤ 1.05 ≤ 1.12

296	H+S type Item no.	33_4310-N-50-X1/133_NE 85017229
4.3-10 N	plug (m) jack (f)	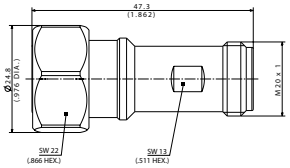
Material	brass	
VSWR	DC to 4 GHz 4 to 6 GHz	≤ 1.032 ≤ 1.052

296	H+S type Item no.	33_N-4310-50-1/133_NE 85017232
N 4.3-10	plug (m) jack (f)	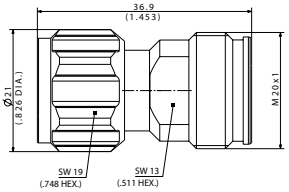
Material	brass	
VSWR	DC to 4 GHz 4 to 6 GHz	≤ 1.032 ≤ 1.052

Introduction and general information on page 485 and 486/487.

Adaptors

297	H+S type Item no.	31_N-716-50-1/---_UE 22640869
N 7/16	jack (f) jack (f)	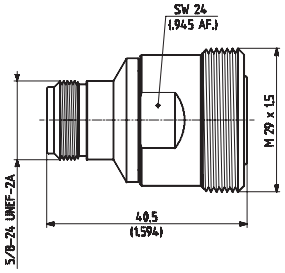
Material	brass/SUCO	
VSWR	DC to 7.5 GHz	≤ 1.03 + 0.02

297	H+S type Item no.	32_N-716-50-1/---_NE 22544576
N 7/16	plug (m) plug (m)	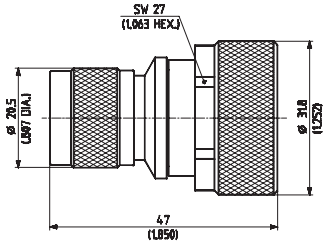
Material N 7/16	 brass/SUCO brass/silver	
VSWR	DC to 7.5 GHz	≤ 1.03 + 0.02 • f (GHz)

297	H+S type Item no.	31_N-716-50-2/133_WE 22658137
N 7/16	jack (f) jack (f)	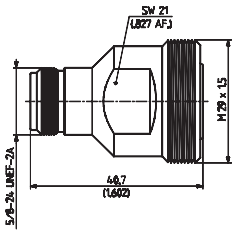
Material	brass/SUCO	
PIM: ≤ −165 dBc		

297	H+S type Item no.	32_N-716-50-2/133_WE 22658140
N 7/16	plug (m) plug (m)	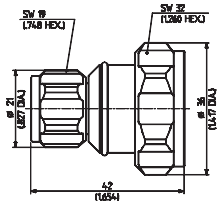
Material	brass/SUCO	
PIM: ≤ −165 dBc		

297	H+S type Item no.	31_716-N-Q50-1/1-3_NE 23008294
7/16 N	jack (f) quick-mate jack (f)	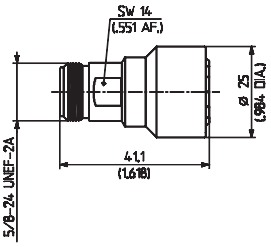
Material	brass/SUCO	
VSWR	DC to 6 GHz	≤ 1.02 + 0.04 • f (GHz)

297	H+S type Item no.	32_N-716-50-51/-33_NE 22544127
N 7/16	plug (m) plug (m)	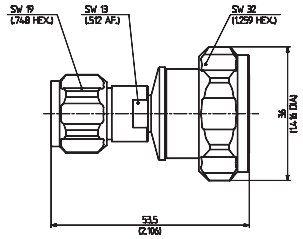
Material	brass/SUCO	
VSWR	DC to 7.5 GHz	≤ 1.03 + 0.004 • f (GHz)

297	H+S type Item no.	31_N-716-50-51/-33_NE 22544129
N 7/16	jack (f) jack (f)	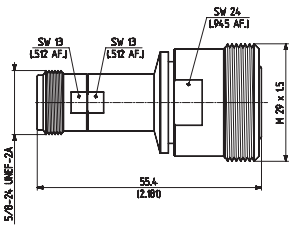
Material	brass/SUCO	
VSWR	DC to 7.5 GHz	≤ 1.03 + 0.004 • f (GHz)

297	H+S type Item no.	33_N-716-50-1/---_UE 22641229
N 7/16	plug (m) jack (f)	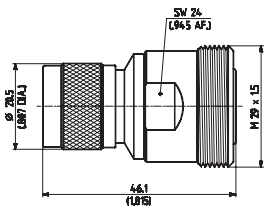
Material N 7/16	 brass/SUCO brass/silver	
VSWR	DC to 7.5 GHz	≤ 1.03 + 0.02 • f (GHz)

Introduction and general information on page 485 and 486/487.

L'IMPULSION
Retrouvez nous sur
www.limpulsion.fr

Adaptors

297	H+S type Item no.	33_716-N-50-1/---_UE 22544119
7/16 N	plug (m) jack (f)	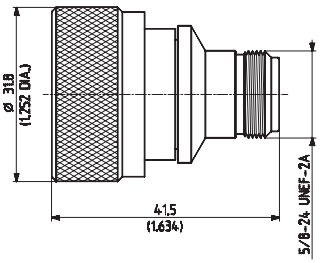
Material 7/16 N	 brass/silver brass/SUCO	
VSWR	DC to 7.5 GHz:	≤ 1.03 + 0.02 • f (GHz)

297	H+S type Item no.	33_N-716-50-51/-33_NE 22544123
N 7/16	plug (m) jack (f)	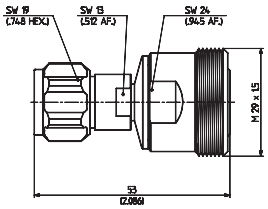
Material	brass/SUCO	
VSWR	DC to 7.5 GHz:	≤ 1.03 + 0.004 • f (GHz)

297	H+S type Item no.	33_716-N-50-3/133_WE 22658823
7/16 N	male (m) jack (f)	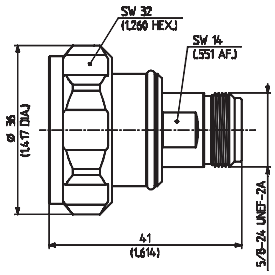
Material	brass/SUCO	
PIM: ≤ −165 dBc		

297	H+S type Item no.	33_716-N-50-51/-33 NE 22544125
7/16 N	plug (m) jack (f)	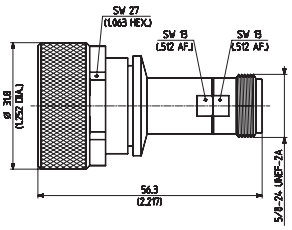
Material	brass/SUCO	
VSWR	DC to 7.5 GHz:	≤ 1.03 + 0.004 • f (GHz)

297	H+S type Item no.	33_N-716-50-3/133_WE 22658217
N 7/16	plug (m) jack (f)	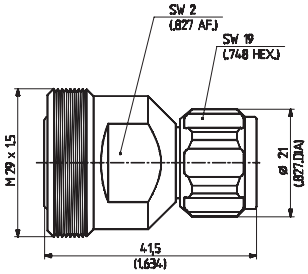
Material	brass/SUCO	
PIM: ≤ −165 dBc		

297	H+S type Item no.	37_N-716-50-1/003_-E 23001317
N 7/16	jack (f) jack (f)	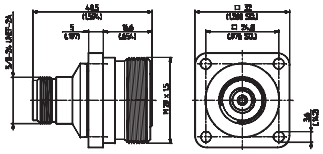
Material Mounting hole	brass/silver ML 27	
VSWR	DC to 7.5 GHz:	≤ 1.03 + 0.02 • f (GHz)

297	H+S type Item no.	33_716-N-Q50-4/133_UE 23000487
7/16 N	plug (m) quick-mate jack (f)	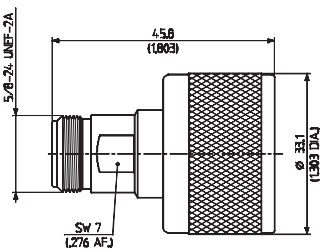
Material	brass/SUCO	
VSWR	DC to 4 GHz 4 to 7.5 GHz	≤ 1.05 ≤ 1.15

303	H+S type Item no.	33_NEX10-PC35-50-X1/1-9_NE 85092467
NEX10 PC 3.5	plug (male) jack (female)	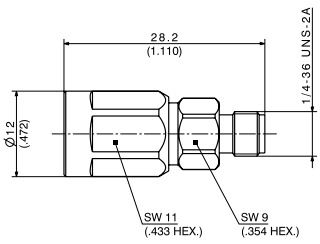
Material NEX10 PC 3.5	 stainless steel stainless steel	

Introduction and general information on page 485 and 486/487.

Adaptors

303	H+S type Item no.	33_PC35-NEX10-50-1/199_NE 85092475
PC 3.5 NEX10	plug (male) jack (female)	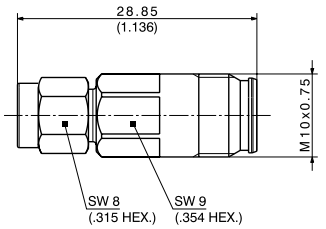
Material PC 3.5 NEX10	 stainless steel stainless steel	

318	H+S type Item no.	33_716-NEX10-50-1/133_WE 85092476
7/16 NEX10	plug (male) jack (female)	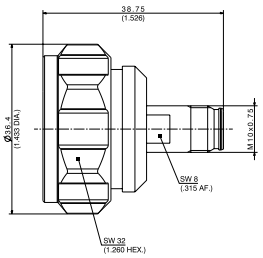
Material 7/16 NEX10	 brass/SUCO brass/SUCO	
VSWR	DC to 2 GHz 2 to 6 GHz	≤ 1.065 ≤ 1.119

317	H+S type Item no.	31_NEX10-4310-50-1/003_-E 85137126
NEX10 4.3-10	jack (female) jack (female)	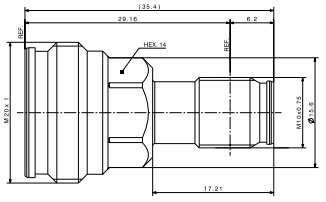
Material NEX10 4.3-10	 brass/SUCO brass/SUCO	

318	H+S type Item no.	33_NEX10-716-50-X1/133_WE 85092478
NEX10 7/16	plug (male) jack (female)	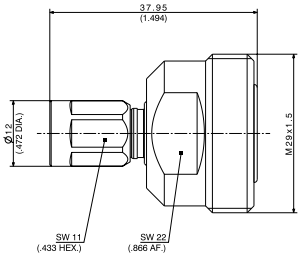
Material NEX10 7/16	 brass/SUCO brass/SUCO	
VSWR	DC to 2 GHz 2 to 6 GHz	≤ 1.065 ≤ 1.119

317	H+S type Item no.	33_NEX10-4310-50-X1/003_-E 85095346
NEX10 4.3-10	plug (male) jack (female)	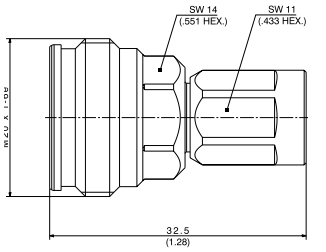
Material NEX10 4.3-10	 brass/SUCO brass/SUCO	

319	H+S type Item no.	31_PC1-50-0-1/111_UE 85031727
PC1.0	jack (f) 2 ×	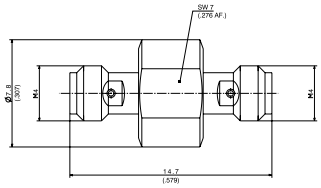
Material	CuBe/gold	
VSWR	DC to 50 GHz 50 to 75 GHz 75 to 110 GHz	≤ 1.222 ≤ 1.308 ≤ 1.377

318	H+S type Item no.	31_NEX10-716-50-1/133_WE 85137125
7/16 NEX10	jack (female) jack (female)	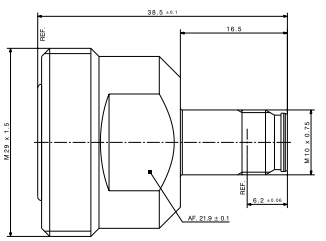
Material 7/16 NEX10	 brass/SUCO brass/SUCO	
VSWR	DC to 3 GHz 3 to 6 GHz	≤ 1.052 ≤ 1.152

319	H+S type Item no.	32_PC1-50-0-1/11-_UE 85031743
PC1.0	plug (m) 2 ×	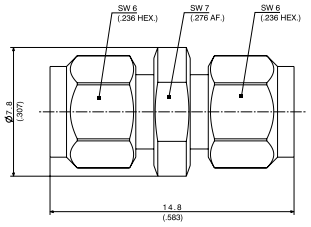
Material	CuBe/gold	
VSWR	DC to 50 GHz 50 to 75 GHz 75 to 110 GHz	≤ 1.222 ≤ 1.308 ≤ 1.377

Introduction and general information on page 485 and 486/487.

L'IMPULSION
Retrouvez nous sur
www.limpulsion.fr

Adaptors

319	H+S type Item no.	33_PC1-50-0-1/11-_UE 85031288
PC1.0	plug (m) jack (f)	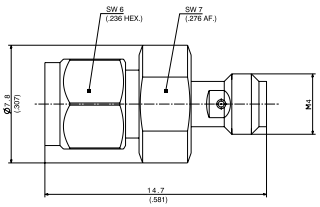
Material	CuBe/gold	
VSWR	DC to 50 GHz 50 to 75 GHz 75 to 110 GHz	≤ 1.222 ≤ 1.308 ≤ 1.377

339	H+S type Item no.	31_PC185-50-0-1/199_NE 84132746
PC1.85	jack (f) 2 ×	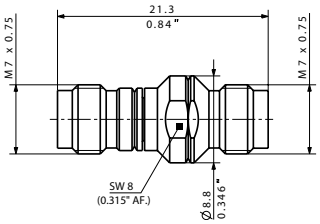
Material	stainless steel	
VSWR	DC to 30 GHz 30 to 50 GHz 50 to 67 GHz	≤ 1.083 ≤ 1.119 ≤ 1.152

339	H+S type Item no.	32_PC185-50-0-1/19-_NE 84132748
PC1.85	plug (m) 2 ×	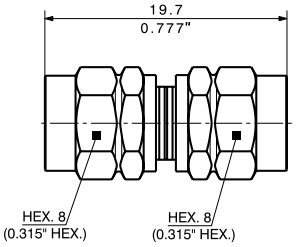
Material	stainless steel	
VSWR	DC to 35 GHz 35 to 55 GHz 55 to 67 GHz	≤ 1.052 ≤ 1.065 ≤ 1.106

339	H+S type Item no.	33_PC185-50-0-1/199_NE 84019546
PC1.85	plug (m) jack (f)	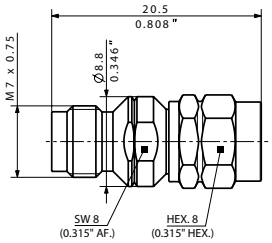
Material	stainless steel	
VSWR	DC to 25 GHz 25 to 45 GHz 45 to 67 GHz	≤ 1.052 ≤ 1.065 ≤ 1.106

359	H+S type Item no.	31_PC24-SK-50-1/199_NE 84008075
PC2.4 SK (2.92 mm)	jack (f) jack (f)	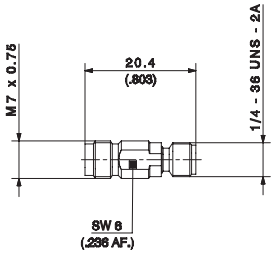
Material	stainless steel	
VSWR	DC to 40 GHz	≤ 1.12

359	H+S type Item no.	32_PC24-SK-50-1/199_NE 23004729
PC2.4 SK (2.92 mm)	plug (m) plug (m)	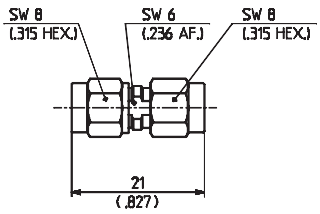
El. length	16.1 mm	
Material	stainless steel	
VSWR	DC to 40 GHz	≤ 1.12

359	H+S type Item no.	33_PC24-SK-50-2/199_NE 23004730
PC2.4 SK (2.92 mm)	plug (m) jack (f)	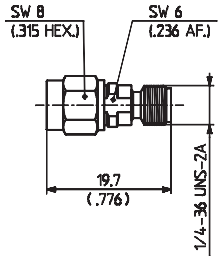
El. length	16.1 mm	
Material	stainless steel	
VSWR	DC to 40 GHz	≤ 1.12

359	H+S type Item no.	33_SK-PC24-50-1/199_NE 23004731
SK (2.92 mm) PC2.4	plug (m) jack (f)	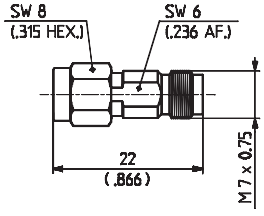
El. length	16.1 mm	
Material	stainless steel	
VSWR	DC to 40 GHz	≤ 1.12

Introduction and general information on page 485 and 486/487.

Adaptors

376	H+S type	31_SK-50-0-1/199_NE
	Item no.	23004726
SK (2.92 mm)	jack (f) 2 ×	
El. length	16.1 mm	
Material	stainless steel	
VSWR	DC to 40 GHz	≤ 1.20

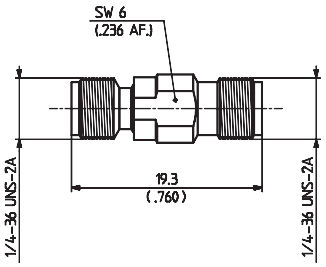

376	H+S type	32_SK-50-0-1/199_NE
	Item no.	23004727
SK (2.92 mm)	plug (m) 2 ×	
El. length	16.1 mm	
Material	stainless steel	
VSWR	DC to 40 GHz	≤ 1.20

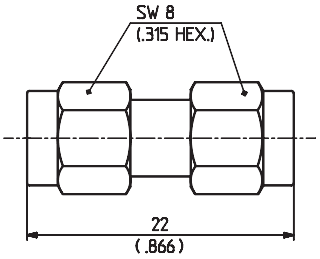

376	H+S type	33_SK-50-0-1/199_NE
	Item no.	23004728
SK (2.92 mm)	plug (m) jack (f)	
El. length	16.1 mm	
Material	stainless steel	
VSWR	DC to 40 GHz	≤ 1.20

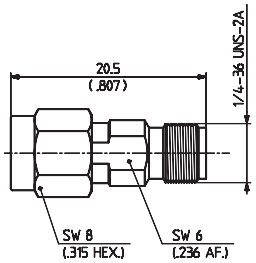

376	H+S type	34_SK-50-0-51/199_NE
	Item no.	22658969
SK (2.92 mm)	jack (f) 2 ×	
Material	stainless steel	
Mounting hole	ML 35	
VSWR	DC to 40 GHz	≤ 1.02 + 0.01 • f (GHz)

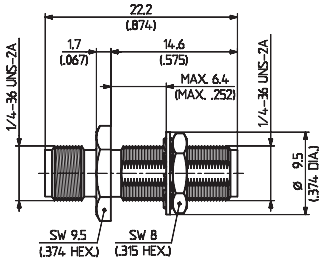

385	H+S type	29487-1
	Item no.	80318037
SMP SK (2.92 mm)	male full detent plug (m)	
Material	stainless steel (passivated)	
VSWR	DC to 40 GHz	≤ 1.35

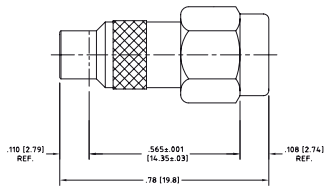

385	H+S type	29487-1-3
	Item no.	80367952
SMP SK (2.92 mm)	male limited detent plug (m)	
Material	stainless steel (passivated)	
VSWR	DC to 40 GHz	≤ 1.35

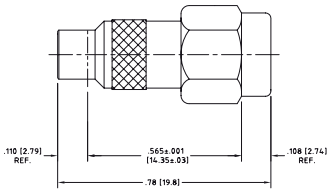

385	H+S type	29487-1-4
	Item no.	80370562
SMP SK (2.92 mm)	male smooth bore plug (m)	
Material	stainless steel (passivated)	
VSWR	DC to 40 GHz	≤ 1.35

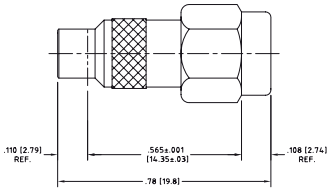

385	H+S type	29487-2
	Item no.	80318038
SMP SK (2.92 mm)	male full detent jack (f)	
Material	stainless steel	
VSWR	DC to 40 GHz	≤ 1.35

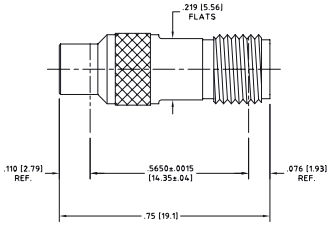

Introduction and general information on page 485 and 486/487.

L'IMPULSION
Retrouvez nous sur
www.limpulsion.fr

Adaptors

385	H+S type	29487-3
	Item no.	80318039
SMP SK (2.92 mm)	female jack (f)	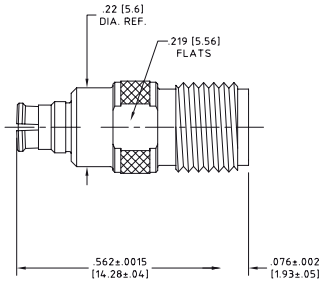
Material	CuBe/gold	
VSWR	DC to 40 GHz	≤ 1.35

385	H+S type	29487-4
	Item no.	80363059
SMP SK (2.92 mm)	female plug (m)	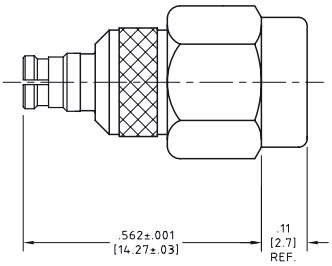
Material	CuBe/gold	
VSWR	DC to 40 GHz	≤ 1.35

386	H+S type	29429-1
	Item no.	80317861
SMPM SK (2.92 mm)	male full detent plug (m)	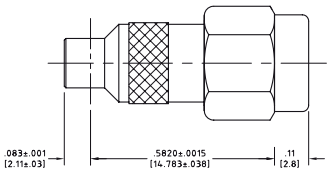
Material	CuBe/gold	
VSWR	DC to 40 GHz	≤ 1.35

386	H+S type	29429-4
	Item no.	80362544
SMPM SK (2.92 mm)	male full detent jack (f)	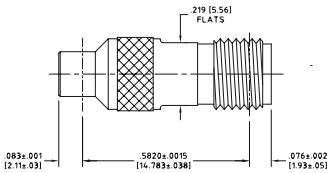
Material	CuBe/gold	
VSWR	DC to 40 GHz	≤ 1.35

387	H+S type	29429-1T2
	Item no.	80317870
SMPM-T SK (2.92 mm)	male full detent plug (m)	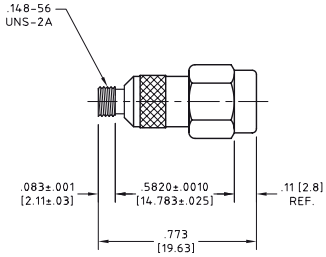
Material	CuBe/gold	
VSWR	DC to 40 GHz	≤ 1.35

387	H+S type	29429-4T2
	Item no.	80362561
SMPM-T SK (2.92 mm)	male full detent jack (f)	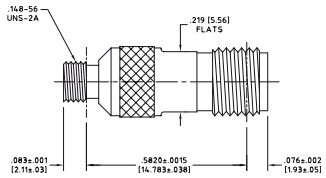
Material	CuBe/gold	
VSWR	DC to 40 GHz	≤ 1.35

393	H+S type	31_PC35-50-0-1/199_UE
	Item no.	22644360
PC3.5	jack (f) 2 ×	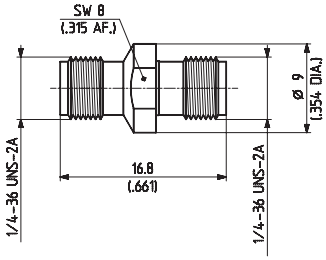
El. length	14.1 mm	
Material	stainless steel	
VSWR	DC to 18 GHz 18 to 26.5 GHz	≤ 1.08 ≤ 1.15

393	H+S type	31_PC35-50-0-2/199_NE
	Item no.	23020456
PC3.5	jack (f) 2 ×	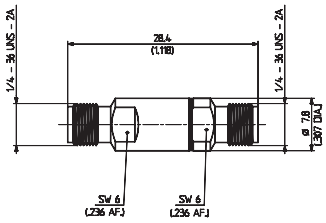
El. length	25.5 mm	
Material	stainless steel	
VSWR	DC to 1.5 GHz 1.5 to 6 GHz 6 to 18 GHz	≤ 1.036 ≤ 1.065 ≤ 1.22

Introduction and general information on page 485 and 486/487.

Adaptors

393	H+S type Item no.	32_PC35-50-0-1/199_UE 22644361
PC3.5	plug (m) 2 ×	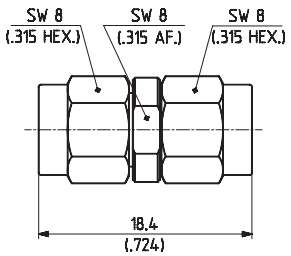
El. length	14.1 mm	
Material	stainless steel	
VSWR	DC to 18 GHz 18 to 26.5 GHz	≤ 1.08 ≤ 1.15

393	H+S type Item no.	32_PC35-50-0-2/199_NE 23020457
PC3.5	plug (m) 2 ×	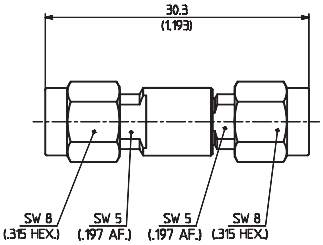
El. length	25.5 mm	
Material	stainless steel	
VSWR	DC to 1.5 GHz 1.5 to 6 GHz 6 to 18 GHz	≤ 1.036 ≤ 1.065 ≤ 1.22

393	H+S type Item no.	33_PC35-50-0-1/199_UE 22644362
PC3.5	plug (m) jack (f)	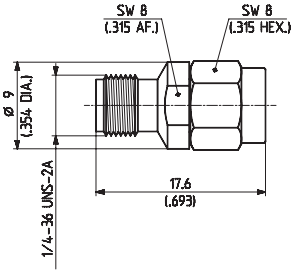
El. length	14.1 mm	
Material	stainless steel	
VSWR	DC to 18 GHz 18 to 26.5 GHz	≤ 1.08 ≤ 1.15

393	H+S type Item no.	33_PC35-50-0-2/199_NE 23020453
PC3.5	plug (m) jack (f)	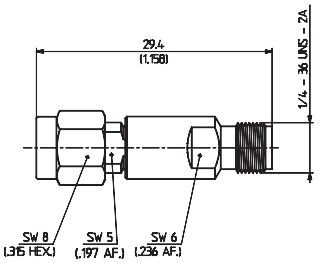
El. length	25.5 mm	
Material	stainless steel	
VSWR	DC to 1.5 GHz 1.5 to 6 GHz 6 to 18 GHz	≤ 1.036 ≤ 1.065 ≤ 1.22

394	H+S type Item no.	32_PC7-PC35-50-1/1--_UE 22644230
PC7 PC3.5	plug (m)	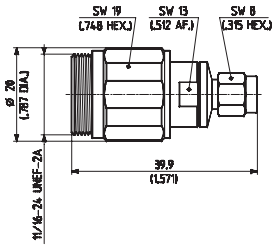
Material PC7 PC3.5	 brass/gold stainless steel	
VSWR	DC to 15 GHz 15 to 18 GHz	≤ 1.05 ≤ 1.09

394	H+S type Item no.	32_PC35-PC7-50-3/-33_NE 23003902
PC3.5 PC7	plug (m)	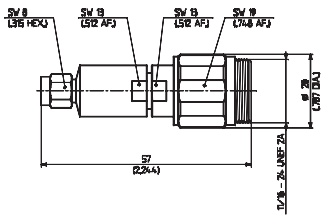
Material PC3.5 PC7	 brass/SUCO brass/gold	
VSWR	DC to 18 GHz	≤ 1.06

394	H+S type Item no.	33_PC7-PC35-50-1/1--_UE 22644231
PC7 PC3.5	jack (f)	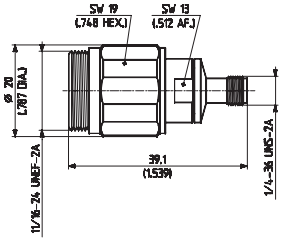
Material PC7 PC3.5	 brass/gold stainless steel	
VSWR	DC to 15 GHz 15 to 18 GHz	≤ 1.05 ≤ 1.09

396	H+S type Item no.	31_PC35-QMA-50-1/199_NE 23017468
PC3.5 QMA	jack (f) jack (f)	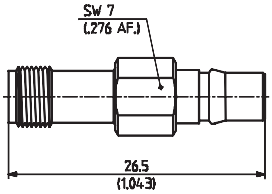
El. length	25.5 mm	
Material	stainless steel	
VSWR	DC to 1.5 GHz 1.5 to 6 GHz 6 to 18 GHz	≤ 1.036 ≤ 1.065 ≤ 1.22

Introduction and general information on page 485 and 486/487.

L'IMPULSION
Retrouvez nous sur
www.limpulsion.fr

Adaptors

396	H+S type Item no.	32_PC35-QMA-50-1/1--_NE 23017489
PC3.5 QMA	plug (m) plug (m)	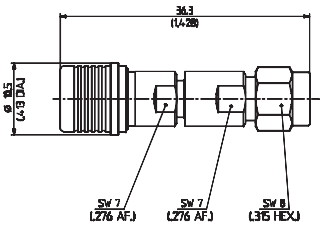
El. length	25.5 mm	
Material	stainless steel	
VSWR	DC to 1.5 GHz 1.5 to 6 GHz 6 to 18 GHz	≤ 1.036 ≤ 1.065 ≤ 1.22

396	H+S type Item no.	33_PC35-QMA-50-1/199_NE 23017467
PC3.5 QMA	plug (m) jack (f)	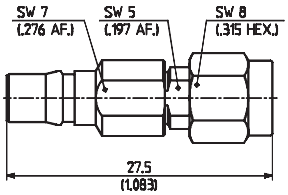
El. length	25.5 mm	
Material	stainless steel	
VSWR	DC to 1.5 GHz 1.5 to 6 GHz 6 to 18 GHz	≤ 1.036 ≤ 1.065 ≤ 1.22

396	H+S type Item no.	33_QMA-PC35-50-1/1--_NE 23017488
QMA PC3.5	plug (m) jack (f)	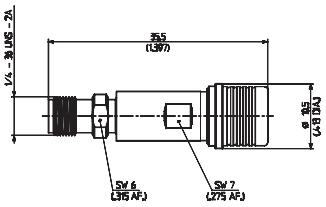
El. length	25.5 mm	
Material	stainless steel	
VSWR	DC to 1.5 GHz 1.5 to 6 GHz 6 to 18 GHz	≤ 1.036 ≤ 1.065 ≤ 1.22

407	H+S type Item no.	33_4310-PC35-50-X1/133_NE 85017252
4.3-10 PC3.5	plug (m) jack (f)	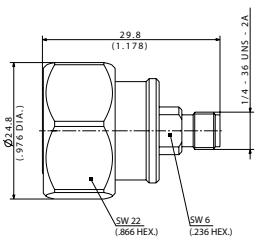
Material	brass	
VSWR	DC to 4 GHz 4 to 6 GHz	≤ 1.032 ≤ 1.052

407	H+S type Item no.	33_PC35-4310-50-1/1-9_NE 85017256
PC3.5 4.3-10	plug (m) jack (f)	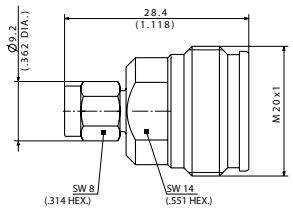
Material	brass	

412	H+S type Item no.	32_PC7-QN-50-1/1--_NE 23032720
PC7 QN	plug (m)	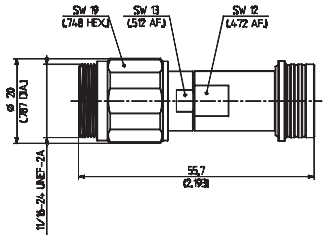
El. length	41.85 mm	
Material	brass/gold	
VSWR	DC to 3 GHz 3 to 6 GHz 6 to 11 GHz	≤ 1.03 ≤ 1.05 ≤ typ. 1.12

412	H+S type Item no.	33_PC7-QN-50-1/1--_NE 23032722
PC7 QN	jack (f)	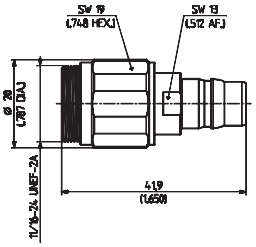
El. length	41.85 mm	
Material PC7 QN	 brass/gold stainless steel	
VSWR	DC to 3 GHz 3 to 6 GHz 6 to 11 GHz	≤ 1.03 ≤ 1.05 ≤ typ. 1.12

413	H+S type Item no.	32_PC7-SMA-50-1/---_UE 22543546
PC7 SMA	plug (m)	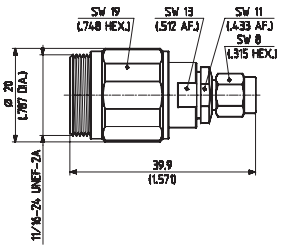
Material PC7 SMA	 brass/gold CuBe/gold	
VSWR	DC to 18 GHz	≤ 1.025 + 0.002 • f (GHz)

Introduction and general information on page 485 and 486/487.

Adaptors

413	H+S type Item no.	33_PC7-SMA-50-1/1--_UE 22543548
PC7 SMA	jack (f)	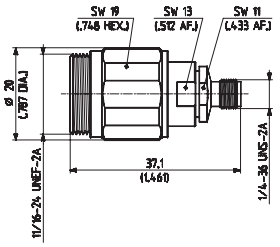
Material PC7 SMA	 brass/gold CuBe/gold	
VSWR	DC to 18 GHz	≤ 1.025 + 0.002 • f (GHz)

420	H+S type Item no.	32_PC7-TNC-50-52/-33_NE 23003983
PC7 TNC	plug (m)	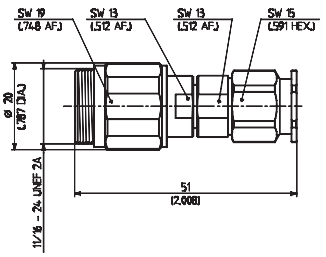
Material PC7 TNC	 brass/gold stainless steel	
VSWR	DC to 18 GHz	≤ 1.03 + 0.009 • f (GHz)

420	H+S type Item no.	33_PC7-TNC-50-52/-33_NE 23003920
PC7 TNC	jack (f)	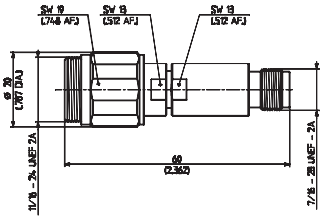
Material PC7 TNC	 brass/gold stainless steel	
VSWR	DC to 18 GHz	≤ 1.03 + 0.009 • f (GHz)

424	H+S type Item no.	31_QLA-01-0-1/112_NE 22640028
QLA	jack (f) 2 ×	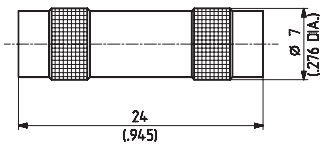
Material	brass/nickel	

424	H+S type Item no.	34_QLA-01-0-2/112_NE 22640031
QLA	jack (f) 2 ×	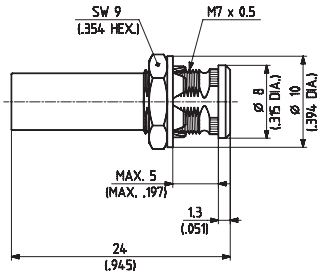
Material Mounting hole	brass/nickel ML 99	

424	H+S type Item no.	43_QLA-01-0-1/112_NE 22640032
QLA	jack (f) 2 × plug (m) 1 ×	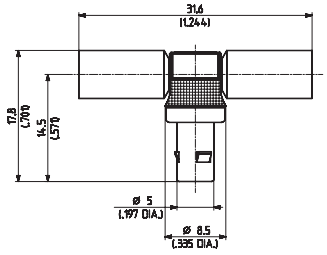
Material	brass/nickel	

424	H+S type Item no.	45_QLA-01-0-1/112_NE 22640033
QLA	jack (f) 2 × plug (m) 1 ×	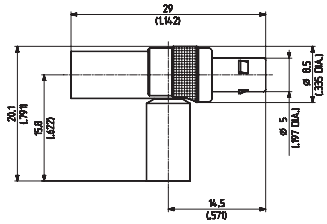
Material	brass/nickel	

438	H+S type Item no.	31_QMA-50-0-1/199_NE 23023171
QMA	jack (f) 2 ×	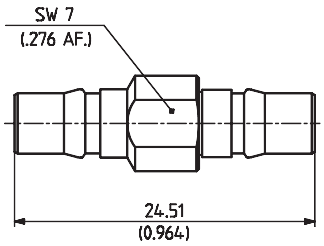
Material	stainless steel	
VSWR	DC to 1.5 GHz 1.5 to 6 GHz	≤ 1.036 ≤ 1.065

Introduction and general information on page 485 and 486/487.

L'IMPULSION
Retrouvez nous sur
www.limpulsion.fr

Adaptors

438	H+S type Item no.	32_QMA-50-0-1/1-_NE 23023199
QMA	plug (m) 2 ×	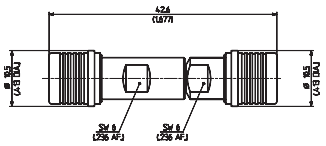
Material	stainless steel	
VSWR	DC to 1.5 GHz 1.5 to 6 GHz	≤ 1.036 ≤ 1.065

440	H+S type Item no.	33_QMA-SMA-50-1/133_NE 84014876
QMA SMA	plug (m) jack (f)	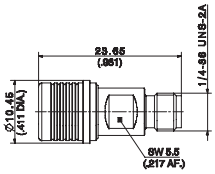
Material	brass/SUCO	
VSWR	DC to 4 GHz 4 to 6 GHz	≤ 1.05 ≤ 1.17

440	H+S type Item no.	33_SMA-QMA-50-1/133_NE 84012204
SMA QMA	plug (m) jack (f)	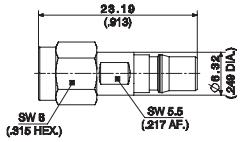
Material	brass/SUCO	
VSWR	DC to 4 GHz 4 to 6 GHz	≤ 1.05 ≤ 1.17

440	H+S type Item no.	39_QMA-SMA-U50-1/11-_NE 23022741
QMA SMA	plug (m) jack (f)	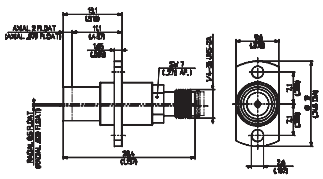
Material QMA SMA Mounting hole	 stainless steel CuBe/SUPR ML 58	
VSWR	DC to 2 GHz 1.2 to 4 GHz 4 to 6 GHz	≤ 1.04 ≤ 1.05 ≤ 1.08

462	H+S type Item no.	31_QN-716-50-1/113_WE 23033269
QN 7/16	jack (f) jack (f)	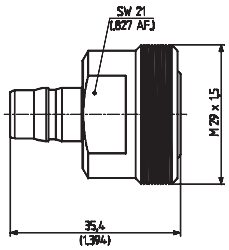
Material	brass/SUCO	
PIM: ≤ −155 dBc		

462	H+S type Item no.	32_QN-716-50-1/113_WE 23033643
QN 7/16	plug (m) plug (m)	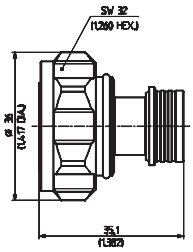
Material	brass/SUCO	
PIM	≤ −155 dBc	

462	H+S type Item no.	33_QN-716-50-1/113_WE 23033550
QN 7/16	plug (m) jack (f)	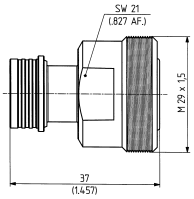
Material	brass/SUCO	
PIM	≤ −155 dBc	

462	H+S type Item no.	33_716-QN-50-1/113_WE 23033644
7/16 QN	plug (m) jack (f)	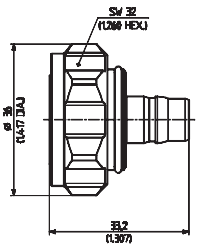
Material	brass/SUCO	
PIM: ≤ −155 dBc		

Introduction and general information on page 485 and 486/487.

L'IMPULSION | Retrouvez nous sur www.limpulsion.fr

Adaptors

463	H+S type Item no.	31_SMA-50-0-1/111_NE 22640150
SMA	jack (f) 2 ×	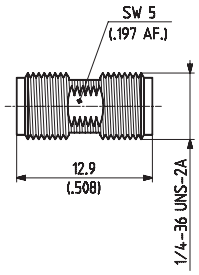
Material	CuBe/gold	
VSWR	DC to 18 GHz	≤ 1.05 + 0.01 • f (GHz)

463	H+S type Item no.	33_SMA-50-0-1/111_NE 22641119
SMA	plug (m) jack (f)	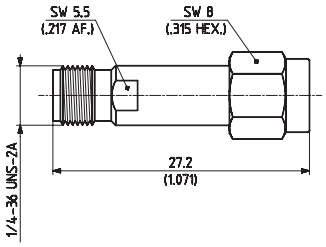
Material	CuBe/gold	
VSWR	DC to 18 GHz	≤ 1.05 + 0.008 • f (GHz)

463	H+S type Item no.	31_SMA-50-0-51/199_NE 22641486
SMA	jack (f) 2 ×	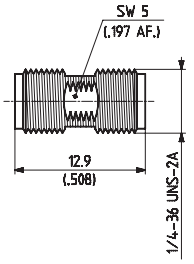
Material	stainless steel	
VSWR	DC to 18 GHz	≤ 1.05 + 0.01 • f (GHz)

463	H+S type Item no.	33_SMA-Q50-0-4/1-9_NE 22660213
SMA	plug (m) quick-mate jack (f)	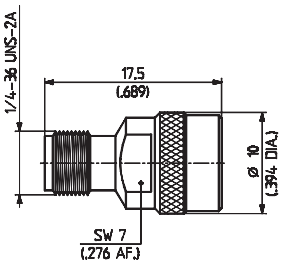
Material	CuBe/SUPR	
VSWR	DC to 5 GHz 5 to 16 GHz 16 to 18 GHz	≤ 1.07 ≤ 1.22 ≤ 1.28

463	H+S type Item no.	32_SMA-50-0-1/111_NE 22640151
SMA	plug (m) 2 ×	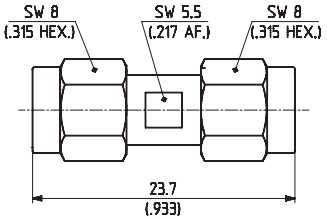
Material	CuBe/gold	
VSWR	DC to 18 GHz	≤ 1.05 + 0.005 • f (GHz)

463	H+S type Item no.	33_SMA-50-0-51/199_NE 22644253
SMA	plug (m) jack (f)	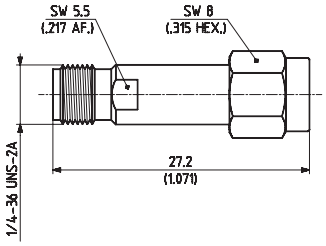
Material	stainless steel	
VSWR	DC to 18 GHz	≤ 1.05 + 0.008 • f (GHz)

463	H+S type Item no.	32_SMA-50-0-52/199_NE 22643689
SMA	plug (m) 2 ×	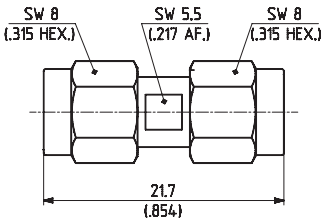
Material	stainless steel	
VSWR	DC to 18 GHz	≤ 1.05 + 0.005 • f (GHz)

463	H+S type Item no.	34_SMA-50-0-1/111_NE 23009027
SMA	jack (f) 2 ×	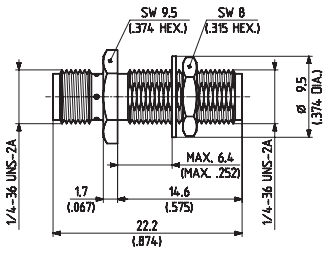
Material Mounting hole	CuBe/gold ML 35	
VSWR	DC to 18 GHz	≤ 1.05 + 0.005 • f (GHz)

Introduction and general information on page 485 and 486/487.

L'IMPULSION
Retrouvez nous sur
www.limpulsion.fr

Adaptors

463	H+S type Item no.	34_SMA-50-0-3/111_NE 22641297
SMA	jack (f) 2 ×	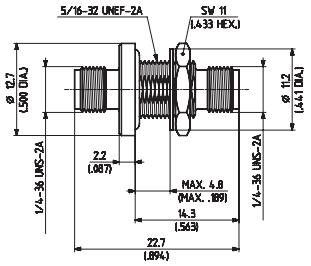
Hermetic sealed		
Material	CuBe/gold	
Mounting hole	ML 38	
VSWR	DC to 3 GHz	≤ 1.1
	3 to 7 GHz	≤ 1.2
	7 to 18 GHz	≤ 1.3

463	H+S type Item no.	53_SMA-50-0-51/199_NE 22642655
SMA	plug (m) jack (f)	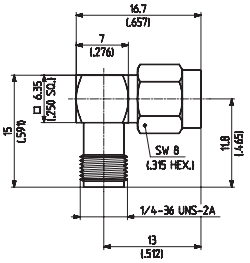
Material	stainless steel	
VSWR	DC to 14 GHz	≤ 1.02 + 0.03 • f (GHz)

463	H+S type Item no.	34_SMA-50-0-51/199_NE 22544823
SMA	jack (f) 2 ×	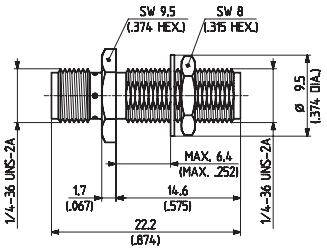
Material	stainless steel	
Mounting hole	ML 35	
VSWR	DC to 18 GHz	≤ 1.05 + 0.005 • f (GHz)

464	H+S type Item no.	31_SMA-SMB-50-1/111_UE 22641728
SMA SMB	jack (f) jack (f)	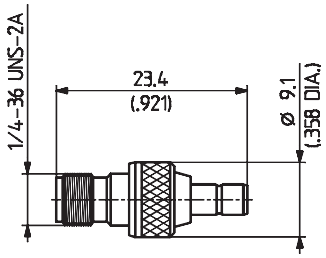
Material		
SMA	CuBe/gold	
SMB	brass/gold	
VSWR	DC to 4 GHz	≤ 1.05 + 0.04 • f (GHz)

463	H+S type Item no.	43_SMA-50-0-1/111_NE 22543356
SMA	plug (m) 1 × jack (f) 2 ×	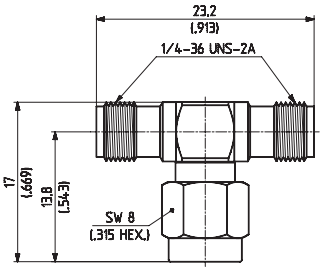
Material	CuBe/gold	

464	H+S type Item no.	33_SMA-SMB-50-1/111_NE 22658917
SMA SMB	plug (m) jack (f)	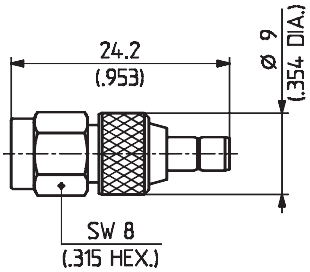
Material	brass/gold	
VSWR	DC to 4 GHz	≤ 1.05 + 0.04 • f (GHz)
	4 to 7 GHz	≤ 1.21

463	H+S type Item no.	46_SMA-50-0-1/111_NE 22543357
SMA	jack (f) 3 ×	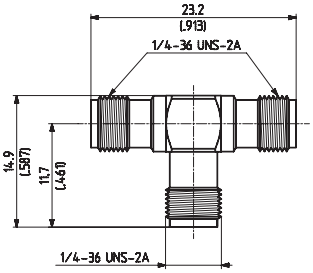
Material	CuBe/gold	

464	H+S type Item no.	33_SMB-SMA-50-1/111_UE 22641727
SMB SMA	plug (m) jack (f)	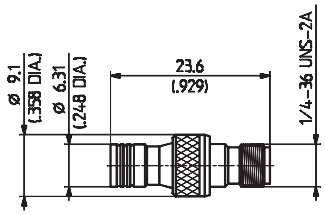
Material		
SMB	brass/gold	
SMA	CuBe/gold	
VSWR	DC to 4 GHz	≤ 1.05 + 0.04 • f (GHz)

Introduction and general information on page 485 and 486/487.

L'IMPULSION
Retrouvez nous sur
www.limpulsion.fr

Adaptors

469	H+S type Item no.	29118 80310703
SMA SSMA	jack (f) jack (f)	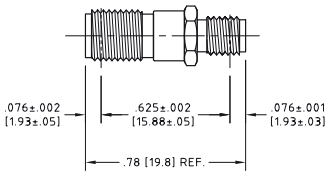
Material	stainless steel (passivated)	
VSWR	DC to 18 GHz	≤ 1.15

469	H+S type Item no.	29119 80310704
SMA SSMA	plug (m) jack (f)	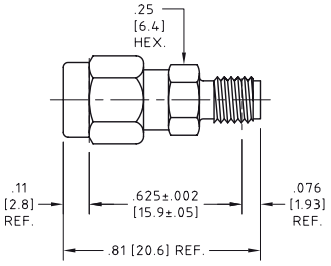
Material	stainless steel (passivated)	
VSWR	DC to 18 GHz	

469	H+S type Item no.	29120 80310705
SSMA SMA	plug (m) jack (f)	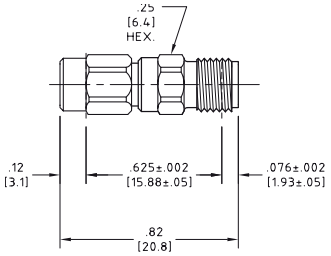
Material	stainless steel (passivated)	
VSWR	DC to 18 GHz	≤ 1.15

469	H+S type Item no.	29121 80310706
SSMA SMA	plug (m) plug (m)	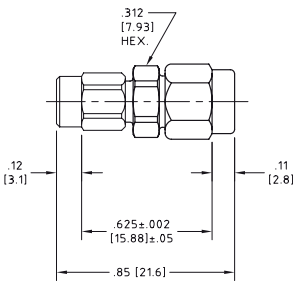
Material	stainless steel (passivated)	
VSWR	DC to 18 GHz	≤ 1.15

470	H+S type Item no.	31_SMA-TNC-50-1/1--_UE 22640941
SMA TNC	jack (f) jack (f)	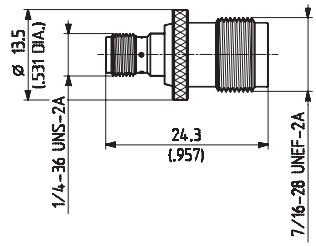
Material SMA TNC	 CuBe/gold brass/SUCO	
VSWR	DC to 2 GHz 2 to 6 GHz 6 to 11 GHz	≤ 1.10 ≤ 1.20 ≤ 1.30

470	H+S type Item no.	32_SMA-TNC-50-1/1--_UE 22640938
SMA TNC	plug (m) plug (m)	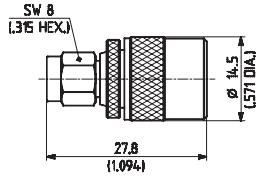
Material SMA TNC	 CuBe/gold brass/SUCO	
VSWR	DC to 4 GHz 4 to 8 GHz 8 to 11 GHz	≤ 1.10 ≤ 1.20 ≤ 1.30

470	H+S type Item no.	33_SMA-TNC-50-1/1--_NE 22640939
SMA TNC	plug (m) jack (f)	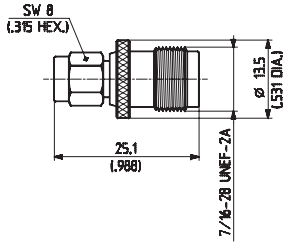
Material SMA TNC	 CuBe/gold brass/SUCO	
VSWR	DC to 6 GHz 6 to 11 GHz	≤ 1.03 + 0.05 • f (GHz) ≤ 1.33

470	H+S type Item no.	33_ TNC-SMA-50-1/1--_UE 22640940
TNC SMA	plug (m) jack (f)	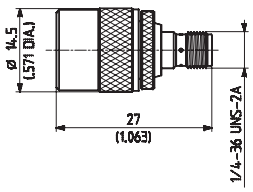
Material TNC SMA	 brass/SUCO CuBe/gold	
VSWR	DC to 4 GHz 4 to 8 GHz 8 to 11 GHz	≤ 1.10 ≤ 1.20 ≤ 1.30

Introduction and general information on page 485 and 486/487.

L'IMPULSION
Retrouvez nous sur
www.limpulsion.fr

Adaptors

474	H+S type Item no.	31_SMB-50-0-1/111_NE 22640221
SMB	jack (f) 2 ×	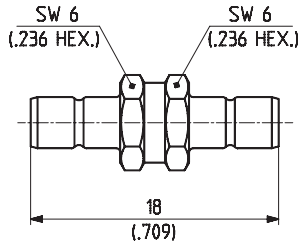
Material	brass/gold	
VSWR	DC to 4 GHz	≤ 1.03 + 0.08 • f (GHz)

474	H+S type Item no.	46_SMB-50-0-2/111_NE 22640228
SMB	jack (f) 3 ×	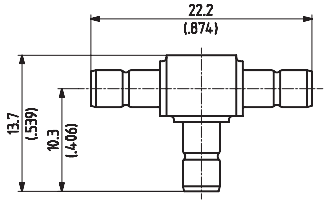
Material	brass/gold	

474	H+S type Item no.	32_SMB-50-0-1/111_NE 22640222
SMB	plug (m) 2 ×	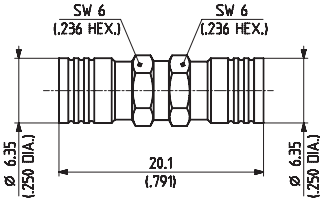
"open entry"		
Material	brass/gold	
VSWR	DC to 1.5 GHz 1.5 to 4 GHz	≤ 1.03 + 0.18 • f (GHz) ≤ 1.30

484	H+S type Item no.	32_SMC-50-0-1/111_NE 22543822
SMC	plug (m) 2 ×	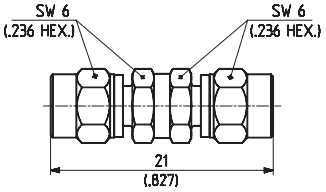
Material	brass/gold	
VSWR	DC to 10 GHz	≤ 1.08 + 0.10 • f (GHz)

474	H+S type Item no.	34_SMB-50-0-2/111_NE 22640224
SMB	jack (f) 2 ×	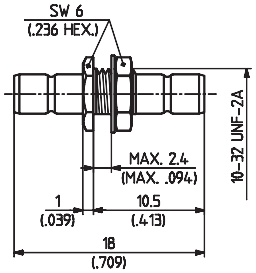
Material Mounting hole	brass/gold ML 11	
VSWR	DC to 2 GHz 2 to 4 GHz	≤ 1.04 + 0.1 • f (GHz) ≤ 1.24

484	H+S type Item no.	34_SMC-50-0-2/111_NE 22640302
SMC	jack (f) 2 ×	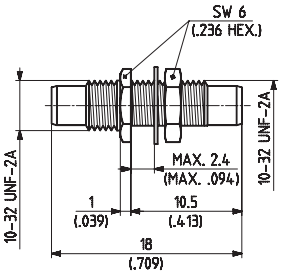
Material Mounting hole	brass/gold ML 11	
VSWR	DC to 10 GHz	≤ 1.03 + 0.08 • f (GHz)

474	H+S type Item no.	43_SMB-50-0-2/111_NE 22640226
SMB	plug (m) 1 × jack (f) 2 ×	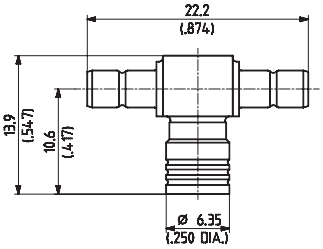
"open entry"		
Material	brass/gold	

484	H+S type Item no.	46_SMC-50-0-2/111_NE 22640307
SMC	jack (f) 3 ×	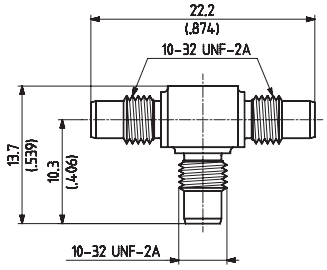
Material	brass/gold	

Introduction and general information on page 485 and 486/487.

L'IMPULSION
Retrouvez nous sur
www.limpulsion.fr

Adaptors

519	H+S type Item no.	31_TNC-50-0-1/133_NE 22640623
TNC	jack (f) 2 ×	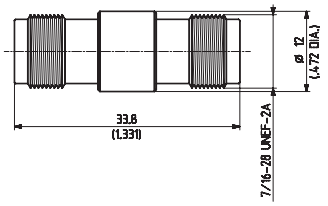
Material	brass/SUCO	
VSWR	DC to 11 GHz	≤ 1.06 + 0.15 • f (GHz)

519	H+S type Item no.	34_TNC-50-0-4/133_NE 22658794
TNC	jack (f) 2 ×	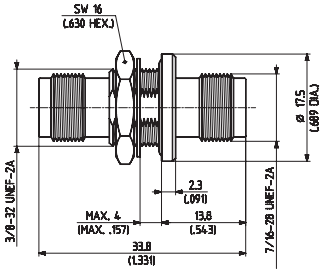
Material Mounting hole	brass/SUCO ML 4	
VSWR	DC to 8 GHz	≤ 1.07 + 0.01 • f (GHz)

519	H+S type Item no.	32_TNC-50-0-1/133_NE 22543407
TNC	plug (m) 2 ×	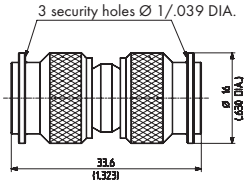
Material	brass/SUCO	
VSWR	DC to 11 GHz	≤ 1.03 + 0.025 • f (GHz)

519	H+S type Item no.	37_TNC-50-0-1/133_NE 22640646
TNC	jack (f) 2 ×	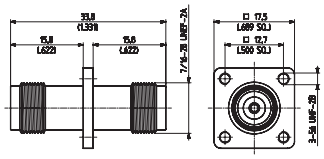
Material Mounting hole Flange	brass/SUCO ML 8 4 threads	
VSWR	DC to 9 GHz 9 to 11 GHz	≤ 1.09 + 0.16 • f (GHz) ≤ 2.53

519	H+S type Item no.	33_TNC-50-0-1/133_NE 22543649
TNC	plug (m) jack (f)	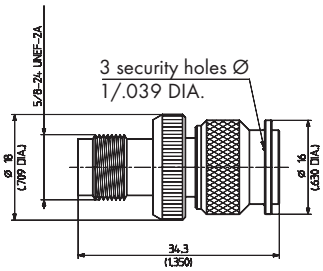
Material	brass/SUCO	
VSWR	DC to 11 GHz:	≤ 1.10 + 0.027 • f (GHz)

519	H+S type Item no.	37_TNC-50-0-2/133_NE 22640648
TNC	jack (f) 2 ×	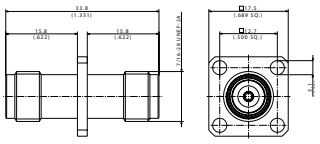
Material Mounting hole Flange	brass/SUCO ML 8 4 holes	
VSWR	DC to 9 GHz 9 to 11 GHz	≤ 1.09 + 0.16 • f (GHz) ≤ 2.53

519	H+S type Item no.	34_TNC-50-0-1/133_NE 22640643
TNC	jack (f) 2 ×	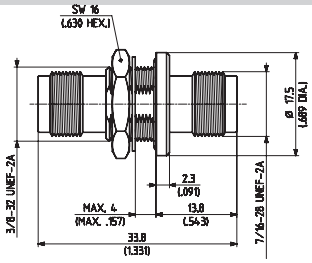
Material Mounting hole	brass/SUCO ML 4	
VSWR	DC to 2 GHz 2 to 8 GHz 8 to 11 GHz	≤ 1.11 ≤ 1.50 ≤ 1.90

519	H+S type Item no.	43_TNC-50-0-1/133_NE 22640651
TNC	jack (f) 2 × plug (m) 1 ×	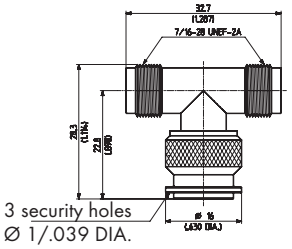
Material	brass/SUCO	

Introduction and general information on page 485 and 486/487.

Adaptors

519	H+S type Item no.	46_TNC-50-0-1/133_NE 22640655
TNC	jack (f) 3 ×	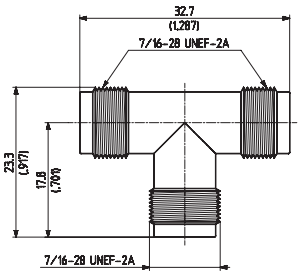
Material	brass/SUCO	

519	H+S type Item no.	53_TNC-50-0-1/133_NE 22640659
TNC	plug (m) jack (f)	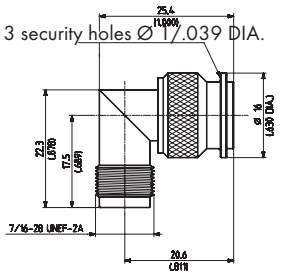
Material	brass/SUCO	
VSWR	DC to 5 GHz 5 to 11 GHz	≤ 1.03 + 0.11 • f (GHz) ≤ 1.58

525	H+S type Item no.	31_4195-716-50-1/133_WE 22658138
4.1/9.5 7/16	jack (f) jack (f)	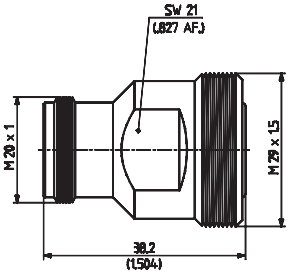
Material	brass/SUCO	
PIM	≤ −165 dBc	

527	H+S type Item no.	32_4310-716-50-X1/133_WE 85017233
4.3-10 7/16	plug (m) plug (m)	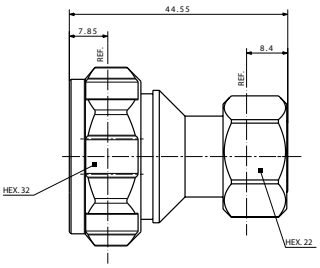
Material	brass/SUCO	
PIM	≤ −166 dBc	

527	H+S type Item no.	33_716_4310-50-1/133_WE 85017213
7/16 4.3-10	plug (m) jack (f)	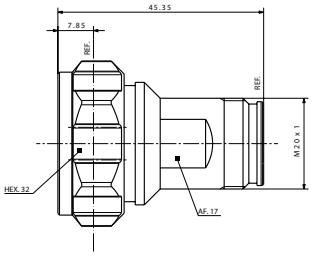
Material	brass/SUCO	
PIM	≤ −166 dBc	

527	H+S type Item no.	33_4310-716-50-X1/133_WE 85017237
4.3-10 7/16	plug (m) jack (f)	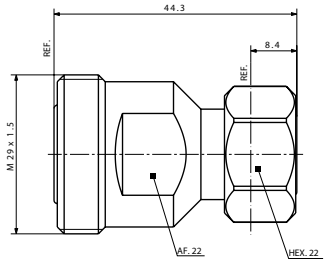
Material	brass/SUCO	
PIM	≤ −166 dBc	

527	H+S type Item no.	33_NEX10-716-50-X1/133_WE 85092478
7/16 4.3-10	plug (m) jack (f)	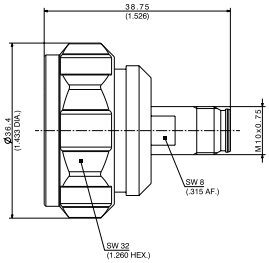
Material	brass/SUCO	
PIM	≤ −166 dBc	

527	H+S type Item no.	33_716-NEX10-50-1/133_WE 85092476
7/16 4.3-10	plug (m) jack (f)	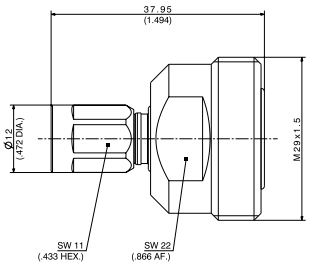
Material	brass/SUCO	
PIM	≤ −166 dBc	

L'IMPULSION
Retrouvez nous sur
www.limpulsion.fr

Adaptors

527	H+S type Item no.	32_4310-716-50-X2/133_WE 85031321
4.3-10 7/16	plug (m) plug (m)	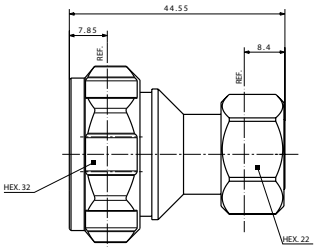
Material	brass/SUCO	
PIM	≤ −155 dBc, typ. −160 dBc	

527	H+S type Item no.	33_4310-716-50-X2/133_WE 85031408
4.3-10 7/16	plug (m) jack (f)	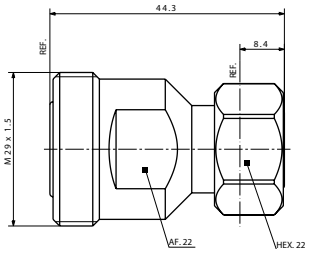
Material	brass/SUCO	
PIM	≤ −155 dBc, typ. −160 dBc	

527	H+S type Item no.	33_716-4310-50-2/133_WE 85031552
7/16 4.3-10	plug (m) jack (f)	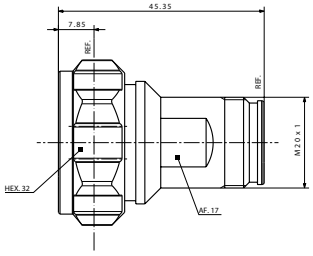
Material	brass/SUCO	
PIM	≤ −155 dBc, typ. −160 dBc	

528	H+S type Item no.	33_716-50-0-1/003_-E 22651577
7/16	plug (m) jack (f)	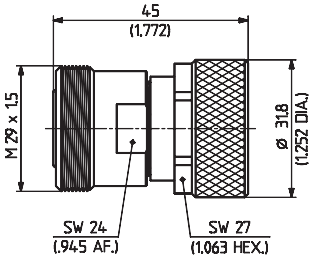
Material	brass/silver	
VSWR	DC to 2 GHz 2 to 4 GHz 4 to 6 GHz	≤ 1.02 ≤ 1.03 ≤ 1.04

528	H+S type Item no.	33_716-50-0-2/133_WE 22658193
7/16	plug (m) jack (f)	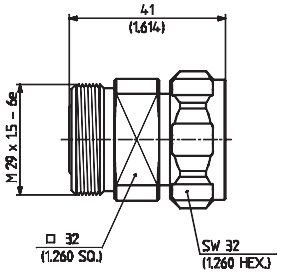
Material	brass/SUCO	
PIM	≤ −165 dBc	

528	H+S type Item no.	34_716-50-0-1/003_-E 22544120
7/16	jack (f) 2 ×	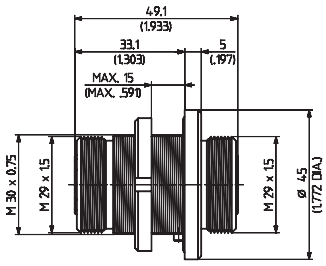
Material Mounting hole	brass/SUCO ML 29	
VSWR	DC to 4 GHz 4 to 7.5 GHz	≤ 1.02 + 0.05 • f (GHz) ≤ 1.22

528	H+S type Item no.	43_716-50-0-1/003_-E 22544572
7/16	jack (f) 2 × plug (m) 1 ×	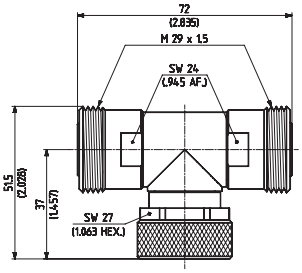
Material	brass/SUCO	

528	H+S type Item no.	46_716-50-0-1/003_-E 22643266
7/16	jack (f) 3 ×	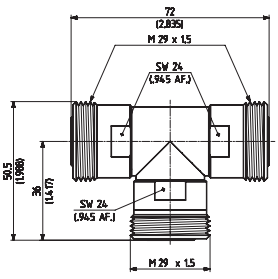
Material	brass/SUCO	

Introduction and general information on page 485 and 486/487.

L'IMPULSION
Retrouvez nous sur
www.limpulsion.fr

Adaptors

528	H+S type Item no.	53_716-50-0-1/003_-E 22641259
7/16	plug (m) jack (f)	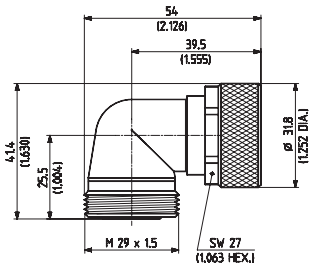
Material	brass/SUCO	
VSWR	DC to 7.5 GHz	≤ 1.02 + 0.025 • f (GHz)

Introduction and general information on page 485 and 486/487.

L'IMPULSION | Retrouvez nous sur www.limpulsion.fr

Assembly tools

Crimping tools and inserts for flexible cables 532

Tool sets for Semi-rigid cable assembling (solder type) 536

N, PC7, BNC, TNC, tool set for semi-rigid cable assembling 538

SMA tool set for semi-rigid cable assembling 540

Soldering tool and soldering support 542

Selection of common and helpful assembly tools 543

Torque wrenches 549

L'IMPULSION
Retrouvez nous sur
www.limpulsion.fr

Crimping tools and inserts for flexible cables

Small crimp tool, «K» with interchangeable inserts 1/2/A, 2/B , 2/C



Fig. 1



Fig. 2

HUBER+SUHNER type	Item no.	Description	Fig.
75_Z-0-0-50	22544754	tool without inserts	1
75_Z-0-0-51	22544755	tool with various inserts 1/2/A, 2/B , 2/C in wooden box	2

Interchangeable inserts for small crimp tool

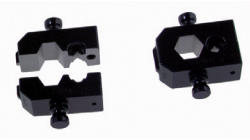

HUBER +SUHNER type	Item no.	Cavity ID	Square cavity size for centre contact mm	Hexagonal cavity size for outer contact mm
76_Z-0-1-1	23000884	0.54/A	0.54	3.3
76_Z-0-2-20	22645153	1/4.95	0.75	4.95
76_Z-0-2-51	22544756	1/2/A	0.74/1.58	3.3
76_Z-0-2-53	22645337	1/2.67	0.75	2.67
76_Z-0-3-51	22544757	2/B	1.58	5.5
76_Z-0-4-51	22544758	2/C	1.58	6.5

L'IMPULSION
Retrouvez nous sur
www.limpulsion.fr

Crimping tools and inserts for flexible cables

Large crimp tool, «G» with interchangeable inserts 1/2/A, 2/B, 2/C, 3/D

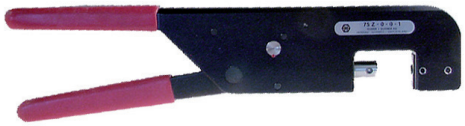

Fig. 1



Fig. 2

HUBER+SUHNER type	Item no.	Description	Fig.
75_Z-0-0-1	22543157	tool without inserts	1
76_Z-0-0-15	22543177	tool with various inserts 1/2/A, 2/B, 2/C, 3/D and cutting insert in wooden box	2

Tool boxes



HUBER+SUHNER type	Item no.	Description
76_Z-0-0-9	22644671	large tool box (empty)
76_Z-0-0-11	22543175	large tool box without tooling but including foam insert for tools and allen key

Table press with interchangeable inserts



HUBER+SUHNER type	Item no.	Description
75_Z-0-0-2	22543158	press without inserts (for inserts see page 534)

L'IMPULSION
Retrouvez nous sur
www.limpulsion.fr

Crimping tools and inserts for flexible cables

Interchangeable inserts fitting large crimp tool and table press



HUBER +SUHNER type	Item no.	Cavity ID	Square cavity size for centre contact mm	Hexagonal cavity size for outer contact mm
76_Z-0-1-2	23000885	0.54/A	0.51	3.3
76_Z-0-2-1	22543181	1/2/A	0.74/1.58	3.3
76_Z-0-2-8	22544191	1/4.95	0.7	4.95
76_Z-0-3-1	22543185	2/B	1.58	5.5
76_Z-0-3-9	22641133	1.22/1.22/B	1.20/1.20	5.5
76_Z-0-4-1	22543189	2/C	1.58	6.5
76_Z-0-4-8	22543190	1.22/1.22/C	1.20/1.20	6.5
76_Z-0-5-8	22543192	1.22/1.22/8	1.20/1.20	8
76_Z-0-5-21	22543193	2/8.0	1.58	8
76_Z-0-6-1	22649051	3/8.65	2.38	8.65
76_Z-0-6-21	22543194	2/9.75	1.6	9.75
76_Z-0-7-1	22543195	3/D	2.38	10.7
76_Z-0-7-7	22543196	2/D	1.58	10.7
76_Z-0-7-8	22660322	2.5/D	2.48	10.7
76_Z-0-7-14	22544524	4/D	3.28	10.7
76_Z-0-10-14	23002630	12.4		12.4
76_Z-0-0-26	22645880	1/2.67	0.8	2.73
76_Z-0-3-26	84077169	1.22/B	1.2	5.5
76_Z-0-4-24	84077171	1.22/6.5	1.2	6.5
76_Z-0-5-22	84077161	1.22/8.0	1.2	8
76_Z-0-0-57	85008389	5.5		5.5
76_Z-0-4-23	84074473	C		6.5
76_Z-0-12-1	85009833	14.5		14.5

L'IMPULSION
Retrouvez nous sur
www.limpulsion.fr

Crimping tools and inserts for flexible cables

Special insert and tools for large crimp tool and table press



HUBER+SUHNER type	Item no.	Description
76_Z-0-0-1	22543170	cutting insert for cables up to 12 mm/4.720 in outer diameter
76_Z-0-0-2	22543172	spare blades for cutting insert (10 pieces per package)
76_Z-0-0-3	22543173	support plate for bench mounting of large crimp tool

L'IMPULSION Retrouvez nous sur www.limpulsion.fr

SMA tool set for semi-rigid cable assembling

This tool set includes all tools required for assembling of SMA connectors.

The following additional tools are required for assembling of N and PC7 connectors to cables semi-rigid 0.141 and 0.086: 74_Z-0-3-29, 74_Z-0-0-35, 74_Z-0-0-66, 74_Z-0-0-67, 74_Z-0-3-4.

All tolls and replacement parts can be ordered individually. The individual tools can also be used with the large soldering fixture W442, HUBER+SUHNER type 74_Z-0-0-442, to be ordered separatly.



HUBER+SUHNER type	Item no.	Description	Packaging	Weight
74_Z-0-0-70	22544725	large tool set for SMA semi-rigid cable assembling	wooden box 366×188×51 mm	1.41 kg

Small tool set see 74_Z-0-0-72.

Content of set

HUBER+SUHNER type	Item no.	W-no. *	Description	Qty
74_Z-0-3-2	22543148	W3-2	stripping gauge for insulation semi-rigid 0.0141	1
74_Z-0-0-14	22543124	W14	locator tool, male and female	1
74_Z-0-0-21	22543130	W21	torque wrench Ncm 100	1
74_Z-0-0-52	22544553	W52	dielectric insertion tool, for plugs	1
74_Z-0-0-53	22544554	W53	dielectric insertion tool, for jacks	1
74_Z-0-0-54	22544555	W54	contact holder for pins and sockets	1
74_Z-0-0-55	22544516	W55	soldering gauge 0.25mm	1
74_Z-0-0-56	22544517	W56	soldering gauge 0.4mm	1
74_Z-0-0-58	22544557	W58	soldering fixture	1
74_Z-0-0-59	22544558	W59	clamping inserts for semi-rigid 0.141, used with W58	2
74_Z-0-0-60	22544559	W60	clamping inserts for semi-rigid 0.086, used with W58	2
74_Z-0-0-63	22544562	W63	trim tool, for plugs without pin	1
74_Z-0-0-68	22544715	W68	1 set of blades with protector	1
74_Z-0-0-81	22641423	W81	positioner for W164 assembling of coupling nuts (SMA)	1
74_Z-0-0-142	22643462	W142	trim tool for removal of extended dielectric	1
74_Z-0-0-157	22643029	W157	cable stripping tool	1
74_Z-0-0-164	22643028	W164	trim tool for centre contact	1
74_Z-0-0-368	23021264	W368	locator tool, used with W58	1
74_Z-0-0-369	23021266	W369	locator tool, used with W58	1

* Idendification marked on tool and referenced in assembling instruction, abbreviated notation derived from the HUBER+SUHNER type e.g. W58 from 74_Z-0-0-58.

L'IMPULSION | Retrouvez nous sur www.limpulsion.fr

SMA tool set for semi-rigid cable assembling

Assembly instruction for semi-rigid cables and SMA connectors

DOC-0000178687 for female connectors
DOC-0000179086 for male connectors

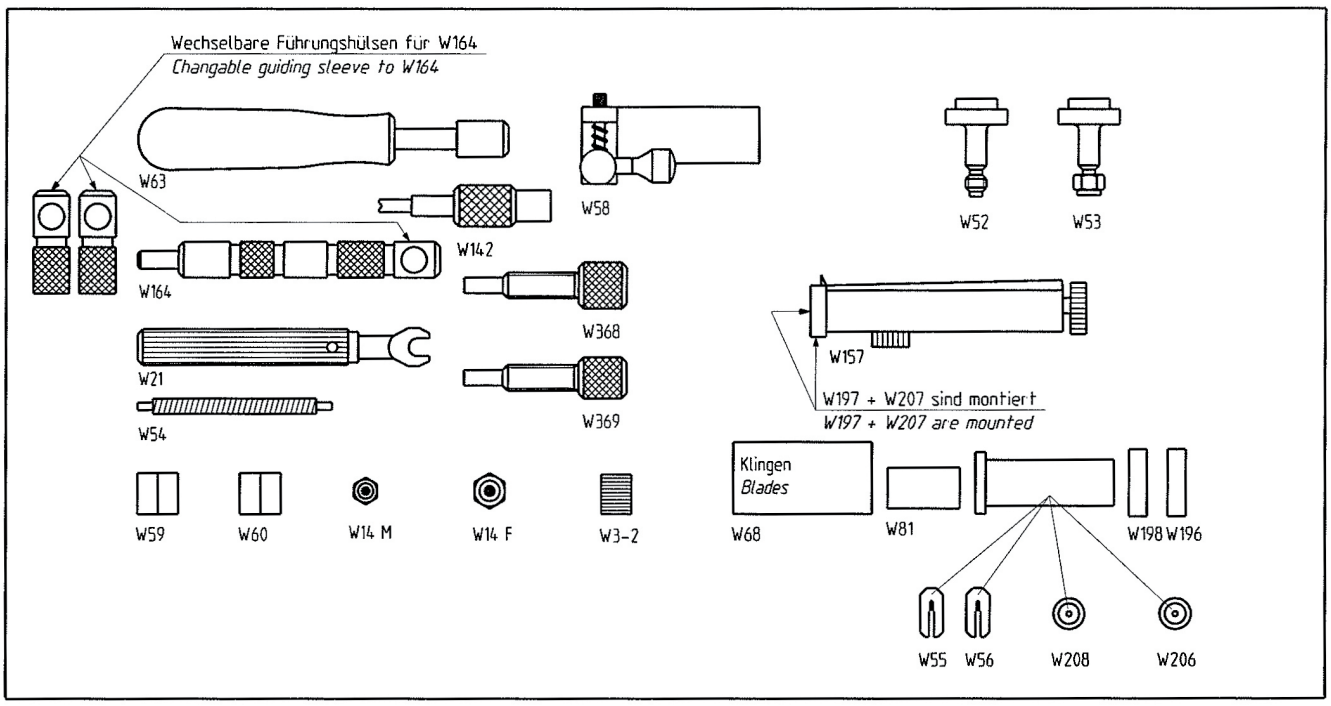

L'IMPULSION
Retrouvez nous sur
www.limpulsion.fr

N, PC7, BNC, TNC, tool set for semi-rigid cable assembling

This tool set includes all tools required for assembling of N, PC7, BNC, TNC connectors.

All tolls and replacement parts can be ordered individually.

The individual tools can also be used with the large soldering fixture W442 HUBER+SUHNER type 74_Z-0-0-442, to be ordered separatly.



HUBER+SUHNER type	Item no.	Description	Packaging	Weight
74_Z-0-0-71	22641350	N, PC7, BNC, TNC, tool set for semi-rigid cable assembling	wooden box 366×188×51 mm	1.22 kg

Content of set

HUBER+SUHNER type	Item no.	W-no. *	Description	Qty
74_Z-0-3-2	22543148	W3-2	stripping gauge for insulation semi-rigid 0.141	1
74_Z-0-3-4	22543150	W3-4	trim tool for remove protruding dielectric semi-rigid 0.141	1
74_Z-0-0-29	22543138	W29	dialectric insertion tool for insulators	1
74_Z-0-0-35	22544282	W35	soldering gauge 0.45 mm/0.018 in	1
74_Z-0-0-58	22544557	W58	soldering fixture	1
74_Z-0-0-59	22544558	W59	clamping inserts for semi-rigid 0.141, used with W58	2
74_Z-0-0-60	22544559	W60	clamping inserts for semi-rigid 0.086, used with W58	2
74_Z-0-0-66	22544616	W66	locator tool	1
74_Z-0-0-67	22544640	W67	contact holder for pins and sockets	1
74_Z-0-0-68	22544715	W68	1 set of blades with protector	1
74_Z-0-0-81	22641423	W81	positioner for assembly of coupling nuts	1
74_Z-0-0-157	22643029	W157	cable stripping tool	1
74_Z-0-0-164	22643028	W164	trim tool for centre contact	1

* Idendification marked on tool and referenced in assembling instruction, abbreviated notation derived from the HUBER+SUHNER type e.g. W58 from 74_Z-0-0-58.

N, PC7, BNC, TNC, tool set for semi-rigid cable assembling

Assembly instruction for semi-rigid cables and N, BNC,TNC, PC7 connectors

DOC-0000180866 for series N connectors
DOC-0000179121 for series BNC – TNC connectors
DOC-0000180866 for series N – PC7 connectors

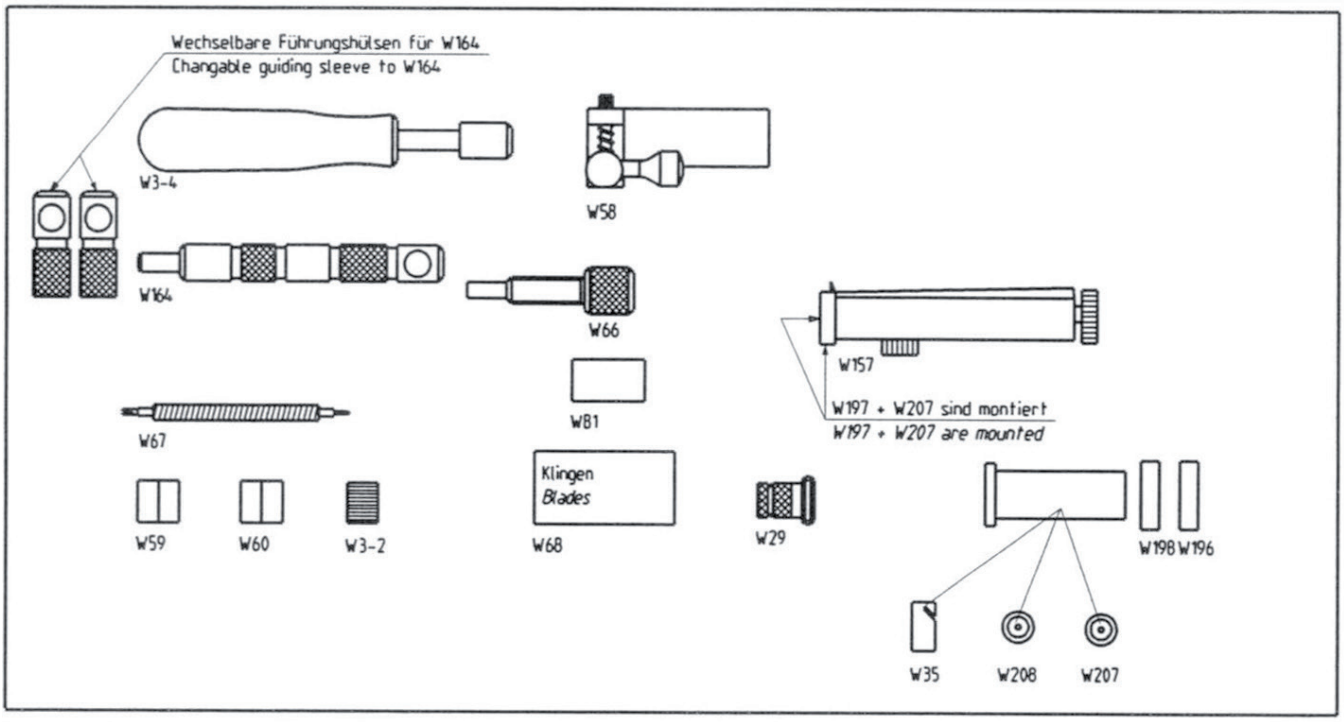

L'IMPULSION
Retrouvez nous sur
www.limpulsion.fr

SMA tool set for semi-rigid cable assembling

This tool set includes all tools required for assembling of SMA connectors.

The following additional tools are required for assembling of N and PC7 connectors to semi-rigid cables 0.141 and 0.086: 74_Z-0-3-2, 74_Z-0-3-4, 74_Z-0-0-29, 74_Z-0-0-35, 74_Z-0-0-66, 74_Z-0-0-67.

All tolls and replacement parts can be ordered individually. The individual tools can also be used with the large soldering fixture W442, HUBER+SUHNER type 74_Z-0-0-442, to be ordered separatly.



HUBER+SUHNER type	Item no.	Description	Packaging	Weight
74_Z-0-0-72	22544747	small tool set for SMA semi-rigid cable assembling	wooden box 366×188×51 mm	1.13 kg

Large tool set see 74_Z-0-0-70.

Content of set

HUBER+SUHNER type	Item no.	W-no. *	Description	Qty
74_Z-0-0-14	22543124	W14	locator tool, male and female	1
74_Z-0-0-52	22544553	W52	dielectric insertion tool, for plugs	1
74_Z-0-0-53	22544554	W53	dielectric insertion tool, for jacks	1
74_Z-0-0-54	22544555	W54	contact holder for pins and sockets	1
74_Z-0-0-55	22544516	W55	soldering gauge 0.25mm	1
74_Z-0-0-56	22544517	W56	soldering gauge 0.4mm	1
74_Z-0-0-58	22544557	W58	soldering fixture	1
74_Z-0-0-59	22544558	W59	clamping Inserts for semi-rigid 0.141, used with W58	2
74_Z-0-0-60	22544559	W60	clamping Inserts for semi-rigid 0.086, used with W58	2
74_Z-0-0-68	22544715	W68	1 set of blades with protector	1
74_Z-0-0-142	22643462	W142	trim tool for removal of extended dielectric	1
74_Z-0-0-157	22643029	W157	cable stripping tool	1
74_Z-0-0-368	23021264	W368	locator tool, used with W58	1
74_Z-0-0-369	23021266	W369	locator tool, used with W58	1

* Idendification marked on tool and referenced in assembling instruction, abbreviated notation derived from the HUBER+SUHNER type e.g. W58 from 74_Z-0-0-58.

SMA tool set for semi-rigid cable assembling

Assembly instruction for semi-rigid cables and SMA connectors

DOC-0000178687 for female connectors
DOC-0000179086 for male connectors

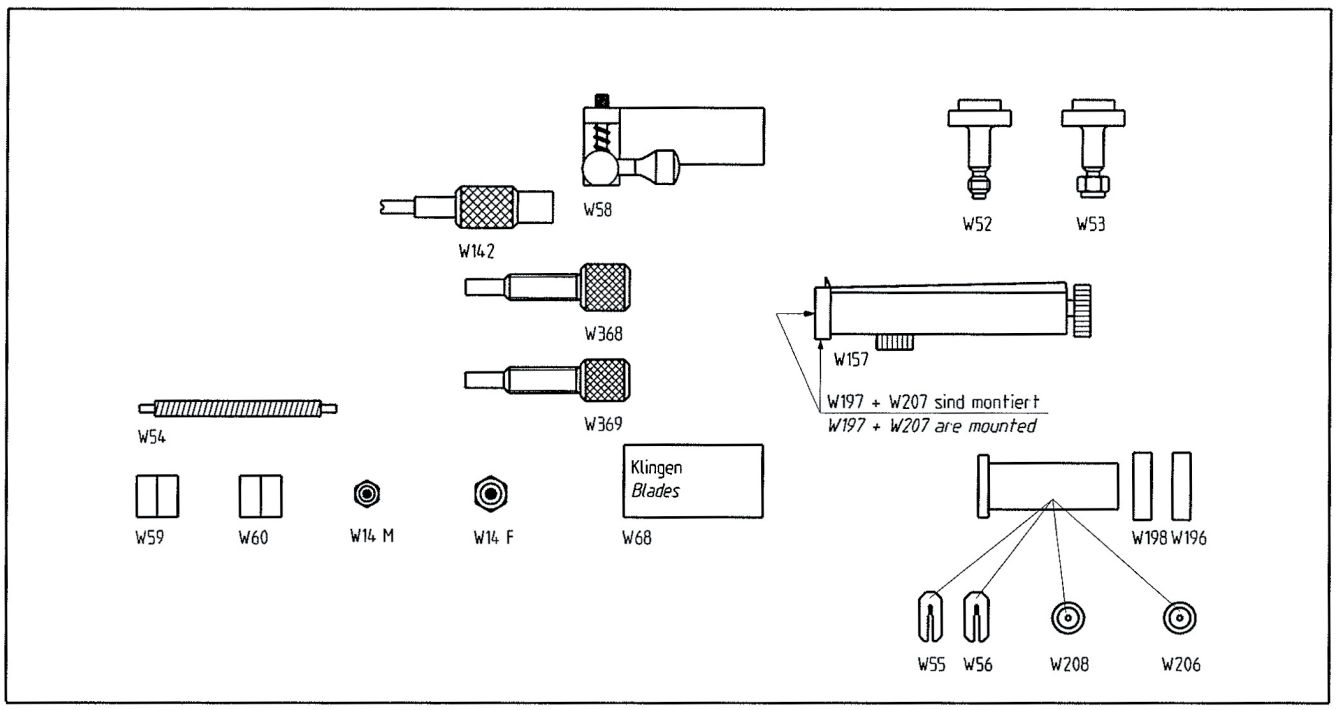

L'IMPULSION
Retrouvez nous sur
www.limpulsion.fr

Soldering tool and soldering support

The soldering tool consist of several different parts.

Depending on the requirement, the individual items can be combined. The parts can be ordered separately.

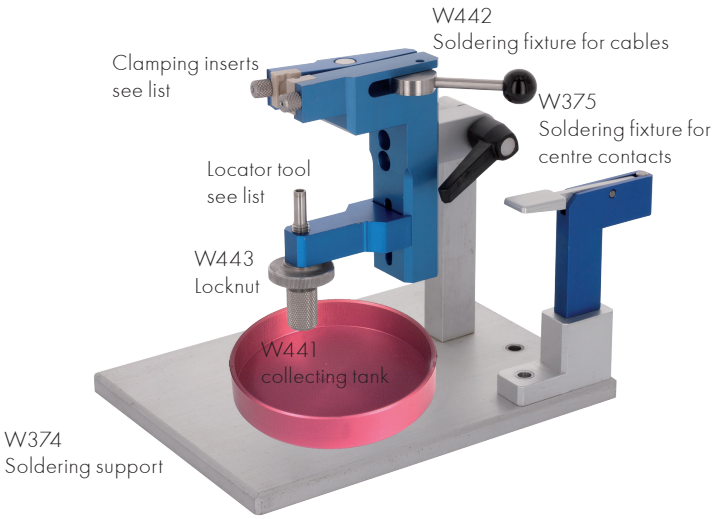

Basic equipment

Large soldering fixture W442
Alternative see small fixture W58

HUBER+SUHNER type	Item no.	W-no.*	Description	Comments
74_Z-0-0-442	23024588	W442	soldering fixture	can also be used without soldering support W374, e.g. mounted/assembling on a table
74_Z-0-0-374	23022146	W374	support for soldering fixture	can be used with the new version of the soldering fixture W58, the new version contents two additional scrwholes
74_Z-0-0-443	23024584	W443	positioning locator tool	for a positioning of the locator tool- free from backflash
74_Z-0-0-441	23024586	W441	collecting tank for coolant or flux	collecting tank for coolant or flux
74_Z-0-0-375	23022145	W375	soldering fixture for centre contacts	supporting tool, to solder the cable into the centre contact

Additional components

Locator tool, adapted for W442/W58
for the approriate connector-interface see list

HUBER+SUHNER type	Item no.	W-no. *	For series
74_Z-0-0-62	22544561	W62	SMA
74_Z-0-0-66	22544616	W66	N
74_Z-0-0-209	22645585	W209	BMA plug
74_Z-0-0-210	22645586	W210	BMA jack
74_Z-0-0-231	22646131	W231	SK plug
74_Z-0-0-232	22646132	W232	SK jack
74_Z-0-0-368	23021264	W368	SMA female
74_Z-0-0-369	23021266	W369	SMA male
74_Z-0-0-390	23035218	W390	QN
74_Z-0-0-391	23035220	W391	QN

Clamping inserts, adapted for W442/W58
for the approriate connector-interface see list

HUBER+SUHNER type	Item no.	W-no. *	For series
74_Z-0-0-59	22544558	W59	BMA, N, SMA, semi-rigid 0.141
74_Z-0-0-60	22544559	W60	BMA, N, SMA, semi-rigid 0.086
74_Z-0-0-133	22643022	W133	BMA, N, SMA, semi-rigid 0.047
74_Z-0-0-233	22646133	W233	SK, semi-rigid 0.118
74_Z-0-0-364	23019268	W364	MULTIFLEX_86
74_Z-0-0-365	23019269	W365	MULTIFLEX_141, SUCOFORM_141

* Idendification marked on tool and referenced in assembling instruction, abbreviated notation derived from the HUBER+SUHNER type e.g. W58 from 74_Z-0-0-58.

Selection of common and helpful assembly tools

HUBER+SUHNER type	Item no.	W-no. *	For series and cables	Description	Works with tool of W-no.	Picture
74_Z-0-0-12	22642718			small hand saw		
74_Z-0-0-13	22644241			replacement saw blade for 74_Z-0-0-12		
74_Z-0-0-14	22543124	W14	SMA	locator tools for contact and insulators		
74_Z-0-0-21	22543130	W21	SMA, PC3.5	torque wrench 100 Ncm		
74_Z-0-0-24	22543133		SMA	tap drill for SMA (1/4-36 UNS-2B thread)		
74_Z-0-0-29	22543138	W29	N	dielectric insertion tool for insulators		
74_Z-0-0-30	22543139		MCX, MMBX	assembly tool for right angle connectors for decoupling and cap mounting		
74_Z-0-0-35	22544282	W35	N	soldering gauge 0.45 mm/0.018 in		
74_Z-0-0-52	22544553	W52	SMA plugs	dielectric insertion tool		
74_Z-0-0-53	22544554	W53	SMA jacks	dielectric insertion tool		
74_Z-0-0-54	22544555	W54	SMA	contact holder for pins and sockets		
74_Z-0-0-55 74_Z-0-0-56	22544516 22544517	W55 W56	SMA SMA	soldering gauge 0.20 mm soldering gauge 0.40 mm	W58/W442 W58/W442	
74_Z-0-0-58	22544557	W58	BMA, SK, N, SMA	soldering fixture	W374/W55/ W56	
74_Z-0-0-59	22544558	W59	BMA, N, SMA, semi-rigid 0.141	clamping inserts	W58/W442	
74_Z-0-0-60	22544559	W60	BMA, N, SMA, semi-rigid 0.086	clamping inserts	W58/W442	

L'IMPULSION Retrouvez nous sur www.limpulsion.fr

Selection of common and helpful assembly tools

HUBER+SUHNER type	Item no.	W-no. *	For series and cables	Description	Works with tool of W-no.	Picture
74_Z-0-0-62	22544561	W62	SMA	locator tool for SMA plugs without pin	W58/W442	
74_Z-0-0-63	22544562	W63	SMA	trim tool for SMA plugs without pin		
74_Z-0-0-66	22544616	W66	N	locator tool	W58/W442	
74_Z-0-0-67	22544640	W67	N	contact holder for pins and sockets		
74_Z-0-0-68	22544715	W68	BMA, SK, N, SMA	1 set of blades with protector		
74_Z-0-0-75	22544807	W75	SK, SMA	assembly tool for hermetic jacks		
74_Z-0-0-81	22641423		SK, SMA	positioner for assembly of coupling nuts		
74_Z-0-0-89	22644721	W89	716	screwdriver for female centre contacts	W79	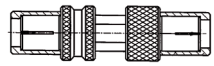
74_Z-0-0-115	22642492			syringe for casting compound capacity 3.5 ccm		
74_Z-0-0-116	22642493			casting compound (set of two tubes: resin and hardener)		
74_Z-0-0-133	22643022	W133	BMA, N, SMA, semi-rigid 0.047	clamping inserts	W58/W442	
74_Z-0-0-142	22643462	W142	SMA	trim tool for removal of extended dielectric		
74_Z-0-0-157	22643029	W157	BMA, SK, N, SMA, semi-rigid 0.047, 0.186, 0.141, SUCOFORM_86 and 141	cable stripping tool		
74_Z-0-0-160	22643514		semi-rigid 0.047, 0.086, 0.141	replacement cutting wheels set	W157	
74_Z-0-0-164	22643028	W164	BMA, N, SMA, semi-rigid 0.086, 0.141	trim tool for centre contacts	W245	
74_Z-0-0-177	22644541	W177	16 SMB, C, S	tool for cap mounting		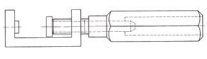

Selection of common and helpful assembly tools

HUBER+SUHNER type	Item no.	W-no. *	For series and cables	Description	Works with tool of W-no.	Picture
74_Z-0-0-196 74_Z-0-0-197 74_Z-0-0-198 74_Z-0-0-397	22645359 22645360 22645361 84005300		semi-rigid 0.047 semi-rigid 0.086 semi-rigid 0.141 semi-rigid 0.118	replacement support cover	W157	
74_Z-0-0-206 74_Z-0-0-207 74_Z-0-0-208	22645364 22645363 22645362		semi-rigid 0.047 semi-rigid 0.086 semi-rigid 0.141	replacement cutting weels	W157	
74_Z-0-0-209	22645585	W209	BMA plug	locator tool	W58/W442	
74_Z-0-0-210	22645586	W210	BMA jack	locator tool	W58/W442	
74_Z-0-0-211	22645591		BMA hermetic seal	soldering fixture for hermetic seal		
74_Z-0-0-213	22645593	W213	BMA	removal tool for receptacles with snap-in mechanism		
74_Z-0-0-214	22645579		BMA hermetic seal	torque wrench 200 Ncm		
74_Z-0-0-225	22645861		MMCX	decoupling and cap mounting		
74_Z-0-0-226	22646136	W226	SK	soldering fixture for glass bead		
74_Z-0-0-227	22646137	W227	SK	soldering fixture for glass bead		
74_Z-0-0-228	22646138	W228	SK	asembling tool for dialectric bead		
74_Z-0-0-229	22646139	W229		tap drill (thread1/4-36 UNS for blind hole thread)		
74_Z-0-0-230	22646130	W230	SK	step drill (only if sliding contacts are not used)		
74_Z-0-0-231	22646131	W231	SK plug	locator tool	W58/W442	
74_Z-0-0-232	22646132	W232	SK jack	locator tool	W58/W442	
74_Z-0-0-233	22646133	W233	SK, semi-rigid 0.118	clamping inserts	W58/W442	
74_Z-0-0-234	22646134	W234	SK, semi-rigid 0.118	replacement cutting wheels	W157	

L'IMPULSION Retrouvez nous sur www.limpulsion.fr

Selection of common and helpful assembly tools

HUBER+SUHNER type	Item no.	W-no. *	For series and cables	Description	Works with tool of W-no.	Picture
74_Z-0-0-235	22646135	W235	SK	step drill (only if sliding contacts are not used)		
74_Z-0-0-238	22646071			tap drill (thread 5/8-24 UNEF)		
74_Z-0-0-246	22646873	W246	SMA	jacket remover for semi-rigid and Sucoform cables, after cutting and braking of jacket	W157/W246	
74_Z-0-0-264	22646290	W264	SK, semi-rigid 0.118	trim tool for centre conductor		
74_Z-0-0-265	22646291	W265	SK	spare blade for W264		
74_Z-0-0-270	22648901	W270	1.0/2.3	removal tool for 1.0/2.3 inserts		
74_Z-0-0-272	22648614		MMCX	decoupling and cap mounting for 11_ MMCX,16_MMCX connectors		
74_Z-0-0-350	23004135		MMCX	removal tool		
74_Z-0-0-360	23023444	W360	QMA	locator tool		
74_Z-0-0-364	23019268	W364	MULTIFLEX_86	clamping inserts	W58/W442	
74_Z-0-0-365	23019269	W365	MULTIFLEX_141, SUCOFORM_141	clamping inserts	W58/W442	
74_Z-0-0-368	23021264	W368	SMA female	locator tool	W58/W442	
74_Z-0-0-369	23021266	W369	SMA male	locator tool	W58/W442	
74_Z-0-0-374	23022146	W374	BMA, SK, SMA, N	support for soldering fixture	W58/W442	

L'IMPULSION
Retrouvez nous sur
www.limpulsion.fr

Selection of common and helpful assembly tools

HUBER+SUHNER type	Item no.	W-no. *	For series and cables	Description	Works with tool of W-no.	Picture
74_Z-0-0-375	23022145	W375	BMA, SK, SMA, N	soldering fixture for centre contacts	W442	
74_Z-0-0-390	23035218	W390	QN	locator tool for 11_QN, 16_QN	W58/W442	
74_Z-0-0-391	23035220	W391	QN	locator tool for 24_QN	W58/W442	
74_Z-0-0-437	23023494		MMBX 32_adapt-ers within series	assembly tool		
74_Z-0-0-441	23024586	W441	BMA, SK, SMA, N	collecting tank for coolant or flux	W374	
74_Z-0-0-442	23024588	W442	BMA, SK, SMA, N	soldering fixture	W374	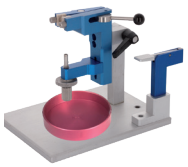
74_Z-0-0-443	23024584	W443	BMA, SK, SMA, N	positioning locator tool	W442	
74_Z-0-0-459	84032400	W459	QMA, QN	decoupling tool for high density application		
74_Z-0-0-461	84029787	W461	QMA waterproof	suitable for semi-rigid cables		
74_Z-0-0-488	84101887	W488	MBX 32- adapters within series	assembly and disassembly tool		
74_Z-0-0-555	84020011	W555	MMPX	decoupling tool (distance washers included)		
74_Z-0-0-556	84031617	W556	MMPX	distance washers (for replacement)		

L'IMPULSION Retrouvez nous sur www.limpulsion.fr

Selection of common and helpful assembly tools

HUBER+SUHNER type	Item no.	W-no. *	For series and cables	Description	Works with tool of W-no.	Picture
74_Z-0-0-557	84032418		MMBX	decoupling tool		
74_Z-0-0-622	85022707	W622	MFBX	coupling tool		
74_Z-0-3-2	22543148	W3-2	SMA, N, semi-rigid 0.141	stripping gauge for insulation		
74_Z-0-3-4	22543150	W3-4	N, semi-rigid 0.0141	trim tool for remove protruding dielectric		

* Idendification marked on tool and referenced in assembling instruction, abbreviated notation derived from the HUBER+SUHNER type e.g. W58 from 74_Z-0-0-58.

Torque wrenches



Box-spanner



Torque wrench (standard style)

HUBER+SUHNER type	Item no.	Suitable for series	Torque Ncm	Opening WAF mm	Notes
74_Z-0-0-504	85020152	4.3-10	500	22.0	standard style
74_Z-0-0-321	22651994	N	100	19.0	standard style
74_Z-0-0-193	22645085	N	100	20.0	standard style
74_Z-0-0-330	22658130	N	100	18.0	standard style
74_Z-0-0-663	85101096	NEX10	150	11.0	standard style
74_Z-0-0-174	22643898	SK	130	8.0	standard style
74_Z-0-0-189	22644368	SK hermetic	200	8.0	standard style
74_Z-0-0-77	22544820	SMA	100	8.0	box spanner style
74_Z-0-0-21	22543130	SMA/PC3.5	100	8.0	standard style
74_Z-0-0-79	22642374	SMA economic	45	8.0	standard style
74_Z-0-0-80	22544821	SMA hermetic	195	7.0	standard style
74_Z-0-0-45	22544232	SMC	30	6.0	standard style
74_Z-0-0-192	22645084	TNC	100	15.0	standard style
74_Z-0-0-373	23021864	TNC	100	14.0	standard style
74_Z-0-0-511	84151106	TNC	260	14.0	standard style

Precision torque wrench

- In plastic box
- With calibration certificate





HUBER+SUHNER type	Item no.	For series	Torque Ncm	Opening WAF mm	Notes
74_Z-0-0-492	84104509	SMA, PC3.5, SK	90	8.0	precision (standard style)

L'IMPULSION
Retrouvez nous sur
www.limpulsion.fr

L'IMPULSION | Retrouvez nous sur www.limpulsion.fr

Accessories

Cable terminators 552

Taper sleeves 554

Insulating washers 556

Solder tags 557

Component container "Sucobox" 558

Accessories for SK connectors 559

Accessories for BMA connectors 559

L'IMPULSION
Retrouvez nous sur
www.limpulsion.fr

Cable terminators

Straight PCB cable terminators

For flexible cables

- Cable entry crimp
- 2.54 mm/0.100 in grid

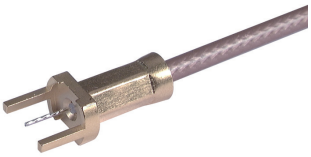

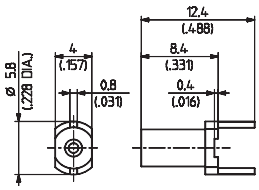

HUBER+SUHNER type	Item no.	Cable group (example)	Packaging	Plating body	Assembly instruction	Mounting hole	Crimp insert
83_CT-0-1-1/-11_NE-1	23013158	U1 (RG_178_B/U, ENVIROFLEX_178)	single	gold	27408	ML 45	A
83_CT-0-2-1/-11_NE	23013159	U2 (RG_316_/U, ENVIROFLEX_316)					
83_CT-0-2-2/-11_NE	23013161	U4 (K_02252_D, ENVIROFLEX_316_D)					

For Semi-rigid cables

- Cable entry soldered
- 2.54 mm/0.100 in grid

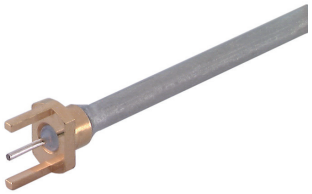

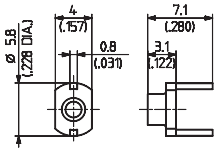

HUBER+SUHNER type	Item no.	Cable group (example)	Packaging	Plating body	Assembly instruction	Mounting hole
83_CT-0-2-4/-11_NE-1 83_CT-0-2-4/-11_NH-1	23013176 23013177	Y3, Y16 (EZ_86)	single bulk 100 pcs.	gold	27410	ML 45

Cable groups see page 32 | Assembly tools see page 515 | Mounting holes/PCB layouts see page 539

Cable terminators

For flexible cables
- Cable entry soldered

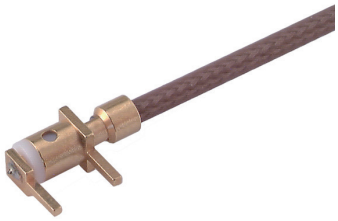

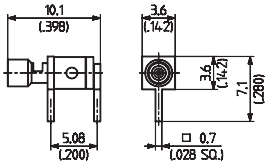

Fig.1

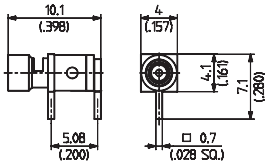

Fig. 2

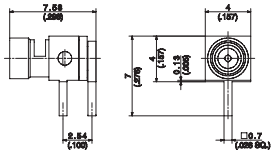

Fig. 3

HUBER+SUHNER type	Item no.	Cable group (example)	Packaging	Plating body	Assembly instruction	Mounting hole	Fig.
86_CT-0-1-1/111_NE	23013202	U1 (RG_178_B/U, ENVIROFLEX_178)	single	gold	27411	ML 100	1
86_CT-0-2-1/111_NH	23013216	U2 (RG_316_/U, ENVIROFLEX_316)	bulk 100 pcs.		27411	ML 100	2
86_CT-0-2-5/111_NH	23016926	U2 (RG_316_/U, ENVIROFLEX_316)	bulk 100 pcs.		27432	ML 164	3

For flexible cables
- Cable entry crimp
- 5.08 mm/0.200 in grid



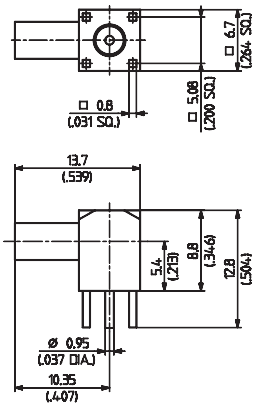

HUBER+SUHNER type	Item no.	Cable group (example)	Packaging	Plating body	Assembly instruction	Mounting hole	Crimp insert
86_CT-0-2-2/111_NE	23013227	U2 (RG_316_/U, ENVIROFLEX_316)	single	gold	27412	ML 15	A

Cable groups see page 32 | Assembly tools see page 515 | Mounting holes/PCB layouts see page 539

L'IMPULSION
Retrouvez nous sur
www.limpulsion.fr

Taper sleeves and suitable assembly tools

Installation recommendation: silicone-containing release agent in spray form to improve the separating and lubricating effect, e.g. ACMOS 70-2406.

- For connectors with cable entry crimp
- Made of EVA (ethylenevinylacetat)
- Temperature resistant –40 to +70 °C/–40 to +158 °F
- Free of halogen
- Recyclable



Cable size examples	RG_196_A/U	RG_188_A/U, RG_179_B/U	G_02232_D, K_02252_D	RG_58_C/U, RG_142_B/U	RG_223_/U, G_03213_D	RG_59_B/U	G_04233_D
Cable group	U1	U2, U5	U4, R8	U7, U11, U12, U13, U9	U14	U16, U17	U18
Taper sleeve dimensions							
Cable entry diameter mm	1.8	2.5	2.9	4.8	5.3	6.0	6.6
Outer diameter mm	6.2	6.2	6.2	10.0	10.0	11.0	11.0
Lenght mm	20	20	20	38	38	38	38
Colour black							
H+S type	78_Z-0-1-1	78_Z-0-2-1	78_Z-0-2-3	78_Z-0-3-4	78_Z-0-3-5	78_Z-0-4-4	78_Z-0-4-5
Item no.	2641162	22544467	22544457	22544408	22641890	22544427	22641673
Colour brown							
H+S type	78_Z-1-1-1	78_Z-1-2-1	78_Z-1-2-3	78_Z-1-3-4	78_Z-1-3-5	78_Z-1-4-4	78_Z-1-4-5
Item no.	22544448	22544468	22544458	22544416	22641664	22544436	22641674
Colour red							
H+S type	78_Z-2-1-1	78_Z-2-2-1	78_Z-2-2-3	78_Z-2-3-4	78_Z-2-3-5	78_Z-2-4-4	78_Z-2-4-5
Item no.	22544449	22544469	22544459	22544415	22641665	22544435	22641675
Colour orange							
H+S type	78_Z-3-1-1	78_Z-3-2-1	78_Z-3-2-3	78_Z-3-3-4	78_Z-3-3-5	78_Z-3-4-4	78_Z-3-4-5
Item no.	22544450	22544470	22544460	22544414	22641166	22544434	22641676
Colour yellow							
H+S type	78_Z-4-1-1	78_Z-4-2-1	78_Z-4-2-3	78_Z-4-3-4	78_Z-4-3-5	78_Z-4-4-4	78_Z-4-4-5
Item no.	22544451	22544471	22544461	22544413	22641667	22544433	22641677
Colour green							
H+S type	78_Z-5-1-1	78_Z-5-2-1	78_Z-5-2-3	78_Z-5-3-4	78_Z-5-3-5	78_Z-5-4-4	78_Z-5-4-5
Item no.	22544452	22544472	22544462	22544412	22641668	22544432	22641678
Colour blue							
H+S type	78_Z-6-1-1	78_Z-6-2-1	78_Z-6-2-3	78_Z-6-3-4	78_Z-6-3-5	78_Z-6-4-4	78_Z-6-4-5
Item no.	22544453	22544473	22544463	22544411	22641669	22544431	22641679
Colour violet							
H+S type	78_Z-7-1-1	78_Z-7-2-1	78_Z-7-2-3	78_Z-7-3-4	78_Z-7-3-5	78_Z-7-4-4	78_Z-7-4-5
Item no.	22544454	22544474	22544464	22544410	22641670	22544430	22641680
Colour grey							
H+S type	78_Z-8-1-1	78_Z-8-2-1	78_Z-8-2-3	78_Z-8-3-4	78_Z-8-3-5	78_Z-8-4-4	78_Z-8-4-5
Item no.	22544455	22544475	22544465	22544409	22641671	22544429	22641681
Colour White							
H+S type	78_Z-9-1-1	78_Z-9-2-1	78_Z-9-2-3	78_Z-9-3-4	78_Z-9-3-5	78_Z-9-4-4	78_Z-9-4-5
Item no.	22544456	22544476	22544466	22544508	22641672	22544428	22641682
Assembly tools							
H+S type	74_Z-0-2-1			74_Z-0-3-6		74_Z-0-4-6	
Tool colour	blue			red		gold	

For more details see: operating instruction DOC-0000270949

Cable groups see page 32 | Assembly tools see page 515 | Mounting holes/PCB layouts see page 539

Taper sleeves and suitable assembly tools

The two types below are available in black only

Cable size examples	RG_213_/U	RG_214_/U
Cable group	U29, U30, U34	U32, U36
Taper sleeve dimensions		
Cable entry diameter mm	10.1	10.7
Outer diameter mm	15.5	15.5
Lenght mm	48	48
Colour black		
H+S type	78_Z-0-7-1	78_Z-0-7-2
Item no.	2641162	22544467
Assembly tool		
H+S type	74_Z-0-7-2	74_Z-0-7-3
Tool colour	grey	black

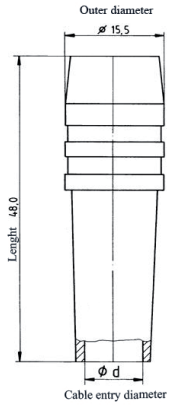

For more details see: operating instruction DOC-0000270949

Assembly tools

H+S type	74_Z-0-2-1	74_Z-0-3-6	74_Z-0-4-6	74_Z-0-7-2	74_Z-0-7-3
Item no.	22543144	22544544	22544543	22641165	22641164
Tool colour	blue	red	gold	grey	black
Suitable tapper sleeve	78_Z-X-1-1 78_Z-X-2-1 78_Z-X-2-3	78_Z-X-3-4 78_Z-X-3-5	78_Z-X-4-4 78_Z-X-4-5	78_Z-0-7-1	78_Z-0-7-2
			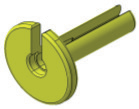		

For more details see: operating instruction DOC-0000270949

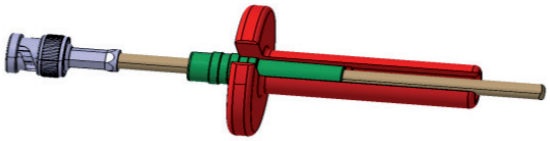

Cable groups see page 32 | Assembly tools see page 515 | Mounting holes/PCB layouts see page 539

L'IMPULSION
Retrouvez nous sur
www.limpulsion.fr

Insulating washers

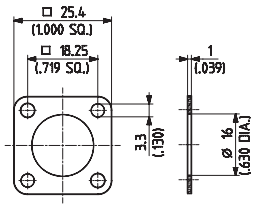

Fig. 1

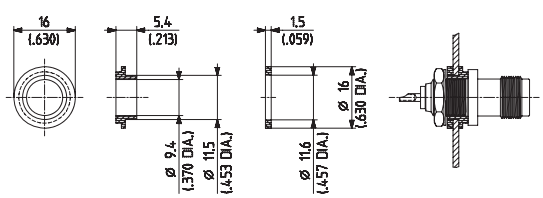

Fig. 2

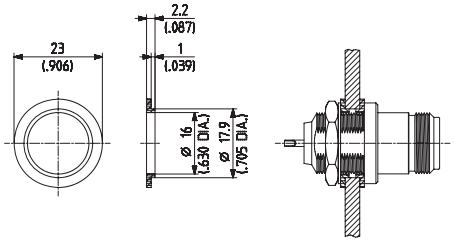

Fig. 3

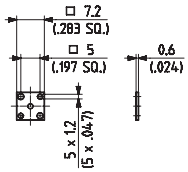

Fig. 4

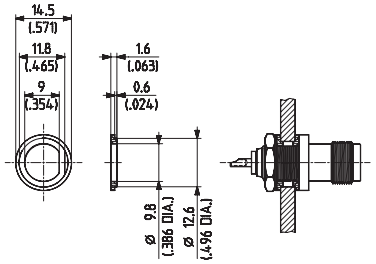

Fig. 5

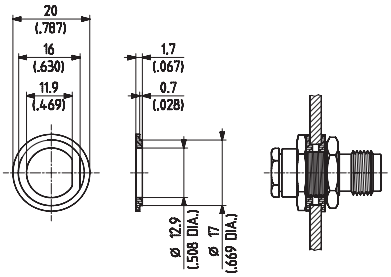

Fig. 6

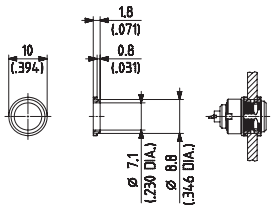

Fig. 7

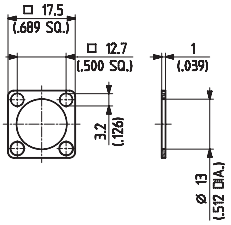

Fig. 8

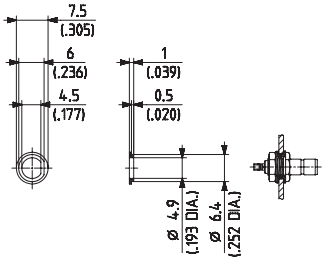

Fig. 9

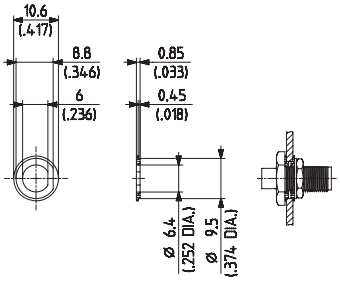

Fig. 10

		Suitable for					
HUBER+SUHNER type	Item no.	Connector pattern*	Connector series	Mounting hole	Material	Fig.	Notes
77_Z-0-0-1/---_-H	22543199	23, 25	N	ML 14	polyamide	1	100 pcs.
77_Z-0-0-2/---_-H	22543200	12, 22	BNC, TNC	ML 102	polyamide	2	**/100 pairs
77_Z-0-0-4/---_-Z	22543202	12,22,24,34	N	ML 113	polyamide	3	**/10 pairs
77_Z-0-0-8/---_-H	22543204	82, 85	SMB/C/S,MCX, QLA 00, SMA	ML 41	PTFE	4	100 pcs.
77_Z-0-0-9/---_-Z	22543205	12, 22	BNC, TNC	ML 4	polycarbonate	5	10 pairs
77_Z-0-0-12/---_-H	22543209	24, 34	BNC, TNC	ML 22	polycarbonate	6	100 pairs
77_Z-0-0-14/---_-Z	22543211	22, 24, 34	QLA 00	ML 114	polyamide	7	**/10 pairs
77_Z-0-0-15/---_-H	22641429	23, 25	BNC, TNC	ML 8	polyethylene	8	100 pcs.
77_Z-0-0-21/---_-Z	22645782	22, 24, 34	SMB/C/S	ML 35	polycarbonate	9	10 pairs
77_Z-0-0-23/---_-Z	22652083	22, 34***	SMA	ML 2	polycarbonate	10	for connectors with ML 35 only/10 pairs

* See connector pattern on page 8p
** Without rotation protection
*** Not all types of pattern 34 are suitable for insulated mounting

Cable groups see page 32 | Assembly tools see page 515 | Mounting holes/PCB layouts see page 539

Solder tags

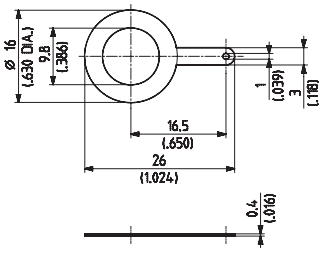

Fig. 1

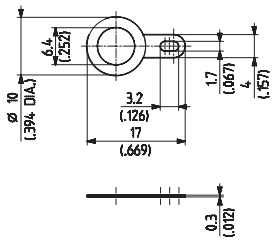

Fig. 2

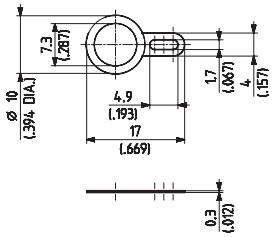

Fig. 3

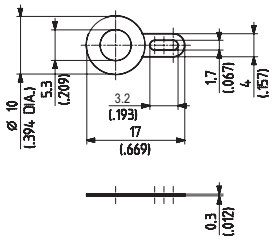

Fig. 4

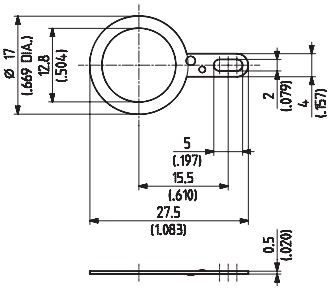

Fig. 5

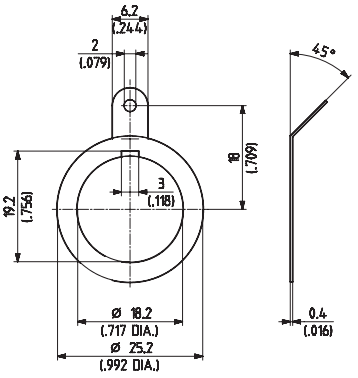

Fig. 6

		Suitable for				
HUBER+SUHNER type	Item no.	Connector pattern*	Connector series	Packaging	Fig.	Notes
72_Z-0-0-1/---_5H	22543029	12, 22	BNC, BNO, BNT, SHV, MHV, TNC	bulk 100 pcs.	1	single ended
72_Z-0-0-6/---_0H	22543036	22, 24, 34	SMA		2	
72_Z-0-0-8/---_5H	22543038	22, 24	QLA 00		3	
72_Z-0-0-9/---_5H	22543039	12, 22, 24, 34	SMB/SMC/SMS, MCX		4	
72_Z-0-0-11/---_5H	22641496	24, 34	BNC, BNO, BNT, SHV, MHV, TNC		5	
72_Z-0-0-13/---_5H	22642507	22, 24, 34	N		6	

* See connector pattern on page 8p

Cable groups see page 32 | Assembly tools see page 515 | Mounting holes/PCB layouts see page 539

L'IMPULSION
Retrouvez nous sur
www.limpulsion.fr

Component container "Sucobox"

The HUBER+SUHNER "Sucobox" is a versatile component container with coaxial input and output connectors or cable entries.

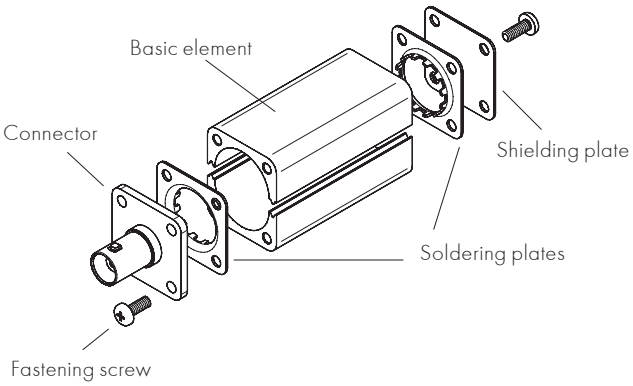

Sucobox

The basic element consists of two similar container parts, two soldering plates for easy soldering of the earthing and 8 tightening screws.

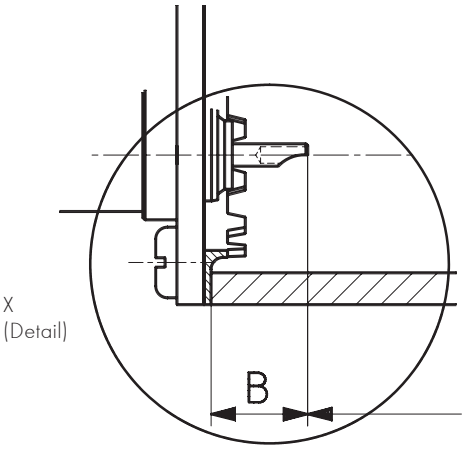

B
Distance between pin end and soldering plate

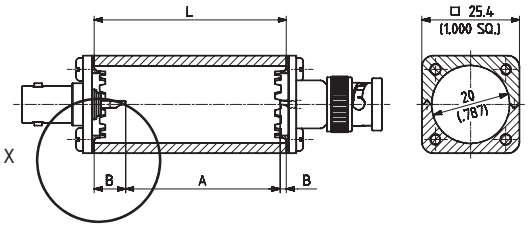

HUBER+SUHNER type	Item no.	Description	Length L	Material	Packaging
66_CB-35-0-1/---_-E	22541510	basic element	35.0 mm/1.38 in	aluminium, anodised, blue	single
66_CB-50-0-1/---_-E	22541514	basic element	50.0 mm/1.97 in	aluminium, anodised, blue	single
72_Z-0-0-5/---_OH	22543035	soldering plate, separate	–	brass, silver plated	bulk 100 pcs.
73_Z-0-0-9/---_-H	22543056	shielding plate, separate	–	brass, silver plated	bulk 100 pcs.

Suitable connectors

HUBER+SUHNER type	Item no.	Connector	Dimension B (see drawing top left)	Packaging
13_BNC-50-0-2/133_NE	22540160	plug	1.5 mm/0.06 in	single
23_BNC-50-0-2/133_NE	22540333	jack	8.0 mm/0.31 in	
13_N-50-0-1/133_NE	22542173	plug	9.0 mm/0.35 in	
23_N-50-0-1/133_NE	22542272	jack	9.0 mm/0.35 in	

Cable groups see page 32 | Assembly tools see page 515 | Mounting holes/PCB layouts see page 539

Accessories for SK connectors

Glass bead for 12_SK-, 13_SK-, 22_SK-, 23_SK-50-0-51 launchers (package with 1 piece).

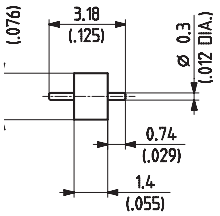

HUBER+SUHNER type	Item no.
73_Z-0-0-203	22645983

Microstrip stress relief contacts (package with 100 pieces).

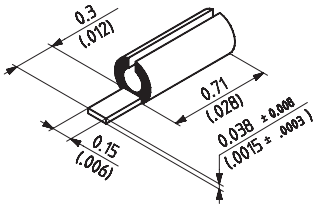

HUBER+SUHNER type	Assembly instruction (M09183)	Item no.
73_Z-0-0-204	DOC-0000191296	22645980

Accessories for BMA connectors

Glass bead for 12_BMA-50-0-3 and 22_BMA-50-0-3.

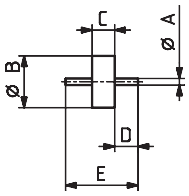

HUBER+SUHNER type	Item no.	A	B	C	D	E
73_Z-0-0-198	22645655	0.5 mm/0.020 in	4.0 mm/0.157 in	1.75 mm/0.069 in	1.8 mm/0.071 in	5.6 mm/0.220 in

Cable groups see page 32 | Assembly tools see page 515 | Mounting holes/PCB layouts see page 539

L'IMPULSION
Retrouvez nous sur
www.limpulsion.fr

Mounting holes and PCB layouts

Dimensions of mounting holes

ML 1

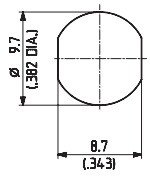

ML 2

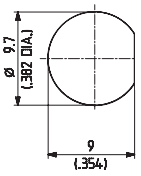

ML 3

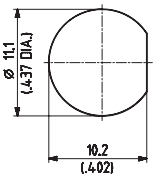

ML 4

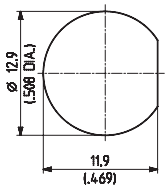

ML 5

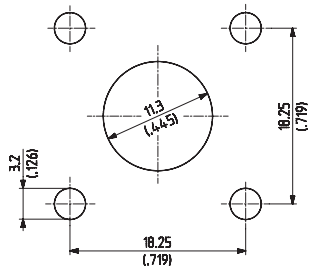

rear panel mounting

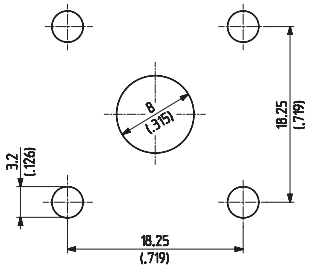

front panel mounting

ML 6

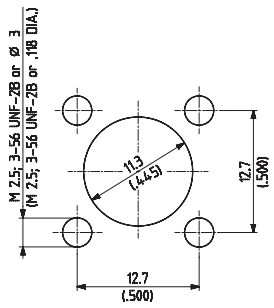

rear panel mounting

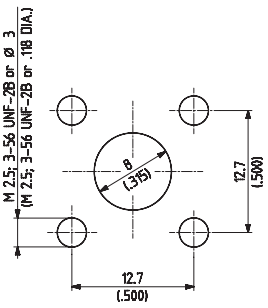

front panel mounting

ML 7

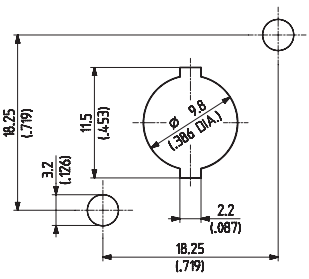

rear panel mounting

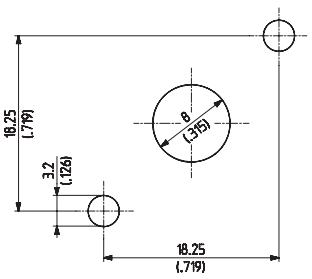

front panel mounting

ML 8

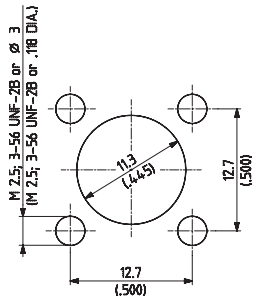

rear panel mounting

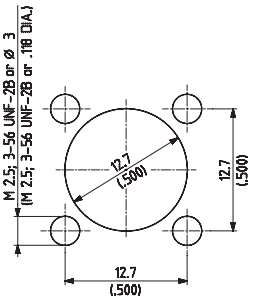

front panel mounting

ML 9

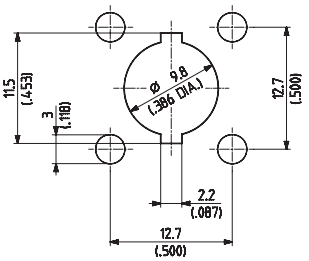

rear panel mounting

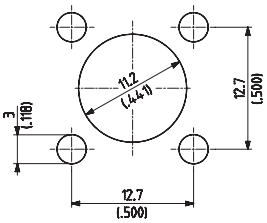

front panel mounting

Mounting holes and PCB layouts

ML 10

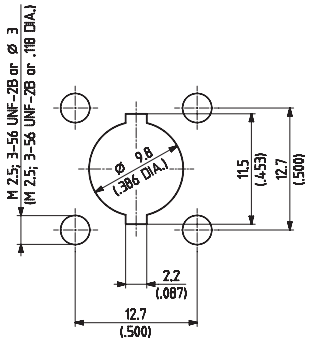

ML 11

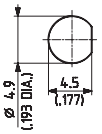

ML 12

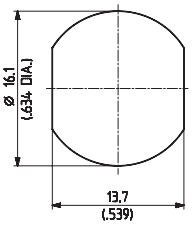

ML 13

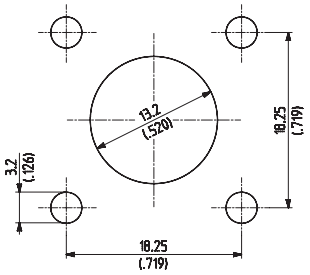

ML 14

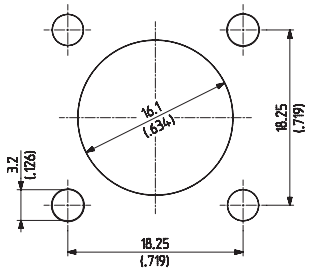

ML 15

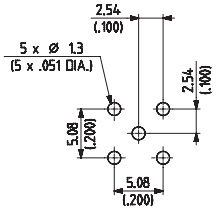

ML 16

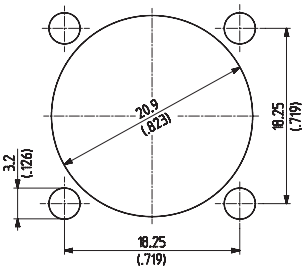

rear panel mounting

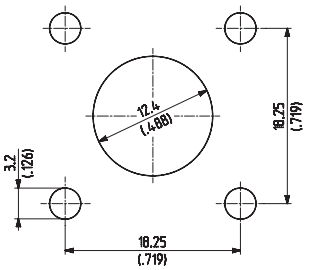

front panel mounting

ML 17

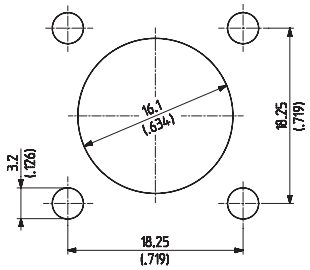

rear panel mounting

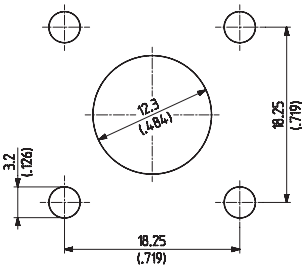

front panel mounting

ML 18

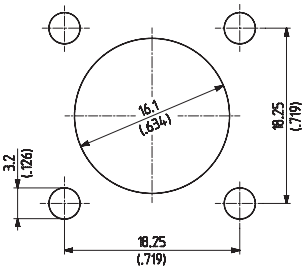

rear panel mounting

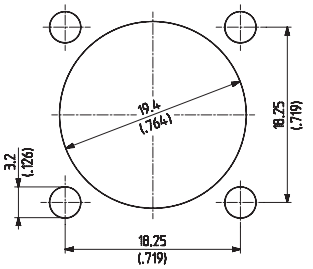

front panel mounting

ML 19

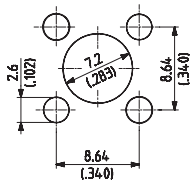

ML 20

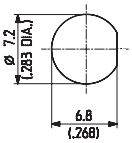

ML 21

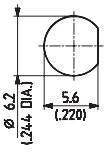

ML 22

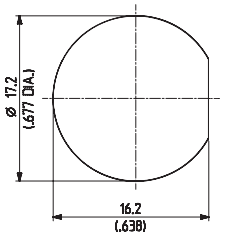

ML 23

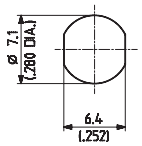

ML 24

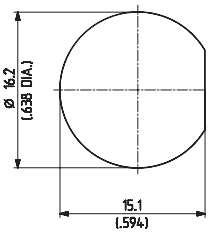

ML 25

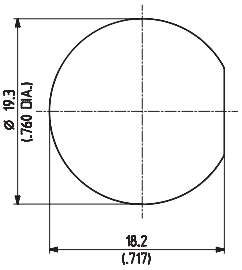

ML 26

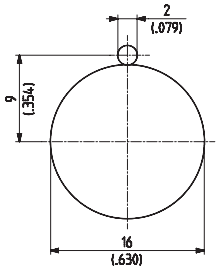

Mounting holes and PCB layouts

ML 27

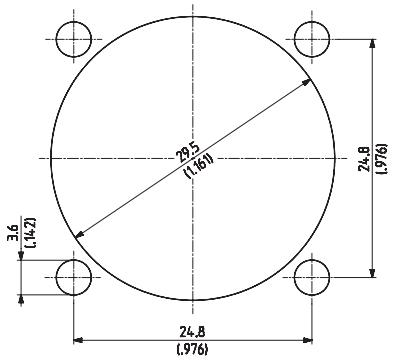

ML 28

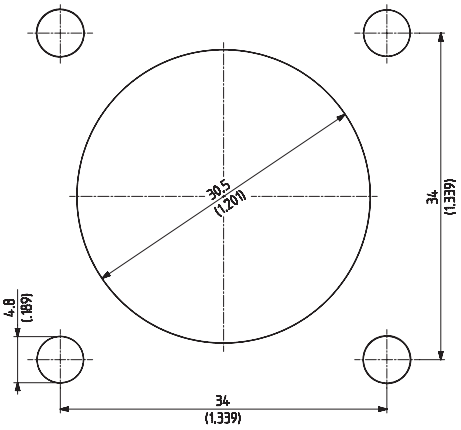

ML 29

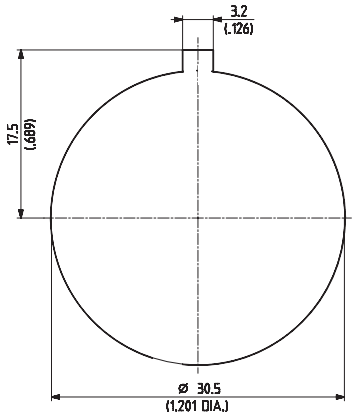

ML 30

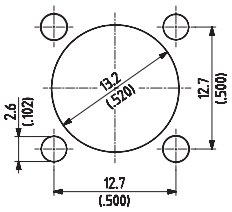

ML 31

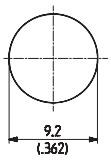

ML 32

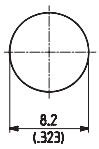

ML 33

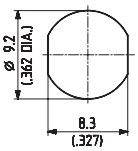

ML 34

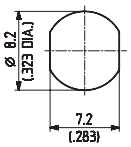

ML 35

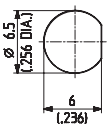

ML 36

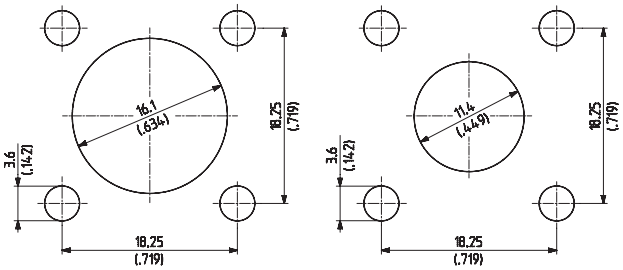

rear panel mounting

front panel mounting

ML 37

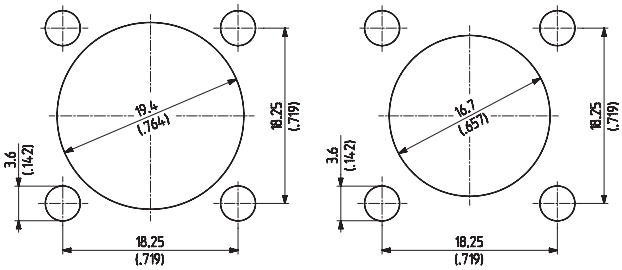

rear panel mounting

front panel mounting

L'IMPULSION
Retrouvez nous sur
www.limpulsion.fr

Mounting holes and PCB layouts

ML 38

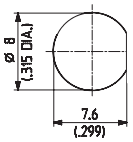

ML 39

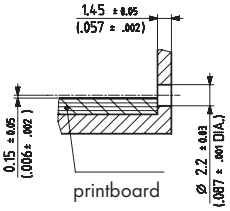

ML 40

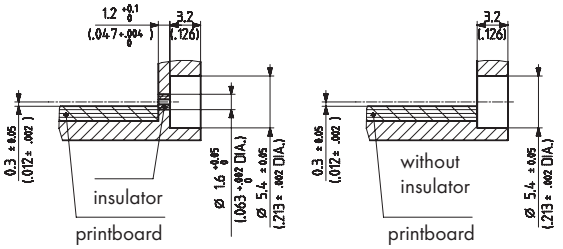

ML 41

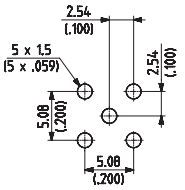

ML 42

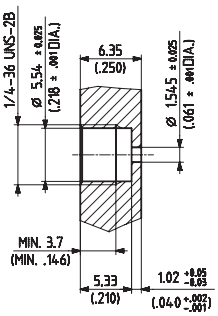

ML 43

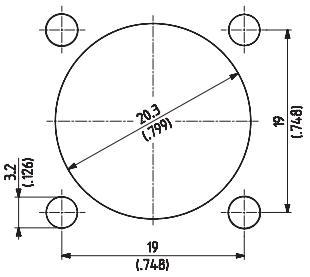

ML 44

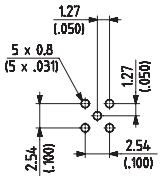

ML 45

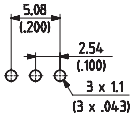

ML 46

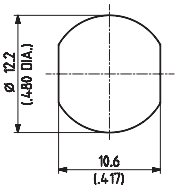

ML 47

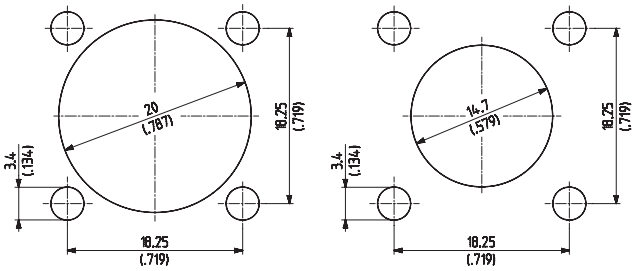

ML 48

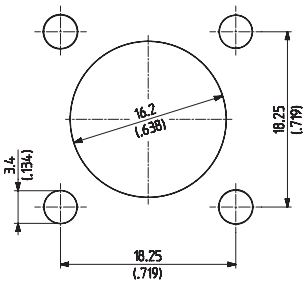

ML 49

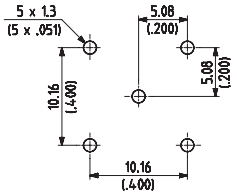

ML 50

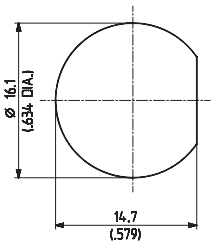

ML 51

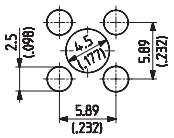

ML 52

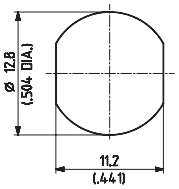

ML 53

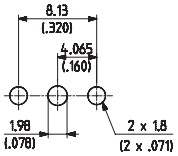

ML 54

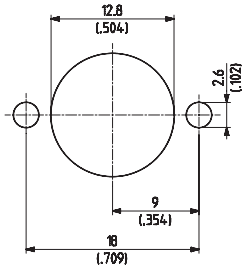

ML 55

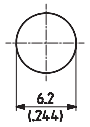

Mounting holes and PCB layouts

ML 56	ML 57	ML 58	ML 59
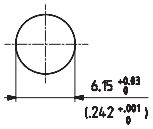	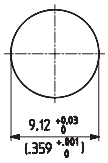	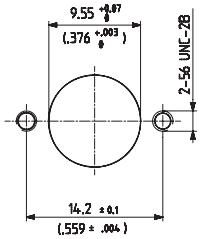	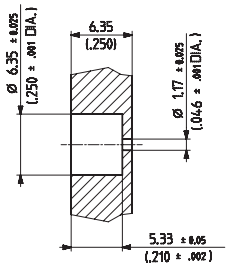
ML 60	**ML 61**	**ML 62**	**ML 63**
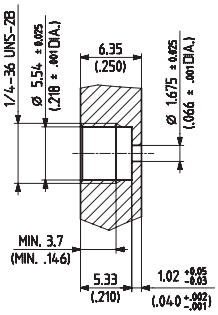	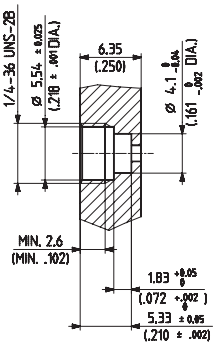	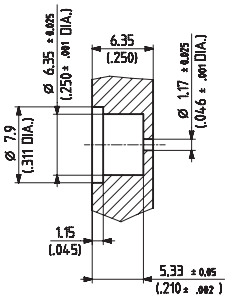	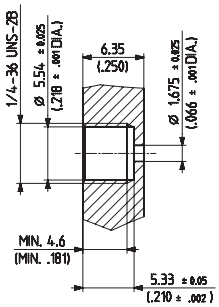
ML 64	**ML 65**	**ML 66**	**ML 67**
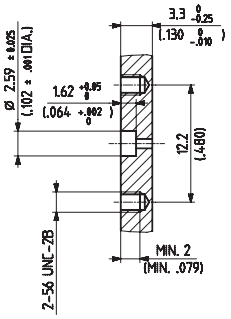	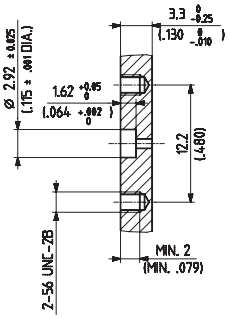	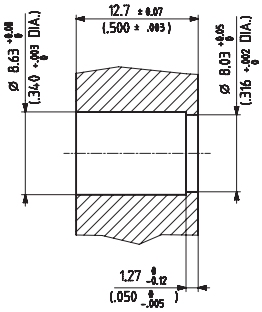	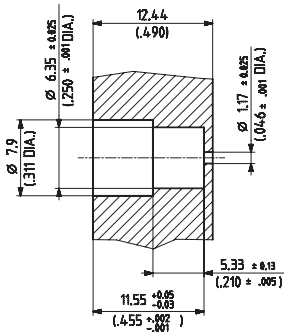
ML 68	**ML 69**	**ML 70**	**ML 71**
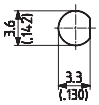	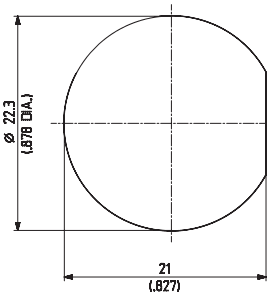	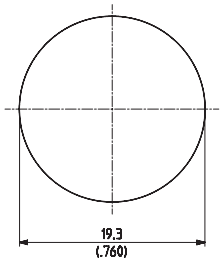	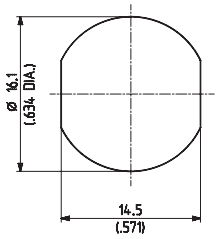

Mounting holes and PCB layouts

ML 72

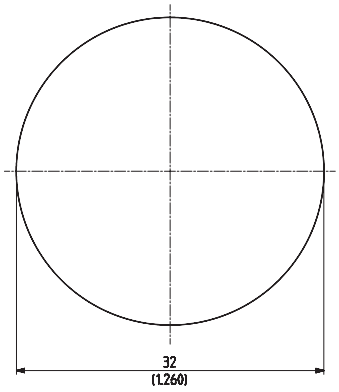

ML 73

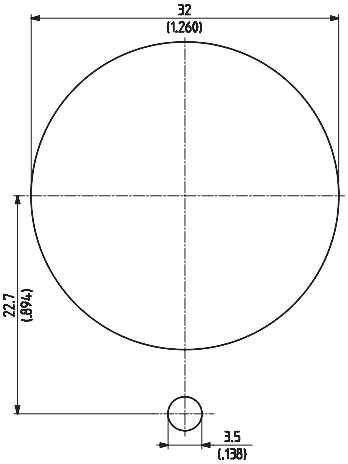

ML 74

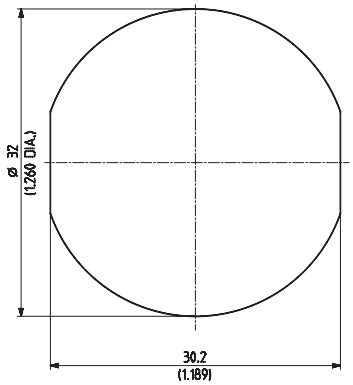

ML 75

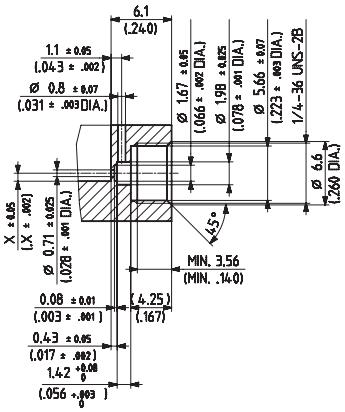

ML 76

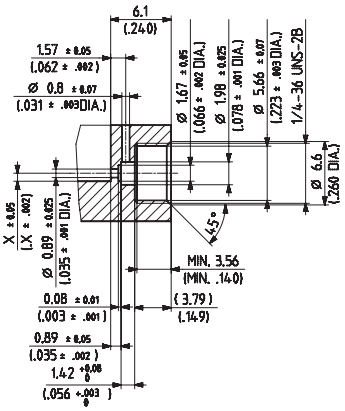

ML 77

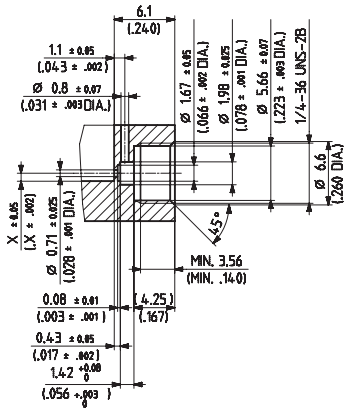

ML 78

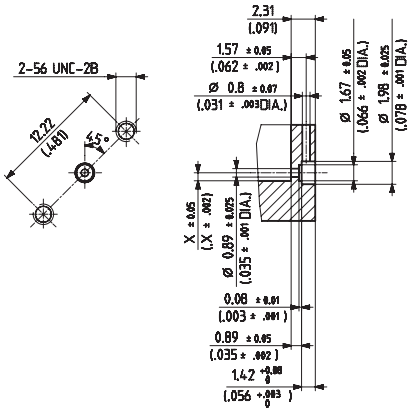

ML 79

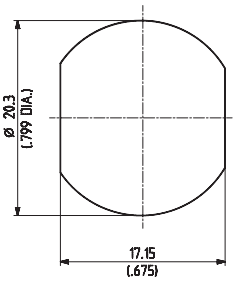

ML 80

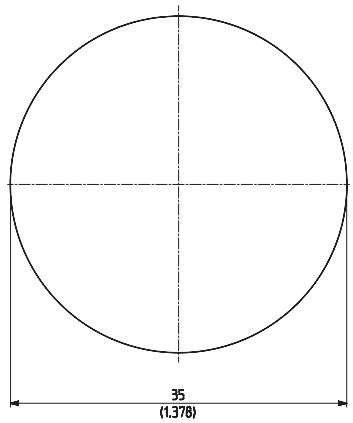

Mounting holes and PCB layouts

ML 81

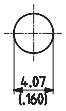

ML 82

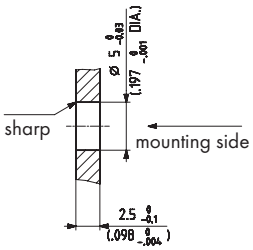

ML 83

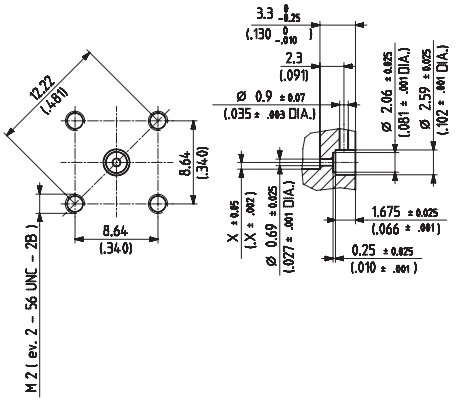

ML 84

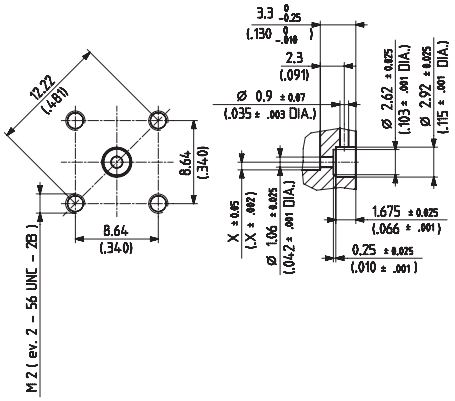

ML 85

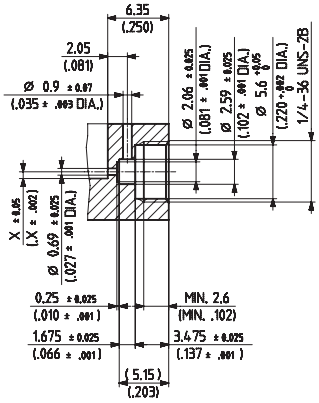

ML 86

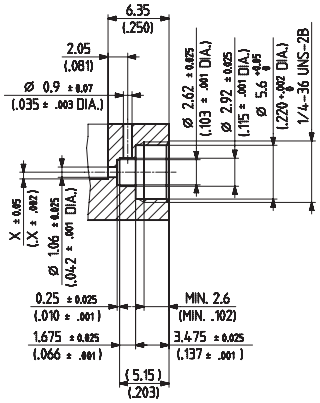

ML 87

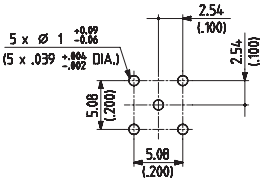

ML 88

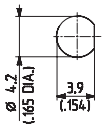

ML 89

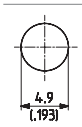

ML 90

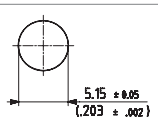

ML 91

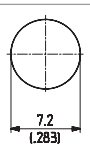

ML 92

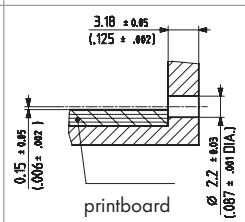

L'IMPULSION
Retrouvez nous sur
www.limpulsion.fr

Mounting holes and PCB layouts

ML 93

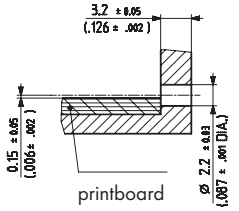

ML 94

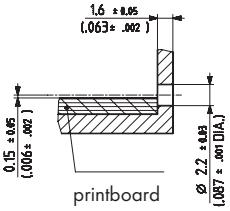

ML 95

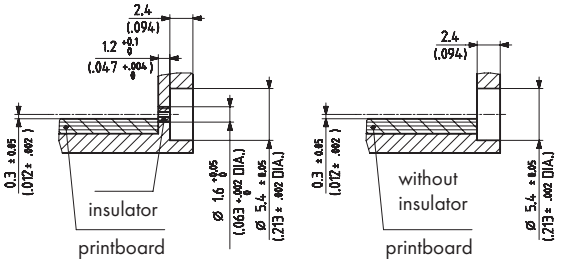

ML 96

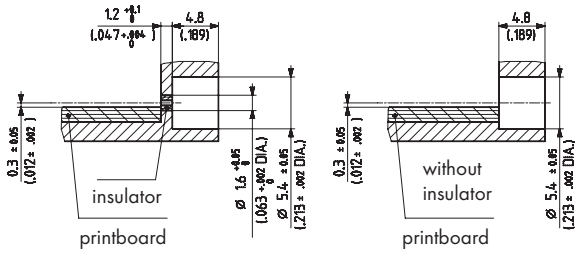

ML 97

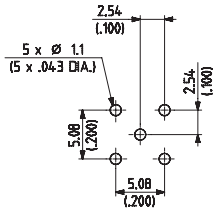

ML 98

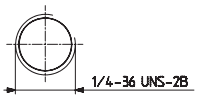

ML 99

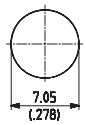

counter sunk from rear

ML 100

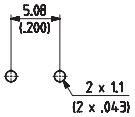

ML 101

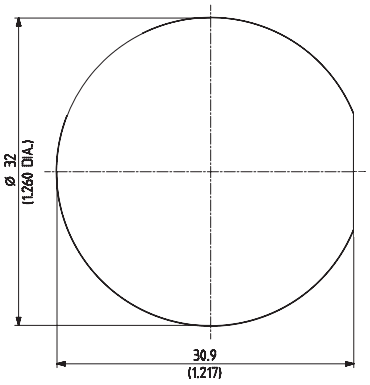

ML 102

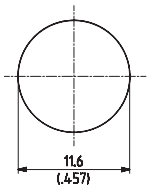

ML 103

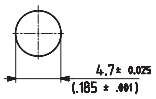

ML 104

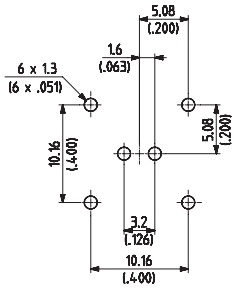

ML 105

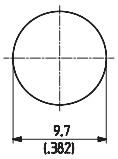

Mounting holes and PCB layouts

ML 106

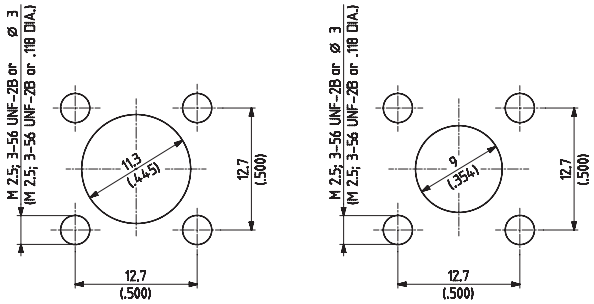

ML 107

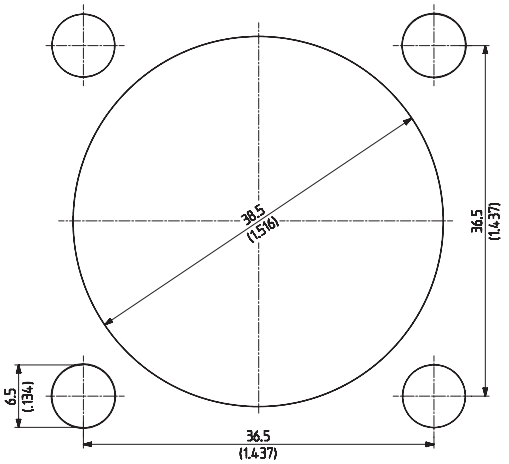

ML 108

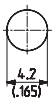

ML 109

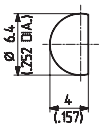

ML 110

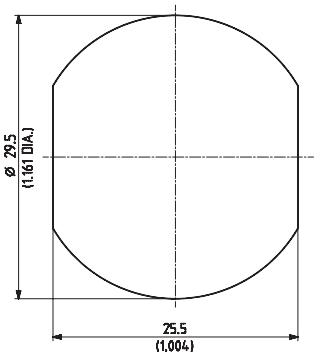

ML 111

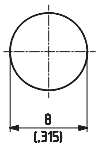

ML 112

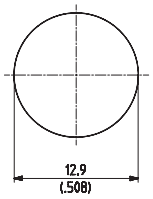

ML 113

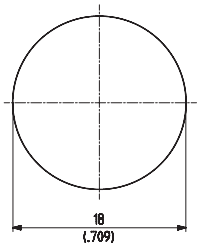

ML 114

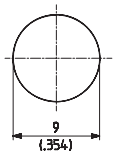

ML 115

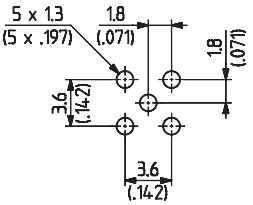

ML 118

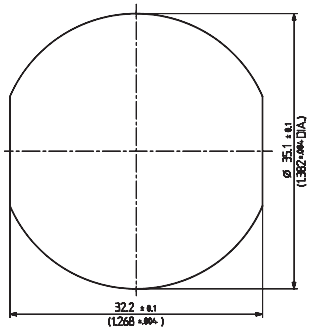

ML 119

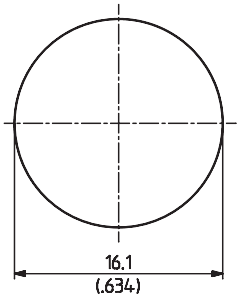

ML 128

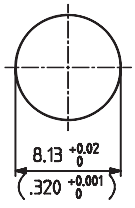

ML 143

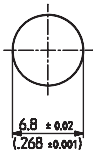

L'IMPULSION
Retrouvez nous sur
www.limpulsion.fr

Mounting holes and PCB layouts

ML 146	ML 164	ML 177	ML 178
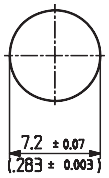	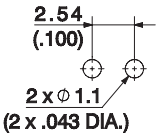	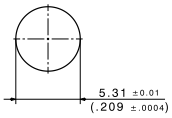	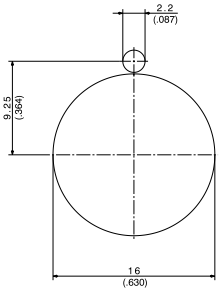

Dimensions of PCB layouts (ML)

ML 120

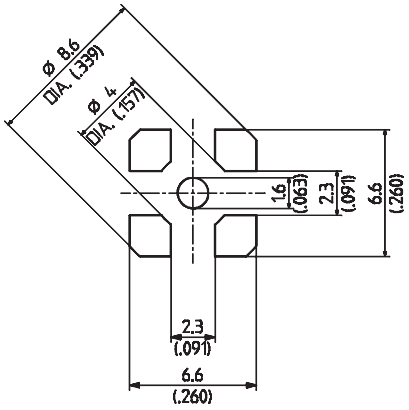

ML 121

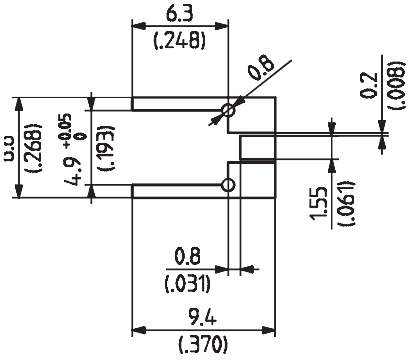

ML 122

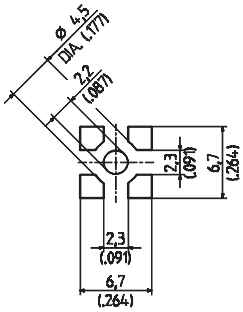

ML 123

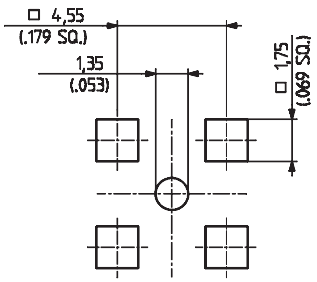

ML 126

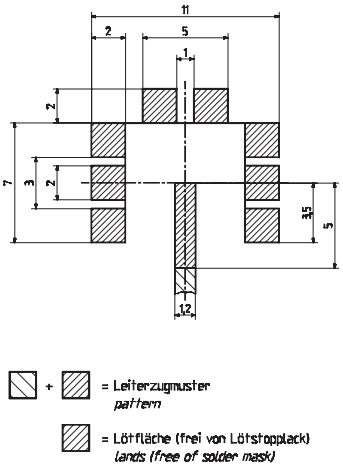

ML 130

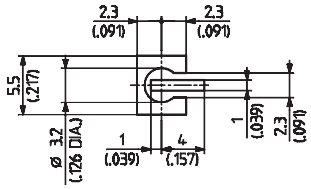

ML 131

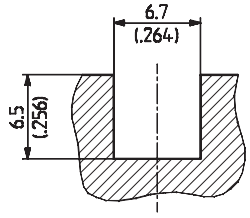

ML 132

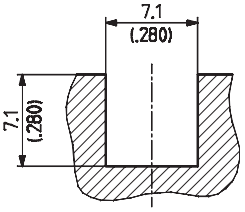

ML 134

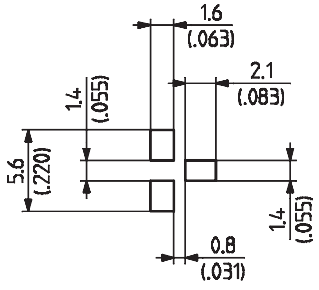

L'IMPULSION
Retrouvez nous sur
www.limpulsion.fr

Dimensions of PCB layouts (ML)

ML 135

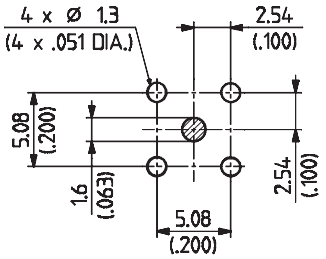

ML 136

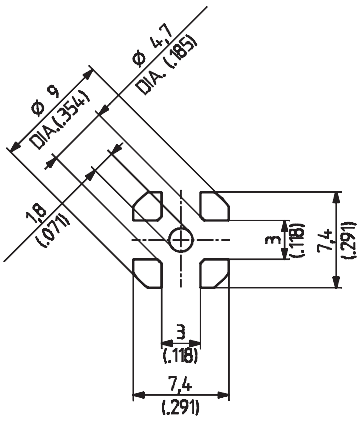

ML 137

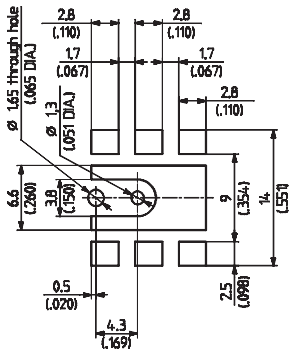

ML 138

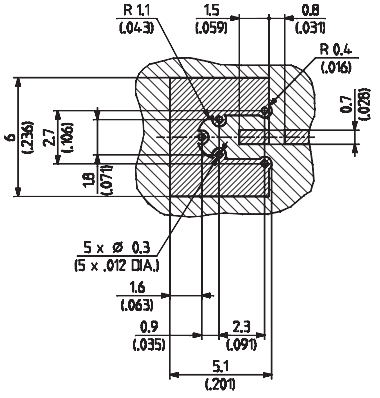

ML 147

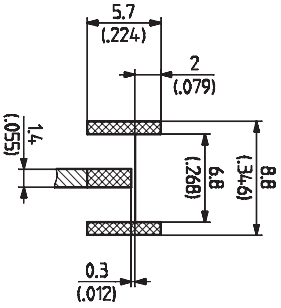

ML 155

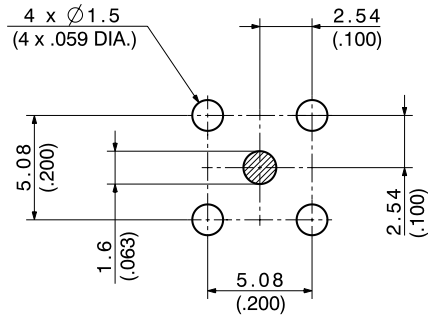

ML 167

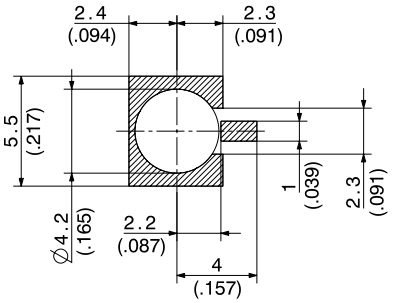

ML 169

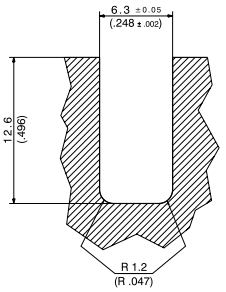

ML 173

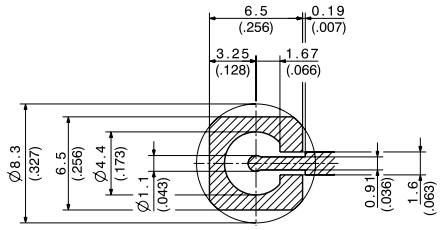

ML 174

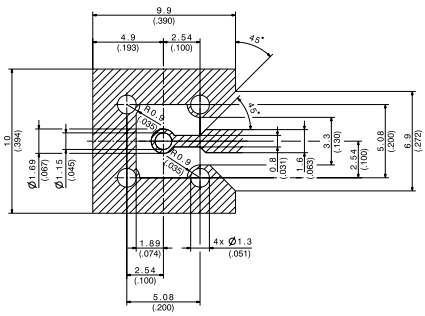

ML 182

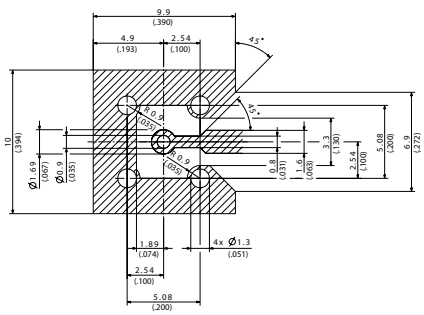

L'IMPULSION
Retrouvez nous sur
www.limpulsion.fr

L'IMPULSION
Retrouvez nous sur
www.limpulsion.fr

L'IMPULSION
Retrouvez nous sur
www.limpulsion.fr

HUBER+SUHNER AG
Radio Frequency Division
Degersheimerstrasse 14
9100 Herisau
Switzerland
Phone +41 71 353 4111
hubersuhner.com

84139295/01.2020

HUBER+SUHNER is certified according to EN 9100, ISO 9001, ISO 14001, ISO/TS 16949 and IRIS.

Waiver
Fact and figures herein are for information only and do not represent any warranty of any kind.