TEKBOX
DIGITAL SOLUTIONS



EMC Pre-Compliance



L'IMPULSION

Retrouvez nous sur
www.limpulsion.fr

BROCHURE

Tekbox Products Overview

Index

Near-field probe sets	4
Wideband pre-amplifiers	4
LISN – Line impedance stabilisation networks	5
Attenuators	6
Filters	6
Transient limiter	6
Open TEM-cells	7
Modulated power amplifiers	8
Shielded tents	9
Shielded bags	9
Roll up groundplane	9
RF current monitoring probes	10
Surface current monitoring probes	10
Coaxial current monitoring probes	10
Pulse current probes	11
RF current probe calibration fixtures	11
Bulk current injection probes	12
Antennas	13
Antenna tripods	13
Comb generators	14
CDN - Coupling Decoupling Networks	15
CDNE - Coupling Decoupling Networks Emission	16
Self powered active load	17
Injection transformers	17
Power splitter	17
50 Ohm terminations	17
Coaxial Adapter set	18
BNC Accessory set	18
Coaxial Cables	18
Cable Holders	18
SMA torque wrench	18
ESD Target	19
RF enclosures	19
VSWR Bridges	21
EMCview Software	22

www.tekbox.com

TekBox Digital Solutions Vietnam Pte. Ltd.

Factory 4, F4, Lot I-3B-1, Saigon Hi-Tech Park, Tan Phu Ward, District 9, Ho Chi Minh City, Vietnam

OUR COMPANY

Tekbox was established as a design services company in 2008. Development of automotive lighting and fleet management products was the main focus.

In parallel, Tekbox began developing its own line of environmental sensing and smart agriculture products . EMC pre-compliance testing was always regarded as an important task throughout the design process and led to the development of appropriate test methods and equipment.

EMC pre-compliance testing at Tekbox resulted in a significant decrease in time to market and product development costs. The favorable response to an open hardware LISN design, which we shared with the engineering community, prompted us to industrialize further test equipment that we had originally designed for our own use. Meanwhile, Tekbox has established itself as a prominent brand for low-cost EMC pre-compliance test equipment and continues to industrialize its product line.

While still a design services company, Tekbox recognized, that in house manufacturing capabilities are essential to speed up product design. Tekbox is highly vertically integrated in the meantime. Along with having an experienced team of hardware, firmware and software engineers, we have developed a strong manufacturing division.

SMT pick and place machines and experienced operators for manual assembly enable us to manufacture all our PCBAs in the Tekbox factory. Further capabilities are Technomelt molding, plastic injection, manual and CNC milling and turning, laser cutting and engraving and various other production processes.

OUR MISSION

With the introduction of low-cost spectrum analyzers with EMI capabilities a few years ago, in-house pre-compliance testing became feasible. Technology that was previously only available to major firms became available to design departments in medium and small businesses. All that was missing was affordable EMC testing equipment and software to supplement the analyzers and set up in-house testing. Tekbox recognized the opportunity and began developing suitable products. Along with it, we discovered the necessity to present EMC know how in the form of digestible application notes and good product documentation to facilitate pre-compliance testing for every electronic engineer.
Expect to see a continuous expansion of our product range and informative documentation.

OUR SERVICE

Our first priority is to satisfy our customers. We are not an anonymous company. Contact us or one of our sales partners whenever you require assistance.
We are very flexible because we design and manufacture under one roof. Please contact us if you have needs for customer-specific products.

EMC Near-field Probe-Set

Near-field probes are without a doubt the most effective tool for debugging EMC issues. Near-field probes are used to locate the source of RF emissions as well as circuitry susceptible to RF. Near-field probes should be at the top of the list when it comes to selecting EMC pre-compliance test equipment. The probes are usually connected to a spectrum analyzer and function similarly to wide bandwidth antennas. Scanning the probe over the surface of a PCB assembly, enclosure aperture or gaps, cables and any other component of a product quickly identifies areas that emit electromagnetic radiation. The source of the emissions can be narrowed down even more by changing to a smaller probe.

RF immunity tests can also be performed by injecting an RF signal into the probe and radiating it into possibly vulnerable circuit sections. Furthermore, via contactless monitoring of RF signal levels, the probes can be employed in the field of repair or debugging to trace out faults in RF signal chains. Non-invasive measuring of RF building blocks such as modulators or oscillators is another application. A low noise preamplifier can be used to measure frequency, phase noise, and spectral components.

The **TBPS01** set includes the magnetic field probes H20, H10, and H5, as well as an electric field probe E5 and a coaxial cable and adapter for use with spectrum analyzers with N or SMA connectors. The sets **TBPS01-TBWA/20dB** and **TBPS01-TBWA2/40dB** have 6GHz wideband preamplifiers added. The TBWA2/20dB and TBWA2/40dB wideband amplifiers are connected between probe and spectrum analyzer to increase the dynamic range of the measurements, especially at lower frequencies.

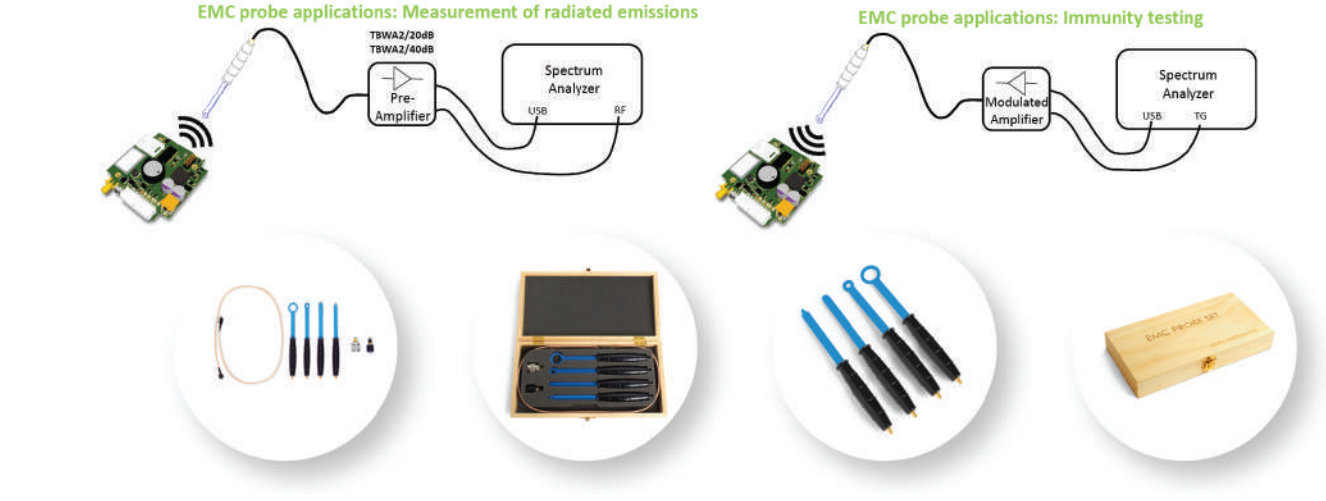

RF wideband pre-amplifiers



Model	TBWA2/20dB	TBWA2/40dB	TBHDR1
Frequency range	1.5 MHz – 6 GHz	2.5 MHz – 6 GHz	30 kHz – 1.5 GHz
Gain typ.	20 dB	40 dB	20 dB
Max. input power	+10 dBm	-10 dBm	+10 dBm
P1dB typ.	+18 dBm @ 2 GHz	+18 dBm @ 2 GHz	+18 dBm @ 100 MHz
Output IP3	+ 33 dBm @ 2 GHz	+ 33 dBm @ 2 GHz	+ 38 dBm @ 100 MHz
Noise figure	+5 dB	+ 5 dB	2.7 dB
Power supply	+5V / 110mA, mini USB-B	+5V / 210mA, mini USB-B	+5V / 100mA, mini USB-B
Application	General purpose pre-amplifier near-field probe pre-amplifier	General purpose pre-amplifier near-field probe pre-amplifier	General purpose / high dynamic range pre-amplifier

RF driver amplifiers

Model	TBDA1	TBDA2
Frequency range	40 MHz – 3 GHz	40 MHz – 3 GHz
Gain typ.	14 dB	28 dB
Max. input power	+20 dBm	+6 dBm
P1dB	+22 dBm @ 1GHz	+22 dBm @ 1GHz
Output IP3	+ 43 dBm @ 2GHz	+ 43 dBm @ 2GHz
Noise figure	+4 dB	+ 4 dB
Power supply	+5V / 115mA, mini USB-B	+5V / 225mA, mini USB-B
Application	Immunity testing in TEM cells, driven by a modulated RF signal generator	



A USB cable, a 75 cm SMA-male to N-male coaxial cable, a 25 cm SMA-male to SMA-male coaxial cable, and a SMA-female to N-male coaxial adapter are included with all RF wideband pre-amplifiers and driver amplifiers.

Line Impedance Stabilisation Networks

LISNs are key components in EMC testing. To monitor undesirable emissions on the supply line, the LISN is inserted into the device under test's supply line and utilised in conjunction with a measurement receiver or spectrum analyzer. Typically, the receiver or spectrum analyzer is operated by software such as EMCview. The software guarantees that the analyzer's settings are in accordance with CISPR 16 specifications and allows you to load and run pre-configured tests for all main EMC standards. The measurement data points are graphed along with the selected standard's limits and can be exported as test report.

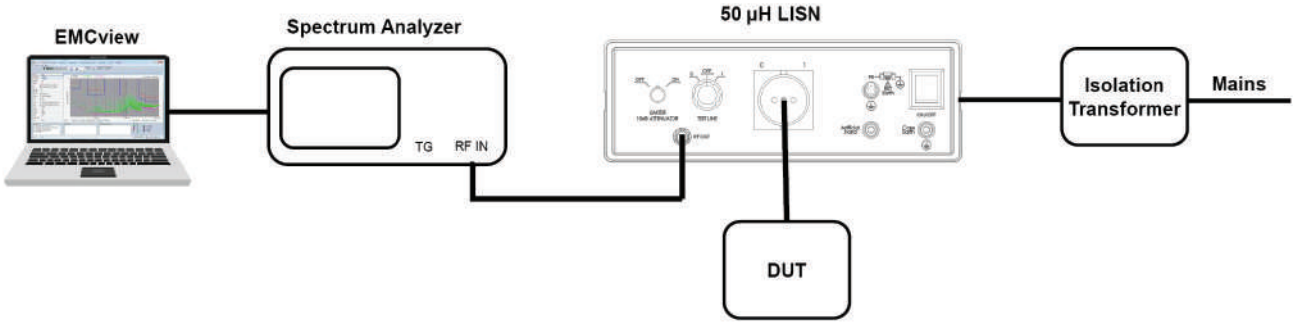

One of the most important characteristics of a LISN is that it provides a fixed source impedance for the device under test. This assures that the measurement is repeatable, regardless of the output impedance of the power source used. This attribute is also used in many other EMC test setups that use LISNs to establish a fixed supply impedance rather than measuring transmitted emissions. As a result, LISNs can be found in test setups for radiated emissions, immunity testing, and a variety of other applications.

There are two main categories of LISNs: 50µH LISNs and 5µH LISNs
50µH LISNs are typically used for testing products for domestic or industrial use in the frequency ranges of 9 kHz – 30 MHz or 150 kHz – 30 MHz
5µH LISNs are typically used for testing automotive electronics in the frequency range of 150 kHz – 110 MHz

LISNs are also classified as single-path or multi-path devices. Each path represents an entire LISN. A 2-path device, such as the majority of LISNs developed for single phase measurements, features two parallel LISNs. One is connected to the Neutral line, and the other to the Phase line. Similarly, a 3-Phase LISNs has four paths, one for each of L1, L2, L3, and Neutral.

Typically, 5µH LISNs are available as single path models. They are installed side by side, one in the positive supply line and the other in the negative supply line.

All LISNs can be used both for AC and DC. 50µH LISNs for DC applications are best purchased as single path LISNs since they have screw terminal connectors rather than normal AC mains sockets and can thus be wired more easily. Single path LISNs also provide some extra flexibility. A customer may begin by purchasing two single path LISNs for 1-phase measurements and then add two more devices for 3-phase measurements. When very high currents are involved, single path LISN also have certain advantages in terms of heat dissipation.

All LISNs consume a large amount of reactive current. To prevent the ground fault switch from triggering when employing LISNs in AC applications, they must be fed via an isolation transformer.



Model	TBL5016-1	TBL50100-1	TBLC08	TBL5016-2	TBL5016-3	TBL5032-3	TBL0110-2	TBL0225-2	TBOH01	TBL0550-1	TBL05100-1
Impedance	50µH // 50Ω	50µH // 50Ω	(50µH+5Ω) //50Ω	(50µH+5Ω) // 50Ω	(50µH+5Ω) // 50Ω	(50µH+5Ω) // 50Ω	1µH // 50Ω	2µH // 50Ω	5µH // 50Ω	5µH // 50Ω	5µH // 50Ω
Frequency range	150 kHz – 30 MHz	150 kHz – 30 MHz	9 kHz – 30 MHz	9 kHz – 30 MHz	9 kHz – 30 MHz	9 kHz – 30 MHz	10 Hz – 400MHz	10 Hz – 200MHz	150 kHz – 108 MHz	150 kHz – 108 MHz characterized from 10kHz – 200 MHz	150 kHz – 108 MHz characterized from 10kHz – 400 MHz
Path	1	1	2	2	3	3	2	2	1	1	1
Max. current	16 A	100 A	8 A	16 A	16 A	32 A	10 A	25 A	10 A	50 A	100 A
Max. Voltage	250V	250V	240V	240V	540V/260V	540V/260V	60V nominal, Component rating: 100V	60V nominal, Component rating: 100V	60V nominal, Component rating: 250V	60V nominal, Component rating: 250V	60V nominal, Component rating: 350V AC @ 50/60Hz 1000V DC
EUT Socket	Phoenix High current	Phoenix Hochstrom	Country specific mains socket	Country specific mains socket	CEE/IEC60309	CEE/IEC60309	4mm (banana)	4mm (banana)	4mm (banana)	Phoenix High current	Phoenix High current
Additional Features			Filter / Limiter / Attenuator, switchable Artificial hand connection PE switchable: 50Ω // 50µH	Filter / Limiter / Attenuator, switchable Artificial hand connection PE switchable: 50Ω // 50µH	Artificial hand connection PE switchable: 50Ω // 50µH	Artificial hand connection PE switchable: 50Ω // 50µH	100 mΩ series resistor	100 mΩ series resistor			Can be jumpered to various standards

TBLM1
LISN Mate
30 kHz – 110 MHz
Common Mode Output
Differential Mode Output

Spectrum Analyzer RF Input Protection

Spectrum analyzers have a sensitive RF input stage, with a typical maximum input power rating of +20 to +30 dBm. Exceeding these limits causes damage and costly repairs. High voltage transients, residual 50 Hz amplitude, and sub-harmonics with high amplitude may cause saturation effects and potentially damage the analyzer during conducted emission testing of inductive loads. As a result, it is best practice to protect the spectrum analyzer using input protection devices such as attenuators, limiters, and high pass filters.

Attenuator sets

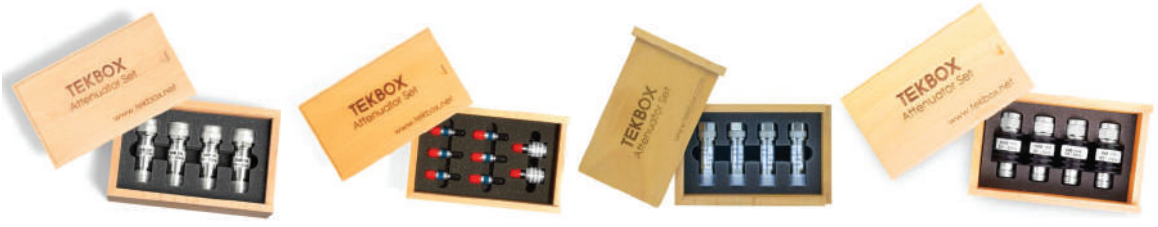

Model	TBAS1	TBAS2	TBAS4	TBAS3
RF connectors	N-male / N-female	SMA-male / SMA-female	N-male / N-female	N-male / N-female
Frequency range	DC – 3 GHz	DC – 6 GHz	DC – 6 GHz	DC – 3 GHz
VSWR	< 1.3	< 1.3	< 1.2	< 1.3
Tolerance	3, 6, 10dB: ± 0.5 dB 20 dB: ± 0.8 dB	3, 6, 10dB: ± 0.5 dB 20 dB: ± 0.8 dB	3, 6, 10, 20dB: ± 0.5 dB	3, 6, 10dB: ± 0.5 dB 20 dB: ± 0.8 dB
Power rating	2 W	1 W	2 W	10 W
Attenuation	1 x 3 dB, 1 x 6 dB, 1 x 10 dB, 1 x 20 dB	1 x 3 dB, 1 x 6 dB, 1 x 10 dB, 1 x 15 dB, 1 x 20 dB, 1 x 30 dB + 2 x 50Ω termination, male	1 x 3 dB, 1 x 6 dB, 1 x 10 dB, 1 pc 20 dB	1 x 3 dB, 1 x 6 dB, 1 x 10 dB, 1 x 20 dB

Single Attenuators



Model	TBATT-N-10-3 TBATT-N-10-6 TBATT-N-10-10 TBATT-N-10-20 TBATT-N-10-30	TBATT-N-25-3 TBATT-N-25-6 TBATT-N-25-10 TBATT-N-25-20 TBATT-N-25-30	TBATT-N-50-3 TBATT-N-50-6 TBATT-N-50-10 TBATT-N-50-20 TBATT-N-50-30	TBATT-N-100-3 TBATT-N-100-6 TBATT-N-100-10 TBATT-N-100-20 TBATT-N-100-30
RF connectors	N-male / N-female	N-male / N-female	N-male / N-female	N-male / N-female
Frequency range	DC – 3 GHz	DC – 3 GHz	DC – 3 GHz	DC – 3 GHz
VSWR	< 1.3	< 1.3	< 1.3	< 1.3
Tolerance	3, 6, 10dB: ± 0.5 dB 20 dB: ± 0.8 dB 30 dB: ± 1 dB	3, 6, 10dB: ± 0.5 dB 20 dB: ± 0.8 dB 30 dB: ± 1 dB	3, 6, 10dB: ± 0.5 dB 20 dB: ± 0.8 dB 30 dB: ± 1 dB	3, 6, 10dB: ± 0.5 dB 20 dB: ± 0.8 dB 30 dB: ± 1 dB
Power rating	10 W	25 W	50 W	100 W
Attenuation	3 dB, 6 dB, 10 dB, 20 dB, 30 dB	3 dB, 6 dB, 10 dB, 20 dB, 30 dB	3 dB, 6 dB, 10 dB, 20 dB, 30 dB	3 dB, 6 dB, 10 dB, 20 dB, 30 dB

Highpass Filters

Highpass filters protect the spectrum analyzer from residual 50 Hz amplitude and from sub-harmonics with high amplitude. The RF coupling capacitor of LISN is directly connected to the AC supply voltage of the device under test. The coupling capacitor forms a voltage divider with the 50 Ohm input impedance of the spectrum analyzer. The residual 50 Hz amplitude at the LISN RF output may be high, as the nominal 50 Ohm input impedance is often not specified at very low frequencies and can be assumed to be high. Typically, lowpass filters are employed at the analyzer input to suppress the residual 50 Hz amplitude.



Model	TBHPF1-9kHz	TBHPF1-150kHz
3 dB bandwidth	9 kHz – 3 GHz	150 kHz – 3 GHz
Attenuation	> 75 dB @ 50 Hz < 0.7 dB from 25 kHz – 1 GHz	> 75 dB @ 50 Hz < 0.4 dB from 300 kHz – 1 GHz
Maximum input voltage	100V; 250V < 5 sec	100V; 250V < 5 sec
Connectors	N-male / N-female	N-male / N-female

Combined Transient Limiter / Attenuator / Highpass Filter

Model TBFL1
Frequency range: 9 kHz – 600 MHz
Attenuation: 10 dB – 0.8/+1.6 dB in-band (9 kHz to 600 MHz)
Attenuation HP-filter: > 40 dB @ 1kHz
Maximum continuous RF input power: 5W (+37 dBm) in-band
Maximum DC input voltage: ± 20V

Input matching, linear operating range: 9 kHz – 600 MHz < – 16 dB
Output matching, linear operating range: 9 kHz – 600 MHz < – 23 dB
Linear operating range: up to 0 dBm input level, in-band
Limiting threshold: +11 dBm (@ 37dBm input level)
Input connector: N-female
Output connector: N-male

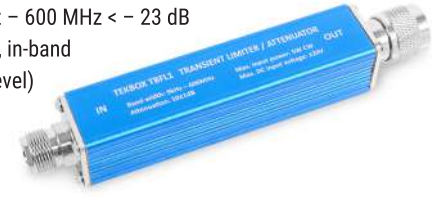

Open TEM-cells

A TEM or transverse electromagnetic cell is a type of test chamber used to perform EMC or EMI testing. It allows for the creation of electromagnetic fields in a small enclosed setting, or the detection of electromagnetic fields radiated within the chamber. TEM cells are ideal for RF pre-compliance testing, as they are low cost, have a larger bandwidth as most of the measurement antennas and require less RF power to create strong electromagnetic fields compared to a setup with an antenna.
Within the two outer metal sheets lies the septum, forming a 50 Ohm transmission line that can be connected to standard coaxial cables. The interior of the cell acts similar as a waveguide and converts electric signals into homogeneous electromagnetic fields with approximately transverse mode distribution, similar to free space. The electric and magnetic field inside the cell depends on the applied RF power and septum height and can be accurately calculated. The cell acts to either receive internal emissions or transmit emissions within the chamber.
When measuring radiated emission tests, one end of the TEM-cell is connected to a spectrum analyzer. A 50 Ohm RF termination is connected to the other end.
When performing radiated immunity tests, one end of the TEM-cell is connected to a RF source. A 50 Ohm RF termination is connected to the other end.
Tekbox TEM-cells do not have metal side walls. This has the advantage of being low-cost to manufacture, and the item under examination may be inserted and accessed relatively easily. It also has the advantage of making it easier to see the behaviour of the device under test during immunity tests as compared to a closed TEM-cell.

The downside of an open TEM cell is that it picks up ambient noise, although because it still has some shielding, it is substantially less than ambient noise picked up by a measuring antenna. The TEM cell can be set up inside a shielded tent or shielded bag to further reduce ambient noise. When compared to closed TEM-cells, the combined cost of a Tekbox open TEM cell with a suitable shielded tent is still significantly lower. Other test setups can also benefit from the shielded tent.
It is a common misconception that radiated emission measurements obtained in a TEM cell can be easily converted into corresponding antenna measurements. Radiated emission measurements in a TEM cell are near-field measurements, whereas antenna measurements are far-field measurements. EMCview provides a TEM-cell to far-field correlation in accordance with IEC 61000-4-20, although it is only suitable for DUTs small enough to fit inside the TEM-cell in all three orthogonal orientations.
In terms of radiated emission measurements, TEM-cells are an excellent tool for relative measurements, monitoring design modifications, and creating an overview of the device under test's radiated spectrum. The spectrum obtained in a TEM cell serves as a base for subsequent measurements with the antenna in free space. It enables the identification of the spurious emissions of the DUT within the ambient noise spectrum picked up by an antenna.

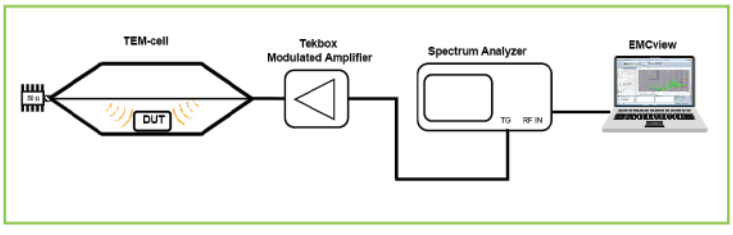

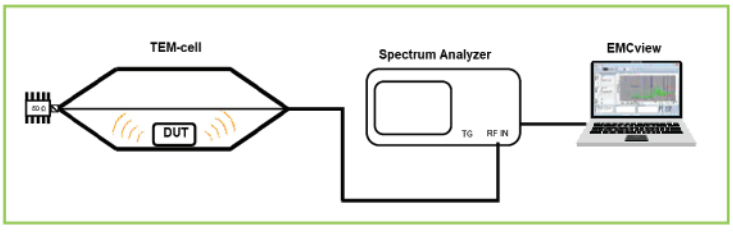

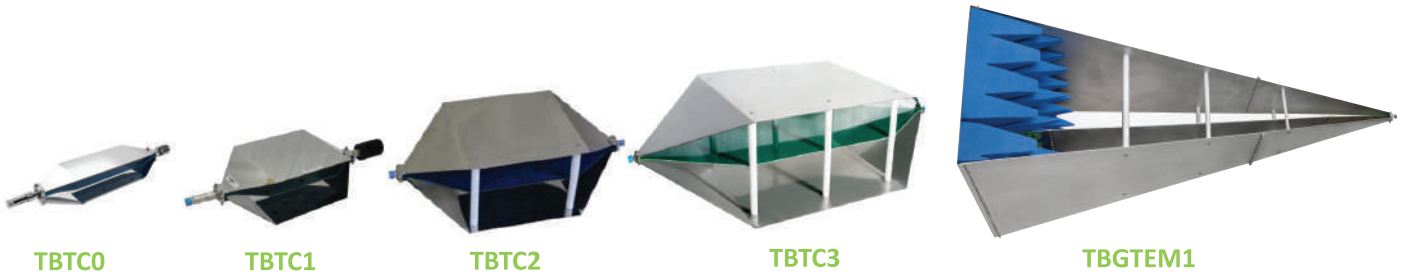

TBTC0 TBTC1 TBTC2 TBTC3 TBGTEM1

Model	TBTC0	TBTC1	TBTC2	TBTC3	TBGTC1 GTEM
Frequency range for immunity tests	9 kHz – 3.15 GHz	9 kHz – 2.1 GHz	9 kHz – 1.2 GHz	9 kHz – 700 MHz	9 kHz – 6 GHz
Frequency range for radiated emission tests	9 kHz – 6 GHz	9 kHz – 6 GHz	9 kHz – 6 GHz	9 kHz – 6 GHz	9 kHz – 6 GHz
Max. input power	100 W * Requires 100W termination	500 W * Requires 500W termination	500 W * Requires 500W termination	500 W * Requires 500W termination	600 W
Outer dimensions (LxWxH)	390 x 100 x 62 mm	390 x 200 x 108 mm	636 x 300 x 205 mm	1038 x 501 x 305 mm	1452 x 780 x 520 mm
Usable area under septum	190 x 70 mm	190 x 130 mm	230 x 280 mm	360 x 480 mm	250 x 250 mm at the location of the EUT panel
Septum height	28 mm	50 mm	100 mm	150 mm	230 mm at the location of the EUT panel
Application	Radiated emission and immunity pre-compliance testing	Radiated emission and immunity pre-compliance testing	Radiated emission and immunity pre-compliance testing	Radiated emission and immunity pre-compliance testing	Radiated emission and immunity pre-compliance testing
Default accessories	DC-block, 10W termination, N-male to N-male 75 cm RG223 cable	DC-block, 25W termination, N-male to N-male 75 cm RG223 cable	DC-block, 25W termination, N-male to N-male 75 cm RG223 cable	DC-block, 25W termination, N-male to N-male 75 cm RG223 cable	N-male to N-male 75 cm RG223 cable Wooden EUT panel

Modulated RF Power Amplifiers

Wideband RF power amplifiers and RF signal generators are critical components in both radiated and conducted immunity tests. The combined cost of the requisite immunity test equipment is prohibitively expensive for pre-compliance applications.
Tekbox created a low-cost solution comprised of modulated RF power amplifiers driven by spectrum analyzer tracking generators. Our amplifiers include built-in modulators that produce the typical modulation forms defined by the applicable standards, as tracking generators provide a CW output signal: 1 kHz, 80% AM, 1 kHz, 50% duty cycle PM, 217 Hz, 12.5% duty cycle PM.
Our EMCview software controls the frequency and output power of the tracking generator during testing.

Depending on model, our amplifiers currently cover the frequency range from 100 kHz to 1.5 GHz and the available output power covers the range from 150 mW to 25 W.
The modulated amplifiers are suitable for radiated immunity testing in TEM cells and conducted immunity testing with CDNs or bulk current injection probes.

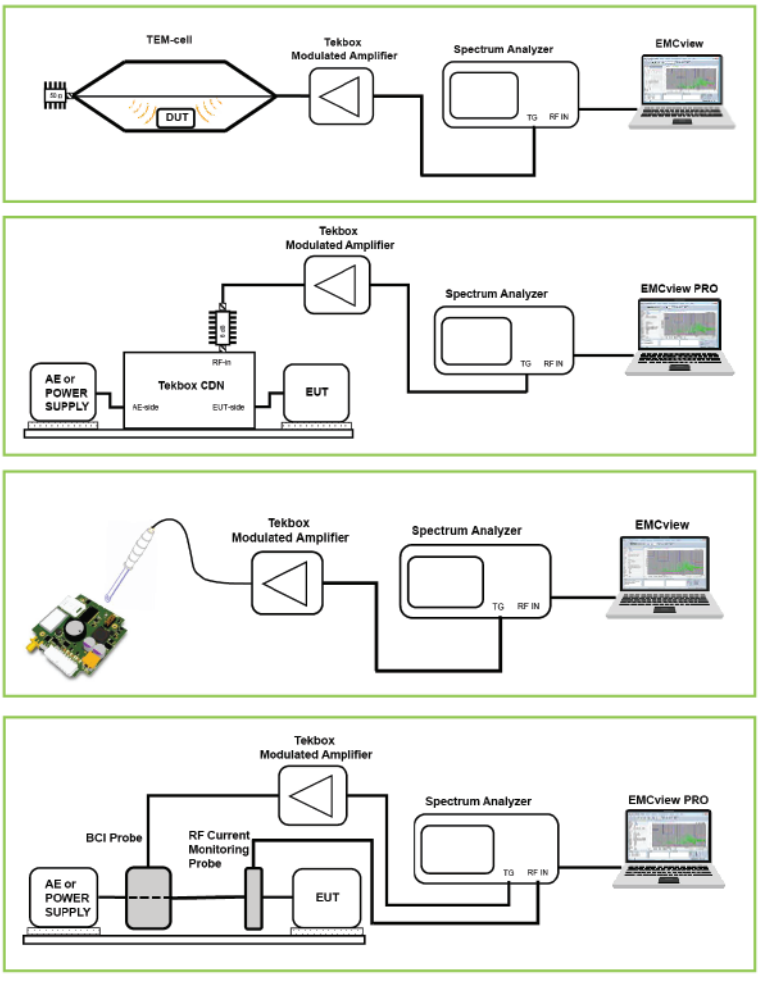



Model	TBMDA1	TBMDA2	TBMDA3B	TBMDA4B	TBMDA5	TBLPA1	TBMDA-CDN25	TBMDA-BCI25
Frequency range	40 MHz - 3 GHz	10 MHz - 1.5 GHz	10 MHz - 1 GHz	100 kHz - 75 MHz	150 kHz - 1 GHz	10 MHz - 1 GHz	150 kHz - 250 MHz	1 MHz - 400 MHz
Output power	150 mW	0.5 W	8 W	5 W	2.5 W	1 W	25 W	25 W
Modulator	AM, 1kHz, 80% PM, 1kHz, 50% PM, 217Hz, 12.5%	AM, 1kHz, 80% PM, 1kHz, 50% PM, 217Hz, 12.5%	AM, 1kHz, 80% PM, 1kHz, 50% PM, 217Hz, 12.5%	AM, 1kHz, 80% PM, 1kHz, 50% PM, 217Hz, 12.5%	AM, 1kHz, 80% PM, 1kHz, 50% PM, 217Hz, 12.5%	-	AM, 1kHz, 80% PM, 1kHz, 50% PM, 217Hz, 12.5%	AM, 1kHz, 80% PM, 1kHz, 50% PM, 217Hz, 12.5%
Gain	22 dB	43 dB	42 dB	48 dB	38 dB	37 dB	47 dB	47 dB
Application	Immunity pre-compliance testing in TEM-cells	Immunity pre-compliance testing in TEM-cells	Immunity pre-compliance testing in TEM-cells	Immunity pre-compliance testing in TEM-cells	Immunity pre-compliance testing in TEM-cells or with CDNs according EN 61000-4-6	General Purpose	Immunity pre-compliance testing with CDNs or BCI probes according EN 61000-4-6	Immunity pre-compliance testing with BCI-probes according EN 61000-4-6
Maximum stress levels	TBTC0: 100 V/m TBTC1: 56 V/m TBTC2: 28 V/m TBTC3: 18 V/m	TBTC0: 178 V/m TBTC1: 100 V/m TBTC2: 50 V/m TBTC3: 33 V/m	TBTC0: 711 V/m TBTC1: 398 V/m TBTC2: 199 V/m TBTC3: 132V/m	TBTC0: 565 V/m TBTC1: 316 V/m TBTC2: 158 V/m TBTC3: 105 V/m	Level 1 Level 2 (lim.freq.)	-	Level 1 Level 2 Level 3	Substitution method: Level I (AM, CW) Level II (AM, CW) Level III (CW) Level IV (CW)
Supply	USB	USB	Mains 100 - 240V AC	Mains 100 - 240V AC	Mains 100 - 240V AC	Mains 100 - 240V AC	Mains 100 - 240V AC	Mains 100 - 240V AC

Shielded Tents

Tents made of conductive fabrics are effecticve at shielding measurement setups from ambient noise. The shielded tents can be used to accommodate TEM-cells or small wideband antennas. Such a setup is used to obtain a spectral plot, that solely includes radiated emissions of the device under test. The spectral plot is used for a subsequent open area antenna test to identify DUT emissions in the dynamic ambient noise spectrum maze. This procedure with standard compliant antenna spacing simplifies obtaining a reliable radiated emission test result in EMC pre-compliance tests, where in most cases no absorber chamber is available.







Model	TBST-86/49/45/2-B	TBST-86/49/45/1-B	TBST-120/60/60/2-B	TBST-200/100/100
Outer dimensions	86 x 48 x 48 cm	86 x 48 x 48 cm	124 x 64 x 60 cm	204 x 104 x 100 cm
Opening dimensions	40 x 22 cm	40 x 22 cm	85 x 35 cm	130 cm x 46 cm
Frame	2020 extruded aluminium profiles	2020 extruded aluminium profiles	2020 extruded aluminium profiles	2020 extruded aluminium profiles
Shielding	2 layers of conductive fabrics	2 layers of conductive fabrics	2 layers of conductive fabrics	2 layers of conductive fabrics
Seal	Conductive Velcro tape	Conductive Velcro tape	Conductive Velcro tape	Conductive Velcro tape
Suspension	Velcro straps	Velcro straps	Velcro straps	Velcro straps
Filter Panel	1 x 240V/10A AC mains filter; IEC socket; 2 x 240V/10A DC filter; cables with female Banana couplers 3 pcs N- female + 1 pc BNC-female feed through connectors with screw caps	2 x 240V/10A DC filter; cables with female Banana couplers 3 pcs N- female + 1 pc BNC-female feed through connectors with screw caps	1 x 240V/10A AC mains filter; IEC socket; 2 x 240V/10A DC filter; cables with female Banana couplers 3 pcs N- female + 1 pc BNC-female feed through connectors with screw caps	1 x 240V/10A AC mains filter; IEC socket; 2 x 240V/10A DC filter; cables with female Banana couplers 3 pcs N- female + 1 pc BNC-female feed through connectors with screw caps
Internal AC-socket	Pigtail with detachable mains socket , type F (Schuko)	Pigtail with detachable mains socket , type F (Schuko)	Pigtail with detachable mains socket , type F (Schuko)	Pigtail with detachable mains socket , type F (Schuko)
Attenuation	Up to 50 dB in the range 10 MHz – 6 GHz	Up to 50 dB in the range 10 MHz – 6 GHz	Up to 50 dB in the range 10 MHz – 6 GHz	Up to 50 dB in the range 10 MHz – 6 GHz
Suitable TEM-cells	TBTC0, TBTC1, TBTC2	TBTC0, TBTC1, TBTC2	TBTC0, TBTC1, TBTC2, TBTC3	TBTC0, TBTC1, TBTC2, TBTC3

Shielded Bags

The TBSB line of shielded bags is designed to suppress interference from ambient noise when carrying out EMC pre-compliance measurements. The shielded bags are a low cost alternative to shielded tents for test equipment such as LISNs or TEM-cells.
The shielded bags are made of two layers of conductive fabrics. The access opening is sealed with conductive Velcro tape. Suggestions on how to feed cables into the bags are given in the corresponding manual.









Model	TBSB-70/40	TBSB-105/60
Outer dimensions	70 x 40 cm	105 x 60 cm
Shielding	2 layers of conductive fabrics	2 layers of conductive fabrics
Seal	Conductive Velcro tape	Conductive Velcro tape
Filter Panel	none	none
Attenuation	Up to 50 dB in the range 10 MHz – 6 GHz	Up to 50 dB in the range 10MHz – 6 GHz
Suitable TEM-cells	TBTC0, TBTC1,	TBTC0, TBTC1, TBTC2

Roll Up Ground Plane

Many EMC pre-compliance test set ups require a ground plane. Not every lab has the necessary space for permanent installation of a sheet metal ground plane. This is where the Tekbox TBGP-250/140 “roll up” ground plane comes handy. The ground plane can be rolled up after use and stored inside its cardboard tube in a corner of the lab. The ground plane is composed from a conductive fabric bonded to a fleece.





Fabric dimensions: 250 cm x 140 cm
Fabric thickness: 0.7 mm
Fabric weight: 1.1 kg
Fabric material: Polyester 45% + Silver 55% conductive fabric, fleece
Contact block dimensions: 96 mm x 40 mm x 7.2 mm
Contact block weight: 0.23 kg
Contact block material: nickel plated

RF Current Monitoring Probes

The voltage produced by RF current monitoring probes into a 50-ohm load is proportional to the current flowing through the wires going through the probe aperture. RF current monitoring probes, like LISNs, are used to measure conducted emissions. RF current probes measure the current of conducted emissions, whereas LISNs measure the voltage. Current monitoring probes are not intrusive. It is not necessary to separate the wire harness under test. In addition, RF current monitoring probes typically cover a wider frequency range than LISNs. The EMC standards indicate where LISNs must be used and where current monitoring probes must be used. The primary use is conducted emission measurement on data or control cables. Furthermore, RF current monitoring probes are very versatile tools for the investigation and improvement of EMC issues and for many other applications.
Tekbox RF current monitoring probes cover the frequency range up to 1 GHz. The series with fixed aperture are especially inexpensive. In circumstances, where the cable harness cannot simply be disconnected to feed it through the aperture, Tekbox offers the TBCP2 series snap on probes.

To calculate the corresponding current flowing through the wires passing the probe aperture, subtract the individually documented trans-impedance value in [dB] from the probe's output voltage.









Model	TBCP1-200	TBCP1-250	TBCP1-500	TBCP2-250	TBCP2-30K400	TBCP2-500	TBCP2-750	TBCP3-1000	TBCP4-250	TBCP4-500	TBCP4-750
Characterized frequency range	10 kHz – 200 MHz	30 kHz – 250 MHz	30 kHz – 500 MHz	10 kHz – 250 MHz	10 Hz – 400 MHz	10 kHz – 500 MHz	10 kHz – 750 MHz	30 kHz – 1 GHz	10 kHz – 250 MHz	10 kHz – 500 MHz	10 kHz – 750 MHz
Trans-impedance	17 dBΩ	18 dBΩ	20 dBΩ	16 dBΩ	2 dBΩ	20 dBΩ	22 dBΩ	20 dBΩ	14 dBΩ	16 dBΩ	20 dBΩ
Aperture diameter	25 mm	25 mm	25 mm	32 mm	32 mm	32 mm	32 mm	17 mm	32 mm	32 mm	32 mm
Snap on / hinge	no	no	no	yes	yes	yes	yes	no	no	no	no

RF Surface Current Monitoring Probes

RF Surface current monitoring probes are utilised in applications where RF currents flowing on surfaces such as PCB groundplanes or traces, metal planes or wires must be measured.



Model	TBSCP1-5M300	TBSCP1-10M500
Characterized frequency range	30 kHz – 400MHz	30 kHz – 600MHz
Trans-impedance	-7 dBΩ	-5 dBΩ
Footprint	40 x 15 mm	40 x 15 mm

Coaxial RF Current Monitoring Probes

Coaxial RF current monitoring probes are used to measure RF currents in coaxial cables. They can be used as general purpose coupling devices to measure RF power or as loop antenna transducers.



Model	TBCCP1-2K70	TBCCP1-3K100	TBCCP1-400K600
Characterized frequency range	10 Hz - 100 MHz	10 Hz - 100 MHz	10 Hz - 600 MHz
Trans-impedance	0 dBΩ	+5 dBΩ	+23 dBΩ
Application	Transducer for large loop antennas (LLA)	General purpose coupling device	General purpose coupling device

RF Pulse Current Monitoring Probes



RF pulse Current Monitoring Probes are typically used for surge or RF pulse current monitoring applications in the time domain.

Model	TBPCP1-20100	TBPCP2-3070
Characterized frequency range	1 Hz – 200 MHz	1 Hz – 200 MHz
3 dB frequency range	20 Hz – 100 MHz	30 Hz – 70 MHz
Transfer Impedance (high Z)	0.2 V/A	0.1 V/A
Transfer Impedance (50 Ohm)	0.1 V/A	0.05 V/A
Droop rate	< 10% / ms	< 20% / ms
Rise time	< 5 ns	< 5 ns
Aperture diameter	25 mm	40 x 15 mm

Current Probe calibration fixtures

Current Probe Calibration Fixtures are used for calibrating / measuring the transimpedance of current probes. Calibrators are also required for the calibration of immunity test setups with BCI probes.

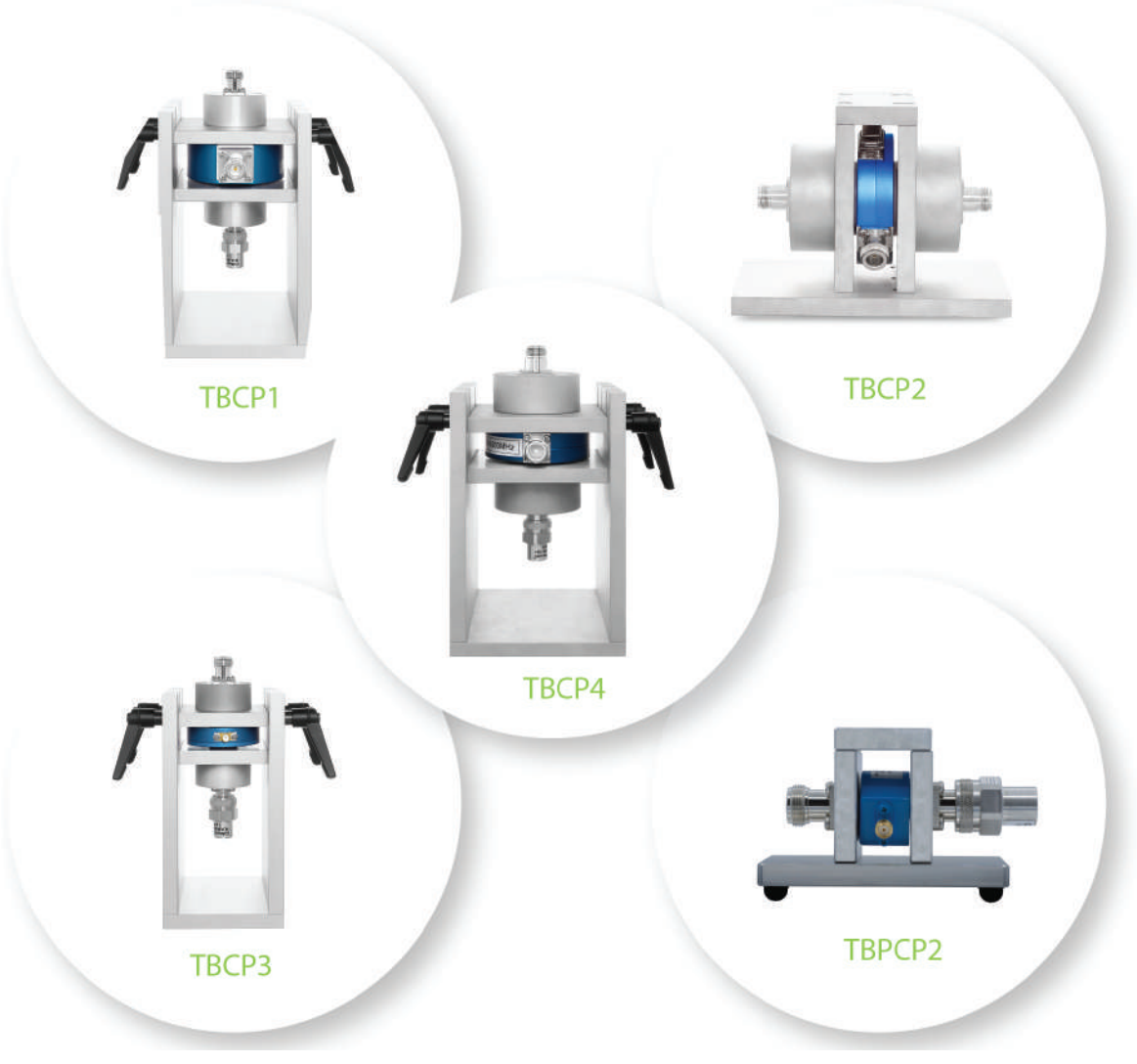

Model	TBCP1-CAL	TBCP2-CAL	TBCP3-CAL	TBCP4-CAL	TBPCP2-CAL
Application	TBCP1 series, TBPCP1-20100	TBCP2 series	TBCP3 series	TBCP4 series	TBPCP2-3070

BCI-Probes

Bulk Current Injection Probes are used to inject RF-current into cables of electrical equipment to test the susceptibility against radiated electromagnetic energy. Tekbox BCI-probes can be clamped around wire bundles with up to 27 mm. They are designed to meet the specifcations of the standards IEC 61000-4-6 (domestic and industrial products) and ISO 11452-4 (automotive products).

Tekbox supplies suitable wideband power amplifiers to drive the BCI probes:
TBMDA-CDN25 for immunity tests according to IEC 61000-4-6
TBMDA-BCI25 for immunity tests according to ISO 11452-4

The calibration fixture TBBCI1-CAL is suitable for both BCI-probe models

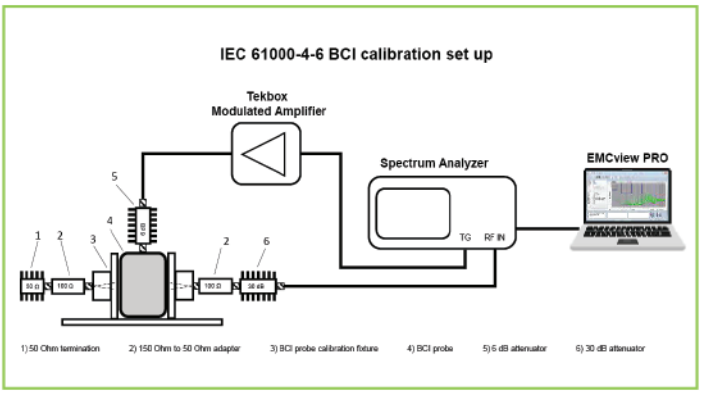

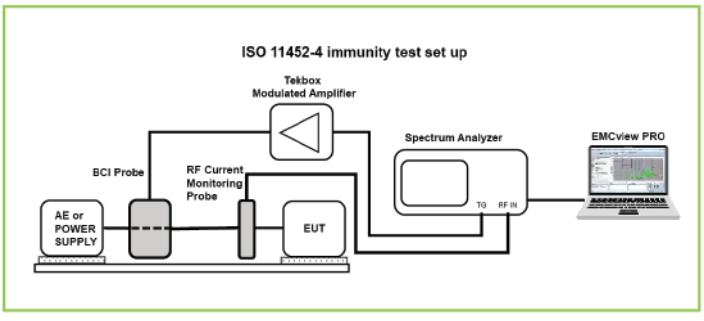

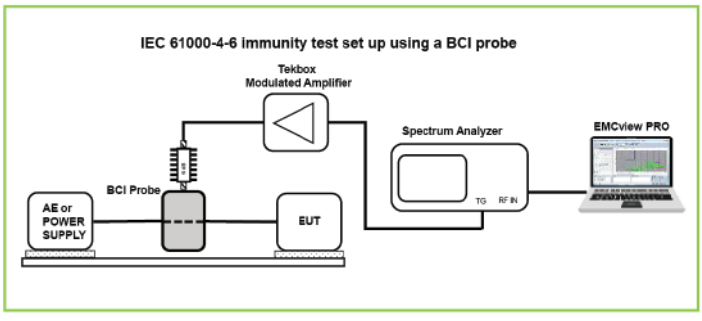

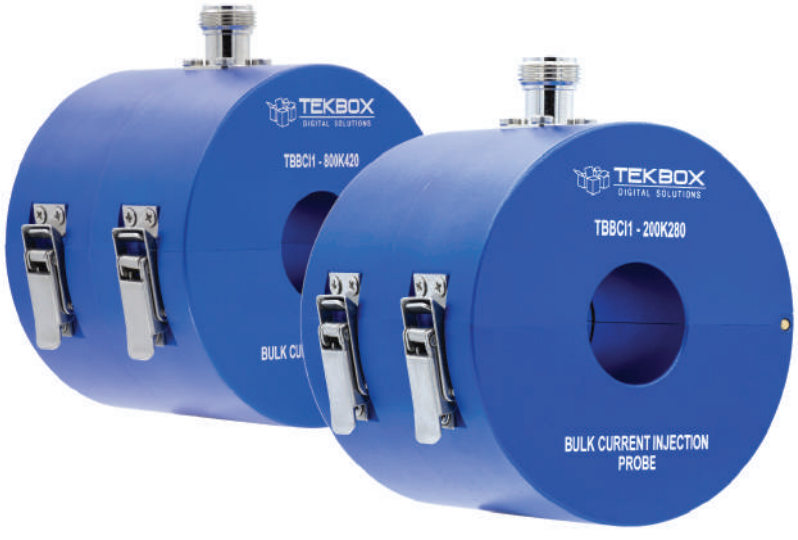

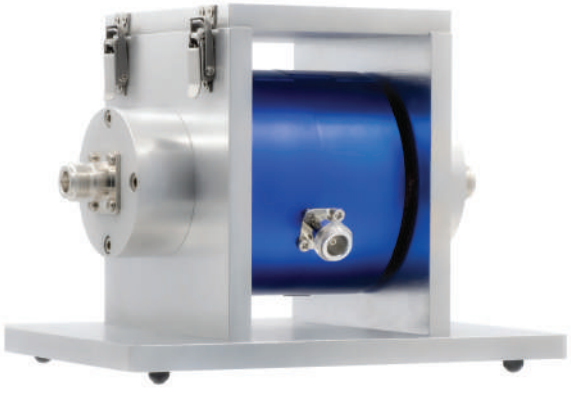

Model	TBBCI1-200K280	TBBCI1-800K420	TBBCI1-CAL
Frequency range	150 kHz – 230 MHz	1 MHz -400 MHz	150 kHz – 400 MHz
Coupling loss	8 dB typical	5dB typical	-
Maximum RF input power	50 W	50 W	500 W
Aperture diameter	27 mm	27 mm	-
Outer dimensions	92 x 76 mm	92 x 76 mm	200 x 150 x 140 mm
Application / Standard	BCI probe for IEC / ISO 61000-6-4	BCI probe IEC / ISO 11452-4	BCI probe calibrator for IEC / ISO 61000-6-4 IEC / ISO 11452-4

Measurement antennas

Measurement antennas are used for standard compliant radiated emission measurements in the far-field. The antenna portfolio includes CISPR bands B, C, D, and E. Every antenna is characterized by an antenna factor. The electrical field strength in dBµV/m is obtained by adding the antenna factor in [dB/m] to the measured antenna output voltage in [dBµV].
All antennas have a 1/4" thread for tripod mounting. The TBMA1 and TBMA4 antennas are bundled with a tripod TBTP2. The TBMA1 and TBMA3 antennas are packaged in a carrying case.


TBMA6-P


TBMA5


TBMA1


TBMA2


TBMA3

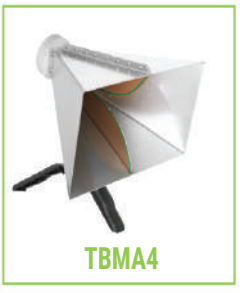
TBMA4

Modell	TBMA6-P	TBMA5	TBMA1	TBMA2	TBMA3	TBMA4
Type	Loop	Active Monopole	Biconical	Biconical	Logarithmic - periodic	Horn
Frequency range	9 kHz – 30 MHz	9 kHz – 30 MHz	30 MHz– 1GHz	30 MHz – 300 MHz	250 MHz – 1.3 GHz	1 GHz – 8 GHz
CISPR band	B	B	C + D	C	D	E
Antenna-factor	-20 dB/m @ 30 MHz	0 dB/m	16 – 41 dB/m	11 – 26 dB/m	14 – 27 dB/m	24 – 43 dB/m
Maximum input power	-	-	2 W	100 W	100 W	100 W

Antenna tripods

TBTP1, carbon fibre tripod



Carbon Fiber sections
Number of sections: 4
Maximum Height: 1490mm
Storage Height: 370mm
Load-bearing: 6kg
Bubble Level
Net Weight: 1.37kg

TBTP2, pistol grip tripod



Tiny plastic tripod for light antennas

TBTP3, wooden tripod



Beech wood
Number of sections: 3
Height range: 800 mm – 1800 mm
Storage Height: 850 mm
Load-bearing: 8 kg
Bubble level
Net Weight: 3.4 kg

Comb Generators

Comb generators produce a wide spectrum of equally spaced spectral lines. The comb frequency is equal to the frequency gap between neighbouring spectral lines. Comb generators are purpose-built “interferers” used to test setups for conducted or radiated emissions. Comb generators for testing radiated emission setups have been characterised in an absorber chamber and can thus be used as a reference source for non-ideal test setups.



TBCG1



TBCG2



TBCG3-CN



TBCG3-RN2







TBCG3-RN6

Model	TBCG1	TBCG2	TBCG3-CN	TBCG3-RN2	TBCG2-RN6
Characterized frequency range	100 MHz – 6 GHz	2 MHz – 6 GHz	5 kHz – 2 GHz	5 kHz – 2 GHz	5 kHz – 6 GHz
Comb frequencies	internal, 100 MHz	external, 2 MHz– 300 MHz	switchable 0.1, 0.5, 1, 5, 10 MHz, external 5 kHz– 300 MHz	switchable 5, 10, 25, 50, 100 MHz external 5 kHz– 300 MHz	switchable 5, 10, 25, 50, 100 MHz external 5 kHz– 300 MHz
External Input	no	Only external	yes	yes	yes
Power supply	9V Battery	passive	4 x NiMH, AA	6 x NiMH, AA	6 x NiMH, AA
accessory	-	-	External universal charger	2 monopole antennas, external universal charger	2 monopole antennas, external universal charger
Application	Reference for radiated emissions	General purpose, frequency multiplier	Reference for conducted emissions	Reference for radiated emissions	Reference for radiated emissions

Coupling De-Coupling Networks

Coupling De-Coupling Networks (CDN) are utilised for conducted immunity testing in accordance with IEC 61000-4-6.
The **TBCDN-Mx** series complies with Annex D2 of IEC 61000-4-6. It is designed to inject common mode disturbance signals into unscreened AC and DC power supply lines in the frequency range of 150 kHz to 230 MHz.
IEC 61000-4-6 immunity tests simulate electrical equipment vulnerability to transmitter signals radiated into the wire harness. The highest voltage is injected by transmitter signals whose frequency coincides with the cable's resonance frequency. In resonance, cables connected to electrical equipment act as receiving antennas with a common mode impedance of 150 Ohm. Therefore, by using coupling and decoupling networks with 150 common mode impedance, the test setup imitates resonating cables.
CDN M-type are used for injecting disturbance voltage into AC or DC supply lines, unscreened lines, unbalanced lines.

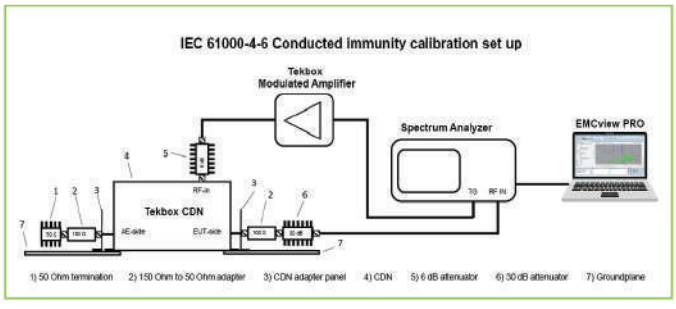

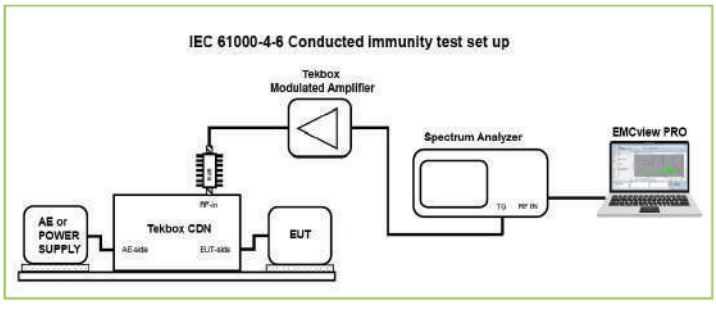



Model	TBCDN-M1	TBCDN-M2	TBCDN-M3	TBCDN-M4	TBCDN-M5
Application	Unscreened AC and DC power supply lines	EUT supplied with DC or single phase AC, Line + Neutral	EUT supplied with single phase AC, Line + Neutral + Earth	EUT supplied with 3-phase AC and wired in Delt- configuration	EUT supplied with 3-phase AC and wired in Y-configuration

Maximum supply voltage: 300V AC, 600V DC
Maximum current: M1: 15 A; M2/2/4/5: 36A
Frequency range: 150 kHz – 230 MHz
Maximum RF input power: 6.5W CW
Maximum RF input voltage: 32 V
Common mode impedance:
+ 150 kHz – 24 MHz: 150 Ω ± 20 Ω
+ 24 MHz – 80 MHz: 150 Ω + 60 Ω / – 45 Ω
+ 80 MHz – 230 MHz: 150 Ω ± 60 Ω

Voltage Division Ratio:
+ 150 kHz – 80 MHz: 9.5 dB ± 1 dB
+ 80 MHz – 230 MHz: 9.5 dB + 3 dB / – 2 dB
RF input connector: N – female
EUT / AE connectors: 4 mm banana safety jacks, 4mm slots in base plate for GND connection
Housing material: powder coated aluminium, stainless steel base plate
Dimensions: 300 x 150 x 150 mm
Weight: ca. 2.5 kg
Included: individual test protocol with voltage division ratio and common mode impedanc

CDN Accessories

Tekbox provides all of the peripherals needed for a standard compliance calibration and testing setup.



TBCDN-50-150



TBCDN-Mx-AP

Part Number	Description
TBCDN-M1-AP	Adapter panel with shorting bar for M1 coupling decoupling network; N-Female to 4mm Banana plug
TBCDN-M2-AP	Adapter panel with shorting bar for M2 coupling decoupling network; N-Female to 2x 4mm Banana plug
TBCDN-M3-AP	Adapter panel with shorting bar for M3 coupling decoupling network; N-Female to 3x 4mm Banana plug
TBCDN-M4-AP	Adapter panel with shorting bar for M4 coupling decoupling network; N-Female to 4x 4mm Banana plug
TBCDN-M5-AP	Adapter panel with shorting bar for M5 coupling decoupling network; N-Female to 5x 4mm Banana plug
TBCDN-50-150	50 Ω to 150 Ω N-male to N-female adapter

The **TBCDN-AS-M1** (M2/M3/M4/M5) Accessory Set includes everything needed for a CDN calibration and test setup. There are five variants that differ in terms of the adapter panels required for various CDN models



TBCDN-AS-M1

Quantity	Part	Description
2	Ground plane	Aluminium groundplane
2	TBCDN-50-150	50 Ω to 150 Ω N-male to N-female adapter
2	TBCDN-Mx-AP	Adapter panel with shorting bar for Mx coupling decoupling network; N-Female to 4 mm Banana plug
1	TBATT-N-10-6	6dB attenuator, 10W, 3 GHz, N-connector
1	TBATT-N-10-3	3dB attenuator, 10W, 3 GHz, N-connector
1	TBTER-N-10-6	50Ohm Termination, 10W, 6GHz, N-connector

Coupling De-Coupling Networks Emission

CDNEs are a type of Coupling Decoupling Networks used for an alternative technique of measuring radiated emission of lighting equipment in accordance with the CISPR 15 (EN55015) standard.
It avoids the need for emission measurements on Open Area Test Sites. This method was established in CISPR 15 edition 9 as an acceptable alternative to a traditional OATS test configuration that required antennas and calibrated test sites. It is specified for the frequency range from 30 MHz to 300 MHz. The CDNE method and the associated limits up to 300 MHz can be only applied for EUTs with clock frequencies below or equal to 30 MHz. In such a case, the product is deemed to comply with the requirements between 300 MHz and 1000 MHz.
CISPR 15 edition 9 also specifies that the mains supply cable of the EUT should be terminated with a CDNE positioned on the reference-ground plane for the OATS, SAC or FAR measurement method.
Unlike CDNs, CDNEs are not appropriate for immunity measurements
The Tekbox TBCDNE-M2 is designed for EUTs that do not have a PE (Earth) connection. Tekbox offers the TBCDN-M3 model for measuring EUTs with PE, Neutral, and Line connections.

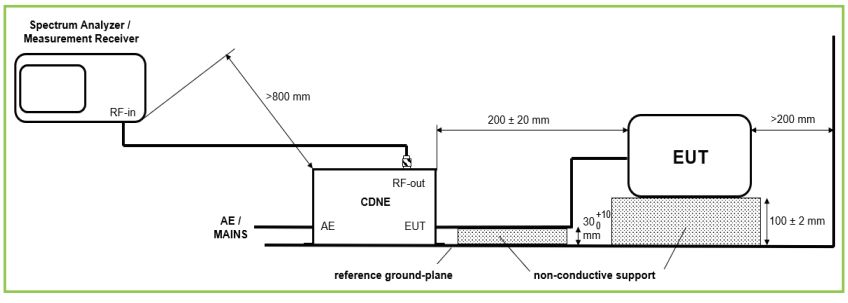





Model	TBCDNE-M2	TBCDNE-M3
Application	CISPR 15 Radiated emissions Unscreened AC and DC power supply lines	CISPR 15 Radiated emissions EUT supplied with DC or single phase AC, Line + Neutral

TBCDNE-M2

Compliance: CISPR 15 (IEC / EN 55015) Edition 9, CISPR 16-1-2 / 16-2-1
Maximum supply ratings: 300V AC, 600V DC, 16A
Frequency range: 30 MHz – 300 MHz
Common mode impedance: 150 Ω +10 / - 20 Ω (EUT port)
Phase response: 0° ± 25° (EUT port)
Differential mode impedance: 100 Ω ± 20 Ω (EUT port)
Voltage Division Factor: 20 dB ± 1.5 dB (EUT to RF output)

TBCDNE-M3

AE to EUT decoupling: > 30 dB
AE to RF output decoupling: > 30 dB
RF output connector: N – female
EUT / AE connectors: 4 mm banana safety jacks, 4 mm slots in base plate for GND connection
Housing material: powder coated aluminium, stainless steel base plate
Dimensions: 300 x 150 x 150 mm
Weight: ca. 2.5 kg
Included: NIST traceable calibration data

CDNE Accessories

Tekbox provides all of the peripherals needed for a standard compliance calibration and testing setup.



Part Number	Description
TBCDNE-M2-AP	Adapter panel with shorting bar for M2 CDNE; N - Female to 4mm Banana plug
TBCDNE-M3-AP	Adapter panel with shorting bar for M3 CDNE; N - Female to 4mm Banana plug
TBCDNE-M2-CAL1	50 Ω to 150 Ω adapter panel for VDF measurement / calibration of TBCDNE - M2
TBCDNE-M3-CAL1	50 Ω to 150 Ω adapter panel for VDF measurement / calibration of TBCDNE - M3
TBCDNE-M2-CAL2	OSL adapters for common mode impedance measurement / calibration of TBCDNE - M2
TBCDNE-M3-CAL2	OSL adapters for common mode impedance measurement / calibration of TBCDNE - M3
TBCDNE-M3-CAL3	OSL adapters for differential mode impedance measurement / calibration of TBCDNE - M2/M3

Self powered active load

For EMC testing, switched mode regulators/power supplies must be terminated with a load. The majority of off-the-shelf active loads feature digital control and hence influence the test result with their own emissions. The **TBOH01** was designed without integrating any digital circuitry and produces no emissions at all. It is supplied with the load voltage.

Operating voltage range: 2V – 70V
Maximum current: 10A
Power rating: max. 25W continuously; higher power requires to add forced cooling
Ranges: 0A – 1A, 0A – 10A, 1Ω – 10Ω, 10Ω – 100Ω
External voltage control input



TBOH01

Wideband injection transformers

The **TBJT01** is a wideband injection transformer for control loop stability measurements. It provides galvanic isolation between the swept signal source and the control loop. The injection transformer is internally terminated with a 5 Ohm resistor and protected with a 100 mA fuse. The usable frequency range of the model **TBJT01** is 10 Hz to 45 MHz. The usable frequency range of the model **TBJT02** is 1 Hz to 7 MHz.
Wideband injection transformers are generally used in conjunction with BODE-analyzers or oscilloscopes with a BODE-analysis option.

Termination resistor: 5 Ω
Fuse: 100 mA (Littlefuse 0451.100MRL); secondary (output) side
Turns ratio: 1:1
Characterized freq. range: 1 Hz to 100 MHz
Usable frequency range: 10 Hz – 45 MHz (TBJT01); 1 Hz -7 MHz (TBJT02)
3 dB frequency range: 15 Hz – 9 MHz typ.(TBJT01); 2 Hz – 3 MHz typ. (TBJT02)
Insertion loss (S21): 15.5 dB typ. (TBJT01); 16 dB typ. (TBJT02)
Capacitance: 90 pF @ 1 Khz (TBJT01); 310pF @ 1kHz (TBJT02); primary to secondary winding
DC saturation current: 12 mA
Max. voltage rating: 600V CAT II; primary to secondary winding
Input connector: 50 Ω BNC female,
Output connector: 4 mm safety banana jacks, 20 mm spacing
Operating temp. range: 0°C – 60°C
Enclosure dimensions: 70 mm x 60 mm x 140 mm
Compliance: RoHS
Weight: 250 g



TBJT01, TBJT02

2-way RF power splitters

RF power splitters are general purpose RF building blocks that are used whenever a signal needs to be split or two signals need to be combined while preserving 50 Ohm impedance on all ports.



Model	TBRFPS1	TBRFPS4
Max. power	2 W	0.5 W
Frequency range	100 kHz - 800 MHz	5 MHz – 3 GHz
S21 above 3 dB	-0.5 dB, midband -	0.6 dB, midband
S31 above 3 dB	-0.6 dB, midband -	0.9 dB, midband
Amplidude unbalance	0.1 dB, midband	0.3 dB, midband
Phase unbalance	0.1 °, midband	0.5 °, midband
Isolation	23 dB, midband	21 dB, midband
SWR Port 1	1.2, midband	2.0, midband
SWR Port 2	1.2, midband	2.0, midband
SWR Port 3	1.2, midband	2.0, midband

50 Ohm RF terminations

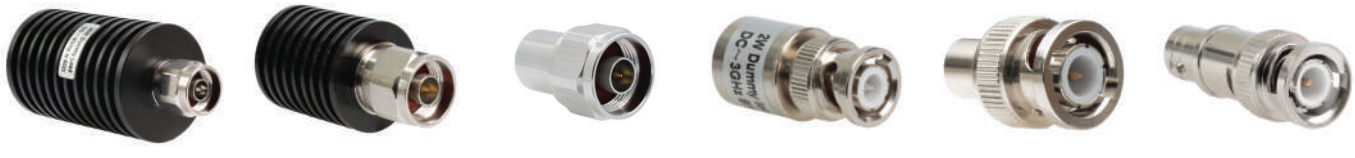

Model	TBTER-25W-3GHz-50-N	TBTER-10W-6GHz-50-N	TBTER-2W-6GHz-50-N	TBTER-2W-2GHz-50-BNCM	TBTER-0.5W-2GHz-BNCM	TBTER-0.5W-1GHz-BNCF/BNCM
RF connector	N-male	N-male	N-male	BNC-male	BNC-male	BNC-male / BNC-female
Frequency range	DC – 3 GHz	DC – 6 GHz	DC – 6 GHz	DC – 2 GHz	DC – 2 GHz	DC – 1 GHz
VSWR	< 1.2	< 1.2	< 1.2	< 1.2	< 1.2	< 1.2
Power rating	25 W	10 W	2 W	2 W	0.5 W	0.5 W



TBCAS1 Coaxial Adapter set TBCAS1 parts

TBCAS1 parts list				
1 pc N-male to N-male	4 pcs N-male to BNC-female	2 pcs N-female to SMA-male	1 pc BNC-female to RCA-male	3 pcs SMA-female to SMA-female
1 pc N-female to N-female	1 pc N-male to BNC-male	1 pc N-female to SMB-female	1 pc BNC-male to SMA-male	3 pcs SMA-male to SMA-male
4 pcs N-male to SMA-female	1 pc N-female to BNC-male	1 pc BNC-male to BNC-male	2 pcs BNC-male to SMA-female	2 pcs SMA-male to SMB-male
2 pcs N-male to SMA-male	1 pc N-female to BNC-female	1 pc BNC-female to BNC-female	1 pc BNC-female to SMA-male	2 pcs SMA-male to SMB-female
2 pcs N-male to SMB-female	2 pcs N-female to SMA-female	1 pc BNC-male to RCA-female	2 pcs BNC-female to SMA-female	2 pcs SMA-female to SMB-female

TBBNC1 BNC Accessory set



TBBNC1 parts list	
1 pc N-male to Banana-male	1 pc N-male to terminal block
1 pc N-male to Banana-female	1 pc N-female to terminal block
1 pc N-female to Banana-male	1 pc BNC-female to BNC-male 50 Ohm feed-though adapter SWR < 1:1.5 @ 1 GHz
1 pc N-female to Banana-female	



Coaxial Cables



Connectors	length	cable	conn. material	Part #
N-Male to N-Male	30 cm	RM141	stainless steel	NM-NM/30/RM141
N-Male to N-Male	35 cm	RG 223/U	nickel plated brass	NM-NM/35/RG223
N-Male to N-Male	50 cm	RM141	stainless steel	NM-NM/50/RM141
N-Male to N-Male	75 cm	RG 58/U	nickel plated brass	NM-NM/75/RG58
N-Male to N-Male	75 cm	RG 223/U	nickel plated brass	NM-NM/75/RG223
N-Male to N-Male	75 cm	RG 142 armored	stainless steel	NM-NM/75/RG142/Test
N-Male to N-Male	1 m	RM141	stainless steel	NM-NM/100/RM141
N-Male to N-Male	1.25 m	RG 223/U	nickel plated brass	NM-NM/125/RG223
N-Male to N-Male	3,12 m	RG 213/U	nickel plated brass	NM-NM/312/RG213
N-Male to N-Male	3 m	RG 142	nickel plated brass	NM-NM/300/RG142
N-Male to N-Male	5 m	RG 223/U	nickel plated brass	NM-NM/500/RG223
N-Male to N-Male	5 m	RG 213/U	nickel plated brass	NM-NM/500/RG213
N-Male to N-Male	10 m	RG 142	nickel plated brass	NM-NM/1000/RG142
N-Male to SMA-Male	30 cm	RM141	stainless steel	NM-SMAM/30/RM141
N-Male to SMA-Male	35 cm	RG 223/U	N: nickel plated brass SMA: gold plated brass	NM-SMAM/35/RG223
N-Male to SMA-Male	50 cm	RM141	stainless steel	NM-SMAM/50/RM141
N-Male to SMA-Male	75 cm	RG 58	N: nickel plated brass SMA: gold plated brass	NM-SMAM/75/RG58
N-Male to SMA-Male	75 cm	RG 223/U	N: nickel plated brass SMA: gold plated brass	NM-SMAM/75/RG223
N-Male to SMA-Male	75 cm	RG 142 armored	stainless steel	NM-SMAM/75/RG142/Test
N-Male to SMA-Male	1 m	RM141	stainless steel	NM-SMAM/100/RM141
N-Male to SMA-Male	1.25 m	RG 223/U	nickel plated brass	NM-SMAM/125/RG223
N-Male to BNC-Male	35 cm	RG 223/U	nickel plated brass	NM-BNCM/35/RG223
N-Male to BNC-Male	75 cm	RG 58/U	nickel plated brass	NM-BNCM/75/RG58
N-Male to BNC-Male	75 cm	RG 223/U	nickel plated brass	NM-BNCM/75/RG223
N-Male to BNC-Male	1.25 m	RG 223/U	nickel plated brass	NM-BNCM/125/RG223
BNC-Male to BNC-Male	35 cm	RG 223/U	nickel plated brass	BNCM-BNCM/35/RG223
BNC-Male to BNC-Male	75 cm	RG 58/U	nickel plated brass	BNCM-BNCM/75/RG58
BNC-Male to BNC-Male	75 cm	RG 223/U	nickel plated brass	BNCM-BNCM/75/RG223
BNC-Male to BNC-Male	1.25 m	RG 223/U	nickel plated brass	BNCM-BNCM/125/RG223
BNC-Male to SMA-Male	35 cm	RG 223/U	BNC: nickel plated brass SMA: gold plated brass	BNCM-SMAM/35/RG223
SMA-Male to SMA-Male	25 cm	RG 316/U	gold plated brass	SMAM-SMAM/25/RG316
SMA-Male to SMA-Male	30 cm	RM141	stainless steel	SMAM-SMAM/30/RM141
SMA-Male to SMA-Male	50 cm	RM141	stainless steel	SMAM-SMAM/50/RM141
SMA-Male to SMA-Male	75 cm	RG 316/U	gold plated brass	SMAM-SMAM/75/RG316
SMA-Male to SMA-Male	75 cm	RG 142 armored	stainless steel	SMAM-SMAM/75/RG142/Test
SMA-Male to SMA-Male	1 m	RM141	stainless steel	SMAM-SMAM/100/RM141
SMA-Male to SMA-Male	1.25 m	RG 223/U	gold plated brass	SMAM-SMAM/125/RG223
SMA-Male to SMB-Female	75 cm	RG 316/U	gold plated brass	SMAM-SMBF/75/RG316

INOX Cable Holders



TBCH1



TBCH2

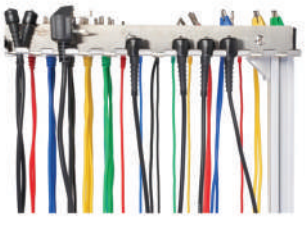

SMA torque wrench



TBTWR-05NM

ESD Target

TBESD1 2Ω ESD calibration target and **TBESD1** 1Ω ESD calibration target in accordance with IEC 61000-4-2, Annex C. A precision 6 GHz 20 dB attenuator, a low loss N-male to SMA-male coaxial cable, a SMA-female to BNC-male coaxial adaptor, and an aluminium carrying box are included with the target.









RF enclosures

Tekbox offers machined aluminium housings and coaxial housings for RF applications. The housings are appropriate for a wide range of RF building blocks, including filters, attenuators, power splitters, mixers, RF amplifiers, and others. All enclosures have matching RF connectors.

TBRFH1 series



Part Numbers: TBRFH1-LL-FFFF-RRRR-A-F

LL: housing profile length

35	35 mm
50	50 mm
100	100 mm

FFFF: front RF connector type

NM	N-male
NF	N-female
SMAM	SMA-male
SMAF	SMA-female
BNCM	BNC-male
BNCF	BNC-Female

RRRR: rear RF connector type

NM	N-male
NF	N-female
SMAM	SMA-male
SMAF	SMA-female
BNCM	BNC-male
BNCF	BNC-Female

A: RF absorber sheet thickness

3	3.2 mm
6	6.4 mm

F: feed-through capacitor

0	without feed-through capacitor
1	with feed through capacitor

Technical data	
Outer cross section	25,6 mm x 25,8 mm
Inner cross section	20,4 mm x 20,6 mm
Housing material	anodized aluminium, exposed aluminium at front and rear side
Standard lengths	35 mm, 50 mm, 100 mm (length of the connector not included); Customisation of the length upon request
RF connector variants	N-Male, N-Female, BNC-Male, BNC-Female, SMA-Male, SMA -Female, any combination of the above connectors; other connectors or flat end plates upon request
RF absorbing foam	carbon loaded, 1 GHz to 18 GHz, adhesive backing; 3.2 mm thickness: -8dB loss @ 10 GHz; 6.4 mm thickness: -21,5 dB loss @ 10 GHz
Feed-through capacitor	10nF / 50V; default centered placement, optional

Parts list	
Front RF connector	1 pc
Rear RF connector	1 pc
Housing half shells, aluminium	2 pcs
Screws, M3 x 10, stainless steel	8 pcs
Sheet metal ground pads	2 pcs
RF absorber foam pad	1 pc
Feed–through capacitor	optional
Flat aluminium end cap	optional

TBRFH2







Technical data	
Diameter	21 mm
Length	58 mm
Max. PCB dimension:	15.5 mm x 13 mm; max. 0.7 mm thickness
Housing material	Brass, nickel plated
RF connectors	N-male, N-female
RF absorbing foam	carbon loaded, 1 GHz to 18 GHz, adhesive backing; 3.2 mm thickness:- 8dB loss @ 10 GHz;
Weight	61 g

Parts list	
RFchassis	1 pc
Threadedcylindricaltube	1 pc
RFabsorberpad	1 pc
Screws,M2x4,stainlesssteel	1 pc

TBRFH7

Technical data	
Diameter	17 mm
Length	62.7 mm
Max. PCB dimension:	15.5 mm x 13.6 mm; max. 1.2 mm thickness
Housing material	Brass, nickel plated
RF connectors	BNC-male, BNC-female
RF absorbing foam	carbon loaded, 1 GHz to 18 GHz, adhesive backing; 3.2 mm thickness:-8dB loss @ 10 GHz;
Weight	60 g

Parts list	
RFchassis	1pc
Threadedcylindricaltube	1pc
RFabsorberpad	1pc
Screws,M2x4,stainlesssteel	1pc





TBRFH3-5527



TBRFH3-5555



TBRFH4



TBRFH5



TBRFH6



Part #	Outerdimensions [mm]	Inner dimensions[mm]	Material	Surface finishing	RF connectors	Detail	Weight[g]
TBRFH3-5527	55 x 27,5 x 21,5	45 x 14,5 x 11,5	Alu A6061	brushed, linear	N-Female	-	130
TBRFH3-5555	55 x 55 x 21,5	45 x 45 x 11,5	Alu A6061	brushed, linear	N-Female	-	185
TBRFH4	48 x 76 x 12	40,2 x 67,7 x 6.5	Alu A6061	sandblasted	SMA-Female	Feed through capacitor,	
TBRFH5	68 x 106 x 32	54 x 98 x 22	Alu A6061	sandblasted	SMA-Female	10nF, 50V Feed through capacitor, 10nF, 50V	380
TBRFH6	50 x 91.4 x 18	39.7 x 84.4 x 9.5	Alu A6061	Sandblasted	SMA-Female	Feed through capacitor, 10nF, 50V	180

Tekbox VSWR Bridges

Tekbox VSWR bridges combine the wide frequency range and directivity of a directional bridge and the low insertion loss and power handling capability of a directional coupler.





TBSWR-60K500



TBSWR-200K500

Model	TBSWR-60K500	TBSWR-200K500
Frequency range	60 kHz - 500 MHz	200 kHz - 500 MHz
Max. power	200 W	100 W
Insertion loss	60 kHz – 200 MHz: < 0.15 dB 200 MHz – 500 MHz: < 0.6 dB	200 kHz – 200 MHz: < 0.3 dB 200 MHz – 500 MHz: < 0.7 dB
Coupling	60 kHz – 100 MHz -50 dB ± 0.7 dB 100 – 500 MHz -50 dB + 0.7/- 10 dB	200 kHz – 300 MHz -40 dB ± 0.3 dB 300 MHz – 500 MHz -40 dB ± 1 dB
Directivity	60 kHz – 500 MHz > 20 dB 150 kHz – 300 MHz > 25 dB 200 kHz – 30 MHz > 30 dB	200 kHz – 500 MHz > 20 dB 800 kHz – 50 MHz > 30 dB
Application	Immunity test setups General purpose	Immunity test setups General purpose
Standard accessories	Wooden box 2 pcs SMA 50 Ohm terminations	Wooden box 2 pcs SMA 50 Ohm terminations





TBSWR-600K700



TBSWR-300K6000

Model	TBSWR-600K700	TBSWR-300K6000
Frequency range	600 kHz – 700 MHz	300 kHz – 6 GHz
Max. power	50 W	4 W
Insertion loss	200 kHz – 100 MHz: < 0.7 dB 100 MHz – 700 MHz: < 1.5 dB	300 kHz – 1 GHz: < 1.8 dB 1 GHz – 6 GHz: < 2.6 dB
Coupling	300 kHz – 700 MHz -30 dB ± 0.5 dB	300 kHz – 3 GHz -20 dB ± 1 dB 3GHz – 6 GHz -19 dB + 0.5/- 3 dB
Directivity	600 kHz – 700 MHz > 20 dB 10 MHz – 500 MHz > 30 dB	300 kHz – 700 kHz > 25 dB 700 kHz – 5 GHz > 30 dB 5 GHz – 6 GHz > 20 dB
Application	Immunity test setups General purpose	General purpose
Standard accessories	Wooden box 2 pcs SMA 50 Ohm terminations	Wooden box

EMC VIEW

OVERVIEW

The Tekbox EMC compliance software EMCview for PCs is a user-friendly EMC pre-compliance testing of radiated and conducted emissions. It is a perfect complement for automated testing using our LISNs, RF current probes, measurement antennas and TEM Cells.

A built-in amplitude correction enables correction and conversion coefficients for cables, amplifiers, attenuators, LISNs, TEM cells, antennas, RF current probes, filters and any other component in the signal chain.

There is no need for a time-consuming setup. The SW is ready for measurements straight after installation. All emission related standards and a few automotive manufacturer standards are pre-configured in corresponding project files. The project files take care of all necessary settings to conduct standard compliant measurements. Besides using pre-configured projects, the user can easily create his own projects using a built in editor or any simple text editor.

The graph supports two complete measurement runs such as for example Average / Quasi-Peak or Peak / Quasi Peak and in addition a fast Quasi-Peak scan of critical peaks. Graphs can be saved and overlaid with newer measurements to track and document design modifications.

Furthermore, EMCview together with our GPS receiver can be used to carry out RF-coverage measurements. An export feature creates KML files which link the result to google maps.
Immunity testing is supported with dedicated menus, controlling the tracking generator of the spectrum analyzer.

EMCview currently supports the following spectrum analyzers

Rigol (DSA and RSA)
Siglent (SSA/SSA plus/SSA -R and SVA)
R&S (FPC and FPH)
OWON XSA and HAS
TheEMCShop ESA series
BK Precision 2683 series
Teledyne Test Tools T3SA series
ComPower SPA-900TG series
Multicomp MP700xyz series
UNI-T UTS series

The spectrum analyzer must be equipped with the EMI option

Tekbox offers two license options:
+ Analyzer-coupled – the license is coupled to the serial number of the spectrum analyzer. It can be installed on any number of PCs, but it can only control one dedicated spectrum analyzer
+ PC-coupled: the license is coupled to the Host ID of the PC. It can control any of the supported spectrum analyzer models, but it can only be installed on one dedicated PC.
NOTE: Software limitation without a license: the measurement is limited to the frequency range below 10MHz

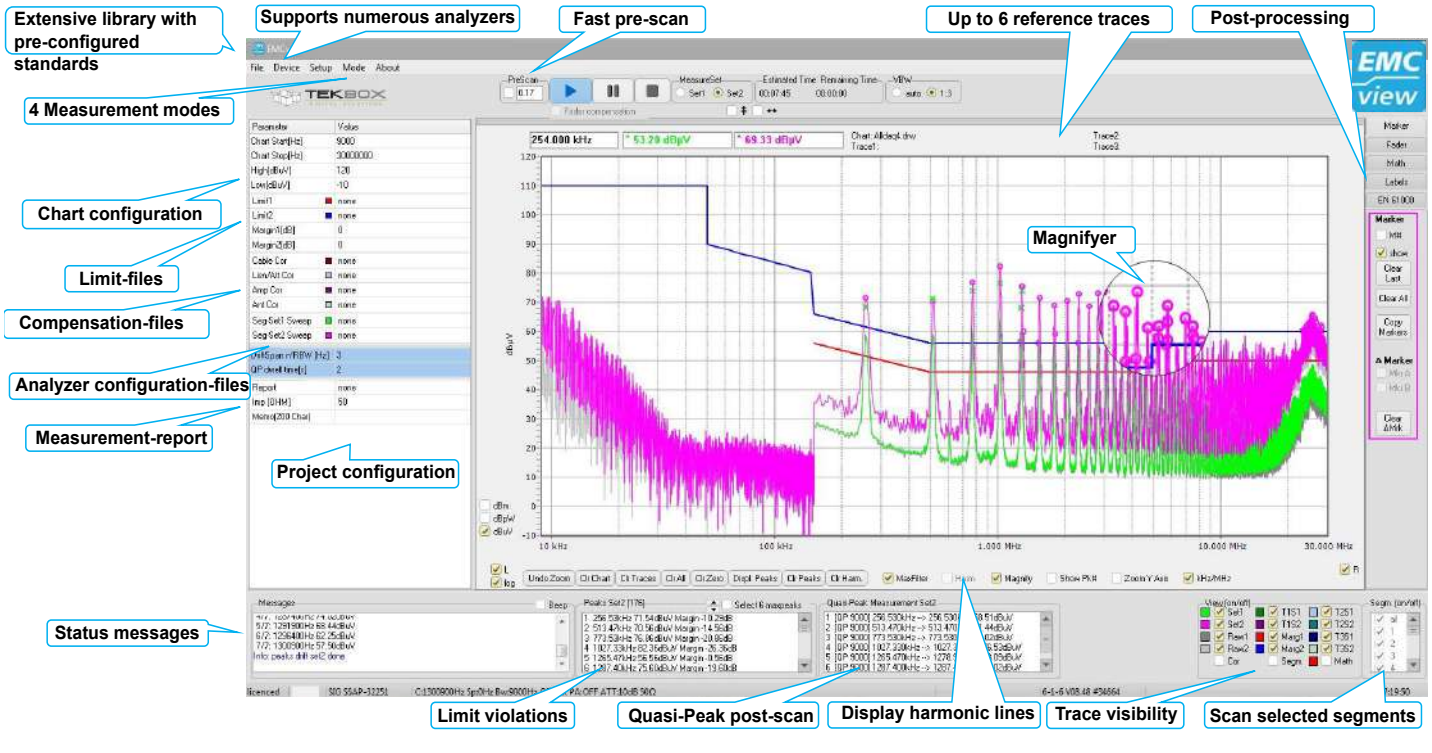

FEATURES

- Numerous pre-configured project files for all relevant EMC standards
- Graph supports two complete measurement runs, same as in test house; simultaneous measurement with two detectors available for a few analyzers
- fast Quasi-Peak scan of critical peaks, immune to frequency drift of the selected peaks
- Fast pre-scan
- Configurable limit lines and segment files
- Configurable correction files for cables, LISN, amplifiers, antennas, current probes, etc.
- Configurable margins for the identification and selection of critical peaks
- Supports import and overlaying of reference measurements for comparison purpose
- Linear or logarithmic frequency axis
- Harmonic markers
- Automatic creation of test reports
- Many import/export-functions
- Graphs can be saved as charts containing meta-data, graphs can be loaded together with the corresponding measurement configuration
- RF coverage measurements
- Tracking generator control for immunity testing using TEM cells
- Many post-processing features
- Useful calculators
- Immunity testing using CDNs or BCI probes; requires EMCview PRO license
- Rapid measurement, supporting real time bandwidth capability of Siglent SSA3000X-R series and Rigol RSA series; requires EMCview PRO license

IMPLEMENTED STANDARDS

Implemented Standards	Description
CISPR 16 / EN 55016	Base standard used by EMCview for control and settings of the spectrum analyzers during measurement
CISPR 11 / EN 55011	Industrial, scientific and medical equipment - Radio-frequency disturbance characteristics – Limits and methods of measurement
CISPR 12 / EN 55012	Vehicles, boats and internal combustion engines - Radio disturbance characteristics - Limits and methods of measurement for the protection of off-board receivers
CISPR 13 / EN 55013	Sound and television broadcast receivers and associated equipment -Radio disturbance characteristics - Limits and methods of measurement; replaced by CISPR 32
CISPR 14 / EN 55014	Electromagnetic compatibility - Requirements for household appliances, electric tools and similar apparatus
CISPR 15 / EN 55015	Limits and methods of measurement of radio disturbance characteristics of electrical lighting and similar equipment
CISPR 22 / EN 55022	Information technology equipment – Radio disturbance characteristics – Limits and methods of measurement; replaced by CISPR 32
CISPR 25 / EN 55025	Vehicles, boats and internal combustion engines - Radio disturbance characteristics - Limits and methods of measurement for the protection of on-board receivers
CISPR 32 / EN 55032	Electromagnetic compatibility of multimedia equipment - Emission requirements
CISPR 36 / EN 55036	Electric and hybrid electric road vehicles - Radio disturbance characteristics - Limits and methods of measurement for the protection of off-board receivers below 30 MHz
EN 50121-2	Emission of the whole railway system to the outside world
EN 50121-3-1	Emission and immunity requirements for all types of rolling stock
EN 50121-3-2	EMC for electrical and electronic apparatus intended for use on railway
IEC / EN 61000-6-3	Generic EMC emission standard applicable only if no relevant dedicated product EMC standard has been published; residential environments
IEC / EN 61000-6-4	Generic EMC emission standard applicable only if no relevant dedicated product EMC standard has been published; industrial environments
IEC / EN 300330	Short Range Devices; Radio equipment in the frequency range 9 kHz - 25 MHz and inductive loop systems in the frequency range 9 kHz - 30 MHz
IEC / EN 60945	Maritime navigation and radiocommunication equipment and systems
EN 15194	Electrically power assisted cycles
MIL-STD-461G	United States Military standard for electromagnetic compatibility
FCC15 Subpart B	FCC emission limits for two major classes of unintentional radiators
IEC / EN 61000-4-6	Immunity to conducted disturbances, induced by radio-frequency fields; used for immunity feature in EMCview PRO
ISO 11452-4	Road vehicles - Component test methods for electrical disturbances from narrowband radiated electromagnetic energy; used for immunity feature in EMCview PRO
IEC / EN 61000-4-20	Emission and immunity testing in transverse electromagnetic (TEM) waveguides; used for Near-field to far-field correlation feature in EMCview

Various car manufacturer specific standards have been partially implemented. These standards will be updated and additional manufacturer standards will be introduced in future releases of EMCview

APPLICATION

- In house measurement of EMC behavior during product design phase
- EMC training in lab, school and university
- Pre-compliance test of products before submitting it to the test house
- Test-cost reduction
- Reduced time to market

Conducted emission testing using LISN

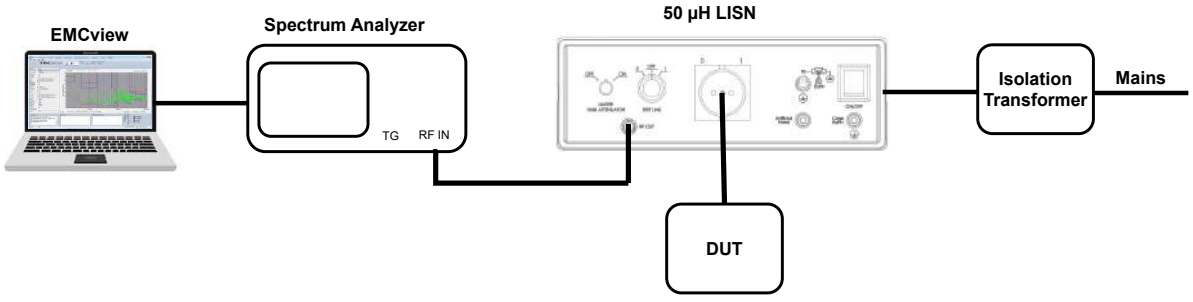

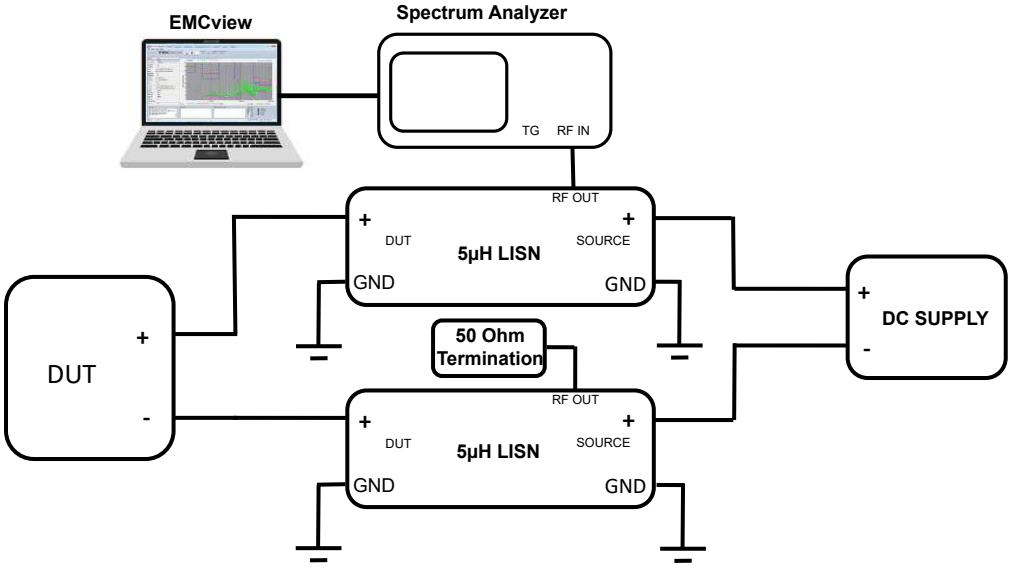

Conducted emission testing using a RF current monitoring Probe

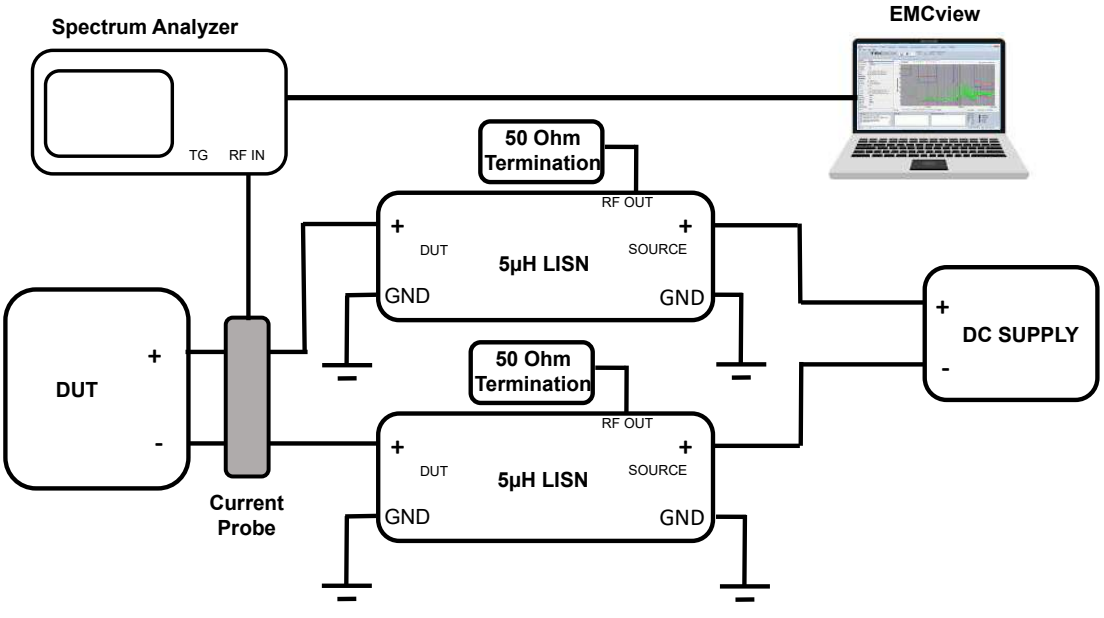

Radiated emission testing using a measurement antenna

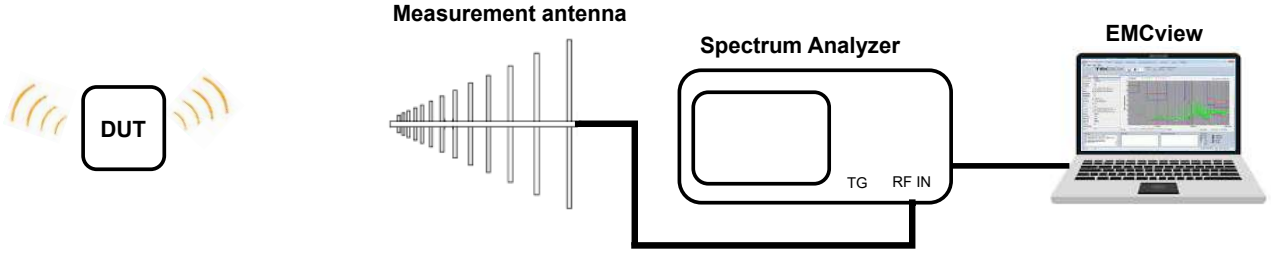

Radiated emission testing using a TEM-cell

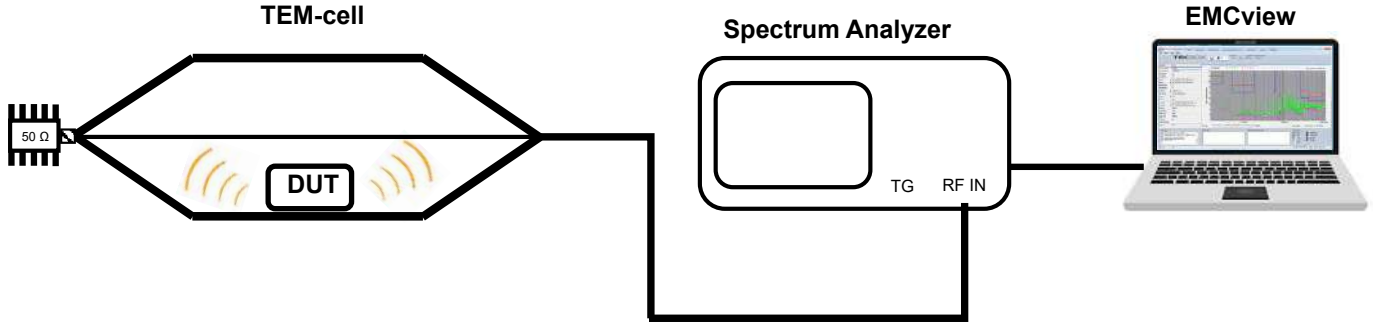

Immunity testing using a TEM-cell

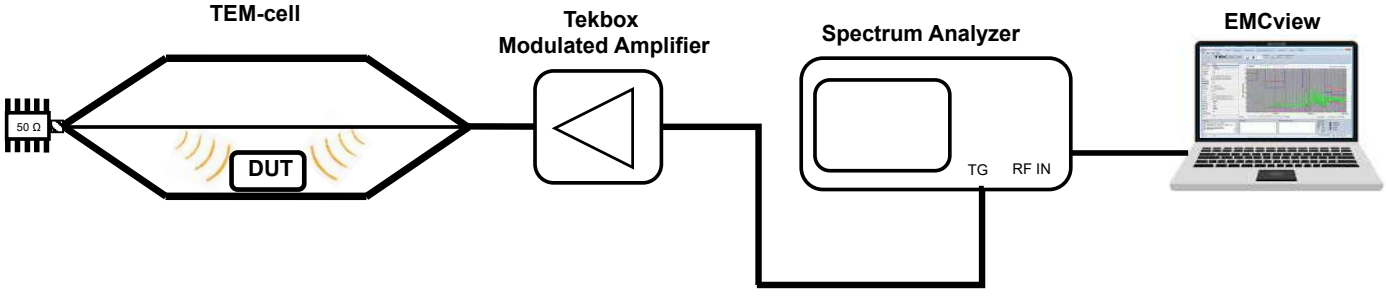

Immunity testing using near field probes

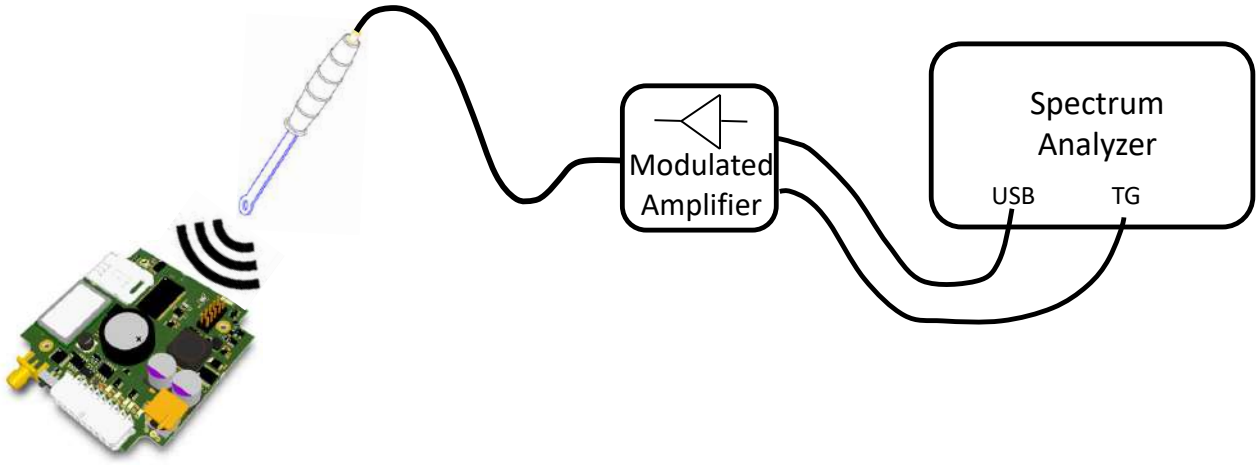

EN 61000-4-6 calibration set up using EMCview PRO

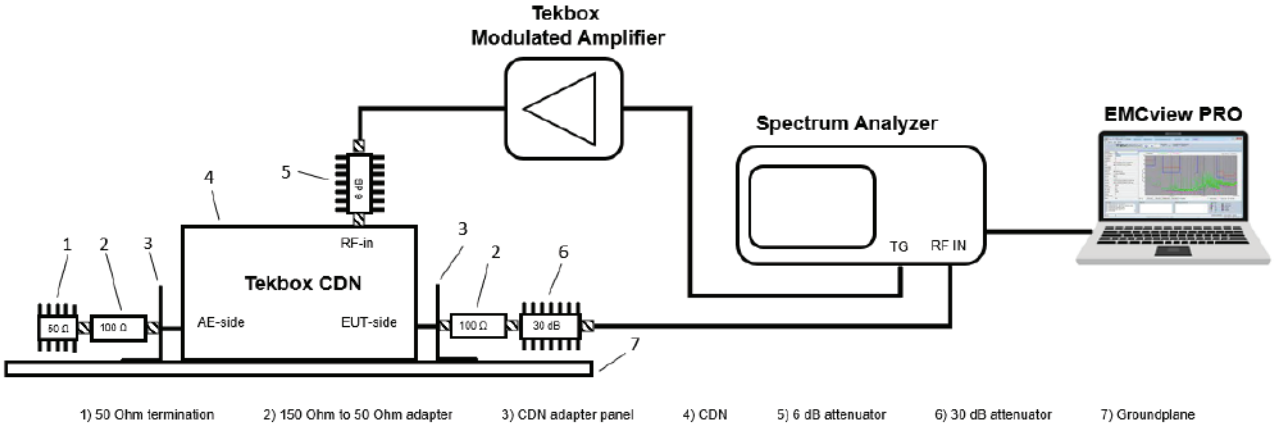

EN 61000-4-6 immunity test set up using EMCview PRO

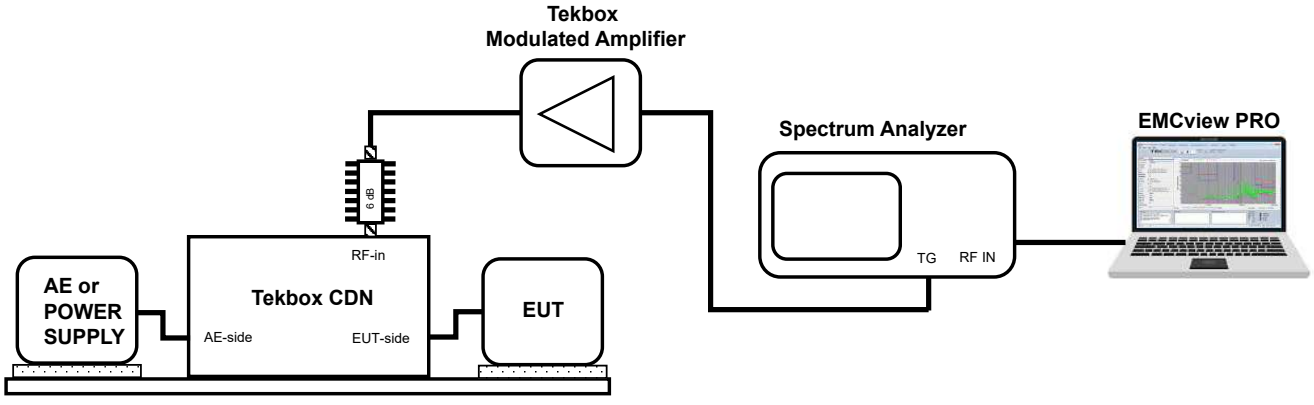

EN 61000-4-6 300 Ohm loop BCI calibration set up using EMCview PRO

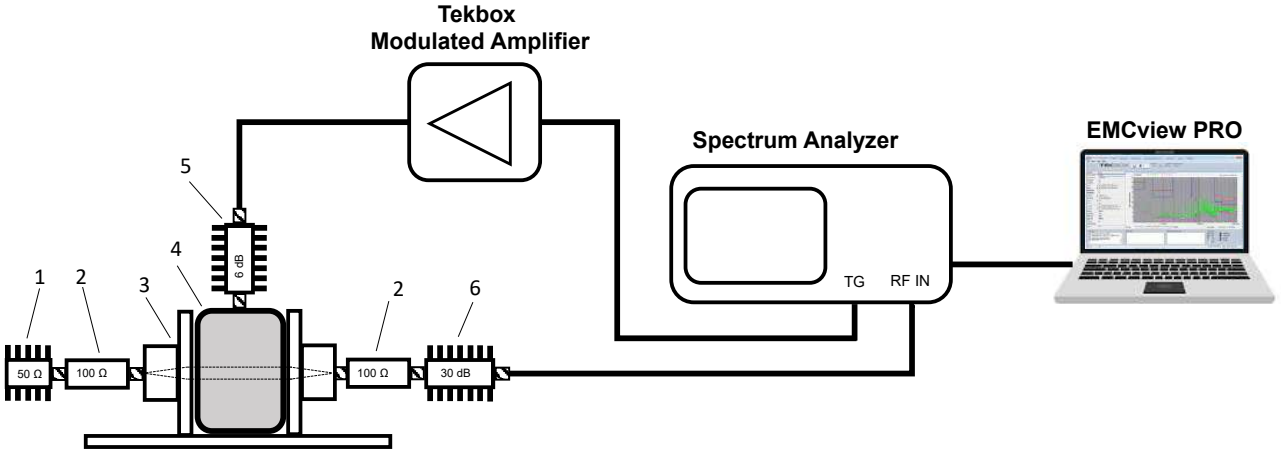

1) 50 Ohm termination 2) 150 Ohm to 50 Ohm adapter 3) BCI probe calibration fixture 4) BCI probe 5) 6 dB attenuator 6) 30 dB attenuator

EN 61000-4-6 immunity test set up using a BCI probe using EMCview PRO

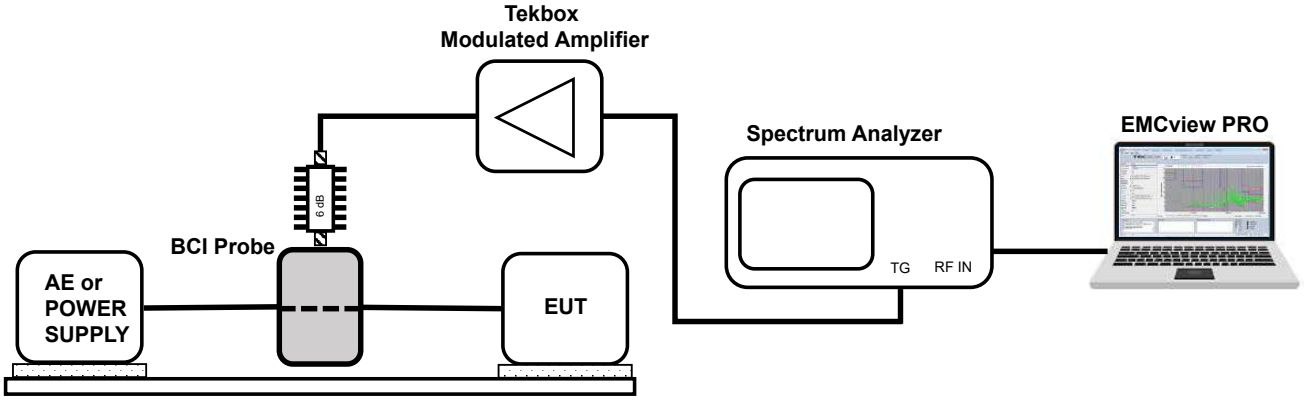

ISO 11452-4 Conducted immunity measurement using EMCview PRO

Substitution method, calibration, step 1

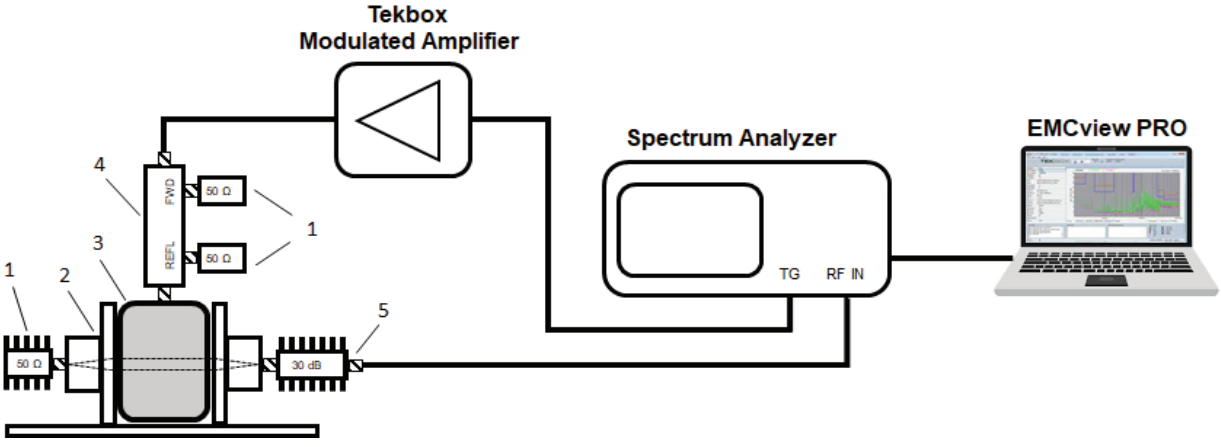

Substitution method, calibration, step 2

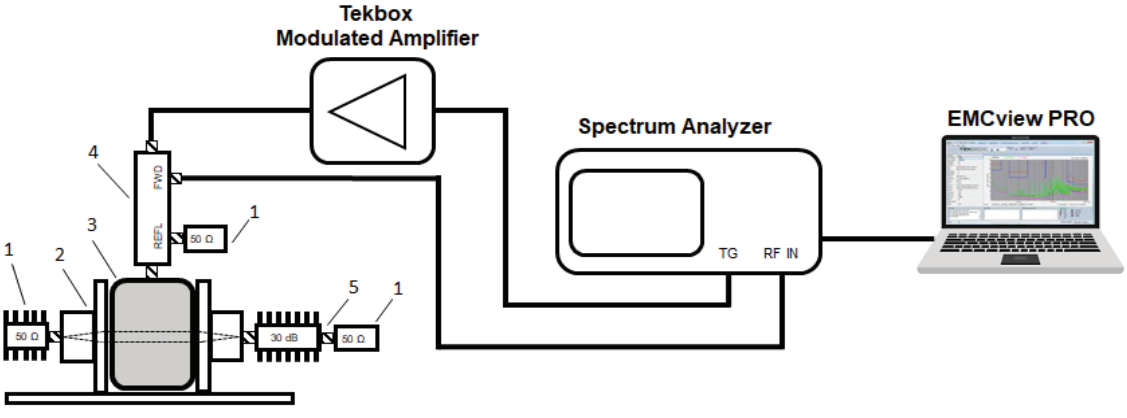

1) 50 Ohm terminations 2) BCI probe calibration fixture 3) BCI probe 4) directional coupler 5) 30 dB attenuator

Substitution method, immunity test

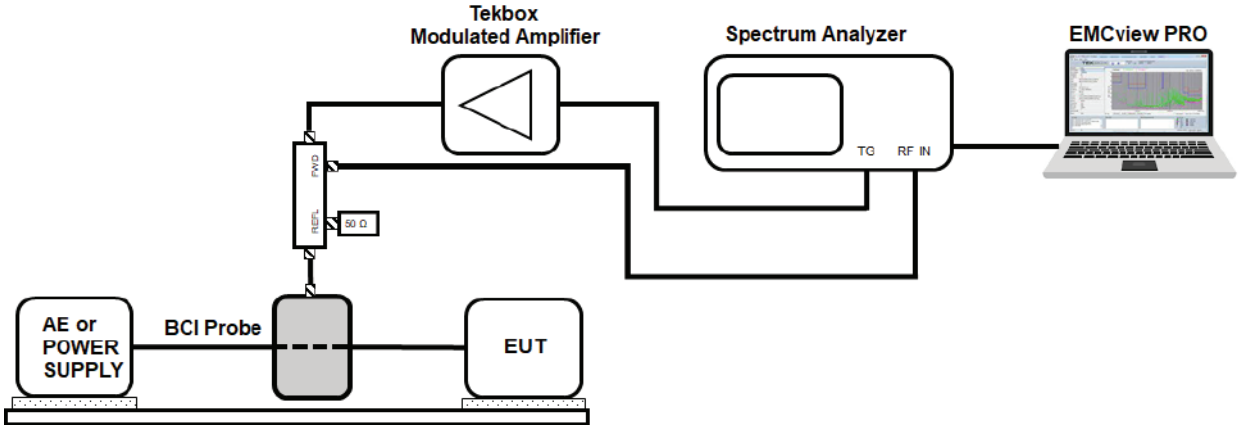

ISO 11452-4 Conducted immunity test using EMCview PRO Open Loop Method

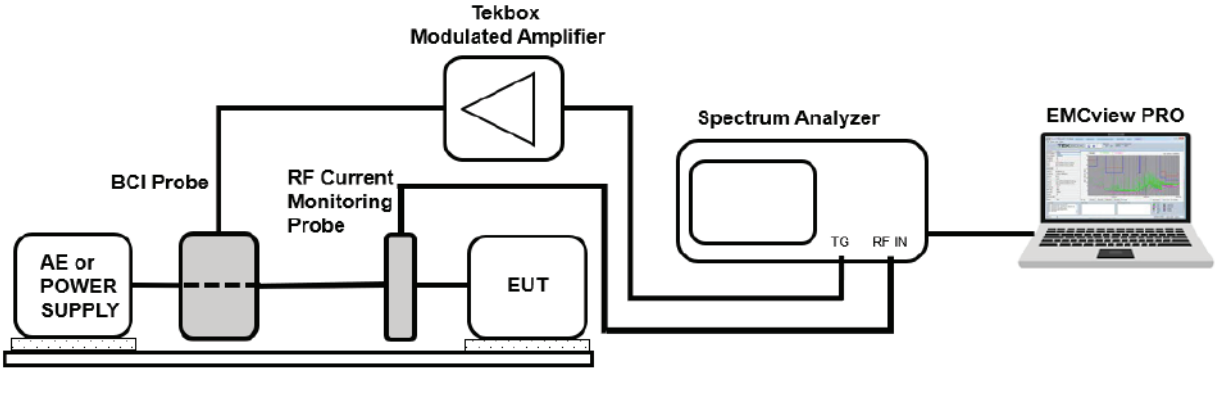



TEKBOX
DIGITAL SOLUTIONS

L'IMPULSION électronique

48 rue Antoine de LAVOISIER - B.P. 45 - Z.I de la Sphère
14202 HEROUVILLE SAINT CLAIR cedex
Tél. 02 31 47 53 88 ▪ Fax : 02 31 47 36 80
contact@limpulsion.fr

www.limpulsion.fr

▲ vente de composants - mesure - outillage - bureau d'études